Earth System Modeling Framework

ESMF Reference Manual for Fortran

Version 9.0.0 beta snapshot

ESMF Joint Specification Team: V. Balaji, Byron Boville, Samson Cheung, Tom Clune, Nancy Collins, Tony Craig, Carlos Cruz, Arlindo da Silva, Cecelia DeLuca, Rosalinda de Fainchtein, Rocky Dunlap, Brian Eaton, Steve Goldhaber, Bob Hallberg, Tom Henderson, Chris Hill, Mark Iredell, Joseph Jacob, Rob Jacob, Phil Jones, Brian Kauffman, Erik Kluzek, Ben Koziol, Jay Larson, Peggy Li, Fei Liu, John Michalakes, Raffaele Montuoro, Sylvia Murphy, David Neckels, Ryan O Kuinghttons, Bob Oehmke, Chuck Panaccione, Daniel Rosen, Jim Rosinski, Mathew Rothstein, Bill Sacks, Kathy Saint, Will Sawyer, Earl Schwab, Shepard Smithline, Walter Spector, Don Stark, Max Suarez, Spencer Swift, Gerhard Theurich, Atanas Trayanov, Silverio Vasquez, Jon Wolfe, Weiyu Yang, Mike Young, Leonid Zaslavsky

August 29, 2025

http://www.earthsystemmodeling.org

Acknowledgements

The ESMF software is based on the contributions of a broad community. Below are the software packages that are included in ESMF or strongly influenced our design. We'd like to express our gratitude to the developers of these codes for access to their software as well as their ideas and advice.

- Parallel I/O (PIO) developers at NCAR and DOE Laboratories for their excellent work on this package and their help in making it work with ESMF
- The Spherical Coordinate Remapping and Interpolation Package (SCRIP) from Los Alamos, which informed the design of our regridding functionality
- The Model Coupling Toolkit (MCT) from Argonne National Laboratory, on which we based our sparse matrix multiply approach to general regridding
- The Inpack configuration attributes package from NASA Goddard, which was adapted for use in ESMF by members of NASA Global Modeling and Assimilation group
- The Flexible Modeling System (FMS) package from GFDL and the Goddard Earth Modeling System (GEMS) from NASA Goddard, both of which provided inspiration for the overall ESMF architecture
- The Common Component Architecture (CCA) effort within the Department of Energy, from which we drew many ideas about how to design components
- The Vector Signal Image Processing Library (VSIPL) and its predecessors, which informed many aspects of our design, and the radar system software design group at Lincoln Laboratory
- The Portable, Extensible Toolkit for Scientific Computation (PETSc) package from Argonne National Laboratories, on which we based our initial makefile system
- The Community Climate System Model (CCSM) and Weather Research and Forecasting (WRF) modeling groups at NCAR, who have provided valuable feedback on the design and implementation of the framework

Contents

I ESMF Overview **34**

1 What is the Earth System Modeling Framework? **35**

2 The ESMF Reference Manual for Fortran **35**

3 How to Contact User Support and Find Additional Information **36**

4 How to Submit Comments, Bug Reports, and Feature Requests **36**

5 Conventions **37**
5.1 Typeface and Diagram Conventions . . . 37
5.2 Method Name and Argument Conventions . . . 37

6 The ESMF Application Programming Interface **38**
6.1 Standard Methods and Interface Rules . . . 38
6.2 Deep and Shallow Classes . . . 38
6.3 Aliases and Named Aliases . . . 39
6.3.1 ESMF_NamedAlias . . . 40
6.4 Special Methods . . . 40
6.5 The ESMF Data Hierarchy . . . 41
6.6 ESMF Spatial Classes . . . 41
6.7 ESMF Maps . . . 42
6.8 ESMF Specification Classes . . . 42
6.9 ESMF Utility Classes . . . 43

7 Integrating ESMF into Applications **43**
7.1 Using the ESMF Superstructure . . . 43

8 Overall Rules and Behavior **44**
8.1 Return Code Handling . . . 44
8.2 Local and Global Views and Associated Conventions . . . 44
8.3 Allocation Rules . . . 45
8.4 Assignment, Equality, Copying and Comparing Objects . . . 45
8.5 Attributes . . . 45
8.6 Constants . . . 45

9 Overall Design and Implementation Notes **46**

10 Overall Restrictions and Future Work **46**

II Command Line Tools **47**

11 ESMF_PrintInfo **47**
11.1 Description . . . 47

12 ESMF_RegridWeightGen **47**
12.1 Description . . . 47
12.2 Regridding Options . . . 49

12.2.1 Poles . . . 49
12.2.2 Masking . . . 50
12.2.3 Extrapolation . . . 50
12.2.4 Unmapped destination points . . . 50
12.2.5 Line type . . . 50
12.3 Regridding Methods . . . 51
12.3.1 Bilinear . . . 51
12.3.2 Patch . . . 51
12.3.3 Nearest neighbor . . . 51
12.3.4 First-order conservative . . . 52
12.3.5 Second-order conservative . . . 52
12.4 Conservation . . . 52
12.5 The effect of normalization options on integrals and values produced by conservative methods . . . 53
12.6 Usage . . . 54
12.7 Examples . . . 60
12.8 Grid File Formats . . . 61
12.8.1 SCRIP Grid File Format . . . 61
12.8.2 ESMF Unstructured Grid File Format (ESMFMESH) . . . 63
12.8.3 CF Convention Single Tile File Format (CFGRID/GRIDSPEC) . . . 66
12.8.4 CF Convention UGRID File Format . . . 68
12.8.5 GRIDSPEC Mosaic File Format . . . 71
12.9 Regrid Weight File Format . . . 74
12.9.1 Source Grid Description . . . 75
12.9.2 Destination Grid Description . . . 76
12.9.3 Regrid Calculation Output . . . 76
12.9.4 Weight File Description Attributes . . . 77
12.9.5 Weight Only Weight File . . . 78
12.10 ESMF_RegridWeightGenCheck . . . 78

13 ESMF_Regrid **78**
13.1 Description . . . 78
13.2 Usage . . . 82
13.3 Examples . . . 85

14 ESMF_Scrip2Unstruct **86**
14.1 Description . . . 86

III Superstructure **88**

15 Overview of Superstructure **89**
15.1 Superstructure Classes . . . 89
15.2 Hierarchical Creation of Components . . . 90
15.3 Sequential and Concurrent Execution of Components . . . 91
15.4 Intra-Component Communication . . . 92
15.5 Data Distribution and Scoping in Components . . . 92
15.6 Performance . . . 92
15.7 Object Model . . . 96

16 Application Driver and Required ESMF Methods **96**
16.1 Description . . . 96
16.2 Constants . . . 97

16.2.1 ESMF_END . . . 97
16.3 Use and Examples . . . 98
16.4 Required ESMF Methods . . . 102
16.4.1 ESMF_Initialize . . . 103
16.4.2 ESMF_InitializePreMPI . . . 107
16.4.3 ESMF_IsInitialized . . . 108
16.4.4 ESMF_IsFinalized . . . 108
16.4.5 ESMF_Finalize . . . 109
16.4.6 User-code `SetServices` method . . . 110
16.4.7 User-code `Initialize`, `Run`, and `Finalize` methods . . . 111
16.4.8 User-code `SetVM` method . . . 111
16.4.9 Use of `internal procedures` as user-provided procedures . . . 112

17 GridComp Class **113**
17.1 Description . . . 113
17.2 Use and Examples . . . 114
17.2.1 Implement a user-code `SetServices` routine . . . 114
17.2.2 Implement a user-code `Initialize` routine . . . 115
17.2.3 Implement a user-code `Run` routine . . . 116
17.2.4 Implement a user-code `Finalize` routine . . . 116
17.2.5 Implement a user-code `SetVM` routine . . . 117
17.3 Restrictions and Future Work . . . 118
17.4 Class API . . . 118
17.4.1 ESMF_GridCompAssignment(=) . . . 118
17.4.2 ESMF_GridCompOperator(==) . . . 118
17.4.3 ESMF_GridCompOperator(/=) . . . 119
17.4.4 ESMF_GridCompCreate . . . 120
17.4.5 ESMF_GridCompDestroy . . . 123
17.4.6 ESMF_GridCompFinalize . . . 124
17.4.7 ESMF_GridCompGet . . . 125
17.4.8 ESMF_GridCompGetInternalState . . . 128
17.4.9 ESMF_GridCompInitialize . . . 129
17.4.10 ESMF_GridCompIsCreated . . . 131
17.4.11 ESMF_GridCompIsPetLocal . . . 131
17.4.12 ESMF_GridCompPrint . . . 132
17.4.13 ESMF_GridCompReadRestart . . . 133
17.4.14 ESMF_GridCompRun . . . 134
17.4.15 ESMF_GridCompServiceLoop . . . 136
17.4.16 ESMF_GridCompSet . . . 137
17.4.17 ESMF_GridCompSetEntryPoint . . . 139
17.4.18 ESMF_GridCompSetInternalState . . . 140
17.4.19 ESMF_GridCompSetServices . . . 141
17.4.20 ESMF_GridCompSetServices . . . 142
17.4.21 ESMF_GridCompSetServices . . . 143
17.4.22 ESMF_GridCompSetServices . . . 144
17.4.23 ESMF_GridCompSetVM . . . 145
17.4.24 ESMF_GridCompSetVM . . . 146
17.4.25 ESMF_GridCompSetVMMaxPEs . . . 147
17.4.26 ESMF_GridCompSetVMMaxThreads . . . 149
17.4.27 ESMF_GridCompSetVMMinThreads . . . 150
17.4.28 ESMF_GridCompSetVMStdRedirect . . . 151

17.4.29 ESMF_GridCompValidate . . . 152
17.4.30 ESMF_GridCompWait . . . 153
17.4.31 ESMF_GridCompWriteRestart . . . 154

18 CplComp Class **155**
18.1 Description . . . 155
18.2 Use and Examples . . . 156
18.2.1 Implement a user-code `SetServices` routine . . . 156
18.2.2 Implement a user-code `Initialize` routine . . . 157
18.2.3 Implement a user-code `Run` routine . . . 157
18.2.4 Implement a user-code `Finalize` routine . . . 158
18.2.5 Implement a user-code `SetVM` routine . . . 159
18.3 Restrictions and Future Work . . . 159
18.4 Class API . . . 160
18.4.1 ESMF_CplCompAssignment(=) . . . 160
18.4.2 ESMF_CplCompOperator(==) . . . 160
18.4.3 ESMF_CplCompOperator(/=) . . . 161
18.4.4 ESMF_CplCompCreate . . . 162
18.4.5 ESMF_CplCompDestroy . . . 163
18.4.6 ESMF_CplCompFinalize . . . 164
18.4.7 ESMF_CplCompGet . . . 166
18.4.8 ESMF_CplCompGetInternalState . . . 167
18.4.9 ESMF_CplCompInitialize . . . 168
18.4.10 ESMF_CplCompIsCreated . . . 170
18.4.11 ESMF_CplCompIsPetLocal . . . 170
18.4.12 ESMF_CplCompPrint . . . 171
18.4.13 ESMF_CplCompReadRestart . . . 172
18.4.14 ESMF_CplCompRun . . . 173
18.4.15 ESMF_CplCompServiceLoop . . . 175
18.4.16 ESMF_CplCompSet . . . 176
18.4.17 ESMF_CplCompSetEntryPoint . . . 177
18.4.18 ESMF_CplCompSetInternalState . . . 178
18.4.19 ESMF_CplCompSetServices . . . 179
18.4.20 ESMF_CplCompSetServices . . . 180
18.4.21 ESMF_CplCompSetServices . . . 181
18.4.22 ESMF_CplCompSetServices . . . 182
18.4.23 ESMF_CplCompSetVM . . . 183
18.4.24 ESMF_CplCompSetVM . . . 184
18.4.25 ESMF_CplCompSetVMMaxPEs . . . 185
18.4.26 ESMF_CplCompSetVMMaxThreads . . . 186
18.4.27 ESMF_CplCompSetVMMinThreads . . . 188
18.4.28 ESMF_CplCompSetVMStdRedirect . . . 189
18.4.29 ESMF_CplCompValidate . . . 190
18.4.30 ESMF_CplCompWait . . . 190
18.4.31 ESMF_CplCompWriteRestart . . . 191

19 SciComp Class **193**
19.1 Description . . . 193
19.2 Use and Examples . . . 193
19.2.1 Use ESMF_SciComp and Attach Attributes . . . 193
19.3 Restrictions and Future Work . . . 197

19.4 Class API . . . 197
19.4.1 ESMF_SciCompAssignment(=) . . . 197
19.4.2 ESMF_SciCompOperator(==) . . . 198
19.4.3 ESMF_SciCompOperator(/=) . . . 198
19.4.4 ESMF_SciCompCreate . . . 199
19.4.5 ESMF_SciCompDestroy . . . 199
19.4.6 ESMF_SciCompGet . . . 200
19.4.7 ESMF_SciCompIsCreated . . . 200
19.4.8 ESMF_SciCompPrint . . . 201
19.4.9 ESMF_SciCompSet . . . 202
19.4.10 ESMF_SciCompValidate . . . 202

20 Fault-tolerant Component Tunnel 203
20.1 Description . . . 203
20.2 Use and Examples . . . 203
20.2.1 Creating an *actual* Component . . . 203
20.2.2 Creating a *dual* Component . . . 203
20.2.3 Setting up the *actual* side of a Component Tunnel . . . 204
20.2.4 Setting up the *dual* side of a Component Tunnel . . . 205
20.2.5 Invoking standard Component methods through a Component Tunnel . . . 205
20.2.6 The non-blocking option to invoke standard Component methods through a Component Tunnel 205
20.2.7 Destroying a connected *dual* Component . . . 207
20.2.8 Destroying a connected *actual* Component . . . 207
20.3 Restrictions and Future Work . . . 207

21 State Class 207
21.1 Description . . . 207
21.2 Constants . . . 208
21.2.1 ESMF_STATEINTENT . . . 208
21.2.2 ESMF_STATEITEM . . . 208
21.3 Use and Examples . . . 209
21.3.1 Create a State and add items . . . 209
21.3.2 Query a State for items and add more items . . . 210
21.3.3 Removing items from a State . . . 210
21.3.4 Destroy a State . . . 210
21.3.5 Reconcile a State . . . 211
21.4 Restrictions and Future Work . . . 213
21.5 Design and Implementation Notes . . . 213
21.6 Object Model . . . 216
21.7 Class API . . . 216
21.7.1 ESMF_StateAssignment(=) . . . 216
21.7.2 ESMF_StateOperator(==) . . . 217
21.7.3 ESMF_StateOperator(/=) . . . 217
21.7.4 ESMF_StateAdd . . . 218
21.7.5 ESMF_StateAddReplace . . . 219
21.7.6 ESMF_StateCreate . . . 220
21.7.7 ESMF_StateDestroy . . . 221
21.7.8 ESMF_StateGet . . . 222
21.7.9 ESMF_StateGet . . . 224
21.7.10 ESMF_StateGet . . . 225
21.7.11 ESMF_StateIsCreated . . . 226

21.7.12 ESMF_StateLog . . . 226
21.7.13 ESMF_StatePrint . . . 227
21.7.14 ESMF_StateReconcile . . . 227
21.7.15 ESMF_StateRemove . . . 228
21.7.16 ESMF_StateRemove . . . 229
21.7.17 ESMF_StateReplace . . . 230
21.7.18 ESMF_StateSet . . . 231
21.7.19 ESMF_StateValidate . . . 232

22 Internal State **232**
22.1 Description . . . 232
22.2 Use and Examples . . . 232
22.2.1 Add and Get the Internal State . . . 232
22.2.2 Add and Get Internal State with label . . . 234
22.3 Restrictions and Future Work . . . 235
22.4 Class API . . . 236
22.4.1 ESMF_InternalStateAdd . . . 236
22.4.2 ESMF_InternalStateAdd . . . 236
22.4.3 ESMF_InternalStateGet . . . 237
22.4.4 ESMF_InternalStateGet . . . 238
22.4.5 ESMF_InternalStateGet . . . 238
22.4.6 ESMF_InternalStateGet . . . 239

23 Attachable Methods **239**
23.1 Description . . . 239
23.2 Use and Examples . . . 240
23.2.1 Producer Component attaches user defined method . . . 240
23.2.2 Producer Component implements user defined method . . . 240
23.2.3 Consumer Component executes user defined method . . . 240
23.3 Restrictions and Future Work . . . 241
23.4 Class API . . . 241
23.4.1 ESMF_MethodAdd . . . 241
23.4.2 ESMF_MethodAdd . . . 242
23.4.3 ESMF_MethodAdd . . . 243
23.4.4 ESMF_MethodAdd . . . 244
23.4.5 ESMF_MethodAdd . . . 245
23.4.6 ESMF_MethodAdd . . . 246
23.4.7 ESMF_MethodAddReplace . . . 247
23.4.8 ESMF_MethodAddReplace . . . 248
23.4.9 ESMF_MethodAddReplace . . . 248
23.4.10 ESMF_MethodAddReplace . . . 249
23.4.11 ESMF_MethodAddReplace . . . 250
23.4.12 ESMF_MethodAddReplace . . . 251
23.4.13 ESMF_MethodExecute . . . 252
23.4.14 ESMF_MethodExecute . . . 253
23.4.15 ESMF_MethodExecute . . . 253
23.4.16 ESMF_MethodGet . . . 254
23.4.17 ESMF_MethodGet . . . 255
23.4.18 ESMF_MethodGet . . . 255
23.4.19 ESMF_MethodGet . . . 256
23.4.20 ESMF_MethodGet . . . 257

23.4.21 ESMF_MethodGet . . . 257
23.4.22 ESMF_MethodRemove . . . 258
23.4.23 ESMF_MethodRemove . . . 258
23.4.24 ESMF_MethodRemove . . . 259

24 Web Services **260**
24.1 Description . . . 260
24.1.1 Creating a Service around a Component . . . 261
24.1.2 Code Modifications . . . 261
24.1.3 Accessing the Service . . . 261
24.1.4 Client Application via C++ API . . . 261
24.1.5 Process Controller . . . 262
24.1.6 Tomcat/Axis2 . . . 262
24.2 Use and Examples . . . 262
24.2.1 Making a Component available through ESMF Web Services . . . 262
24.3 Restrictions and Future Work . . . 265
24.4 Class API . . . 265
24.4.1 ESMF_WebServicesLoop . . . 266
24.4.2 ESMF_WebServicesCplCompLoop . . . 266

IV Infrastructure: Fields and Grids **268**

25 Overview of Data Classes **269**
25.1 Bit-for-Bit Considerations . . . 270
25.2 Regrid . . . 270
25.2.1 Interpolation methods: bilinear . . . 271
25.2.2 Interpolation methods: higher-order patch . . . 272
25.2.3 Interpolation methods: nearest source to destination . . . 273
25.2.4 Interpolation methods: nearest destination to source . . . 274
25.2.5 Interpolation methods: first-order conservative . . . 274
25.2.6 Interpolation methods: second-order conservative . . . 275
25.2.7 Conservation . . . 277
25.2.8 The effect of normalization options on integrals and values produced by conservative methods 277
25.2.9 Great circle cells . . . 278
25.2.10 Masking . . . 279
25.2.11 Extrapolation methods: overview . . . 279
25.2.12 Extrapolation methods: nearest source to destination . . . 279
25.2.13 Extrapolation methods: inverse distance weighted average . . . 279
25.2.14 Extrapolation methods: creep fill . . . 280
25.2.15 Unmapped destination points . . . 280
25.2.16 Spherical grids and poles . . . 280
25.2.17 Vector regridding . . . 282
25.2.18 Troubleshooting guide . . . 282
25.2.19 Restrictions and Future Work . . . 283
25.2.20 Design and implementation notes . . . 283
25.3 File-based Regrid API . . . 284
25.3.1 ESMF_RegridWeightGen . . . 284
25.3.2 ESMF_RegridWeightGen . . . 288
25.3.3 ESMF_FileRegrid . . . 290
25.4 Restrictions and Future Work . . . 292

26 FieldBundle Class **293**
26.1 Description . . . 293
26.2 Use and Examples . . . 293
26.2.1 Creating a FieldBundle from a list of Fields . . . 293
26.2.2 Creating an empty FieldBundle then add one Field to it . . . 294
26.2.3 Creating an empty FieldBundle then add a list of Fields to it . . . 294
26.2.4 Query a Field stored in the FieldBundle by name or index . . . 295
26.2.5 Query FieldBundle for Fields list either alphabetical or in order of addition . . . 295
26.2.6 Create a packed FieldBundle on a Grid . . . 296
26.2.7 Create a packed FieldBundle on a Mesh . . . 296
26.2.8 Destroy a FieldBundle . . . 296
26.2.9 Redistribute data from a source FieldBundle to a destination FieldBundle . . . 296
26.2.10 Redistribute data from a packed source FieldBundle to a packed destination FieldBundle . . . 297
26.2.11 Perform sparse matrix multiplication from a source FieldBundle to a destination FieldBundle . 297
26.2.12 Perform FieldBundle halo update . . . 299
26.3 Restrictions and Future Work . . . 301
26.4 Design and Implementation Notes . . . 302
26.5 Class API: Basic FieldBundle Methods . . . 302
26.5.1 ESMF_FieldBundleAssignment(=) . . . 302
26.5.2 ESMF_FieldBundleOperator(==) . . . 302
26.5.3 ESMF_FieldBundleOperator(/=) . . . 303
26.5.4 ESMF_FieldBundleAdd . . . 304
26.5.5 ESMF_FieldBundleAddReplace . . . 305
26.5.6 ESMF_FieldBundleCreate . . . 305
26.5.7 ESMF_FieldBundleCreate . . . 306
26.5.8 ESMF_FieldBundleCreate . . . 308
26.5.9 ESMF_FieldBundleDestroy . . . 309
26.5.10 ESMF_FieldBundleGet . . . 310
26.5.11 ESMF_FieldBundleGet . . . 312
26.5.12 ESMF_FieldBundleGet . . . 312
26.5.13 ESMF_FieldBundleGet . . . 313
26.5.14 ESMF_FieldBundleHalo . . . 314
26.5.15 ESMF_FieldBundleHaloRelease . . . 315
26.5.16 ESMF_FieldBundleHaloStore . . . 316
26.5.17 ESMF_FieldBundleIsCreated . . . 317
26.5.18 ESMF_FieldBundlePrint . . . 317
26.5.19 ESMF_FieldBundleRead . . . 318
26.5.20 ESMF_FieldBundleRedist . . . 319
26.5.21 ESMF_FieldBundleRedistRelease . . . 320
26.5.22 ESMF_FieldBundleRedistStore . . . 321
26.5.23 ESMF_FieldBundleRedistStore . . . 322
26.5.24 ESMF_FieldBundleRegrid . . . 324
26.5.25 ESMF_FieldBundleRegridRelease . . . 325
26.5.26 ESMF_FieldBundleRegridStore . . . 326
26.5.27 ESMF_FieldBundleRemove . . . 329
26.5.28 ESMF_FieldBundleReplace . . . 330
26.5.29 ESMF_FieldBundleSet . . . 331
26.5.30 ESMF_FieldBundleSet . . . 332
26.5.31 ESMF_FieldBundleSet . . . 332
26.5.32 ESMF_FieldBundleSet . . . 333
26.5.33 ESMF_FieldBundleSMM . . . 333

26.5.34 ESMF_FieldBundleSMMRelease . . . 335
26.5.35 ESMF_FieldBundleSMMStore . . . 336
26.5.36 ESMF_FieldBundleSMMStore . . . 338
26.5.37 ESMF_FieldBundleSMMStore . . . 340
26.5.38 ESMF_FieldBundleValidate . . . 341
26.5.39 ESMF_FieldBundleWrite . . . 341

27 Field Class **343**
27.1 Description . . . 343
27.1.1 Operations . . . 343
27.2 Constants . . . 344
27.2.1 ESMF_FIELDSTATUS . . . 344
27.3 Use and Examples . . . 344
27.3.1 Field create and destroy . . . 345
27.3.2 Get Fortran data pointer, bounds, and counts information from a Field . . . 345
27.3.3 Get Grid, Array, and other information from a Field . . . 346
27.3.4 Create a Field with a Grid, typekind, and rank . . . 347
27.3.5 Create a Field with a Grid and Arrayspec . . . 347
27.3.6 Create a Field with a Grid and Array . . . 349
27.3.7 Create an empty Field and complete it with FieldEmptySet and FieldEmptyComplete . . . 349
27.3.8 Create an empty Field and complete it with FieldEmptyComplete . . . 350
27.3.9 Create a 7D Field with a 5D Grid and 2D ungridded bounds from a Fortran data array . . . 351
27.3.10 Shared memory features: DE pinning, sharing, and migration . . . 352
27.3.11 Create a 2D Field with a 2D Grid and a Fortran data array . . . 354
27.3.12 Create a 2D Field with a 2D Grid and a Fortran data pointer . . . 355
27.3.13 Create a 3D Field with a 2D Grid and a 3D Fortran data array . . . 355
27.3.14 Create a 3D Field with a 2D Grid and a 3D Fortran data array with gridToFieldMap argument 357
27.3.15 Create a 3D Field with a 2D Grid and a 3D Fortran data array with halos . . . 357
27.3.16 Create a Field from a LocStream, typekind, and rank . . . 360
27.3.17 Create a Field from a LocStream and arrayspec . . . 361
27.3.18 Create a Field from a Mesh, typekind, and rank . . . 361
27.3.19 Create a Field from a Mesh and arrayspec . . . 362
27.3.20 Create a Field from a Mesh and an Array . . . 363
27.3.21 Create a Field from a Mesh and an ArraySpec with optional features . . . 363
27.3.22 Create a Field with replicated dimensions . . . 363
27.3.23 Create a Field on an arbitrarily distributed Grid . . . 365
27.3.24 Create a Field on an arbitrarily distributed Grid with replicated dimensions & ungridded bounds 366
27.3.25 Field regridding . . . 367
27.3.26 Field regrid with masking . . . 368
27.3.27 Field regrid example: Mesh to Mesh . . . 368
27.3.28 Gather Field data onto root PET . . . 372
27.3.29 Scatter Field data from root PET onto its set of joint PETs . . . 374
27.3.30 Redistribute data from source Field to destination Field . . . 375
27.3.31 FieldRedist as a form of scatter involving arbitrary distribution . . . 376
27.3.32 FieldRedist as a form of gather involving arbitrary distribution . . . 378
27.3.33 Sparse matrix multiplication from source Field to destination Field . . . 379
27.3.34 Field Halo solving a domain decomposed heat transfer problem . . . 383
27.4 Restrictions and Future Work . . . 385
27.5 Design and Implementation Notes . . . 385
27.6 Class API . . . 385
27.6.1 ESMF_FieldAssignment(=) . . . 385

27.6.2 ESMF_FieldOperator(==) . . . 386
27.6.3 ESMF_FieldOperator(/=) . . . 387
27.6.4 ESMF_FieldCopy . . . 387
27.6.5 ESMF_FieldCreate . . . 388
27.6.6 ESMF_FieldCreate . . . 389
27.6.7 ESMF_FieldCreate . . . 391
27.6.8 ESMF_FieldCreate . . . 392
27.6.9 ESMF_FieldCreate . . . 394
27.6.10 ESMF_FieldCreate . . . 395
27.6.11 ESMF_FieldCreate . . . 397
27.6.12 ESMF_FieldCreate . . . 399
27.6.13 ESMF_FieldCreate . . . 401
27.6.14 ESMF_FieldCreate . . . 403
27.6.15 ESMF_FieldCreate . . . 405
27.6.16 ESMF_FieldCreate . . . 406
27.6.17 ESMF_FieldCreate . . . 407
27.6.18 ESMF_FieldCreate . . . 408
27.6.19 ESMF_FieldCreate . . . 410
27.6.20 ESMF_FieldCreate . . . 411
27.6.21 ESMF_FieldCreate . . . 412
27.6.22 ESMF_FieldCreate . . . 414
27.6.23 ESMF_FieldCreate . . . 415
27.6.24 ESMF_FieldCreate . . . 417
27.6.25 ESMF_FieldCreate . . . 418
27.6.26 ESMF_FieldCreate . . . 419
27.6.27 ESMF_FieldCreate . . . 421
27.6.28 ESMF_FieldCreate . . . 422
27.6.29 ESMF_FieldCreate . . . 424
27.6.30 ESMF_FieldCreate . . . 425
27.6.31 ESMF_FieldDestroy . . . 426
27.6.32 ESMF_FieldEmptyComplete . . . 427
27.6.33 ESMF_FieldEmptyComplete . . . 429
27.6.34 ESMF_FieldEmptyComplete . . . 430
27.6.35 ESMF_FieldEmptyComplete . . . 432
27.6.36 ESMF_FieldEmptyComplete . . . 433
27.6.37 ESMF_FieldEmptyComplete . . . 435
27.6.38 ESMF_FieldEmptyComplete . . . 436
27.6.39 ESMF_FieldEmptyComplete . . . 438
27.6.40 ESMF_FieldEmptyComplete . . . 439
27.6.41 ESMF_FieldEmptyComplete . . . 441
27.6.42 ESMF_FieldEmptyComplete . . . 442
27.6.43 ESMF_FieldEmptyComplete . . . 443
27.6.44 ESMF_FieldEmptyComplete . . . 444
27.6.45 ESMF_FieldEmptyComplete . . . 445
27.6.46 ESMF_FieldEmptyCreate . . . 447
27.6.47 ESMF_FieldEmptyReset . . . 447
27.6.48 ESMF_FieldEmptySet . . . 448
27.6.49 ESMF_FieldEmptySet . . . 449
27.6.50 ESMF_FieldEmptySet . . . 450
27.6.51 ESMF_FieldEmptySet . . . 451
27.6.52 ESMF_FieldEmptySet . . . 452

27.6.53 ESMF_FieldFill . . . 452
27.6.54 ESMF_FieldGather . . . 454
27.6.55 ESMF_FieldGet . . . 455
27.6.56 ESMF_FieldGet . . . 459
27.6.57 ESMF_FieldGetBounds . . . 460
27.6.58 ESMF_FieldHalo . . . 462
27.6.59 ESMF_FieldHaloRelease . . . 463
27.6.60 ESMF_FieldHaloStore . . . 464
27.6.61 ESMF_FieldIsCreated . . . 465
27.6.62 ESMF_FieldLog . . . 466
27.6.63 ESMF_FieldPrint . . . 466
27.6.64 ESMF_FieldRead . . . 467
27.6.65 ESMF_FieldRedist . . . 468
27.6.66 ESMF_FieldRedistRelease . . . 469
27.6.67 ESMF_FieldRedistStore . . . 470
27.6.68 ESMF_FieldRedistStore . . . 471
27.6.69 ESMF_FieldRegrid . . . 473
27.6.70 ESMF_FieldRegridRelease . . . 475
27.6.71 ESMF_FieldRegridStore . . . 476
27.6.72 ESMF_FieldRegridStore . . . 481
27.6.73 ESMF_FieldRegridGetArea . . . 483
27.6.74 ESMF_FieldScatter . . . 484
27.6.75 ESMF_FieldSet . . . 485
27.6.76 ESMF_FieldSync . . . 486
27.6.77 ESMF_FieldSMM . . . 486
27.6.78 ESMF_FieldSMMRelease . . . 488
27.6.79 ESMF_FieldSMMStore . . . 489
27.6.80 ESMF_FieldSMMStore . . . 491
27.6.81 ESMF_FieldSMMStore . . . 494
27.6.82 ESMF_FieldSMMStore . . . 496
27.6.83 ESMF_FieldSMMStore . . . 498
27.6.84 ESMF_FieldSMMStore . . . 499
27.6.85 ESMF_FieldValidate . . . 501
27.6.86 ESMF_FieldWrite . . . 501
27.7 Class API: Field Utilities . . . 503
27.7.1 ESMF_GridGetFieldBounds . . . 503
27.7.2 ESMF_LocStreamGetFieldBounds . . . 505
27.7.3 ESMF_MeshGetFieldBounds . . . 506
27.7.4 ESMF_XGridGetFieldBounds . . . 507

28 ArrayBundle Class **509**
28.1 Description . . . 509
28.2 Use and Examples . . . 509
28.2.1 Creating an ArrayBundle from a list of Arrays . . . 509
28.2.2 Adding, removing, replacing Arrays in the ArrayBundle . . . 510
28.2.3 Accessing Arrays inside the ArrayBundle . . . 510
28.2.4 Destroying an ArrayBundle and its constituents . . . 511
28.2.5 Halo communication . . . 511
28.3 Restrictions and Future Work . . . 512
28.4 Design and Implementation Notes . . . 512
28.5 Class API . . . 512

28.5.1 ESMF_ArrayBundleAssignment(=) . . . 512
28.5.2 ESMF_ArrayBundleOperator(==) . . . 513
28.5.3 ESMF_ArrayBundleOperator(/=) . . . 514
28.5.4 ESMF_ArrayBundleAdd . . . 514
28.5.5 ESMF_ArrayBundleAddReplace . . . 515
28.5.6 ESMF_ArrayBundleCreate . . . 516
28.5.7 ESMF_ArrayBundleDestroy . . . 517
28.5.8 ESMF_ArrayBundleGet . . . 518
28.5.9 ESMF_ArrayBundleGet . . . 519
28.5.10 ESMF_ArrayBundleGet . . . 520
28.5.11 ESMF_ArrayBundleHalo . . . 521
28.5.12 ESMF_ArrayBundleHaloRelease . . . 521
28.5.13 ESMF_ArrayBundleHaloStore . . . 522
28.5.14 ESMF_ArrayBundleIsCreated . . . 524
28.5.15 ESMF_ArrayBundleLog . . . 524
28.5.16 ESMF_ArrayBundlePrint . . . 525
28.5.17 ESMF_ArrayBundleRead . . . 525
28.5.18 ESMF_ArrayBundleRedist . . . 526
28.5.19 ESMF_ArrayBundleRedistRelease . . . 527
28.5.20 ESMF_ArrayBundleRedistStore . . . 528
28.5.21 ESMF_ArrayBundleRedistStore . . . 530
28.5.22 ESMF_ArrayBundleRemove . . . 531
28.5.23 ESMF_ArrayBundleReplace . . . 532
28.5.24 ESMF_ArrayBundleSMM . . . 533
28.5.25 ESMF_ArrayBundleSMMRelease . . . 535
28.5.26 ESMF_ArrayBundleSMMStore . . . 536
28.5.27 ESMF_ArrayBundleSMMStore . . . 538
28.5.28 ESMF_ArrayBundleWrite . . . 539

29 Array Class **541**
29.1 Description . . . 541
29.2 Use and Examples . . . 541
29.2.1 Array from native Fortran array with 1 DE per PET . . . 541
29.2.2 Array from native Fortran array with extra elements for halo or padding . . . 545
29.2.3 Array from `ESMF_LocalArray` . . . 546
29.2.4 Create Array with automatic memory allocation . . . 550
29.2.5 Native language memory access . . . 552
29.2.6 Regions and default bounds . . . 553
29.2.7 Array bounds . . . 555
29.2.8 Computational region and extra elements for halo or padding . . . 556
29.2.9 Create 1D and 3D Arrays . . . 558
29.2.10 Working with Arrays of different rank . . . 559
29.2.11 Arrays with undistributed dimensions . . . 560
29.2.12 Arrays with replicated dimensions . . . 562
29.2.13 Shared memory features: DE pinning, sharing, and migration . . . 565
29.2.14 Communication – Scatter and Gather . . . 568
29.2.15 Communication – Halo . . . 572
29.2.16 Communication – Halo for arbitrary distribution . . . 577
29.2.17 Communication – Redist . . . 584
29.2.18 Communication – SparseMatMul . . . 588
29.2.19 Communication – Scatter and Gather, revisited . . . 595

29.2.20 Non-blocking Communications . . . 598
29.3 Restrictions and Future Work . . . 600
29.4 Design and Implementation Notes . . . 600
29.5 Class API . . . 600
29.5.1 ESMF_ArrayAssignment(=) . . . 600
29.5.2 ESMF_ArrayOperator(==) . . . 601
29.5.3 ESMF_ArrayOperator(/=) . . . 602
29.5.4 ESMF_ArrayCopy . . . 603
29.5.5 ESMF_ArrayCreate . . . 603
29.5.6 ESMF_ArrayCreate . . . 605
29.5.7 ESMF_ArrayCreate . . . 607
29.5.8 ESMF_ArrayCreate . . . 609
29.5.9 ESMF_ArrayCreate . . . 611
29.5.10 ESMF_ArrayCreate . . . 613
29.5.11 ESMF_ArrayCreate . . . 616
29.5.12 ESMF_ArrayCreate . . . 618
29.5.13 ESMF_ArrayCreate . . . 620
29.5.14 ESMF_ArrayCreate . . . 622
29.5.15 ESMF_ArrayCreate . . . 623
29.5.16 ESMF_ArrayDestroy . . . 625
29.5.17 ESMF_ArrayGather . . . 626
29.5.18 ESMF_ArrayGet . . . 627
29.5.19 ESMF_ArrayGet . . . 630
29.5.20 ESMF_ArrayGet . . . 631
29.5.21 ESMF_ArrayGet . . . 632
29.5.22 ESMF_ArrayHalo . . . 633
29.5.23 ESMF_ArrayHaloRelease . . . 634
29.5.24 ESMF_ArrayHaloStore . . . 635
29.5.25 ESMF_ArrayIsCreated . . . 636
29.5.26 ESMF_ArrayLog . . . 637
29.5.27 ESMF_ArrayPrint . . . 638
29.5.28 ESMF_ArrayRead . . . 638
29.5.29 ESMF_ArrayRedist . . . 639
29.5.30 ESMF_ArrayRedistRelease . . . 641
29.5.31 ESMF_ArrayRedistStore . . . 642
29.5.32 ESMF_ArrayRedistStore . . . 644
29.5.33 ESMF_ArrayRedistStore . . . 646
29.5.34 ESMF_ArrayRedistStore . . . 648
29.5.35 ESMF_ArrayScatter . . . 649
29.5.36 ESMF_ArraySet . . . 650
29.5.37 ESMF_ArraySet . . . 651
29.5.38 ESMF_ArraySMM . . . 652
29.5.39 ESMF_ArraySMMRelease . . . 654
29.5.40 ESMF_ArraySMMStore . . . 655
29.5.41 ESMF_ArraySMMStore . . . 657
29.5.42 ESMF_ArraySMMStore . . . 660
29.5.43 ESMF_ArraySMMStore . . . 662
29.5.44 ESMF_ArraySMMStore . . . 664
29.5.45 ESMF_ArraySMMStore . . . 665
29.5.46 ESMF_ArraySync . . . 667
29.5.47 ESMF_ArrayValidate . . . 667

29.5.48 ESMF_ArrayWrite . . . 668
29.5.49 ESMF_SparseMatrixWrite . . . 669
29.6 Class API: DynamicMask Methods . . . 670
29.6.1 ESMF_DynamicMaskSetR8R8R8 . . . 670
29.6.2 ESMF_DynamicMaskSetR8R8R8V . . . 671
29.6.3 ESMF_DynamicMaskSetR4R8R4 . . . 672
29.6.4 ESMF_DynamicMaskSetR4R8R4V . . . 673
29.6.5 ESMF_DynamicMaskSetR4R4R4 . . . 674
29.6.6 ESMF_DynamicMaskSetR4R4R4V . . . 675

30 LocalArray Class **676**
30.1 Description . . . 676
30.2 Restrictions and Future Work . . . 676
30.3 Class API . . . 676
30.3.1 ESMF_LocalArrayAssignment(=) . . . 676
30.3.2 ESMF_LocalArrayOperator(==) . . . 677
30.3.3 ESMF_LocalArrayOperator(/=) . . . 678
30.3.4 ESMF_LocalArrayCreate . . . 678
30.3.5 ESMF_LocalArrayCreate . . . 679
30.3.6 ESMF_LocalArrayCreate . . . 680
30.3.7 ESMF_LocalArrayCreate . . . 681
30.3.8 ESMF_LocalArrayDestroy . . . 682
30.3.9 ESMF_LocalArrayGet . . . 683
30.3.10 ESMF_LocalArrayGet . . . 684
30.3.11 ESMF_LocalArrayIsCreated . . . 684

31 ArraySpec Class **685**
31.1 Description . . . 685
31.2 Use and Examples . . . 685
31.2.1 Set ArraySpec values . . . 686
31.2.2 Get ArraySpec values . . . 686
31.3 Restrictions and Future Work . . . 686
31.4 Design and Implementation Notes . . . 687
31.5 Class API . . . 687
31.5.1 ESMF_ArraySpecAssignment(=) . . . 687
31.5.2 ESMF_ArraySpecOperator(==) . . . 687
31.5.3 ESMF_ArraySpecOperator(/=) . . . 688
31.5.4 ESMF_ArraySpecGet . . . 689
31.5.5 ESMF_ArraySpecPrint . . . 690
31.5.6 ESMF_ArraySpecSet . . . 690
31.5.7 ESMF_ArraySpecValidate . . . 691

32 Grid Class **691**
32.1 Description . . . 691
32.1.1 Grid Representation in ESMF . . . 692
32.1.2 Supported Grids . . . 692
32.1.3 Grid Topologies and Periodicity . . . 693
32.1.4 Grid Distribution . . . 693
32.1.5 Grid Coordinates . . . 694
32.1.6 Coordinate Specification and Generation . . . 695
32.1.7 Staggering . . . 695

32.1.8 Masking . . . 695
32.2 Constants . . . 695
32.2.1 ESMF_GRIDCONN . . . 695
32.2.2 ESMF_GRIDITEM . . . 696
32.2.3 ESMF_GRIDMATCH . . . 696
32.2.4 ESMF_GRIDSTATUS . . . 697
32.2.5 ESMF_POLEKIND . . . 697
32.2.6 ESMF_STAGGERLOC . . . 697
32.3 Use and Examples . . . 699
32.3.1 Create single-tile Grid shortcut method . . . 699
32.3.2 Create a 2D regularly distributed rectilinear Grid with uniformly spaced coordinates . . . 702
32.3.3 Create a periodic 2D regularly distributed rectilinear Grid . . . 703
32.3.4 Create a 2D irregularly distributed rectilinear Grid with uniformly spaced coordinates . . . 705
32.3.5 Create a 2D irregularly distributed Grid with curvilinear coordinates . . . 706
32.3.6 Create an irregularly distributed rectilinear Grid with a non-distributed vertical dimension . . . 707
32.3.7 Create an arbitrarily distributed rectilinear Grid with a non-distributed vertical dimension . . . 711
32.3.8 Create a curvilinear Grid using the coordinates defined in a SCRIP file . . . 713
32.3.9 Create an empty Grid in a parent Component for completion in a child Component . . . 714
32.3.10 Create a six-tile cubed sphere Grid . . . 715
32.3.11 Create a six-tile cubed sphere Grid and apply Schmidt transform . . . 715
32.3.12 Create a six-tile cubed sphere Grid from a GRIDSPEC Mosaic file . . . 716
32.3.13 Grid stagger locations . . . 719
32.3.14 Associate coordinates with stagger locations . . . 720
32.3.15 Specify the relationship of coordinate Arrays to index space dimensions . . . 720
32.3.16 Access coordinates . . . 721
32.3.17 Associate items with stagger locations . . . 722
32.3.18 Access items . . . 722
32.3.19 Grid regions and bounds . . . 723
32.3.20 Get Grid coordinate bounds . . . 724
32.3.21 Get Grid stagger location bounds . . . 725
32.3.22 Get Grid stagger location information . . . 725
32.3.23 Create an Array at a stagger location . . . 725
32.3.24 Create more complex Grids using DistGrid . . . 726
32.3.25 Specify custom stagger locations . . . 727
32.3.26 Specify custom stagger padding . . . 729
32.4 Restrictions and Future Work . . . 731
32.5 Design and Implementation Notes . . . 731
32.5.1 Grid Topology . . . 731
32.6 Class API: General Grid Methods . . . 731
32.6.1 ESMF_GridAssignment(=) . . . 731
32.6.2 ESMF_GridOperator(==) . . . 732
32.6.3 ESMF_GridOperator(/=) . . . 733
32.6.4 ESMF_GridAddCoord . . . 733
32.6.5 ESMF_GridAddItem . . . 734
32.6.6 ESMF_GridCreate . . . 736
32.6.7 ESMF_GridCreate . . . 737
32.6.8 ESMF_GridCreate . . . 738
32.6.9 ESMF_GridCreate . . . 740
32.6.10 ESMF_GridCreate . . . 743
32.6.11 ESMF_GridCreate . . . 745
32.6.12 ESMF_GridCreate . . . 746

32.6.13 ESMF_GridCreate . . . 747
32.6.14 ESMF_GridCreate . . . 749
32.6.15 ESMF_GridCreate1PeriDim . . . 751
32.6.16 ESMF_GridCreate1PeriDim . . . 753
32.6.17 ESMF_GridCreate1PeriDim . . . 755
32.6.18 ESMF_GridCreate2PeriDim . . . 757
32.6.19 ESMF_GridCreate2PeriDim . . . 759
32.6.20 ESMF_GridCreate2PeriDim . . . 761
32.6.21 ESMF_GridCreateNoPeriDim . . . 763
32.6.22 ESMF_GridCreateNoPeriDim . . . 765
32.6.23 ESMF_GridCreateNoPeriDim . . . 767
32.6.24 ESMF_GridCreate1PeriDimUfrm . . . 769
32.6.25 ESMF_GridCreate1PeriDimUfrm . . . 770
32.6.26 ESMF_GridCreateNoPeriDimUfrm . . . 772
32.6.27 ESMF_GridCreateCubedSphere . . . 774
32.6.28 ESMF_GridCreateCubedSphere . . . 775
32.6.29 ESMF_GridCreateMosaic . . . 777
32.6.30 ESMF_GridCreateMosaic . . . 779
32.6.31 ESMF_GridDestroy . . . 780
32.6.32 ESMF_GridEmptyComplete . . . 781
32.6.33 ESMF_GridEmptyComplete . . . 784
32.6.34 ESMF_GridEmptyComplete . . . 786
32.6.35 ESMF_GridEmptyCreate . . . 788
32.6.36 ESMF_GridGet . . . 789
32.6.37 ESMF_GridGet . . . 791
32.6.38 ESMF_GridGet . . . 792
32.6.39 ESMF_GridGet . . . 793
32.6.40 ESMF_GridGet . . . 794
32.6.41 ESMF_GridGetCoord . . . 795
32.6.42 ESMF_GridGetCoord . . . 797
32.6.43 ESMF_GridGetCoord . . . 798
32.6.44 ESMF_GridGetCoord . . . 799
32.6.45 ESMF_GridGetCoord . . . 800
32.6.46 ESMF_GridGetCoordBounds . . . 801
32.6.47 ESMF_GridGetItem . . . 802
32.6.48 ESMF_GridGetItem . . . 804
32.6.49 ESMF_GridGetItem . . . 805
32.6.50 ESMF_GridGetItemBounds . . . 806
32.6.51 ESMF_GridIsCreated . . . 808
32.6.52 ESMF_GridMatch . . . 808
32.6.53 ESMF_GridRedist . . . 809
32.6.54 ESMF_GridSetCoord . . . 810
32.6.55 ESMF_GridSetItem . . . 810
32.6.56 ESMF_GridValidate . . . 811
32.7 Class API: StaggerLoc Methods . . . 812
32.7.1 ESMF_StaggerLocGet . . . 812
32.7.2 ESMF_StaggerLocSet . . . 813
32.7.3 ESMF_StaggerLocSet . . . 813
32.7.4 ESMF_StaggerLocString . . . 814
32.7.5 ESMF_StaggerLocPrint . . . 815

33 LocStream Class **815**
33.1 Description . . . 815
33.2 Constants . . . 816
33.2.1 Coordinate keyNames . . . 816
33.2.2 Masking keyName . . . 816
33.3 Use and Examples . . . 817
33.3.1 Create a LocStream with user allocated memory . . . 817
33.3.2 Create a LocStream with internally allocated memory . . . 818
33.3.3 Create a LocStream with a distribution based on a Grid . . . 820
33.3.4 Regridding from a Grid to a LocStream . . . 823
33.4 Class API . . . 826
33.4.1 ESMF_LocStreamAssignment(=) . . . 826
33.4.2 ESMF_LocStreamOperator(==) . . . 827
33.4.3 ESMF_LocStreamOperator(/=) . . . 827
33.4.4 ESMF_LocStreamAddKey . . . 828
33.4.5 ESMF_LocStreamAddKey . . . 829
33.4.6 ESMF_LocStreamAddKey . . . 830
33.4.7 ESMF_LocStreamCreate . . . 831
33.4.8 ESMF_LocStreamCreate . . . 832
33.4.9 ESMF_LocStreamCreate . . . 833
33.4.10 ESMF_LocStreamCreate . . . 834
33.4.11 ESMF_LocStreamCreate . . . 834
33.4.12 ESMF_LocStreamCreate . . . 835
33.4.13 ESMF_LocStreamCreate . . . 836
33.4.14 ESMF_LocStreamCreate . . . 837
33.4.15 ESMF_LocStreamDestroy . . . 838
33.4.16 ESMF_LocStreamGet . . . 839
33.4.17 ESMF_LocStreamGetBounds . . . 840
33.4.18 ESMF_LocStreamGetKey . . . 841
33.4.19 ESMF_LocStreamGetKey . . . 842
33.4.20 ESMF_LocStreamGetKey . . . 842
33.4.21 ESMF_LocStreamIsCreated . . . 844
33.4.22 ESMF_LocStreamPrint . . . 844
33.4.23 ESMF_LocStreamValidate . . . 845

34 Mesh Class **845**
34.1 Description . . . 845
34.1.1 Mesh representation in ESMF . . . 846
34.1.2 Supported Meshes . . . 846
34.2 Constants . . . 847
34.2.1 ESMF_MESHELEMTYPE . . . 847
34.3 Use and Examples . . . 848
34.3.1 Mesh creation . . . 848
34.3.2 Create a small single PET Mesh in one step . . . 849
34.3.3 Create a small single PET Mesh in three steps . . . 851
34.3.4 Create a small Mesh on 4 PETs in one step . . . 854
34.3.5 Create a copy of a Mesh with a new distribution . . . 858
34.3.6 Create a small Mesh of all one element type on 4 PETs using easy element method . . . 860
34.3.7 Create a small Mesh of multiple element types on 4 PETs using easy element method . . . 862
34.3.8 Create a Mesh from an unstructured grid file . . . 865
34.3.9 Create a Mesh representation of a cubed sphere grid . . . 865

34.3.10 Remove Mesh memory . . . 865
34.3.11 Mesh Masking . . . 866
34.3.12 Mesh Halo Communication . . . 867
34.4 Class API . . . 869
34.4.1 ESMF_MeshAssignment(=) . . . 869
34.4.2 ESMF_MeshOperator(==) . . . 870
34.4.3 ESMF_MeshOperator(/=) . . . 870
34.4.4 ESMF_MeshAddElements . . . 871
34.4.5 ESMF_MeshAddNodes . . . 873
34.4.6 ESMF_MeshCreate . . . 874
34.4.7 ESMF_MeshCreate . . . 875
34.4.8 ESMF_MeshCreate . . . 877
34.4.9 ESMF_MeshCreate . . . 878
34.4.10 ESMF_MeshCreate . . . 879
34.4.11 ESMF_MeshCreate . . . 880
34.4.12 ESMF_MeshCreate . . . 882
34.4.13 ESMF_MeshCreateCubedSphere . . . 884
34.4.14 ESMF_MeshDestroy . . . 884
34.4.15 ESMF_MeshEmptyCreate . . . 885
34.4.16 ESMF_MeshFreeMemory . . . 886
34.4.17 ESMF_MeshGet . . . 887
34.4.18 ESMF_MeshGetMOAB . . . 890
34.4.19 ESMF_MeshIsCreated . . . 890
34.4.20 ESMF_MeshSet . . . 891
34.4.21 ESMF_MeshSetMOAB . . . 892

35 XGrid Class **892**
35.1 Description . . . 892
35.2 Constants . . . 893
35.2.1 ESMF_XGRIDSIDE . . . 893
35.3 Use and Examples . . . 894
35.3.1 Create an XGrid from Grids then use it for regridding . . . 894
35.3.2 Using XGrid in Earth System modeling . . . 897
35.3.3 Create an XGrid from user input data then use it for regridding . . . 898
35.3.4 Query the XGrid for its internal information . . . 904
35.3.5 Destroying the XGrid and other resources . . . 905
35.4 Restrictions and Future Work . . . 906
35.4.1 Restrictions and Future Work . . . 906
35.5 Design and Implementation Notes . . . 906
35.6 Class API . . . 906
35.6.1 ESMF_XGridAssignment(=) . . . 906
35.6.2 ESMF_XGridOperator(==) . . . 907
35.6.3 ESMF_XGridOperator(/=) . . . 907
35.6.4 ESMF_XGridCreate . . . 908
35.6.5 ESMF_XGridCreateFromSparseMat . . . 910
35.6.6 ESMF_XGridIsCreated . . . 912
35.6.7 ESMF_XGridDestroy . . . 913
35.6.8 ESMF_XGridGet . . . 914

36 Geom Class **916**
36.1 Description . . . 916

36.2 Class API: Geom Methods . . . 916
36.2.1 ESMF_GeomAssignment(=) . . . 916
36.2.2 ESMF_GeomOperator(==) . . . 916
36.2.3 ESMF_GeomOperator(/=) . . . 917
36.2.4 ESMF_GeomCreate . . . 918
36.2.5 ESMF_GeomCreate . . . 918
36.2.6 ESMF_GeomCreate . . . 919
36.2.7 ESMF_GeomCreate . . . 920
36.2.8 ESMF_GeomDestroy . . . 920
36.2.9 ESMF_GeomGet . . . 921
36.2.10 ESMF_GeomMatch . . . 922

37 DistGrid Class **923**
37.1 Description . . . 923
37.2 Constants . . . 923
37.2.1 ESMF_DISTGRIDMATCH . . . 923
37.3 Use and Examples . . . 924
37.3.1 Single tile DistGrid with regular decomposition . . . 924
37.3.2 DistGrid and DELayout . . . 926
37.3.3 Single tile DistGrid with decomposition by DE blocks . . . 929
37.3.4 2D multi-tile DistGrid with regular decomposition . . . 929
37.3.5 Arbitrary DistGrids with user-supplied sequence indices . . . 931
37.3.6 DistGrid Connections - Definition . . . 932
37.3.7 DistGrid Connections - Single tile periodic and pole connections . . . 936
37.3.8 DistGrid Connections - Multi tile connections . . . 942
37.4 Restrictions and Future Work . . . 949
37.5 Design and Implementation Notes . . . 949
37.6 Class API . . . 950
37.6.1 ESMF_DistGridAssignment(=) . . . 950
37.6.2 ESMF_DistGridOperator(==) . . . 951
37.6.3 ESMF_DistGridOperator(/=) . . . 952
37.6.4 ESMF_DistGridCreate . . . 952
37.6.5 ESMF_DistGridCreate . . . 954
37.6.6 ESMF_DistGridCreate . . . 956
37.6.7 ESMF_DistGridCreate . . . 958
37.6.8 ESMF_DistGridCreate . . . 960
37.6.9 ESMF_DistGridCreate . . . 961
37.6.10 ESMF_DistGridCreate . . . 963
37.6.11 ESMF_DistGridCreate . . . 964
37.6.12 ESMF_DistGridCreate . . . 965
37.6.13 ESMF_DistGridCreate . . . 965
37.6.14 ESMF_DistGridDestroy . . . 966
37.6.15 ESMF_DistGridGet . . . 967
37.6.16 ESMF_DistGridGet . . . 970
37.6.17 ESMF_DistGridGet . . . 971
37.6.18 ESMF_DistGridIsCreated . . . 972
37.6.19 ESMF_DistGridLog . . . 973
37.6.20 ESMF_DistGridMatch . . . 973
37.6.21 ESMF_DistGridPrint . . . 974
37.6.22 ESMF_DistGridSet . . . 975
37.6.23 ESMF_DistGridValidate . . . 975

37.7 Class API: DistGridConnection Methods . . . 976
37.7.1 ESMF_DistGridConnectionGet . . . 976
37.7.2 ESMF_DistGridConnectionSet . . . 977
37.8 Class API: DistGridRegDecomp Methods . . . 978
37.8.1 ESMF_DistGridRegDecompSetCubic . . . 978

38 RouteHandle Class 978
38.1 Description . . . 978
38.2 Use and Examples . . . 978
38.2.1 Bit-for-bit reproducibility . . . 979
38.2.2 Asynchronous RouteHandle communication with VMEpoch . . . 991
38.2.3 Creating a RouteHandle from an existing RouteHandle – Transfer to a different set of PETs . 992
38.2.4 Write a RouteHandle to file and creating a RouteHandle from file . . . 995
38.2.5 Reusablity of RouteHandles and interleaved distributed and undistributed dimensions . . . 996
38.2.6 Dynamic Masking . . . 999
38.3 Restrictions and Future Work . . . 1005
38.4 Design and Implementation Notes . . . 1006
38.5 Class API . . . 1006
38.5.1 ESMF_RouteHandleCreate . . . 1006
38.5.2 ESMF_RouteHandleCreate . . . 1007
38.5.3 ESMF_RouteHandleDestroy . . . 1007
38.5.4 ESMF_RouteHandleGet . . . 1008
38.5.5 ESMF_RouteHandleIsCreated . . . 1009
38.5.6 ESMF_RouteHandleSet . . . 1009
38.5.7 ESMF_RouteHandleWrite . . . 1010

39 I/O Capability 1011
39.1 Description . . . 1011
39.2 Data I/O . . . 1011
39.3 Data formats . . . 1011
39.4 Restrictions and Future Work . . . 1012
39.5 Design and Implementation Notes . . . 1012

V Infrastructure: Utilities 1013

40 Overview of Infrastructure Utility Classes 1014

41 Info Class (Object Attributes) 1015
41.1 Migrating from Attribute . . . 1015
41.1.1 Setting an Attribute . . . 1016
41.1.2 Getting an Attribute . . . 1016
41.2 Key Format Overview . . . 1017
41.3 Usage and Examples . . . 1017
41.3.1 Retrieve an Info Handle . . . 1017
41.3.2 General Usage Examples . . . 1018
41.4 Class API . . . 1021
41.4.1 ESMF_InfoAssignment(=) . . . 1021
41.4.2 ESMF_InfoOperator(==) . . . 1022
41.4.3 ESMF_InfoOperator(/=) . . . 1022
41.4.4 ESMF_InfoBroadcast . . . 1023
41.4.5 ESMF_InfoCreate . . . 1023

41.4.6 ESMF_InfoCreate . . . 1024
41.4.7 ESMF_InfoCreate . . . 1024
41.4.8 ESMF_InfoCreate . . . 1025
41.4.9 ESMF_InfoDestroy . . . 1026
41.4.10 ESMF_InfoDump . . . 1026
41.4.11 ESMF_InfoGet . . . 1027
41.4.12 ESMF_InfoGetCharAlloc . . . 1028
41.4.13 ESMF_InfoGet . . . 1029
41.4.14 ESMF_InfoGetAlloc . . . 1030
41.4.15 ESMF_InfoGet . . . 1031
41.4.16 ESMF_InfoGetFromHost . . . 1032
41.4.17 ESMF_InfoGetTK . . . 1033
41.4.18 ESMF_InfoGetArrayMeta . . . 1033
41.4.19 ESMF_InfoIsPresent . . . 1034
41.4.20 ESMF_InfoIsSet . . . 1035
41.4.21 ESMF_InfoLog . . . 1035
41.4.22 ESMF_InfoPrint . . . 1036
41.4.23 ESMF_InfoReadJSON . . . 1037
41.4.24 ESMF_InfoRemove . . . 1037
41.4.25 ESMF_InfoSet . . . 1038
41.4.26 ESMF_InfoSet . . . 1039
41.4.27 ESMF_InfoSet . . . 1040
41.4.28 ESMF_InfoSet . . . 1040
41.4.29 ESMF_InfoSetNULL . . . 1041
41.4.30 ESMF_InfoSync . . . 1042
41.4.31 ESMF_InfoUpdate . . . 1043
41.4.32 ESMF_InfoWriteJSON . . . 1044

42 Time Manager Utility 1044
42.1 Time Manager Classes . . . 1044
42.2 Calendar . . . 1046
42.3 Time Instants and TimeIntervals . . . 1046
42.4 Clocks and Alarms . . . 1046
42.5 Design and Implementation Notes . . . 1047
42.6 Object Model . . . 1049

43 Calendar Class 1050
43.1 Description . . . 1050
43.2 Constants . . . 1050
43.2.1 ESMF_CALKIND . . . 1050
43.3 Use and Examples . . . 1051
43.3.1 Calendar creation . . . 1051
43.3.2 Calendar comparison . . . 1052
43.3.3 Time conversion between Calendars . . . 1052
43.3.4 Add a time interval to a time on a Calendar . . . 1052
43.3.5 Calendar destruction . . . 1053
43.4 Restrictions and Future Work . . . 1053
43.5 Class API . . . 1053
43.5.1 ESMF_CalendarAssignment(=) . . . 1053
43.5.2 ESMF_CalendarOperator(==) . . . 1054
43.5.3 ESMF_CalendarOperator(/=) . . . 1055

43.5.4 ESMF_CalendarCreate . . . 1056
43.5.5 ESMF_CalendarCreate . . . 1057
43.5.6 ESMF_CalendarCreate . . . 1058
43.5.7 ESMF_CalendarDestroy . . . 1059
43.5.8 ESMF_CalendarGet . . . 1060
43.5.9 ESMF_CalendarIsCreated . . . 1061
43.5.10 ESMF_CalendarIsLeapYear . . . 1061
43.5.11 ESMF_CalendarPrint . . . 1062
43.5.12 ESMF_CalendarSet . . . 1063
43.5.13 ESMF_CalendarSet . . . 1064
43.5.14 ESMF_CalendarSetDefault . . . 1065
43.5.15 ESMF_CalendarSetDefault . . . 1065
43.5.16 ESMF_CalendarValidate . . . 1066

44 Time Class **1067**
44.1 Description . . . 1067
44.2 Use and Examples . . . 1067
44.2.1 Time initialization . . . 1068
44.2.2 Time increment . . . 1068
44.2.3 Time comparison . . . 1068
44.3 Restrictions and Future Work . . . 1069
44.4 Class API . . . 1069
44.4.1 ESMF_TimeAssignment(=) . . . 1069
44.4.2 ESMF_TimeOperator(+) . . . 1069
44.4.3 ESMF_TimeOperator(-) . . . 1070
44.4.4 ESMF_TimeOperator(-) . . . 1071
44.4.5 ESMF_TimeOperator(==) . . . 1072
44.4.6 ESMF_TimeOperator(/=) . . . 1072
44.4.7 ESMF_TimeOperator(<) . . . 1073
44.4.8 ESMF_TimeOperator(<=) . . . 1074
44.4.9 ESMF_TimeOperator(>) . . . 1074
44.4.10 ESMF_TimeOperator(>=) . . . 1075
44.4.11 ESMF_TimeGet . . . 1076
44.4.12 ESMF_TimeIsLeapYear . . . 1079
44.4.13 ESMF_TimeIsSameCalendar . . . 1080
44.4.14 ESMF_TimePrint . . . 1081
44.4.15 ESMF_TimeSet . . . 1082
44.4.16 ESMF_TimeSet . . . 1085
44.4.17 ESMF_TimeSyncToRealTime . . . 1085
44.4.18 ESMF_TimeValidate . . . 1086

45 TimeInterval Class **1087**
45.1 Description . . . 1087
45.2 Use and Examples . . . 1087
45.2.1 TimeInterval initialization . . . 1088
45.2.2 TimeInterval conversion . . . 1088
45.2.3 TimeInterval difference . . . 1088
45.2.4 TimeInterval multiplication . . . 1089
45.2.5 TimeInterval comparison . . . 1089
45.3 Restrictions and Future Work . . . 1089
45.4 Class API . . . 1089

45.4.1 ESMF_TimeIntervalAssignment(=) . . . 1089
45.4.2 ESMF_TimeIntervalOperator(+) . . . 1090
45.4.3 ESMF_TimeIntervalOperator(-) . . . 1091
45.4.4 ESMF_TimeIntervalOperator(-) . . . 1091
45.4.5 ESMF_TimeIntervalOperator(/) . . . 1092
45.4.6 ESMF_TimeIntervalOperator(/) . . . 1093
45.4.7 ESMF_TimeIntervalFunction(MOD) . . . 1093
45.4.8 ESMF_TimeIntervalOperator(*) . . . 1094
45.4.9 ESMF_TimeIntervalOperator(==) . . . 1095
45.4.10 ESMF_TimeIntervalOperator(/=) . . . 1095
45.4.11 ESMF_TimeIntervalOperator(<) . . . 1096
45.4.12 ESMF_TimeIntervalOperator(<=) . . . 1097
45.4.13 ESMF_TimeIntervalOperator(>) . . . 1097
45.4.14 ESMF_TimeIntervalOperator(>=) . . . 1098
45.4.15 ESMF_TimeIntervalAbsValue . . . 1099
45.4.16 ESMF_TimeIntervalGet . . . 1099
45.4.17 ESMF_TimeIntervalGet . . . 1102
45.4.18 ESMF_TimeIntervalGet . . . 1105
45.4.19 ESMF_TimeIntervalGet . . . 1107
45.4.20 ESMF_TimeIntervalNegAbsValue . . . 1110
45.4.21 ESMF_TimeIntervalPrint . . . 1111
45.4.22 ESMF_TimeIntervalSet . . . 1111
45.4.23 ESMF_TimeIntervalSet . . . 1114
45.4.24 ESMF_TimeIntervalSet . . . 1116
45.4.25 ESMF_TimeIntervalSet . . . 1118
45.4.26 ESMF_TimeIntervalSet . . . 1120
45.4.27 ESMF_TimeIntervalSet . . . 1121
45.4.28 ESMF_TimeIntervalSet . . . 1122
45.4.29 ESMF_TimeIntervalSet . . . 1122
45.4.30 ESMF_TimeIntervalValidate . . . 1123

46 Clock Class 1124
46.1 Description . . . 1124
46.2 Constants . . . 1124
46.2.1 ESMF_DIRECTION . . . 1124
46.3 Use and Examples . . . 1125
46.3.1 Clock creation . . . 1126
46.3.2 Clock advance . . . 1126
46.3.3 Clock examination . . . 1126
46.3.4 Clock reversal . . . 1127
46.3.5 Clock destruction . . . 1127
46.4 Restrictions and Future Work . . . 1127
46.5 Class API . . . 1128
46.5.1 ESMF_ClockAssignment(=) . . . 1128
46.5.2 ESMF_ClockOperator(==) . . . 1128
46.5.3 ESMF_ClockOperator(/=) . . . 1129
46.5.4 ESMF_ClockAdvance . . . 1130
46.5.5 ESMF_ClockCreate . . . 1130
46.5.6 ESMF_ClockCreate . . . 1132
46.5.7 ESMF_ClockDestroy . . . 1133
46.5.8 ESMF_ClockGet . . . 1134

46.5.9 ESMF_ClockGetAlarm . . . 1136
46.5.10 ESMF_ClockGetAlarmList . . . 1136
46.5.11 ESMF_ClockGetNextTime . . . 1137
46.5.12 ESMF_ClockIsCreated . . . 1138
46.5.13 ESMF_ClockIsDone . . . 1139
46.5.14 ESMF_ClockIsReverse . . . 1140
46.5.15 ESMF_ClockIsStopTime . . . 1140
46.5.16 ESMF_ClockIsStopTimeEnabled . . . 1141
46.5.17 ESMF_ClockPrint . . . 1142
46.5.18 ESMF_ClockSet . . . 1143
46.5.19 ESMF_ClockStopTimeDisable . . . 1144
46.5.20 ESMF_ClockStopTimeEnable . . . 1145
46.5.21 ESMF_ClockSyncToRealTime . . . 1146
46.5.22 ESMF_ClockValidate . . . 1146

47 Alarm Class 1148
47.1 Description . . . 1148
47.2 Constants . . . 1148
47.2.1 ESMF_ALARMLIST . . . 1148
47.3 Use and Examples . . . 1148
47.3.1 Clock initialization . . . 1149
47.3.2 Alarm initialization . . . 1149
47.3.3 Clock advance and Alarm processing . . . 1150
47.3.4 Alarm and Clock destruction . . . 1151
47.4 Restrictions and Future Work . . . 1151
47.5 Design and Implementation Notes . . . 1151
47.6 Class API . . . 1152
47.6.1 ESMF_AlarmAssignment(=) . . . 1152
47.6.2 ESMF_AlarmOperator(==) . . . 1152
47.6.3 ESMF_AlarmOperator(/=) . . . 1153
47.6.4 ESMF_AlarmCreate . . . 1154
47.6.5 ESMF_AlarmCreate . . . 1155
47.6.6 ESMF_AlarmDestroy . . . 1156
47.6.7 ESMF_AlarmDisable . . . 1157
47.6.8 ESMF_AlarmEnable . . . 1157
47.6.9 ESMF_AlarmGet . . . 1158
47.6.10 ESMF_AlarmIsCreated . . . 1159
47.6.11 ESMF_AlarmIsEnabled . . . 1160
47.6.12 ESMF_AlarmIsRinging . . . 1161
47.6.13 ESMF_AlarmIsSticky . . . 1161
47.6.14 ESMF_AlarmNotSticky . . . 1162
47.6.15 ESMF_AlarmPrint . . . 1163
47.6.16 ESMF_AlarmRingerOff . . . 1164
47.6.17 ESMF_AlarmRingerOn . . . 1165
47.6.18 ESMF_AlarmSet . . . 1165
47.6.19 ESMF_AlarmSticky . . . 1167
47.6.20 ESMF_AlarmValidate . . . 1167
47.6.21 ESMF_AlarmWasPrevRinging . . . 1168
47.6.22 ESMF_AlarmWillRingNext . . . 1169

48 Config Class 1170

48.1 Description . . . 1170
48.1.1 Package history . . . 1170
48.1.2 Resource files . . . 1170
48.2 Use and Examples . . . 1171
48.2.1 Variable declarations . . . 1171
48.2.2 Creation of a Config . . . 1171
48.2.3 How to retrieve a label with a single value . . . 1172
48.2.4 How to retrieve a label with multiple values . . . 1172
48.2.5 How to retrieve a table . . . 1173
48.2.6 Destruction of a Config . . . 1173
48.2.7 Loading a YAML file . . . 1173
48.2.8 Creating from HConfig object . . . 1175
48.3 Class API . . . 1176
48.3.1 ESMF_ConfigAssignment(=) . . . 1176
48.3.2 ESMF_ConfigOperator(==) . . . 1176
48.3.3 ESMF_ConfigOperator(/=) . . . 1177
48.3.4 ESMF_ConfigCreate . . . 1177
48.3.5 ESMF_ConfigCreate . . . 1178
48.3.6 ESMF_ConfigDestroy . . . 1179
48.3.7 ESMF_ConfigFindLabel . . . 1180
48.3.8 ESMF_ConfigFindNextLabel . . . 1181
48.3.9 ESMF_ConfigGet . . . 1181
48.3.10 ESMF_ConfigGetAttribute . . . 1182
48.3.11 ESMF_ConfigGetAttribute . . . 1183
48.3.12 ESMF_ConfigGetChar . . . 1184
48.3.13 ESMF_ConfigGetDim . . . 1185
48.3.14 ESMF_ConfigGetLen . . . 1185
48.3.15 ESMF_ConfigIsCreated . . . 1186
48.3.16 ESMF_ConfigLoadFile . . . 1187
48.3.17 ESMF_ConfigLog . . . 1188
48.3.18 ESMF_ConfigNextLine . . . 1189
48.3.19 ESMF_ConfigPrint . . . 1189
48.3.20 ESMF_ConfigSetAttribute . . . 1190
48.3.21 ESMF_ConfigValidate . . . 1191

49 HConfig Class 1191
49.1 Description . . . 1191
49.2 Constants . . . 1192
49.2.1 ESMF_HCONFIGMATCH . . . 1192
49.3 Use and Examples . . . 1192
49.3.1 Create an empty HConfig object . . . 1193
49.3.2 Set HConfig from string using YAML syntax . . . 1193
49.3.3 Iterator based HConfig sequence parsing . . . 1193
49.3.4 Index based random access HConfig sequence parsing . . . 1195
49.3.5 Destroy a HConfig object . . . 1196
49.3.6 Create a HConfig object directly loading from YAML string . . . 1196
49.3.7 Iterator based HConfig map parsing . . . 1197
49.3.8 Key based random access HConfig map parsing . . . 1198
49.3.9 Access HConfig from Config . . . 1199
49.3.10 Load HConfig from YAML file . . . 1200
49.3.11 Save HConfig to YAML file . . . 1200

49.3.12 Tags and Schemas . . . 1202
49.3.13 Comparing HConfig objects . . . 1206
49.3.14 Adding, Setting, and Removing elements from HConfig object . . . 1207
49.3.15 Working with multiple YAML documents . . . 1212
49.3.16 Sequence shortcuts for: Create, As, Add, and Set . . . 1213
49.4 Restrictions and Future Work . . . 1215
49.5 Design and Implementation Notes . . . 1215
49.6 Class API . . . 1215
49.6.1 ESMF_HConfigAssignment(=) . . . 1215
49.6.2 ESMF_HConfigOperator(==) . . . 1216
49.6.3 ESMF_HConfigOperator(/=) . . . 1217
49.6.4 ESMF_HConfigAdd . . . 1217
49.6.5 ESMF_HConfigAddMapKey . . . 1218
49.6.6 ESMF_HConfigAddMapVal . . . 1220
49.6.7 ESMF_HConfigAs<TypeSpec> . . . 1221
49.6.8 ESMF_HConfigAs<TypeSpec>MapKey . . . 1222
49.6.9 ESMF_HConfigAs<TypeSpec>MapVal . . . 1223
49.6.10 ESMF_HConfigAs<TypeSpec>Seq . . . 1224
49.6.11 ESMF_HConfigAs<TypeSpec>SeqMapKey . . . 1225
49.6.12 ESMF_HConfigAs<TypeSpec>SeqMapVal . . . 1227
49.6.13 ESMF_HConfigCreate . . . 1228
49.6.14 ESMF_HConfigCreate . . . 1228
49.6.15 ESMF_HConfigCreate . . . 1229
49.6.16 ESMF_HConfigCreate . . . 1230
49.6.17 ESMF_HConfigCreateAt . . . 1230
49.6.18 ESMF_HConfigCreateAtMapKey . . . 1231
49.6.19 ESMF_HConfigCreateAtMapVal . . . 1232
49.6.20 ESMF_HConfigDestroy . . . 1233
49.6.21 ESMF_HConfigFileLoad . . . 1234
49.6.22 ESMF_HConfigFileSave . . . 1234
49.6.23 ESMF_HConfigGetDocCount . . . 1235
49.6.24 ESMF_HConfigGetSize . . . 1235
49.6.25 ESMF_HConfigGetSizeMapKey . . . 1236
49.6.26 ESMF_HConfigGetSizeMapVal . . . 1237
49.6.27 ESMF_HConfigGetTag . . . 1238
49.6.28 ESMF_HConfigGetTagMapKey . . . 1239
49.6.29 ESMF_HConfigGetTagMapVal . . . 1239
49.6.30 ESMF_HConfigIs<NodeType> . . . 1240
49.6.31 ESMF_HConfigIs<NodeType>MapKey . . . 1241
49.6.32 ESMF_HConfigIs<NodeType>MapVal . . . 1242
49.6.33 ESMF_HConfigIterBegin . . . 1243
49.6.34 ESMF_HConfigIterBeginMapKey . . . 1244
49.6.35 ESMF_HConfigIterBeginMapVal . . . 1244
49.6.36 ESMF_HConfigIterEnd . . . 1245
49.6.37 ESMF_HConfigIterEndMapKey . . . 1245
49.6.38 ESMF_HConfigIterEndMapVal . . . 1246
49.6.39 ESMF_HConfigIterIsMap . . . 1247
49.6.40 ESMF_HConfigIterIsSequence . . . 1247
49.6.41 ESMF_HConfigIterLoop . . . 1248
49.6.42 ESMF_HConfigIterNext . . . 1249
49.6.43 ESMF_HConfigLog . . . 1249

49.6.44 ESMF_HConfigMatch . . . 1250
49.6.45 ESMF_HConfigRemove . . . 1250
49.6.46 ESMF_HConfigSet . . . 1251
49.6.47 ESMF_HConfigSetMapKey . . . 1252
49.6.48 ESMF_HConfigSetMapVal . . . 1253
49.6.49 ESMF_HConfigValidateMapKeys . . . 1254

50 Log Class **1255**
50.1 Description . . . 1255
50.2 Constants . . . 1255
50.2.1 ESMF_LOGERR . . . 1255
50.2.2 ESMF_LOGKIND . . . 1256
50.2.3 ESMF_LOGMSG . . . 1256
50.3 Use and Examples . . . 1257
50.3.1 Default Log . . . 1258
50.3.2 User created Log . . . 1259
50.3.3 Get and Set . . . 1259
50.4 Restrictions and Future Work . . . 1260
50.5 Design and Implementation Notes . . . 1260
50.6 Object Model . . . 1261
50.7 Class API . . . 1261
50.7.1 ESMF_LogAssignment(=) . . . 1261
50.7.2 ESMF_LogOperator(==) . . . 1262
50.7.3 ESMF_LogOperator(/=) . . . 1262
50.7.4 ESMF_LogClose . . . 1263
50.7.5 ESMF_LogFlush . . . 1264
50.7.6 ESMF_LogFoundAllocError . . . 1264
50.7.7 ESMF_LogFoundDeallocError . . . 1265
50.7.8 ESMF_LogFoundError . . . 1266
50.7.9 ESMF_LogFoundNetCDFError . . . 1267
50.7.10 ESMF_LogGet . . . 1269
50.7.11 ESMF_LogOpen . . . 1270
50.7.12 ESMF_LogOpen . . . 1270
50.7.13 ESMF_LogSet . . . 1271
50.7.14 ESMF_LogSetError . . . 1272
50.7.15 ESMF_LogWrite . . . 1273

51 DELayout Class **1274**
51.1 Description . . . 1274
51.2 Constants . . . 1275
51.2.1 ESMF_PIN . . . 1275
51.2.2 ESMF_SERVICEREPLY . . . 1275
51.3 Use and Examples . . . 1276
51.3.1 Default DELayout . . . 1276
51.3.2 DELayout with specified number of DEs . . . 1277
51.3.3 DELayout with computational and communication weights . . . 1277
51.3.4 DELayout from petMap . . . 1277
51.3.5 DELayout from petMap with multiple DEs per PET . . . 1278
51.3.6 Working with a DELayout - simple 1-to-1 DE-to-PET mapping . . . 1278
51.3.7 Working with a DELayout - general DE-to-PET mapping . . . 1279
51.3.8 Work queue dynamic load balancing . . . 1279

51.4 Restrictions and Future Work . . . 1280
51.5 Design and Implementation Notes . . . 1280
51.6 Class API . . . 1280
51.6.1 ESMF_DELayoutAssignment(=) . . . 1280
51.6.2 ESMF_DELayoutOperator(==) . . . 1281
51.6.3 ESMF_DELayoutOperator(/=) . . . 1282
51.6.4 ESMF_DELayoutCreate . . . 1282
51.6.5 ESMF_DELayoutCreate . . . 1283
51.6.6 ESMF_DELayoutDestroy . . . 1284
51.6.7 ESMF_DELayoutGet . . . 1285
51.6.8 ESMF_DELayoutIsCreated . . . 1287
51.6.9 ESMF_DELayoutPrint . . . 1288
51.6.10 ESMF_DELayoutServiceComplete . . . 1288
51.6.11 ESMF_DELayoutServiceOffer . . . 1289
51.6.12 ESMF_DELayoutValidate . . . 1290

52 VM Class 1290
52.1 Description . . . 1290
52.2 Constants . . . 1291
52.2.1 ESMF_VMEPOCH . . . 1291
52.3 Use and Examples . . . 1292
52.3.1 Global VM . . . 1292
52.3.2 Current VM and Components . . . 1293
52.3.3 Accessing the MPI Communicator from a VM object . . . 1295
52.3.4 Using the MPI Communicator returned by ESMF with the Fortran 2008 MPI binding . . . 1295
52.3.5 Nesting ESMF inside a user MPI application . . . 1296
52.3.6 Nesting ESMF inside a user MPI application on a subset of MPI ranks . . . 1296
52.3.7 Nesting multiple concurrent instances of ESMF under separate MPI communicators . . . 1297
52.3.8 Controlling the MPI thread support level . . . 1298
52.3.9 Communication - Send and Recv . . . 1300
52.3.10 Communication - Scatter and Gather . . . 1301
52.3.11 Communication - AllReduce and AllFullReduce . . . 1301
52.3.12 Communication - Non-blocking option and VMEpochs . . . 1302
52.3.13 Using VM communication methods with data of rank greater than one . . . 1306
52.4 Restrictions and Future Work . . . 1307
52.5 Design and Implementation Notes . . . 1307
52.6 Class API . . . 1310
52.6.1 ESMF_VMAssignment(=) . . . 1310
52.6.2 ESMF_VMOperator(==) . . . 1311
52.6.3 ESMF_VMOperator(/=) . . . 1312
52.6.4 ESMF_VMAllFullReduce . . . 1312
52.6.5 ESMF_VMAllGather . . . 1313
52.6.6 ESMF_VMAllGatherV . . . 1315
52.6.7 ESMF_VMAllReduce . . . 1316
52.6.8 ESMF_VMAllToAll . . . 1317
52.6.9 ESMF_VMAllToAllV . . . 1318
52.6.10 ESMF_VMBarrier . . . 1319
52.6.11 ESMF_VMBroadcast . . . 1320
52.6.12 ESMF_VMCommWait . . . 1321
52.6.13 ESMF_VMCommWaitAll . . . 1322
52.6.14 ESMF_VMEpochEnter . . . 1322

52.6.15 ESMF_VMEpochExit . . . 1323
52.6.16 ESMF_VMGather . . . 1324
52.6.17 ESMF_VMGatherV . . . 1325
52.6.18 ESMF_VMGet . . . 1326
52.6.19 ESMF_VMGet . . . 1328
52.6.20 ESMF_VMGetGlobal . . . 1329
52.6.21 ESMF_VMGetCurrent . . . 1330
52.6.22 ESMF_VMIsCreated . . . 1331
52.6.23 ESMF_VMLog . . . 1332
52.6.24 ESMF_VMLogSystem . . . 1332
52.6.25 ESMF_VMPrint . . . 1333
52.6.26 ESMF_VMRecv . . . 1333
52.6.27 ESMF_VMReduce . . . 1334
52.6.28 ESMF_VMScatter . . . 1336
52.6.29 ESMF_VMScatterV . . . 1337
52.6.30 ESMF_VMSend . . . 1338
52.6.31 ESMF_VMSendRecv . . . 1339
52.6.32 ESMF_VMValidate . . . 1340
52.6.33 ESMF_VMWtime . . . 1341
52.6.34 ESMF_VMWtimeDelay . . . 1341
52.6.35 ESMF_VMWtimePrec . . . 1342

53 Profiling and Tracing 1342
53.1 Description . . . 1342
53.1.1 Profiling . . . 1342
53.1.2 Tracing . . . 1343
53.2 Use and Examples . . . 1344
53.2.1 Output a Timing Profile to Text . . . 1344
53.2.2 Summarize Timings across Multiple PETs . . . 1345
53.2.3 Limit the Set of Profiled PETs . . . 1347
53.2.4 Include MPI Communication in the Profile . . . 1347
53.2.5 Output a Detailed Trace for Analysis . . . 1349
53.2.6 Set the Clock used for Profiling/Tracing . . . 1350
53.2.7 Tracing a simple ESMF application . . . 1350
53.2.8 Profiling/Tracing User-defined Code Regions . . . 1353
53.3 Restrictions and Future Work . . . 1354
53.4 Class API . . . 1354
53.4.1 ESMF_TraceRegionEnter . . . 1354
53.4.2 ESMF_TraceRegionExit . . . 1354

54 Fortran I/O and System Utilities 1355
54.1 Description . . . 1355
54.2 Use and Examples . . . 1355
54.2.1 Fortran unit number management . . . 1355
54.2.2 Flushing output . . . 1356
54.3 Design and Implementation Notes . . . 1356
54.3.1 Fortran unit number management . . . 1356
54.3.2 Flushing output . . . 1357
54.3.3 Sorting algorithms . . . 1357
54.4 Utility API . . . 1357
54.4.1 ESMF_UtilGetArg . . . 1357

54.4.2 ESMF_UtilGetArgC . . . 1358
54.4.3 ESMF_UtilGetArgIndex . . . 1359
54.4.4 ESMF_UtilIOGetCWD . . . 1360
54.4.5 ESMF_UtilIOMkDir . . . 1360
54.4.6 ESMF_UtilIORmDir . . . 1361
54.4.7 ESMF_UtilString2Double . . . 1362
54.4.8 ESMF_UtilString2Int . . . 1362
54.4.9 ESMF_UtilString2Real . . . 1363
54.4.10 ESMF_UtilStringInt2String . . . 1364
54.4.11 ESMF_UtilStringLowerCase . . . 1364
54.4.12 ESMF_UtilStringUpperCase . . . 1365
54.4.13 ESMF_UtilIOUnitFlush . . . 1366
54.4.14 ESMF_UtilIOUnitGet . . . 1366
54.4.15 ESMF_UtilSort . . . 1367

VI References 1369

VII Appendices 1371

55 Appendix A: Master List of Constants 1371
55.1 ESMF_ALARMLIST . . . 1371
55.2 ESMF_DIM_ARB . . . 1371
55.3 ESMF_ATTCOPY . . . 1371
55.4 ESMF_ATTGETCOUNT . . . 1371
55.5 ESMF_ATTNEST . . . 1371
55.6 ESMF_ATTRECONCILE . . . 1371
55.7 ESMF_ATTWRITE . . . 1372
55.8 ESMF_CALKIND . . . 1372
55.9 ESMF_COMPTYPE . . . 1372
55.10 ESMF_CONTEXT . . . 1372
55.11 ESMF_COORDSYS . . . 1373
55.12 ESMF_CUBEDSPHERECALC . . . 1373
55.13 ESMF_DATACOPY . . . 1373
55.14 ESMF_DECOMP . . . 1374
55.15 ESMF_DIRECTION . . . 1374
55.16 ESMF_DISTGRIDMATCH . . . 1374
55.17 ESMF_END . . . 1374
55.18 ESMF_EXTRAPMETHOD . . . 1374
55.19 ESMF_FIELDSTATUS . . . 1375
55.20 ESMF_FILEFORMAT . . . 1375
55.21 ESMF_FILEMODE . . . 1376
55.22 ESMF_FILESTATUS . . . 1376
55.23 ESMF_GEOMTYPE . . . 1377
55.24 ESMF_GRIDCONN . . . 1377
55.25 ESMF_GRIDITEM . . . 1377
55.26 ESMF_GRIDMATCH . . . 1377
55.27 ESMF_GRIDSTATUS . . . 1377
55.28 ESMF_HCONFIGMATCH . . . 1377
55.29 ESMF_INDEX . . . 1377

55.30 ESMF_IOFMT . . . 1378
55.31 ESMF_IO_NETCDF_PRESENT . . . 1378
55.32 ESMF_IO_PIO_PRESENT . . . 1379
55.33 ESMF_IO_PNETCDF_PRESENT . . . 1379
55.34 ESMF_ITEMORDER . . . 1379
55.35 ESMF_KIND . . . 1379
55.36 ESMF_LINETYPE . . . 1380
55.37 ESMF_LOGERR . . . 1380
55.38 ESMF_LOGKIND . . . 1381
55.39 ESMF_LOGMSG . . . 1381
55.40 ESMF_MESHELEMTYPE . . . 1381
55.41 ESMF_MESHLOC . . . 1381
55.42 ESMF_MESHOP . . . 1381
55.43 ESMF_MESHSTATUS . . . 1381
55.44 ESMF_METHOD . . . 1382
55.45 ESMF_NORMTYPE . . . 1382
55.46 ESMF_PIN . . . 1383
55.47 ESMF_POLEKIND . . . 1383
55.48 ESMF_POLEMETHOD . . . 1383
55.49 ESMF_REDUCE . . . 1384
55.50 ESMF_REGION . . . 1384
55.51 ESMF_REGRIDMETHOD . . . 1384
55.52 ESMF_REGRIDSTATUS . . . 1385
55.53 ESMF_ROUTESYNC . . . 1386
55.54 ESMF_SERVICEREPLY . . . 1387
55.55 ESMF_STAGGERLOC . . . 1387
55.56 ESMF_STARTREGION . . . 1387
55.57 ESMF_STATEINTENT . . . 1387
55.58 ESMF_STATEITEM . . . 1387
55.59 ESMF_SYNC . . . 1387
55.60 ESMF_TERMORDER . . . 1389
55.61 ESMF_TYPEKIND . . . 1389
55.62 ESMF_UNMAPPEDACTION . . . 1390
55.63 ESMF_VERSION . . . 1390
55.64 ESMF_VMEPOCH . . . 1390
55.65 ESMF_XGRIDSIDE . . . 1390

56 Appendix B: A Brief Introduction to UML 1391

57 Appendix C: ESMF Error Return Codes 1392

58 Appendix D: Attribute Class Legacy API 1395
58.1 Constants . . . 1395
58.1.1 ESMF_ATTCOPY . . . 1395
58.1.2 ESMF_ATTGETCOUNT . . . 1395
58.1.3 ESMF_ATTWRITE . . . 1396
58.2 Class API . . . 1396
58.2.1 ESMF_AttributeAdd . . . 1396
58.2.2 ESMF_AttributeAdd . . . 1397
58.2.3 ESMF_AttributeCopy . . . 1399
58.2.4 ESMF_AttributeGet . . . 1400

58.2.5 ESMF_AttributeGet 1401
58.2.6 ESMF_AttributeGet 1403
58.2.7 ESMF_AttributeGet 1405
58.2.8 ESMF_AttributeGet 1407
58.2.9 ESMF_AttributeGet 1408
58.2.10 ESMF_AttributeGet 1409
58.2.11 ESMF_AttributeGet 1411
58.2.12 ESMF_AttributeGet 1412
58.2.13 ESMF_AttributeGetAttPack 1414
58.2.14 ESMF_AttributeRemove 1415
58.2.15 ESMF_AttributeRemove 1416
58.2.16 ESMF_AttributeSet 1418
58.2.17 ESMF_AttributeSet 1419
58.2.18 ESMF_AttributeSet 1421
58.2.19 ESMF_AttributeSet 1422
58.2.20 ESMF_AttributeUpdate 1424

Part I

ESMF Overview

1 What is the Earth System Modeling Framework?

The Earth System Modeling Framework (ESMF) is a suite of software tools for developing high-performance, multi-component Earth science modeling applications. Such applications may include a few or dozens of components representing atmospheric, oceanic, terrestrial, or other physical domains, and their constituent processes (dynamical, chemical, biological, etc.). Often these components are developed by different groups independently, and must be "coupled" together using software that transfers and transforms data among the components in order to form functional simulations.

ESMF supports the development of these complex applications in a number of ways. It introduces a set of simple, consistent component interfaces that apply to all types of components, including couplers themselves. These interfaces expose in an obvious way the inputs and outputs of each component. It offers a variety of data structures for transferring data between components, and libraries for regridding, time advancement, and other common modeling functions. Finally, it provides a growing set of tools for using metadata to describe components and their input and output fields. This capability is important because components that are self-describing can be integrated more easily into automated workflows, model and dataset distribution and analysis portals, and other emerging "semantically enabled" computational environments.

ESMF is not a single Earth system model into which all components must fit, and its distribution doesn't contain any scientific code. Rather it provides a way of structuring components so that they can be used in many different user-written applications and contexts with minimal code modification, and so they can be coupled together in new configurations with relative ease. The idea is to create many components across a broad community, and so to encourage new collaborations and combinations.

ESMF offers the flexibility needed by this diverse user base. It is tested nightly on more than two dozen platform/compiler combinations; can be run on one processor or thousands; supports shared and distributed memory programming models and a hybrid model; can run components sequentially (on all the same processors) or concurrently (on mutually exclusive processors); and supports single executable or multiple executable modes.

ESMF's generality and breadth of function can make it daunting for the novice user. To help users navigate the software, we try to apply consistent names and behavior throughout and to provide many examples. The large-scale structure of the software is straightforward. The utilities and data structures for building modeling components are called the ESMF *infrastructure*. The coupling interfaces and drivers are called the *superstructure*. User code sits between these two layers, making calls to the infrastructure libraries underneath and being scheduled and synchronized by the superstructure above. The configuration resembles a sandwich, as shown in Figure 1.

ESMF users may choose to extensively rewrite their codes to take advantage of the ESMF infrastructure, or they may decide to simply wrap their components in the ESMF superstructure in order to utilize framework coupling services. Either way, we encourage users to contact our support team if questions arise about how to best use the software, or how to structure their application. ESMF is more than software; it's a group of people dedicated to realizing the vision of a collaborative model development community that spans institutional and national bounds.

2 The ESMF Reference Manual for Fortran

ESMF has a complete set of Fortran interfaces and some C interfaces. This *ESMF Reference Manual* is a listing of ESMF interfaces for Fortran.[1]

Interfaces are grouped by class. A class is comprised of the data and methods for a specific concept like a physical field. Superstructure classes are listed first in this *Manual*, followed by infrastructure classes.

[1] Since the customer base for it is small, we have not yet prepared a comprehensive reference manual for C.

Figure 1: Schematic of the ESMF "sandwich" architecture. The framework consists of two parts, an upper level **superstructure** layer and a lower level **infrastructure** layer. User code is sandwiched between these two layers.

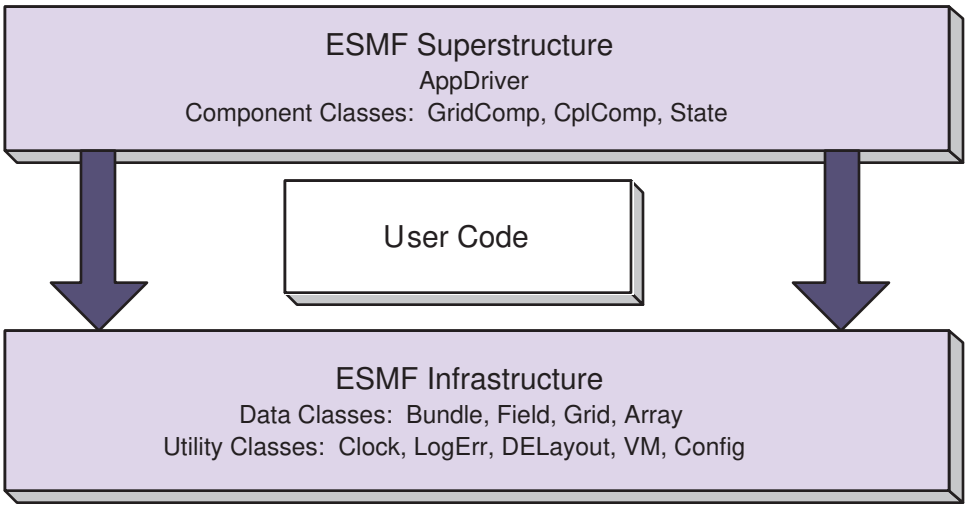

The major classes in the ESMF superstructure are Components, which usually represent large pieces of functionality such as atmosphere and ocean models, and States, which are the data structures used to transfer data between Components. There are both data structures and utilities in the ESMF infrastructure. Data structures include multi-dimensional Arrays, Fields that are comprised of an Array and a Grid, and collections of Arrays and Fields called ArrayBundles and FieldBundles, respectively. There are utility libraries for data decomposition and communications, time management, logging and error handling, and application configuration.

3 How to Contact User Support and Find Additional Information

The ESMF team can answer questions about the interfaces presented in this document. For user support, please contact esmf_support@ucar.edu.

The website, http://www.earthsystemmodeling.org, provide more information of the ESMF project as a whole. The website includes release notes and known bugs for each version of the framework, supported platforms, project history, values, and metrics, related projects, the ESMF management structure, and more. The *ESMF User's Guide* contains build and installation instructions, an overview of the ESMF system and a description of how its classes interrelate (this version of the document corresponds to the last public version of the framework). Also available on the ESMF website is the *ESMF Developer's Guide* that details ESMF procedures and conventions.

4 How to Submit Comments, Bug Reports, and Feature Requests

We welcome input on any aspect of the ESMF project. Send questions and comments to esmf_support@ucar.edu.

5 Conventions

5.1 Typeface and Diagram Conventions

The following conventions for fonts and capitalization are used in this and other ESMF documents.

Style	Meaning	Example
italics	documents	*ESMF Reference Manual*
`courier`	code fragments	`ESMF_TRUE`
`courier()`	ESMF method name	`ESMF_FieldGet()`
boldface	first definitions	An **address space** is ...
boldface	web links and tabs	**Developers** tab on the website
Capitals	ESMF class name	DataMap

ESMF class names frequently coincide with words commonly used within the Earth system domain (field, grid, component, array, etc.) The convention we adopt in this manual is that if a word is used in the context of an ESMF class name it is capitalized, and if the word is used in a more general context it remains in lower case. We would write, for example, that an ESMF Field class represents a physical field.

Diagrams are drawn using the Unified Modeling Language (UML). UML is a visual tool that can illustrate the structure of classes, define relationships between classes, and describe sequences of actions. A reader interested in more detail can refer to a text such as *The Unified Modeling Language Reference Manual.* [29]

5.2 Method Name and Argument Conventions

Method names begin with `ESMF_`, followed by the class name, followed by the name of the operation being performed. Each new word is capitalized. Although Fortran interfaces are not case-sensitive, we use case to help parse multi-word names.

For method arguments that are multi-word, the first word is lower case and subsequent words begin with upper case. ESMF class names (including typed flags) are an exception. When multi-word class names appear in argument lists, all letters after the first are lower case. The first letter is lower case if the class is the first word in the argument and upper case otherwise. For example, in an argument list the DELayout class name may appear as `delayout` or `srcDelayout`.

Most Fortran calls in the ESMF are subroutines, with any returned values passed through the interface. For the sake of convenience, some ESMF calls are written as functions.

A typical ESMF call looks like this:

```
call ESMF_<ClassName><Operation>(classname, firstArgument,
           secondArgument, ..., rc)
```

where
`<ClassName>` is the class name,
`<Operation>` is the name of the action to be performed,
`classname` is a variable of the derived type associated with the class,
the `arg*` arguments are whatever other variables are required for the operation,
and `rc` is a return code.

6 The ESMF Application Programming Interface

The ESMF Application Programming Interface (API) is based on the object-oriented programming concept of a **class**. A class is a software construct that is used for grouping a set of related variables together with the subroutines and functions that operate on them. We use classes in ESMF because they help to organize the code, and often make it easier to maintain and understand. A particular instance of a class is called an **object**. For example, Field is an ESMF class. An actual Field called `temperature` is an object. That is about as far as we will go into software engineering terminology.

The Fortran interface is implemented so that the variables associated with a class are stored in a derived type. For example, an `ESMF_Field` derived type stores the data array, grid information, and metadata associated with a physical field. The derived type for each class is stored in a Fortran module, and the operations associated with each class are defined as module procedures. We use the Fortran features of generic functions and optional arguments extensively to simplify our interfaces.

The modules for ESMF are bundled together and can be accessed with a single `USE` statement, `USE ESMF`.

6.1 Standard Methods and Interface Rules

ESMF defines a set of standard methods and interface rules that hold across the entire API. These are:

- `ESMF_<Class>Create()` and `ESMF_<Class>Destroy()`, for creating and destroying objects of ESMF classes that require internal memory management (- called ESMF deep classes). The `ESMF_<Class>Create()` method allocates memory for the object itself and for internal variables, and initializes variables where appropriate. It is always written as a Fortran function that returns a derived type instance of the class, i.e. an object.
- `ESMF_<Class>Set()` and `ESMF_<Class>Get()`, for setting and retrieving a particular item or flag. In general, these methods are overloaded for all cases where the item can be manipulated as a name/value pair. If identifying the item requires more than a name, or if the class is of sufficient complexity that overloading in this way would result in an overwhelming number of options, we define specific `ESMF_<Class>Set<Something>()` and `ESMF_<Class>Get<Something>()` interfaces.
- `ESMF_<Class>Add()`, `ESMF_<Class>AddReplace()`, `ESMF_<Class>Remove()`, and `ESMF_<Class>Replace()`, for manipulating objects of ESMF container classes - such as `ESMF_State` and `ESMF_FieldBundle`. For example, the `ESMF_FieldBundleAdd()` method adds another Field to an existing FieldBundle object.
- `ESMF_<Class>Print()`, for printing the contents of an object to standard out. This method is mainly intended for debugging.
- `ESMF_<Class>ReadRestart()` and `ESMF_<Class>WriteRestart()`, for saving the contents of a class and restoring it exactly. Read and write restart methods have not yet been implemented for most ESMF classes, so where necessary the user needs to write restart values themselves.
- `ESMF_<Class>Validate()`, for determining whether a class is internally consistent. For example, `ESMF_FieldValidate()` validates the internal consistency of a Field object.

6.2 Deep and Shallow Classes

ESMF contains two types of classes.

Deep classes require `ESMF_<Class>Create()` and `ESMF_<Class>Destroy()` calls. They involve memory allocation, take significant time to set up (due to memory management) and should not be created in a time-critical portion of code. Deep objects persist even after the method in which they were created has returned. Most classes in ESMF, including GridComp, CplComp, State, Fields, FieldBundles, Arrays, ArrayBundles, Grids, and Clocks, fall into this category.

Shallow classes do not possess `ESMF_<Class>Create()` and `ESMF_<Class>Destroy()` calls. They are simply declared and their values set using an `ESMF_<Class>Set()` call. Examples of shallow classes are Time, TimeInterval, and ArraySpec. Shallow classes do not take long to set up and can be declared and set within a time-critical code segment. Shallow objects stop existing when execution goes out of the declaring scope.

An exception to this is when a shallow object, such as a Time, is stored in a deep object such as a Clock. The deep Clock object then becomes the declaring scope of the Time object, persisting in memory. The Time object is deallocated with the `ESMF_ClockDestroy()` call.

See Section 9, Overall Design and Implementation Notes, for a brief discussion of deep and shallow classes from an implementation perspective. For an in-depth look at the design and inter-language issues related to deep and shallow classes, see the *ESMF Implementation Report*.

6.3 Aliases and Named Aliases

Deep objects, i.e. instances of ESMF deep classes created by the appropriate `ESMF_<Class>Create()`, can be used with the standard assignment (=), equality (==), and not equal (/=) operators.

The assignment

```
deep2 = deep1
```

makes `deep2` an **alias** of `deep1`, meaning that both variables reference the same deep allocation in memory. Many aliases of the same deep object can be created.

All the aliases of a deep object are equivalent. In particular, there is no distinction between the variable on the left hand side of the actual `ESMF_<Class>Create()` call, and any aliases created from it. All actions taken on any of the aliases of a deep object affect the deep object, and thus all other aliases.

The equality and not equal operators for deep objects are implemented as simple alias checks. For a more general comparison of two distinct deep objects, a deep class might provide the `ESMF_<Class>Match()` method.

ESMF provides the concept of a **named alias**. A named alias behaves just like an alias in all aspects, except when it comes to setting and getting the *name* of the deep object it is associated with. While regular aliases all access the same name string in the actual deep object, a named alias keeps its private name string. This allows the same deep object to be known under a different name in different contexts.

The assignment

```
deep2 = ESMF_NamedAlias(deep1)
```

makes `deep2` a **named alias** of `deep1`. Any *name* changes on `deep2` only affect `deep2`. However, the *name* retrieved from `deep1`, or from any regular aliases created from `deep1`, is unaffected.

Notice that aliases generated from a named alias are again named aliases. This is true even when using the regular assignment operator with a named alias on the right hand side. Named aliases own their unique name string that cannot be accessed or altered through any other alias.

6.3.1 ESMF_NamedAlias - Generate a Named Alias

INTERFACE:

```
function ESMF_NamedAlias(object, name, rc)
```

RETURN VALUE:

```
type(ESMF_*)        :: ESMF_NamedAlias
```

ARGUMENTS:

```
type(ESMF_*),       intent(in)            :: object
character(len = *), intent(in),  optional :: name
integer,            intent(out), optional :: rc
```

DESCRIPTION:

Generate a named alias to `object`. The supported classes are:

- `ESMF_State`
- `ESMF_GridComp`
- `ESMF_CplComp`
- `ESMF_SciComp`
- `ESMF_FieldBundle`
- `ESMF_Field`
- `ESMF_ArrayBundle`
- `ESMF_Array`

The arguments are:

object The incoming object for which a named alias is generated.

[name] The name of the named alias. By default use the name of `object`.

[rc] Return code; equals `ESMF_SUCCESS` if there are no errors.

6.4 Special Methods

The following are special methods which, in one case, are required by any application using ESMF, and in the other case must be called by any application that is using ESMF Components.

- `ESMF_Initialize()` and `ESMF_Finalize()` are required methods that must bracket the use of ESMF within an application. They manage the resources required to run ESMF and shut it down gracefully. ESMF does not support restarts in the same executable, i.e. `ESMF_Initialize()` should not be called after `ESMF_Finalize()`.

- ESMF_<Type>CompInitialize(), ESMF_<Type>CompRun(), and ESMF_<Type>CompFinalize() are component methods that are used at the highest level within ESMF. <Type> may be <Grid>, for Gridded Components such as oceans or atmospheres, or <Cpl>, for Coupler Components that are used to connect them. The content of these methods is not part of the ESMF. Instead the methods call into associated subroutines within user code.

6.5 The ESMF Data Hierarchy

The ESMF API is organized around a hierarchy of classes that contain model data. The operations that are performed on model data, such as regridding, redistribution, and halo updates, are methods of these classes.

The main data classes in ESMF, in order of increasing complexity, are:

- **Array** An ESMF Array is a distributed, multi-dimensional array that can carry information such as its type, kind, rank, and associated halo widths. It contains a reference to a native Fortran array.
- **ArrayBundle** An ArrayBundle is a collection of Arrays, not necessarily distributed in the same manner. It is useful for performing collective data operations and communications.
- **Field** A Field represents a physical scalar or vector field. It contains a reference to an Array along with grid information and metadata.
- **FieldBundle** A FieldBundle is a collection of Fields discretized on the same grid. The staggering of data points may be different for different Fields within a FieldBundle. Like the ArrayBundle, it is useful for performing collective data operations and communications.
- **State** A State represents the collection of data that a Component either requires to run (an Import State) or can make available to other Components (an Export State). States may contain references to Arrays, ArrayBundles, Fields, FieldBundles, or other States.
- **Component** A Component is a piece of software with a distinct function. ESMF currently recognizes two types of Components. Components that represent a physical domain or process, such as an atmospheric model, are called Gridded Components since they are usually discretized on an underlying grid. The Components responsible for regridding and transferring data between Gridded Components are called Coupler Components. Each Component is associated with an Import and an Export State. Components can be nested so that simpler Components are contained within more complex ones.

Underlying these data classes are native language arrays. ESMF allows you to reference an existing Fortran array to an ESMF Array or Field so that ESMF data classes can be readily introduced into existing code. You can perform communication operations directly on Fortran arrays through the VM class, which serves as a unifying wrapper for distributed and shared memory communication libraries.

6.6 ESMF Spatial Classes

Like the hierarchy of model data classes, ranging from the simple to the complex, ESMF is organized around a hierarchy of classes that represent different spaces associated with a computation. Each of these spaces can be manipulated, in order to give the user control over how a computation is executed. For Earth system models, this hierarchy starts with the address space associated with the computer and extends to the physical region described by the application. The main spatial classes in ESMF, from those closest to the machine to those closest to the application, are:

- The **Virtual Machine**, or **VM** The ESMF VM is an abstraction of a parallel computing environment that encompasses both shared and distributed memory, single and multi-core systems. Its primary purpose is resource allocation and management. Each Component runs in its own VM, using the resources it defines. The elements of a VM are **Persistent Execution Threads**, or **PETs**, that are executing in **Virtual Address Spaces**, or **VASs**. A simple case is one in which every PET is associated with a single MPI process. In this case every PET is executing in its own private VAS. If Components are nested, the parent component allocates a subset of its PETs to its children. The children have some flexibility, subject to the constraints of the computing environment, to decide how they want to use the resources associated with the PETs they've received.

- **DELayout** A DELayout represents a data decomposition (we also refer to this as a distribution). Its basic elements are **Decomposition Elements**, or **DEs**. A DELayout associates a set of DEs with the PETs in a VM. DEs are not necessarily one-to-one with PETs. For cache blocking, or user-managed multi-threading, more DEs than PETs may be defined. Fewer DEs than PETs may also be defined if an application requires it.

- **DistGrid** A DistGrid represents the index space associated with a grid. It is a useful abstraction because often a full specification of grid coordinates is not necessary to define data communication patterns. The DistGrid contains information about the sequence and connectivity of data points, which is sufficient information for many operations. Arrays are defined on DistGrids.

- **Array** An Array defines how the index space described in the DistGrid is associated with the VAS of each PET. This association considers the type, kind and rank of the indexed data. Fields are defined on Arrays.

- **Grid** A Grid is an abstraction for a logically rectangular region in physical space. It associates a coordinate system, a set of coordinates, and a topology to a collection of grid cells. Grids in ESMF are comprised of DistGrids plus additional coordinate information.

- **Mesh** A Mesh provides an abstraction for an unstructured grid. Coordinate information is set in nodes, which represent vertices or corners. Together the nodes establish the boundaries of mesh elements or cells.

- **LocStream** A LocStream is an abstraction for a set of unstructured data points without any topological relationship to each other.

- **Field** A Field may contain more dimensions than the Grid that it is discretized on. For example, for convenience during integration, a user may want to define a single Field object that holds snapshots of data at multiple times. Fields also keep track of the stagger location of a Field data point within its associated Grid cell.

6.7 ESMF Maps

In order to define how the index spaces of the spatial classes relate to each other, we require either implicit rules (in which case the relationship between spaces is defined by default), or special Map arrays that allow the user to specify the desired association. The form of the specification is usually that the position of the array element carries information about the first object, and the value of the array element carries information about the second object. ESMF includes a `distGridToArrayMap`, a `gridToFieldMap`, a `distGridToGridMap`, and others.

6.8 ESMF Specification Classes

It can be useful to make small packets of descriptive parameters. ESMF has one of these:

- **ArraySpec**, for storing the specifics, such as type/kind/rank, of an array.

6.9 ESMF Utility Classes

There are a number of utilities in ESMF that can be used independently. These are:

- **Attributes**, for storing metadata about Fields, FieldBundles, States, and other classes.
- **TimeMgr**, for calendar, time, clock and alarm functions.
- **LogErr**, for logging and error handling.
- **Config**, for creating resource files that can replace namelists as a consistent way of setting configuration parameters.

7 Integrating ESMF into Applications

Depending on the requirements of the application, the user may want to begin integrating ESMF in either a top-down or bottom-up manner. In the top-down approach, tools at the superstructure level are used to help reorganize and structure the interactions among large-scale components in the application. It is appropriate when interoperability is a primary concern; for example, when several different versions or implementations of components are going to be swapped in, or a particular component is going to be used in multiple contexts. Another reason for deciding on a top-down approach is that the application contains legacy code that for some reason (e.g., intertwined functions, very large, highly performance-tuned, resource limitations) there is little motivation to fully restructure. The superstructure can usually be incorporated into such applications in a way that is non-intrusive.

In the bottom-up approach, the user selects desired utilities (data communications, calendar management, performance profiling, logging and error handling, etc.) from the ESMF infrastructure and either writes new code using them, introduces them into existing code, or replaces the functionality in existing code with them. This makes sense when maximizing code reuse and minimizing maintenance costs is a goal. There may be a specific need for functionality or the component writer may be starting from scratch. The calendar management utility is a popular place to start.

7.1 Using the ESMF Superstructure

The following is a typical set of steps involved in adopting the ESMF superstructure. The first two tasks, which occur before an ESMF call is ever made, have the potential to be the most difficult and time-consuming. They are the work of splitting an application into components and ensuring that each component has well-defined stages of execution. ESMF aside, this sort of code structure helps to promote application clarity and maintainability, and the effort put into it is likely to be a good investment.

1. Decide how to organize the application as discrete Gridded and Coupler Components. This might involve reorganizing code so that individual components are cleanly separated and their interactions consist of a minimal number of data exchanges.
2. Divide the code for each component into initialize, run, and finalize methods. These methods can be multi-phase, e.g., `init_1, init_2`.
3. Pack any data that will be transferred between components into ESMF Import and Export State data structures. This is done by first wrapping model data in either ESMF Arrays or Fields. Arrays are simpler to create and use than Fields, but carry less information and have a more limited range of operations. These Arrays and Fields are then added to Import and Export States. They may be packed into ArrayBundles or FieldBundles first, for more efficient communications. Metadata describing the model data can also be added. At the end of this step, the data to be transferred between components will be in a compact and largely self-describing form.

4. Pack time information into ESMF time management data structures.
5. Using code templates provided in the ESMF distribution, create ESMF Gridded and Coupler Components to represent each component in the user code.
6. Write a set services routine that sets ESMF entry points for each user component's initialize, run, and finalize methods.
7. Run the application using an ESMF Application Driver.

8 Overall Rules and Behavior

8.1 Return Code Handling

All ESMF methods pass a *return code* back to the caller via the `rc` argument. If no errors are encountered during the method execution, a value of `ESMF_SUCCESS` is returned. Otherwise one of the predefined error codes is returned to the caller. See the appendix, section 57, for a full list of the ESMF error return codes.

Any code calling an ESMF method must check the return code. If `rc` is not equal to `ESMF_SUCCESS`, the calling code is expected to break out of its execution and pass the `rc` to the next level up. All ESMF errors are to be handled as *fatal*, i.e. the calling code must *bail-on-all-errors*.

ESMF provides a number of methods, described under section 50, that make implementation of the bail-on-all-errors stategy more convenient. Consistent use of these methods will ensure that a full back trace is generated in the ESMF log output whenever an error condition is triggered.

Note that in ESMF requesting not present information, e.g. via a `Get()` method, will trigger an error condition. Combined with the bail-on-all-errors strategy this has the advantage of producing an error trace pointing to the earliest location in the code that attempts to access unavailable information. In cases where the calling side is able to handle the presence or absence of certain pieces of of information, the code first must query for the resepctive `isPresent` argument. If this argument comes back as `.true.` it is safe to query for the actual information.

8.2 Local and Global Views and Associated Conventions

ESMF data objects such as Fields are distributed over DEs, with each DE getting a portion of the data. Depending on the task, a local or global view of the object may be preferable. In a local view, data indices start with the first element on the DE and end with the last element on the same DE. In a global view, there is an assumed or specified order to the set of DEs over which the object is distributed. Data indices start with the first element on the first DE, and continue across all the elements in the sequence of DEs. The last data index represents the number of elements in the entire object. The DistGrid provides the mapping between local and global data indices.

The convention in ESMF is that entities with a global view have no prefix. Entities with a DE-local (and in some cases, PET-local) view have the prefix "local."

Just as data is distributed over DEs, DEs themselves can be distributed over PETs. This is an advanced feature for users who would like to create multiple local chunks of data, for algorithmic or performance reasons. Local DEs are those DEs that are located on the local PET. Local DE labeling always starts at 0 and goes to localDeCount-1, where localDeCount is the number of DEs on the local PET. Global DE numbers also start at 0 and go to deCount-1. The DELayout class provides the mapping between local and global DE numbers.

8.3 Allocation Rules

The basic rule of allocation and deallocation for the ESMF is: whoever allocates it is responsible for deallocating it.

ESMF methods that allocate their own space for data will deallocate that space when the object is destroyed. Methods which accept a user-allocated buffer, for example `ESMF_FieldCreate()` with the `ESMF_DATACOPY_REFERENCE` flag, will not deallocate that buffer at the time the object is destroyed. The user must deallocate the buffer when all use of it is complete.

Classes such as Fields, FieldBundles, and States may have Arrays, Fields, Grids and FieldBundles created externally and associated with them. These associated items are not destroyed along with the rest of the data object since it is possible for the items to be added to more than one data object at a time (e.g. the same Grid could be part of many Fields). It is the user's responsibility to delete these items when the last use of them is done.

8.4 Assignment, Equality, Copying and Comparing Objects

The equal sign assignment has not been overloaded in ESMF, thus resulting in the standard Fortran behavior. This behavior has been documented as the first entry in the API documentation section for each ESMF class. For deep ESMF objects the assignment results in setting an alias the the same ESMF object in memory. For shallow ESMF objects the assignment is essentially a equivalent to a copy of the object. For deep classes the equality operators have been overloaded to test for the alias condition as a counter part to the assignment behavior. This and the not equal operator are documented following the assignment in the class API documentation sections.

Deep object copies are implemented as a special variant of the `ESMF_<Class>Create()` methods. It takes an existing deep object as one of the required arguments. At this point not all deep classes have `ESMF_<Class>Create()` methods that allow object copy.

Due to the complexity of deep classes there are many aspects when comparing two objects of the same class. ESMF provide `ESMF_<Class>Match()` methods, which are functions that return a class specific match flag. At this point not all deep classes have `ESMF_<Class>Match()` methods that allow deep object comparison.

8.5 Attributes

Attributes are (name, value) pairs, where the name is a character string and the value can be either a single value or list of `integer`, `real`, `double precision`, `logical`, or `character` values. Attributes can be associated with Fields, FieldBundles, and States. Mixed types are not allowed in a single attribute, and all attribute names must be unique within a single object. Attributes are set by name, and can be retrieved either directly by name or by querying for a count of attributes and retrieving names and values by index number.

8.6 Constants

Named constants are used throughout ESMF to specify the values of many arguments with multiple well defined values in a consistent way. These constants are defined by a derived type that follows this pattern:

```
ESMF_<CONSTANT_NAME>_Flag
```

The values of the constant are then specified by this pattern:

```
ESMF_<CONSTANT_NAME>_<VALUE1>
```

```
ESMF_<CONSTANT_NAME>_<VALUE2>
ESMF_<CONSTANT_NAME>_<VALUE3>
...
```

A master list of all available constants can be found in section 55.

9 Overall Design and Implementation Notes

1. **Deep and shallow classes.** The deep and shallow classes described in Section 6.2 differ in how and where they are allocated within a multi-language implementation environment. We distinguish between the implementation language, which is the language a method is written in, and the calling language, which is the language that the user application is written in. Deep classes are allocated off the process heap by the implementation language. Shallow classes are allocated off the stack by the calling language.

2. **Base class.** All ESMF classes are built upon a Base class, which holds a small set of system-wide capabilities.

10 Overall Restrictions and Future Work

1. **32-bit integer limitations.** In general, Fortran array bounds should be limited to 2**31-1 elements or less. This is due to the Fortran-95 limitation of returning default sized (e.g., 32 bit) integers for array bound and size inquiries, and consequent ESMF use of default sized integers for holding these values.

Part II

Command Line Tools

The main product delivered by ESMF is the ESMF library that allows application developers to write programs based on the ESMF API. In addition to the programming library, ESMF distributions come with a small set of command line tools (CLT) that are of general interest to the community. These CLTs utilize the ESMF library to implement features such as printing general information about the ESMF installation, or generating regrid weight files. The provided ESMF CLTs are intended to be used as standard command line tools.

The bundled ESMF CLTs are built and installed during the usual ESMF installation process, which is described in detail in the ESMF User's Guide section "Building and Installing the ESMF". After installation, the CLTs will be located in the `ESMF_APPSDIR` directory, which can be found as a Makefile variable in the `esmf.mk` file. The `esmf.mk` file can be found in the `ESMF_INSTALL_LIBDIR` directory after a successful installation. The ESMF User's Guide discusses the `esmf.mk` mechanism to access the bundled CLTs in more detail in section "Using Bundled ESMF Command Line Tools".

The following sections provide in-depth documentation of the bundled ESMF CLTs. In addition, each tool supports the standard `--help` command line argument, providing a brief description of how to invoke the program.

11 ESMF_PrintInfo

11.1 Description

The `ESMF_PrintInfo` command line tool that prints basic information about the ESMF installation to `stdout`.

The command line tool usage is as follows:

```
ESMF_PrintInfo  [--help]

where
  --help     prints a brief usage message
```

‘

12 ESMF_RegridWeightGen

12.1 Description

This section describes the offline regrid weight generation application provided by ESMF (for a description of ESMF regridding in general see Section 25.2). Regridding, also called remapping or interpolation, is the process of changing the grid that underlies data values while preserving qualities of the original data. Different kinds of transformations are appropriate for different problems. Regridding may be needed when communicating data between Earth system model components such as land and atmosphere, or between different data sets to support operations such as visualization.

Regridding can be broken into two stages. The first stage is generation of an interpolation weight matrix that describes how points in the source grid contribute to points in the destination grid. The second stage is the multiplication of values on the source grid by the interpolation weight matrix to produce values on the destination grid. This is implemented as a parallel sparse matrix multiplication.

There are two options for accessing ESMF regridding functionality: integrated and offline. Integrated regridding is a process whereby interpolation weights are generated via subroutine calls during the execution of the user's code. The integrated regridding can also perform the parallel sparse matrix multiplication. In other words, ESMF integrated regridding allows a user to perform the whole process of interpolation within their code. For a further description of ESMF integrated regridding please see Section 27.3.25. In contrast to integrated regridding, offline regridding is a process whereby interpolation weights are generated by a separate ESMF command line tool, not within the user code. The ESMF offline regridding tool also only generates the interpolation matrix, the user is responsible for reading in this matrix and doing the actual interpolation (multiplication by the sparse matrix) in their code. The rest of this section further describes ESMF offline regridding.

For a discussion of installing and accessing ESMF command line tools such as this one please see the beginning of this part of the reference manual (Section II) or for the quickest approach to just building and accessing the command line tools please refer to the "Building and using bundled ESMF Command Line Tools" Section in the ESMF User's Guide.

This application requires the NetCDF library to read the grid files and to write out the weight files in NetCDF format. To compile ESMF with the NetCDF library, please refer to the "Third Party Libraries" Section in the ESMF User's Guide for more information.

As described above, this tool reads in two grid files and outputs weights for interpolation between the two grids. The input and output files are all in NetCDF format. The grid files can be defined in five different formats: the SCRIP format 12.8.1 as is used as an input to SCRIP [13], the CF convension single-tile grid file 12.8.3 following the CF metadata conventions, the GRIDSPEC Mosaic file 12.8.5 following the proposed GRIDSPEC standard, the ESMF unstructured grid format 12.8.2 or the proposed CF unstructured grid data model (UGRID) 12.8.4. GRIDSPEC is a proposed CF extension for the annotation of complex Earth system grids. In the latest ESMF library, we added support for multi-tile GRIDSPEC Mosaic file with non-overlapping tiles. For UGRID, we support the 2D flexible mesh topology with mixed triangles and quadrilaterals and fully 3D unstructured mesh topology with hexahedrons and tetrahedrons.

The `ESMF_RegridWeightGen` command line tool can detect the type of the input grid files automatically, so the specification of source and destination grid file type arguments is optional. However, these arguments (`-t`, `--src_type` or `--dst_type`) can be provided to override the auto-detection. If not explicitly specified, the rule to determine the file format is the following:

- ESMF_FILEFORMAT_UGRID: a variable with attribute "cf_role" or "standard_name" set to "mesh_topology"
- ESMF_FILEFORMAT_MOSAIC: a variable with attribute "standard_name" set to "grid_mosaic_spec"
- ESMF_FILEFORMAT_TILE: a varilable with attribute "standard_name" set to "grid_tile_spec"
- ESMF_FILEFORMAT_ESMFMESH: variables nodeCoords and elementConn exist
- ESMF_FILEFORMAT_SCRIP: variables grid_corner_lon and grid_corner_lat exist
- ESMF_FILEFORMAT_CFGRID: variables with attributes "degree_north" and "degree_east" (or similar) exist, and other formats aren't matched

This command line tool can do regrid weight generation from a global or regional source grid to a global or regional destination grid. As is true with many global models, this application currently assumes the latitude and longitude

values refer to positions on a perfect sphere, as opposed to a more complex and accurate representation of the Earth's true shape such as would be used in a GIS system. (ESMF's current user base doesn't require this level of detail in representing the Earth's shape, but it could be added in the future if necessary.)

The interpolation weights generated by this application are output to a NetCDF file (specified by the "-w" or "−−weight" keywords). Two type of weight files are supported: the SCRIP format is the same as that generated by SCRIP, see Section 12.9 for a description of the format; and a simple weight file containing only the weights and the source and destination grid indices (In ESMF term, these are the `factorList` and `factorIndexList` generated by the ESMF weight calculation function `ESMF_FieldRegridStore()`. Note that the sequence of the weights in the file can vary with the number of processors used to run the application. This means that two weight files generated by using different numbers of processors can contain exactly the same interpolation matrix, but can appear different in a direct line by line comparison (such as would be done by ncdiff). The interpolation weights can be generated with the bilinear, patch, nearest neighbor, first-order conservative, or second-order conservative methods described in Section 12.3.

Internally this application uses the ESMF public API to generate the interpolation weights. If a source or destination grid is a single tile logically rectangular grid, then `ESMF_GridCreate()` 32.3.8 is used to create an ESMF_Grid object. The cell center coordinates of the input grid are put into the center stagger location (`ESMF_STAGGERLOC_CENTER`). In addition, the corner coordinates are also put into the corner stagger location (`ESMF_STAGGERLOC_CORNER`) for conservative regridding. If a grid contains multiple logically rectangular tiles connected with each other by edges, such as a Cubed Sphere grid, the grid can be represented as a multi-tile ESMF_Grid object created using `ESMF_GridCreateMosaic()` 32.3.12. Such a grid is stored in the GRIDSPEC Mosaic and tile file format. 12.8.5 The method `ESMF_MeshCreate()` 34.3.8 is used to create an ESMF_Mesh object, if the source or destination grid is an unstructured grid. When making this call, the flag `convert3D` is set to `TRUE` to convert the 2D coordinates into 3D Cartesian coordinates. Internally `ESMF_FieldRegridStore()` is used to generate the weight table and indices table representing the interpolation matrix.

12.2 Regridding Options

The offline regrid weight generation application supports most of the options available in the rest of the ESMF regrid system. The following is a description of these options as relevant to the application. For a more in-depth description see Section 25.2.

12.2.1 Poles

The regridding occurs in 3D to avoid problems with periodicity and with the pole singularity. This application supports four options for handling the pole region (i.e. the empty area above the top row of the source grid or below the bottom row of the source grid). Note that all of these pole options currently only work for logically rectangular grids (i.e. SCRIP format grids with grid_rank=2 or GRIDSPEC single-tile format grids). The first option is to leave the pole region empty ("-p none"), in this case if a destination point lies above or below the top row of the source grid, it will fail to map, yielding an error (unless "-i" is specified). With the next two options, the pole region is handled by constructing an artificial pole in the center of the top and bottom row of grid points and then filling in the region from this pole to the edges of the source grid with triangles. The pole is located at the average of the position of the points surrounding it, but moved outward to be at the same radius as the rest of the points in the grid. The difference between these two artificial pole options is what value is used at the pole. The default pole option ("-p all") sets the value at the pole to be the average of the values of all of the grid points surrounding the pole. For the other option ("-p N"), the user chooses a number N from 1 to the number of source grid points around the pole. For each destination point, the value at the pole is then the average of the N source points surrounding that destination point. For the last pole option ("-p teeth") no artificial pole is constructed, instead the pole region is covered by connecting points across the top and bottom row of the source Grid into triangles. As this makes the top and bottom of the source sphere flat, for

a big enough difference between the size of the source and destination pole regions, this can still result in unmapped destination points. Only pole option "none" is currently supported with the conservative interpolation methods (e.g. "-m conserve") and with the nearest neighbor interpolation methods ("-m nearestdtos" and "-m nearestdtos").

12.2.2 Masking

Masking is supported for both the logically rectangular grids and the unstructured grids. If the grid file is in the SCRIP format, the variable "grid_imask" is used as the mask. If the value is set to 0 for a grid point, then that point is considered masked out and won't be used in the weights generated by the application. If the grid file is in the ESMF format, the variable "element Mask" is used as the mask. For a grid defined in the GRIDSPEC single-tile or multi-tile grid or in the UGRID convention, there is no mask variable defined. However, a GRIDSPEC single-tile file or a UGRID file may contain both the grid definition and the data. The grid mask is usually constructed using the missing values defined in the data variable. The regridding application provides the argument "−−src_missingvalue" or "−−dst_missingvalue" for users to specify the variable name from where the mask can be constructed.

12.2.3 Extrapolation

The `ESMF_RegridWeightGen` application supports a number of kinds of extrapolation to fill in points not mapped by the regrid method. Please see the sections starting with section 25.2.11 for a description of these methods. When using the application an extrapolation method is specified by using the "−−extrap_method" flag. For the inverse distance weighted average method (nearestidavg), the number of source locations is specified using the "−−extrap_num_src_pnts" flag, and the distance exponent is specified using the "−−extrap_dist_exponent" flag. For the creep fill method (creep), the number of creep levels is specified using the "−−extrap_num_levels" flag.

12.2.4 Unmapped destination points

If a destination point can't be mapped, then the default behavior of the application is to stop with an error. By specifying "-i" or the equivalent "−−ignore_unmapped " the user can cause the application to ignore unmapped destination points. In this case, the output matrix won't contain entries for the unmapped destination points. Note that the unmapped point detection doesn't currently work for nearest destination to source method ("-m nearestdtos"), so when using that method it is as if "-i" is always on.

12.2.5 Line type

Another variation in the regridding supported with spherical grids is **line type**. This is controlled by the "−−line_type" or "-l" flag. This switch allows the user to select the path of the line which connects two points on a sphere surface. This in turn controls the path along which distances are calculated and the shape of the edges that make up a cell. Both of these quantities can influence how interpolation weights are calculated, for example in bilinear interpolation the distances are used to calculate the weights and the cell edges are used to determine to which source cell a destination point should be mapped.

ESMF currently supports two line types: "cartesian" and "greatcircle". The "cartesian" option specifies that the line between two points follows a straight path through the 3D Cartesian space in which the sphere is embedded. Distances are measured along this 3D Cartesian line. Under this option cells are approximated by planes in 3D space, and their boundaries are 3D Cartesian lines between their corner points. The "greatcircle" option specifies that the line between two points follows a great circle path along the sphere surface. (A great circle is the shortest path between two points on a sphere.) Distances are measured along the great circle path. Under this option cells are on the sphere surface, and their boundaries are great circle paths between their corner points.

12.3 Regridding Methods

This regridding application can be used to generate bilinear, patch, nearest neighbor, first-order conservative, or second-order conservative interpolation weights. The following is a description of these interpolation methods as relevant to the offline weight generation application. For a more in-depth description see Section 25.2.

12.3.1 Bilinear

The default interpolation method for the weight generation application is bilinear. The algorithm used by this application to generate the bilinear weights is the standard one found in many textbooks. Each destination point is mapped to a location in the source Mesh, the position of the destination point relative to the source points surrounding it is used to calculate the interpolation weights. A restriction on bilinear interpolation is that ESMF doesn't support self-intersecting cells (e.g. a cell twisted into a bow tie) in the source grid.

12.3.2 Patch

This application can also be used to generate patch interpolation weights. Patch interpolation is the ESMF version of a technique called "patch recovery" commonly used in finite element modeling [25] [22]. It typically results in better approximations to values and derivatives when compared to bilinear interpolation. Patch interpolation works by constructing multiple polynomial patches to represent the data in a source element. For 2D grids, these polynomials are currently 2nd degree 2D polynomials. The interpolated value at the destination point is the weighted average of the values of the patches at that point.

The patch interpolation process works as follows. For each source element containing a destination point we construct a patch for each corner node that makes up the element (e.g. 4 patches for quadrilateral elements, 3 for triangular elements). To construct a polynomial patch for a corner node we gather all the elements around that node. (Note that this means that the patch interpolation weights depends on the source element's nodes, and the nodes of all elements neighboring the source element.) We then use a least squares fitting algorithm to choose the set of coefficients for the polynomial that produces the best fit for the data in the elements. This polynomial will give a value at the destination point that fits the source data in the elements surrounding the corner node. We then repeat this process for each corner node of the source element generating a new polynomial for each set of elements. To calculate the value at the destination point we do a weighted average of the values of each of the corner polynomials evaluated at that point. The weight for a corner's polynomial is the bilinear weight of the destination point with regard to that corner.

The patch method has a larger stencil than the bilinear, for this reason the patch weight matrix can be correspondingly larger than the bilinear matrix (e.g. for a quadrilateral grid the patch matrix is around 4x the size of the bilinear matrix). This can be an issue when performing a regrid weight generation operation close to the memory limit on a machine.

The patch method does not guarantee that after regridding the range of values in the destination field is within the range of values in the source field. For example, if the mininum value in the source field is 0.0, then it's possible that after regridding with the patch method, the destination field will contain values less than 0.0.

This method currently doesn't support self-intersecting cells (e.g. a cell twisted into a bow tie) in the source grid.

12.3.3 Nearest neighbor

The nearest neighbor interpolation options work by associating a point in one set with the closest point in another set. If two points are equally close then the point with the smallest index is arbitrarily used (i.e. the point with that would have the smallest index in the weight matrix). There are two versions of this type of interpolation available in the regrid weight generation application. One of these is the nearest source to destination method ("-m nearestsstod"). In

this method each destination point is mapped to the closest source point. The other of these is the nearest destination to source method ("-m nearestdtos"). In this method each source point is mapped to the closest destination point. Note that with this method the unmapped destination point detection doesn't work, so no error will be returned even if there are destination points which don't map to any source point.

12.3.4 First-order conservative

The main purpose of this method is to preserve the integral of the field across the interpolation from source to destination. (For a more in-depth description of what this preservation of the integral (i.e. conservation) means please see section 12.4.) In this method the value across each source cell is treated as a constant, so it will typically have a larger interpolation error than the bilinear or patch methods. The first-order method used here is similar to that described in the following paper [28].

By default (or if "−−norm_type dstarea"), the weight w_{ij} for a particular source cell i and destination cell j are calculated as $w_{ij} = f_{ij} * A_{si}/A_{dj}$. In this equation f_{ij} is the fraction of the source cell i contributing to destination cell j, and A_{si} and A_{dj} are the areas of the source and destination cells. If "−−norm_type fracarea", then the weights are further divided by the destination fraction. In other words, in that case $w_{ij} = f_{ij} * A_{si}/(A_{dj} * D_j)$ where D_j is fraction of the destination cell that intersects the unmasked source grid.

To see a description of how the different normalization options affect the values and integrals produced by the conservative methods see section 12.5. For a grid on a sphere this method uses great circle cells, for a description of potential problems with these see 25.2.9.

12.3.5 Second-order conservative

Like the first-order conservative method, this method's main purpose is to preserve the integral of the field across the interpolation from source to destination. (For a more in-depth description of what this preservation of the integral (i.e. conservation) means please see section 12.4.) The difference between the first and second-order conservative methods is that the second-order takes the source gradient into account, so it yields a smoother destination field that typically better matches the source field. This difference between the first and second-order methods is particularly apparent when going from a coarse source grid to a finer destination grid. Another difference is that the second-order method does not guarantee that after regridding the range of values in the destination field is within the range of values in the source field. For example, if the mininum value in the source field is 0.0, then it's possible that after regridding with the second-order method, the destination field will contain values less than 0.0. The implementation of this method is based on the one described in this paper [19].

The weights for second-order are calculated in a similar manner to first-order 12.3.4 with additional weights that take into account the gradient across the source cell.

To see a description of how the different normalization options affect the values and integrals produced by the conservative methods see section 12.5. For a grid on a sphere this method uses great circle cells, for a description of potential problems with these see 25.2.9.

12.4 Conservation

Conservation means that the following equation will hold: $\sum^{all-source-cells}(V_{si} * A'_{si}) = \sum^{all-destination-cells}(V_{dj} * A'_{dj})$, where V is the variable being regridded and A is the area of a cell. The subscripts s and d refer to source and destination values, and the i and j are the source and destination grid cell indices (flattening the arrays to 1 dimension).

There are a couple of options for how the areas (A) in the proceding equation can be calculated. By default, ESMF calculates the areas. For a grid on a sphere, areas are calculated by connecting the corner coordinates of each grid cell (obtained from the grid file) with great circles. For a Cartesian grid, areas are calculated in the typcial manner for 2D polygons. If the user specifies the user area's option ("--user_areas"), then weights will be adjusted so that the equation above will hold for the areas provided in the grid files. In either case, the areas output to the weight file are the ones for which the weights have been adjusted to conserve.

12.5 The effect of normalization options on integrals and values produced by conservative methods

It is important to note that by default (i.e. using destination area normalization) conservative regridding doesn't normalize the interpolation weights by the destination fraction. This means that for a destination grid which only partially overlaps the source grid the destination field which is output from the regrid operation should be divided by the corresponding destination fraction to yield the true interpolated values for cells which are only partially covered by the source grid. The fraction also needs to be included when computing the total source and destination integrals. To include the fraction in the conservative weights, the user can specify the fraction area normalization type. This can be done by specifying "--norm_type fracarea" on the command line.

For weights generated using destination area normalization (either by not specifying any normalization type or by specifying "--norm_type dstarea"), the following pseudo-code shows how to adjust a destination field (`dst_field`) by the destination fraction (`dst_frac`) called `frac_b` in the weight file:

```
for each destination element i
   if (dst_frac(i) not equal to 0.0) then
      dst_field(i)=dst_field(i)/dst_frac(i)
   end if
end for
```

For weights generated using destination area normalization (either by not specifying any normalization type or by specifying "--norm_type dstarea"), the following pseudo-code shows how to compute the total destination integral (`dst_total`) given the destination field values (`dst_field`) resulting from the sparse matrix multiplication of the weights in the weight file by the source field, the destination area (`dst_area`) called `area_b` in the weight file, and the destination fraction (`dst_frac`) called `frac_b` in the weight file. As in the previous paragraph, it also shows how to adjust the destination field (`dst_field`) resulting from the sparse matrix multiplication by the fraction (`dst_frac`) called `frac_b` in the weight file:

```
dst_total=0.0
for each destination element i
   if (dst_frac(i) not equal to 0.0) then
      dst_total=dst_total+dst_field(i)*dst_area(i)
      dst_field(i)=dst_field(i)/dst_frac(i)
      ! If mass computed here after dst_field adjust, would need to be:
      ! dst_total=dst_total+dst_field(i)*dst_area(i)*dst_frac(i)
   end if
end for
```

For weights generated using fraction area normalization (set by specifying "--norm_type fracarea"), no adjustment of the destination field (`dst_field`) by the destination fraction is necessary. The following pseudo-code shows how to compute the total destination integral (`dst_total`) given the destination field values (`dst_field`) resulting from

the sparse matrix multiplication of the weights in the weight file by the source field, the destination area (dst_area) called area_b in the weight file, and the destination fraction (dst_frac) called frac_b in the weight file:

```
dst_total=0.0
for each destination element i
      dst_total=dst_total+dst_field(i)*dst_area(i)*dst_frac(i)
end for
```

For either normalization type, the following pseudo-code shows how to compute the total source integral (src_total) given the source field values (src_field), the source area (src_area) called area_a in the weight file, and the source fraction (src_frac) called frac_a in the weight file:

```
src_total=0.0
for each source element i
   src_total=src_total+src_field(i)*src_area(i)*src_frac(i)
end for
```

12.6 Usage

The command line arguments are all keyword based. Both the long keyword prefixed with '--' or the one character short keyword prefixed with '-' are supported. The format to run the application is as follows:

```
ESMF_RegridWeightGen
        --source|-s src_grid_filename
        --destination|-d dst_grid_filename
        --weight|-w out_weight_file
        [--method|-m bilinear|patch|nearestdtos|nearststod|conserve|conserve2nd]
        [--pole|-p none|all|teeth|1|2|..]
        [--line_type|-l cartesian|greatcircle]
        [--norm_type dstarea|fracarea]
        [--extrap_method none|nearststod|nearestidavg|nearestd|creep|creepnrstd]
        [--extrap_num_src_pnts <N>]
        [--extrap_dist_exponent <P>]
        [--extrap_num_levels <L>]
        [--ignore_unmapped|-i]
        [--ignore_degenerate]
        [--src_type SCRIP|ESMFMESH|UGRID|CFGRID|GRIDSPEC|MOSAIC|TILE]
        [--dst_type SCRIP|ESMFMESH|UGRID|CFGRID|GRIDSPEC|MOSAIC|TILE]
        [-t SCRIP|ESMFMESH|UGRID|CFGRID|GRIDSPEC|MOSAIC|TILE]
        [-r]
        [--src_regional]
        [--dst_regional]
        [--64bit_offset]
        [--netcdf4]
        [--src_missingvalue var_name]
        [--dst_missingvalue var_name]
        [--src_coordinates lon_name,lat_name]
        [--dst_coordinates lon_name,var_name]
        [--tilefile_path filepath]
```

```
        [--src_loc center|corner]
        [--dst_loc center|corner]
        [--user_areas]
        [--weight_only]
        [--check]
        [--checkFlag]
        [--no_log]
        [--help|-h]
        [--version]
        [-V]

where:
  --source or -s      - a required argument specifying the source grid
                        file name

  --destination or -d - a required argument specifying the destination
                        grid file name

  --weight or -w      - a required argument specifying the output regridding
                        weight file name

  --method or -m      - an optional argument specifying which interpolation
                        method is used. The value can be one of the following:

                        bilinear     - for bilinear interpolation, also the
                                       default method if not specified.
                        patch        - for patch recovery interpolation
                        nearestdtos  - for nearest destination to source interpolation
                        conserve     - for first-order conservative interpolation
                        conserve2nd  - for second-order conservative interpolation

  --pole or -p        - an optional argument indicating how to extrapolate
                        in the pole region.
                        The value can be one of the following:

                        none  - No pole, the source grid ends at the top
                                (and bottom) row of nodes specified in
                                <source grid>.
                        all   - Construct an artificial pole placed in the
                                center of the top (or bottom) row of nodes,
                                but projected onto the sphere formed by the
                                rest of the grid. The value at this pole is
                                the average of all the pole values. This
                                is the default option.

                        teeth - No new pole point is constructed, instead
                                the holes at the poles are filled by
                                constructing triangles across the top and
                                bottom row of the source Grid. This can be
                                useful because no averaging occurs, however,
```

```
                              because the top and bottom of the sphere are
                              now flat, for a big enough mismatch between
                               the size of the destination and source pole
                              regions, some destination points may still
                              not be able to be mapped to the source Grid.

                      <N>   - Construct an artificial pole placed in the
                              center of the top (or bottom) row of nodes,
                              but projected onto the sphere formed by the
                              rest of the grid. The value at this pole is
                              the average of the N source nodes next to
                              the pole and surrounding the destination
                              point (i.e.  the value may differ for each
                              destination point. Here N ranges from 1 to
                              the number of nodes around the pole.

--line_type
     or
     -l           - an optional argument indicating the type of path
                    lines (e.g. cell edges) follow on a spherical
                    surface. The default value depends on the regrid
                    method. For non-conservative methods the default is
                    cartesian. For conservative methods the default is
                    greatcircle.

--norm_type       - an optional argument indicating the type of normal-
                    ization to do when generating conservative weights.
                    The default value is dstarea.

--extrap_method   - an optional argument specifying which extrapolation
                    method is used to handle unmapped destination locations.
                    The value can be one of the following:

                    none         - no extrapolation method should be used.
                                   This is the default.

                    nearestsstod  - nearest source to destination. Each
                                   unmapped destination location is mapped
                                   to the closest source location. This
                                   extrapolation method is not supported with
                                   conservative regrid methods (e.g. conserve).

                    nearestidavg - inverse distance weighted average.
                                   The value of each unmapped destination location
                                   is the weighted average of the closest N
                                   source locations. The weight is the reciprocal
                                   of the distance of the source from the destination
                                   raised to a power P. All the weights contributing
                                   to one destination point are normalized so that
                                   they sum to 1.0. The user can choose N and P by
                                   using --extrap_num_src_pnts and
```

```
                                --extrap_dist_exponent, but defaults are
                                also provided. This extrapolation method is not
                                supported with conservative regrid methods
                                (e.g. conserve).

                    nearestd     - nearest mapped destination to
                                unmapped destination. Each
                                unmapped destination location is mapped
                                to the closest mapped destination location. This
                                extrapolation method is not supported with
                                conservative regrid methods (e.g. conserve).

                    creep        - creep fill.
                                Here unmapped destination points are filled by
                                moving values from mapped locations to neighboring
                                unmapped locations. The value filled into a
                                new location is the average of its already filled
                                neighbors' values. This process is repeated for
                                the number of levels indicated by the
                                --extrap_num_levels flag. This extrapolation
                                method is not supported with conservative
                                regrid methods (e.g. conserve).

                    creepnrstd   - creep fill with nearest destination.
                                Here unmapped destination points are filled by
                                first doing a creep fill, and then filling the
                                remaining unmapped points by using
                                the nearest destination method (both of these
                                methods are described in the entries above).
                                This extrapolation method is not supported
                                with conservative regrid methods (e.g. conserve).


--extrap_num_src_pnts - an optional argument specifying how many source points
                        should be used when the extrapolation method is
                        nearestidavg. If not specified, the default is 8.

--extrap_dist_exponent - an optional argument specifying the exponent that
                         the distance should be raised to when the
                         extrapolation method is nearestidavg. If not specified,
                         the default is 2.0.

--extrap_num_levels - an optional argument specifying how many levels should
                      be filled for level based extrapolation methods (e.g. creep).

--ignore_unmapped
       or
       -i         - ignore unmapped destination points. If not specified
                    the default is to stop with an error if an unmapped
                    point is found.
```

```
--ignore_degenerate - ignore degenerate cells in the input grids. If not specified
                      the default is to stop with an error if an degenerate
                      cell is found.

--src_type        - an optional argument specifying the source grid file type.
                      The value can be one of SCRIP, ESMFMESH, UGRID, CFGRID, GRIDSPEC, N
                      If neither --src_type nor -t is given, the source grid file type wi
                      determined automatically. (Usually it is unnecessary to provide --s
                      but it can be specified when the automatic file type determination

--dst_type        - an optional argument specifying the destination grid file type.
                      The value can be one of SCRIP, ESMFMESH, UGRID, CFGRID, GRIDSPEC, N
                      If neither --dst_type nor -t is given, the destination grid file ty
                      determined automatically. (Usually it is unnecessary to provide --d
                      but it can be specified when the automatic file type determination

-t                - an optional argument specifying the file types for both the source
                      and the destination grid files.
                      The value can be one of SCRIP, ESMFMESH, UGRID, CFGRID, GRIDSPEC, N
                      If -t is given, then neither --src_type nor --dst_type can be giver

-r                - an optional argument specifying that the source and
                      destination grids are regional grids.  If the argument
                      is not given, the grids are assumed to be global.

--src_regional    - an optional argument specifying that the source is
                      a regional grid and the destination is a global grid.

--dst_regional    - an optional argument specifying that the destination
                      is a regional grid and the source is a global grid.

--64bit_offset    - an optional argument specifying that the weight file
                      will be created in the NetCDF 64-bit offset format
                      to allow variables larger than 2GB.  Note the 64-bit
                      offset format is not supported in the NetCDF version
                      earlier than 3.6.0.  An error message will be generated
                      if this flag is specified while the application is
                      linked with a NetCDF library earlier than 3.6.0.

--netcdf4         - an optional argument specifying that the output weight
                      will be created in the NetCDF4 format.  This option
                      only works with NetCDF library version 4.1 and above
                      that was compiled with the NetCDF4 file format enabled
                      (with HDF5 compression). An error message will be
                      generated if these conditions are not met.

--src_missingvalue - an optional argument that defines the variable name
                       in the source grid file if the file type is either CF Convension
                       single-tile or UGRID.  The regridder will generate a mask using
                       the missing values of the data variable.  The missing
                       value is defined using an attribute called "_FillValue"
```

```
                      or "missing_value".
 --dst_missingvalue - an optional argument that defines the variable name
                      in the destination grid file if the file type is
                      CF Convension single-tile or UGRID.  The regridder will generate a
                      the missing values of the data variable.  The missing
                      value is defined using an attribute called "_FillValue"
                      or "missing_value"

--src_coordinates - an optional argument that defines the longitude and
                    latitude variable names in the source grid file if
                    the file type is CF Convension single-tile.  The variable names are
                    separated by comma.  This argument is required in case
                    there are multiple sets of coordinate variables defined
                    in the file.  Without this argument, the offline regrid
                    application will terminate with an error message when
                    multiple coordinate variables are found in the file.

--dst_coordinates - an optional argument that defines the longitude and
                    latitude variable names in the destination grid file
                    if the file type is CF Convension single-tile.  The variable names
                    separated by comma.  This argument is required in case
                    there are multiple sets of coordinate variables defined
                    in the file.  Without this argument, the offline regrid
                    application will terminate with an error message when
                    multiple coordinate variables are found in the file.

--tilefile_path   - the alternative file path for the tile files when either the source
                    or the destination grid is a GRIDSPEC Mosaic grid.  The path can
                    be either relative or absolute.  If it is relative, it is relative
                    to the working directory.  When specified, the gridlocation variabl
                    defined in the Mosaic file will be ignored.

--src_loc         - an optional argument indicating which part of a source
                    grid cell to use for regridding. Currently, this flag is
                    only required for non-conservative regridding when the
                    source grid is an unstructured grid in ESMF or UGRID format.
                    For all other cases, only the center location is supported.
                    The value can be one of the following:

                    center - Regrid using the center location of each grid cell.

                    corner - Regrid using the corner location of each grid cell.

--dst_loc         - an optional argument indicating which part of a destination
                    grid cell to use for regridding. Currently, this flag is
                    only required for non-conservative regridding when the
                    destination grid is an unstructured grid in ESMF or UGRID format.
                    For all other cases, only the center location is supported.
                    The value can be one of the following:

                    center - Regrid using the center location of each grid cell.
```

```
                    corner - Regrid using the corner location of each grid cell.


  --user_areas      - an optional argument specifying that the conservation
                      is adjusted to hold for the user areas provided in
                      the grid files. If not specified, then the
                      conservation will hold for the ESMF calculated
                      (great circle) areas.
                      Whichever areas the conservation holds for are output
                      to the weight file.

   --weight_only    - an optional argument specifying that the output weight file only
                      contains the weights and the source and destination grid's indices

   --check          - Check that the generated weights produce reasonable
                      regridded fields. This is done by calling ESMF_Regrid()
                      on an analytic source field using the weights generated
                      by this application.  The mean relative error between
                      the destination and analytic field is computed, as well
                      as the relative error between the mass of the source and
                      destination fields in the conservative case.

   --checkFlag      - Turn on more expensive extra error checking during
                      weight generation.

   --no_log         - Turn off the ESMF Log files.  By default, ESMF creates
                      multiple log files, one per PET.

   --help or -h     - Print the usage message and exit.

   --version        - Print ESMF version and license information and exit.

   -V               - Print ESMF version number and exit.
```

12.7 Examples

The example below shows the command to generate a set of conservative interpolation weights between a global SCRIP format source grid file (src.nc) and a global SCRIP format destination grid file (dst.nc). The weights are written into file w.nc. In this case the ESMF library and applications have been compiled using an MPI parallel communication library (e.g. setting ESMF_COMM to openmpi) to enable it to run in parallel. To demonstrate running in parallel the mpirun script is used to run the application in parallel on 4 processors.

```
mpirun -np 4 ./ESMF_RegridWeightGen -s src.nc -d dst.nc -m conserve -w w.nc
```

The next example below shows the command to do the same thing as the previous example except for three changes. The first change is this time the source grid is regional ("`--src_regional`"). The second change is that for this

example bilinear interpolation ("`-m bilinear`") is being used. Because bilinear is the default, we could also omit the "`-m bilinear`". The third change is that in this example some of the destination points are expected to not be found in the source grid, but the user is ok with that and just wants those points to not appear in the weight file instead of causing an error ("`-i`").

```
mpirun -np 4 ./ESMF_RegridWeightGen -i --src_regional -s src.nc -d dst.nc \
               -m bilinear -w w.nc
```

The last example shows how to use the missing values of a data variable to generate the grid mask for a CF Convension single-tile file, how to specify the coordinate variable names using "`--src_coordinates`" and use user defined area for the conservative regridding.

```
mpirun -np 4 ./ESMF_RegridWeightGen -s src.nc -d dst.nc -m conserve \
               -w w.nc --src_missingvalue datavar \
               --src_coordinates lon,lat --user_areas
```

In the above example, "datavar" is the variable name defined in the source grid that will be used to construct the mask using its missing values. In addition, "`lon`" and "`lat`" are the variable names for the longitude and latitude values, respectively.

12.8 Grid File Formats

This section describes the grid file formats supported by ESMF. These are typically used either to describe grids to ESMF_RegridWeightGen or to create grids within ESMF. The following table summarizes the features supported by each of the grid file formats.

Feature	SCRIP	ESMF Unstruct.	CF Grid	UGRID	GRIDSPEC Mosaic
Create an unstructured Mesh	YES	YES	NO	YES	NO
Create a logically-rectangular Grid	YES	NO	YES	NO	YES
Create a multi-tile Grid	NO	NO	NO	NO	YES
2D	YES	YES	YES	YES	YES
3D	NO	YES	NO	YES	NO
Spherical coordinates	YES	YES	YES	YES	YES
Cartesian coordinates	NO	YES	NO	NO	NO
Non-conserv regrid on corners	NO	YES	NO	YES	YES

The rest of this section contains a detailed descriptions of each grid file format along with a simple example of the format.

12.8.1 SCRIP Grid File Format

A SCRIP format grid file is a NetCDF file for describing grids. This format is the same as is used by the SCRIP [13] package, and so grid files which work with that package should also work here. When using the ESMF API, the file format flag `ESMF_FILEFORMAT_SCRIP` can be used to indicate a file in this format.

SCRIP format files are capable of storing either 2D logically rectangular grids or 2D unstructured grids. The basic format for both of these grids is the same and they are distinguished by the value of the `grid_rank` variable. Logically rectangular grids have `grid_rank` set to 2, whereas unstructured grids have this variable set to 1.

The following is a sample header of a logically rectangular grid file:

```
netcdf remap_grid_T42 {
dimensions:
      grid_size = 8192 ;
      grid_corners = 4 ;
      grid_rank = 2 ;

variables:
      int grid_dims(grid_rank) ;
      double grid_center_lat(grid_size) ;
         grid_center_lat:units = "radians";
      double grid_center_lon(grid_size) ;
         grid_center_lon:units = "radians" ;
      int grid_imask(grid_size) ;
         grid_imask:units = "unitless" ;
      double grid_corner_lat(grid_size, grid_corners) ;
         grid_corner_lat:units = "radians" ;
      double grid_corner_lon(grid_size, grid_corners) ;
         grid_corner_lon:units ="radians" ;

// global attributes:
         :title = "T42 Gaussian Grid" ;
}
```

The `grid_size` dimension is the total number of cells in the grid; `grid_rank` refers to the number of dimensions. In this case `grid_rank` is 2 for a 2D logically rectangular grid. The integer array `grid_dims` gives the number of grid cells along each dimension. The number of corners (vertices) in each grid cell is given by `grid_corners`. The grid corner coordinates need to be listed in an order such that the corners are in counterclockwise order. Also, note that if your grid has a variable number of corners on grid cells, then you should set `grid_corners` to be the highest value and use redundant points on cells with fewer corners.

The integer array `grid_imask` is used to mask out grid cells which should not participate in the regridding. The array values should be zero for any points that do not participate in the regridding and one for all other points. Coordinate arrays provide the latitudes and longitudes of cell centers and cell corners. The unit of the coordinates can be either "`radians`" or "`degrees`".

Here is a sample header from a SCRIP unstructured grid file:

```
netcdf ne4np4-pentagons {
dimensions:
      grid_size = 866 ;
      grid_corners = 5 ;
      grid_rank = 1 ;
variables:
      int grid_dims(grid_rank) ;
      double grid_center_lat(grid_size) ;
         grid_center_lat:units = "degrees" ;
```

```
      double grid_center_lon(grid_size) ;
         grid_center_lon:units = "degrees" ;
      double grid_corner_lon(grid_size, grid_corners) ;
         grid_corner_lon:units = "degrees";
         grid_corner_lon:_FillValue = -9999. ;
      double grid_corner_lat(grid_size, grid_corners) ;
         grid_corner_lat:units = "degrees" ;
         grid_corner_lat:_FillValue = -9999. ;
      int grid_imask(grid_size) ;
         grid_imask:_FillValue = -9999. ;
      double grid_area(grid_size) ;
         grid_area:units = "radians^2" ;
         grid_area:long_name = "area weights" ;
}
```

The variables are the same as described above, however, here `grid_rank = 1`. In this format there is no notion of which cells are next to which, so to construct the unstructured mesh the connection between cells is defined by searching for cells with the same corner coordinates. (e.g. the same `grid_corner_lat` and `grid_corner_lon` values).

Both the SCRIP grid file format and the SCRIP weight file format work with the SCRIP 1.4 tools.

12.8.2 ESMF Unstructured Grid File Format (ESMFMESH)

ESMF supports a custom unstructured grid file format for describing meshes. This format is more compatible than the SCRIP format with the methods used to create an ESMF Mesh object, so less conversion needs to be done to create a Mesh. The ESMF format is thus more efficient than SCRIP when used with ESMF codes (e.g. the ESMF_RegridWeightGen application). When using the ESMF API, the file format flag `ESMF_FILEFORMAT_ESMFMESH` can be used to indicate a file in this format.

The following is a sample header in the ESMF format followed by a description:

```
netcdf mesh-esmf {
dimensions:
     nodeCount = 9 ;
     elementCount = 5 ;
     maxNodePElement = 4 ;
     coordDim = 2 ;
variables:
     double nodeCoords(nodeCount, coordDim);
            nodeCoords:units = "degrees" ;
     int elementConn(elementCount, maxNodePElement) ;
            elementConn:long_name = "Node Indices that define the element /
                                     connectivity";
            elementConn:_FillValue = -1 ;
            elementConn:start_index = 1 ;
     byte numElementConn(elementCount) ;
            numElementConn:long_name = "Number of nodes per element" ;
     double centerCoords(elementCount, coordDim) ;
            centerCoords:units = "degrees" ;
     double elementArea(elementCount) ;
```

```
            elementArea:units = "radians^2" ;
            elementArea:long_name = "area weights" ;
     int elementMask(elementCount) ;
            elementMask:_FillValue = -9999. ;
// global attributes:
            :gridType="unstructured";
            :version = "0.9" ;
```

In the ESMF format the NetCDF dimensions have the following meanings. The `nodeCount` dimension is the number of nodes in the mesh. The `elementCount` dimension is the number of elements in the mesh. The `maxNodePElement` dimension is the maximum number of nodes in any element in the mesh. For example, in a mesh containing just triangles, then `maxNodePElement` would be 3. However, if the mesh contained one quadrilateral then `maxNodePElement` would need to be 4. The `coordDim` dimension is the number of dimensions of the points making up the mesh (i.e. the spatial dimension of the mesh). For example, a 2D planar mesh would have `coordDim` equal to 2.

In the ESMF format the NetCDF variables have the following meanings. The `nodeCoords` variable contains the coordinates for each node. `nodeCoords` is a two-dimensional array of dimension `(nodeCount,coordDim)`. For a 2D Grid, `coordDim` is 2 and the grid can be either spherical or Cartesian. If the `units` attribute is either `degrees` or `radians`, it is spherical. `nodeCoords(:,1)` contains the longitude coordinates and `nodeCoords(:,2)` contains the latitude coordinates. If the value of the `units` attribute is `km`, `kilometers` or `meters`, the grid is in 2D Cartesian coordinates. `nodeCoords(:,1)` contains the x coordinates and `nodeCoords(:,2)` contains the y coordinates. The same order applies to `centerCoords`. For a 3D Grid, `coordDim` is 3 and the grid is assumed to be Cartesian. `nodeCoords(:,1)` contains the x coordinates, `nodeCoords(:,2)` contains the y coordinates, and `nodeCoords(:,3)` contains the z coordinates. The same order applies to `centerCoords`. A 2D grid in the Cartesian coordinate can only be regridded into another 2D grid in the Cartesian coordinate.

The `elementConn` variable describes how the nodes are connected together to form each element. For each element, this variable contains a list of indices into the `nodeCoords` variable pointing to the nodes which make up that element. By default, the index is 1-based. It can be changed to 0-based by adding an attribute `start_index` of value 0 to the `elementConn` variable. The order of the indices describing the element is important. The proper order for elements available in an ESMF mesh can be found in Section 34.2.1. The file format does support 2D polygons with more corners than those in that section, but internally these are broken into triangles. For these polygons, the corners should be listed such that they are in counterclockwise order around the element. `elementConn` can be either a 2D array or a 1D array. If it is a 2D array, the second dimension of the `elementConn` variable has to be the size of the largest number of nodes in any element (i.e. `maxNodePElement`), the actual number of nodes in an element is given by the `numElementConn` variable. For a given dimension (i.e. `coordDim`) the number of nodes in the element indicates the element shape. For example in 2D, if `numElementConn` is 4 then the element is a quadrilateral. In 3D, if `numElementConn` is 8 then the element is a hexahedron.

If the grid contains some elements with large number of edges, using a 2D array for `elementConn` could take a lot of space. In that case, `elementConn` can be represented as a 1D array that stores the edges of all the elements continuously. When `elementConn` is a 1D array, the dimension `maxNodePElement` is no longer needed, instead, a new dimension variable `connectionCount` is required to define the size of `elementConn`. The value of `connectionCount` is the sum of all the values in `numElementConn`.

The following is an example grid file using 1D array for `elementConn`:

```
netcdf catchments_esmf1 {
dimensions:
        nodeCount = 1824345 ;
        elementCount = 68127 ;
```

```
        connectionCount = 18567179 ;
        coordDim = 2 ;
variables:
        double nodeCoords(nodeCount, coordDim) ;
                nodeCoords:units = ``degrees'' ;
        double centerCoords(elementCount, coordDim) ;
                centerCoords:units = ``degrees'' ;
        int elementConn(connectionCount) ;
                elementConn:polygon_break_value = -8 ;
                elementConn:start_index = 0. ;
        int numElementConn(elementCount) ;
}
```

In some cases, one mesh element may contain multiple polygons and these polygons are separated by a special value defined in the attribute `polygon_break_value`.

The rest of the variables in the format are optional. The `centerCoords` variable gives the coordinates of the center of the corresponding element. This variable is used by ESMF for non-conservative interpolation on the data field residing at the center of the elements. The `elementArea` variable gives the area (or volume in 3D) of the corresponding element. This area is used by ESMF during conservative interpolation. If not specified, ESMF calculates the area (or volume) based on the coordinates of the nodes making up the element. The final variable is the `elementMask` variable. This variable allows the user to specify a mask value for the corresponding element. If the value is 1, then the element is unmasked and if the value is 0 the element is masked. If not specified, ESMF assumes that no elements are masked.

The following is a picture of a small example mesh and a sample ESMF format header using non-optional variables describing that mesh:

```
  2.0   7 ------- 8 ------- 9
        |         |         |
        |    4    |    5    |
        |         |         |
  1.0   4 ------- 5 ------- 6
        |         |  \   3  |
        |    1    |    \    |
        |         |  2   \  |
  0.0   1 ------- 2 ------- 3

       0.0       1.0        2.0

        Node indices at corners
       Element indices in centers

netcdf mesh-esmf {
dimensions:
        nodeCount = 9 ;
        elementCount = 5 ;
        maxNodePElement = 4 ;
        coordDim = 2 ;
variables:
        double  nodeCoords(nodeCount, coordDim);
                nodeCoords:units = "degrees" ;
```

```
        int elementConn(elementCount, maxNodePElement) ;
                elementConn:long_name = "Node Indices that define the element /
                                         connectivity";
                elementConn:_FillValue = -1 ;
        byte numElementConn(elementCount) ;
                numElementConn:long_name = "Number of nodes per element" ;
// global attributes:
                :gridType="unstructured";
                :version = "0.9" ;
data:
    nodeCoords=
        0.0, 0.0,
        1.0, 0.0,
        2.0, 0.0,
        0.0, 1.0,
        1.0, 1.0,
        2.0, 1.0,
        0.0, 2.0,
        1.0, 2.0,
        2.0, 2.0 ;

    elementConn=
        1, 2, 5,  4,
        2, 3, 5, -1,
        3, 6, 5, -1,
        4, 5, 8,  7,
        5, 6, 9,  8 ;

    numElementConn= 4, 3, 3, 4, 4 ;
}
```

12.8.3 CF Convention Single Tile File Format (CFGRID/GRIDSPEC)

ESMF_RegridWeightGen supports single tile logically rectangular lat/lon grid files that follow the NETCDF CF convention based on CF Metadata Conventions V1.6. When using the ESMF API, the file format flag `ESMF_FILEFORMAT_CFGRID` (or its equivalent deprecated name, `ESMF_FILEFORMAT_GRIDSPEC`) can be used to indicate a file in this format.

An example grid file is shown below. The cell center coordinate variables are determined by the value of its attribute `units`. The longitude variable has the attribute value set to either `degrees_east`, `degree_east`, `degrees_E`, `degree_E`, `degreesE` or `degreeE`. The latitude variable has the attribute value set to `degrees_north`, `degree_north`, `degrees_N`, `degree_N`, `degreesN` or `degreeN`. The latitude and the longitude variables are one-dimensional arrays if the grid is a regular lat/lon grid, two-dimensional arrays if the grid is curvilinear. The bound coordinate variables define the bound or the corner coordinates of a cell. The bound variable name is specified in the `bounds` attribute of the latitude and longitude variables. In the following example, the latitude bound variable is `lat_bnds` and the longitude bound variable is `lon_bnds`. The bound variables are 2D arrays for a regular lat/lon grid and a 3D array for a curvilinear grid. The first dimension of the bound array is 2 for a regular lat/lon grid and 4 for a curvilinear grid. The bound coordinates for a curvilinear grid are defined in counterclockwise order. Since the grid is a regular lat/lon grid, the coordinate variables are 1D and the bound variables are 2D with the first dimension equal

to 2. The bound coordinates will be read in and stored in a ESMF Grid object as the corner stagger coordinates when doing a conservative regrid. In case there are multiple sets of coordinate variables defined in a grid file, the offline regrid application will return an error for duplicate latitude or longitude variables unless "`--src_coordinates`" or "`--src_coordinates`" options are used to specify the coordinate variable names to be used in the regrid.

```
netcdf single_tile_grid {
dimensions:
time = 1 ;
bound = 2 ;
lat = 181 ;
lon = 360 ;
variables:
double lat(lat) ;
lat:bounds = "lat_bnds" ;
lat:units = "degrees_north" ;
lat:long_name = "latitude" ;
lat:standard_name = "latitude" ;
double lat_bnds(lat, bound) ;
double lon(lon) ;
lon:bounds = "lon_bnds" ;
lon:long_name = "longitude" ;
lon:standard_name = "longitude" ;
lon:units = "degrees_east" ;
double lon_bnds(lon, bound) ;
float so(time, lat, lon) ;
so:standard_name = "sea_water_salinity" ;
so:units = "psu" ;
so:missing_value = 1.e+20f ;
}
```

2D Cartesian coordinates can be supplied in additional to the required longitude/latitude coordinates. They can be used in ESMF to create a grid and used in ESMF_RegridWeightGen. The Cartesian coordinate variables have to include an "`axis`" attribute with value "X" or "Y". The "`units`" attribute can be either "m" or "meters" for meters or "km" or "kilometers" for kilometers. When a grid with 2D Cartesian coordinates are used in ESMF_RegridWeightGen, the optional arguments "`--src_coordinates`" or "`--src_coordinates`" have to be used to specify the coordinate variable names. A grid with 2D Cartesian coordinates can only be regridded with another grid in 2D Cartesian coordinates. Internally in ESMF, the Cartesian coordinates are all converted into kilometers. Here is an example of the 2D Cartesian coordinates:

```
double xc(xc) ;
        xc:long_name = "x-coordinate in Cartesian system" ;
        xc:standard_name = "projection_x_coordinate" ;
        xc:axis = "X" ;
        xc:units = "m" ;
double yc(yc) ;
        yc:long_name = "y-coordinate in Cartesian system" ;
        yc:standard_name = "projection_y_coordinate" ;
        yc:axis = "Y" ;
        yc:units = "m" ;
```

Since a CF convension tile file does not have a way to specify the grid mask, the mask is usually derived by the missing

values stored in a data variable. ESMF_RegridWeightGen provides an option for users to derive the grid mask from a data variable's missing values. The value of the missing value is defined by the variable attribute `missing_value` or `_FillValue`. If the value of the data point is equal to the missing value, the grid mask for that grid point is set to 0, otherwise, it is set to 1. In the following grid, the variable `so` can be used to derive the grid mask. A data variable could be a 2D, 3D or 4D. For example, it may have additional depth and time dimensions. It is assumed that the first and the second dimensions of the data variable should be the longitude and the latitude dimension. ESMF_RegridWeightGen will use the first 2D data values to derive the grid mask.

12.8.4 CF Convention UGRID File Format

ESMF_RegridWeightGen supports NetCDF files that follow the UGRID conventions for unstructured grids.

The UGRID file format is a proposed extension to the CF metadata conventions for the unstructured grid data model. The latest proposal can be found at https://github.com/ugrid-conventions/ugrid-conventions. The proposal is still evolving, the Mesh creation API and ESMF_RegridWeightGen in the current ESMF release is based on UGRID Version 0.9.0 published on October 29, 2013. When using the ESMF API, the file format flag `ESMF_FILEFORMAT_UGRID` can be used to indicate a file in this format.

In the UGRID proposal, a 1D, 2D, or 3D mesh topology can be defined for an unstructured grid. Currently, ESMF supports two types of meshes: (1) the 2D flexible mesh topology where each cell (a.k.a. "face" as defined in the UGRID document) in the mesh is either a triangle or a quadrilateral, and (2) the fully 3D unstructured mesh topology where each cell (a.k.a. "volume" as defined in the UGRID document) in the mesh is either a tetrahedron or a hexahedron. Pyramids and wedges are not currently supported in ESMF, but they can be defined as degenerate hexahedrons. ESMF_RegridWeightGen also supports UGRID 1D network mesh topology in a limited way: A 1D mesh in UGRID can be used as the source grid for nearest neighbor regridding, and as the destination grid for non-conservative regridding.

The main addition of the UGRID extension is a dummy variable that defines the mesh topology. This additional variable has a required attribute `cf_role` with value `"mesh_topology"`. In addition, it has two more required attributes: `topology_dimension` and `node_coordinates`. If it is a 1D mesh, `topology_dimension` is set to 1. If it is a 2D mesh (i.e., `topology_dimension` equals to 2), an additional attribute `face_node_connectivity` is required. If it is a 3D mesh (i.e., `topology_dimension` equals to 3), two additional attributes `volume_node_connectivity` and `volume_shape_type` are required. The value of attribute `node_coordinates` is a list of the names of the node longitude and latitude variables, plus the elevation variable if it is a 3D mesh. The value of attribute `face_node_connectivity` or `volume_node_connectivity` is the variable name that defines the corner node indices for each mesh cell. The additional attribute `volume_shape_type` for the 3D mesh points to a flag variable that specifies the shape type of each cell in the mesh.

Below is a sample 2D mesh called `FVCOM_grid2d`. The dummy mesh topology variable is `fvcom_mesh`. As described above, its `cf_role` attribute has to be `mesh_topology` and the `topology_dimension` attribute has to be 2 for a 2D mesh. It defines the node coordinate variable names to be `lon` and `lat`. It also specifies the face/node connectivity variable name as `nv`.

The variable `nv` is a two-dimensional array that defines the node indices of each face. The first dimension defines the maximal number of nodes for each face. In this example, it is a triangle mesh so the number of nodes per face is 3. Since each face may have a different number of corner nodes, some of the cells may have fewer nodes than the specified dimension. In that case, it is filled with the missing values defined by the attribute `_FillValue`. If `_FillValue` is not defined, the default value is -1. The nodes are in counterclockwise order. An optional attribute `start_index` defines whether the node index is 1-based or 0-based. If `start_index` is not defined, the default node index is 0-based.

The coordinate variables follows the CF metadata convention for coordinates. They are 1D array with attribute

standard_name being either latitude or longitude. The units of the coordinates can be either degrees or radians.

The UGRID files may also contain data variables. The data may be located at the nodes or at the faces. Two additional attributes are introduced in the UGRID extension for the data variables: location and mesh. The location attribute defines where the data is located, it can be either face or node. The mesh attribute defines which mesh topology this variable belongs to since multiple mesh topologies may be defined in one file. The coordinates attribute defined in the CF conventions can also be used to associate the variables to their locations. ESMF checks both location and coordinates attributes to determine where the data variable is defined upon. If both attributes are present, the location attribute takes the precedence. ESMF_RegridWeightGen uses the data variable on the face to derive the element masks for the mesh cell and variable on the node to derive the node masks for the mesh.

When creating a ESMF Mesh from a UGRID file, the user has to provide the mesh topology variable name to ESMF_MeshCreate().

```
netcdf FVCOM_grid2d {
dimensions:
node = 417642 ;
nele = 826866 ;
three = 3 ;
        time  = 1 ;

variables:
// Mesh topology
int fvcom_mesh;
fvcom_mesh:cf_role = "mesh_topology" ;
fvcom_mesh:topology_dimension = 2. ;
fvcom_mesh:node_coordinates = "lon lat" ;
fvcom_mesh:face_node_connectivity = "nv" ;
int nv(nele, three) ;
nv:standard_name = "face_node_connectivity" ;
nv:start_index = 1. ;

// Mesh node coordinates
float lon(node) ;
                lon:standard_name = "longitude" ;
        lon:units = "degrees_east" ;
float lat(node) ;
                lat:standard_name = "latitude" ;
lat:units = "degrees_north" ;

// Data variable
float ua(time, nele) ;
ua:standard_name = "barotropic_eastward_sea_water_velocity" ;
ua:missing_value = -999. ;
ua:location = "face" ;
ua:mesh = "fvcom_mesh" ;
float va(time, nele) ;
va:standard_name = "barotropic_northward_sea_water_velocity" ;
va:missing_value = -999. ;
va:location = "face" ;
va:mesh = "fvcom_mesh" ;
```

```
}
```

Following is a sample 3D UGRID file containing hexahedron cells. The dummy mesh topology variable is `fvcom_mesh`. Its `cf_role` attribute has to be `mesh_topology` and `topology_dimension` attribute has to be 3 for a 3D mesh. There are two additional required attributes: `volume_node_connectivity` specifies a variable name that defines the corner indices of the mesh cells and `volume_shape_type` specifies a variable name that defines the type of the mesh cells.

The node coordinates are defined by variables `nodelon`, `nodelat` and `height`. Currently, the units attribute for the height variable is either `kilometers`, `km` or `meters`. The variable `vertids` is a two-dimensional array that defines the corner node indices of each mesh cell. The first dimension defines the maximal number of nodes for each cell. There is only one type of cells in the sample grid, i.e. hexahedrons, so the maximal number of nodes is 8. The node order is defined in 34.2.1. The index can be either 1-based or 0-based and the default is 0-based. Setting an optional attribute `start_index` to 1 changed it to 1-based index scheme. The variable `meshtype` is a one-dimensional integer array that defines the shape type of each cell. Currently, ESMF only supports tetrahedron and hexahedron shapes. There are three attributes in `meshtype`: `flag_range`, `flag_values`, and `flag_meanings` representing the range of the flag values, all the possible flag values, and the meaning of each flag value, respectively. `flag_range` and `flag_values` are either a scalar or an array of integers. `flag_meanings` is a text string containing a list of shape types separated by space. In this example, there is only one shape type, thus, the values of `meshtype` are all 1.

```
netcdf wam_ugrid100_110 {
dimensions:
nnodes = 78432 ;
ncells = 66030 ;
eight = 8 ;
variables:
int mesh ;
mesh:cf_role = "mesh_topology" ;
mesh:topology_dimension = 3. ;
mesh:node_coordinates = "nodelon nodelat height" ;
mesh:volume_node_connectivity = "vertids" ;
mesh:volume_shape_type = "meshtype" ;
double nodelon(nnodes) ;
nodelon:standard_name = "longitude" ;
nodelon:units = "degrees_east" ;
double nodelat(nnodes) ;
nodelat:standard_name = "latitude" ;
nodelat:units = "degrees_north" ;
double height(nnodes) ;
height:standard_name = "elevation" ;
height:units = "kilometers" ;
int vertids(ncells, eight) ;
vertids:cf_role = "volume_node_connectivity" ;
vertids:start_index = 1. ;
int meshtype(ncells) ;
meshtype:cf_role = "volume_shape_type" ;
meshtype:flag_range = 1. ;
meshtype:flag_values = 1. ;
meshtype:flag_meanings = "hexahedron" ;
}
```

12.8.5 GRIDSPEC Mosaic File Format

GRIDSPEC is a draft proposal to extend the Climate and Forecast (CF) metadata conventions for the representation of gridded data for Earth System Models. The original GRIDSPEC standard was proposed by V. Balaji and Z. Liang of GFDL (see ref). GRIDSPEC extends the current CF convention to support grid mosaics, i.e., a grid consisting of multiple logically rectangular grid tiles. It also provides a mechanism for storing a grid dataset in multiple files. Therefore, it introduces different types of files, such as a mosaic file that defines the multiple tiles and their connectivity, and a tile file for a single tile grid definition on a so-called "Supergrid" format. When using the ESMF API, the file format flag `ESMF_FILEFORMAT_MOSAIC` can be used to indicate a file in this format.

Following is an example of a mosaic file that defines a 6 tile Cubed Sphere grid:

```
netcdf C48_mosaic {
dimensions:
ntiles = 6 ;
ncontact = 12 ;
string = 255 ;
variables:
char mosaic(string) ;
mosaic:standard_name = "grid_mosaic_spec" ;
mosaic:children = "gridtiles" ;
mosaic:contact_regions = "contacts" ;
mosaic:grid_descriptor = "" ;
char gridlocation(string) ;
char gridfiles(ntiles, string) ;
char gridtiles(ntiles, string) ;
char contacts(ncontact, string) ;
contacts:standard_name = "grid_contact_spec" ;
contacts:contact_type = "boundary" ;
contacts:alignment = "true" ;
contacts:contact_index = "contact_index" ;
contacts:orientation = "orient" ;
char contact_index(ncontact, string) ;
contact_index:standard_name = "starting_ending_point_index_of_contact" ;

data:

mosaic = "C48_mosaic" ;

gridlocation = "./data/" ;

gridfiles =
  "horizontal_grid.tile1.nc",
  "horizontal_grid.tile2.nc",
  "horizontal_grid.tile3.nc",
  "horizontal_grid.tile4.nc",
  "horizontal_grid.tile5.nc",
  "horizontal_grid.tile6.nc" ;

gridtiles =
  "tile1",
```

```
  "tile2",
  "tile3",
  "tile4",
  "tile5",
  "tile6" ;

contacts =
  "C48_mosaic:tile1::C48_mosaic:tile2",
  "C48_mosaic:tile1::C48_mosaic:tile3",
  "C48_mosaic:tile1::C48_mosaic:tile5",
  "C48_mosaic:tile1::C48_mosaic:tile6",
  "C48_mosaic:tile2::C48_mosaic:tile3",
  "C48_mosaic:tile2::C48_mosaic:tile4",
  "C48_mosaic:tile2::C48_mosaic:tile6",
  "C48_mosaic:tile3::C48_mosaic:tile4",
  "C48_mosaic:tile3::C48_mosaic:tile5",
  "C48_mosaic:tile4::C48_mosaic:tile5",
  "C48_mosaic:tile4::C48_mosaic:tile6",
  "C48_mosaic:tile5::C48_mosaic:tile6" ;

 contact_index =
  "96:96,1:96::1:1,1:96",
  "1:96,96:96::1:1,96:1",
  "1:1,1:96::96:1,96:96",
  "1:96,1:1::1:96,96:96",
  "1:96,96:96::1:96,1:1",
  "96:96,1:96::96:1,1:1",
  "1:96,1:1::96:96,96:1",
  "96:96,1:96::1:1,1:96",
  "1:96,96:96::1:1,96:1",
  "1:96,96:96::1:96,1:1",
  "96:96,1:96::96:1,1:1",
  "96:96,1:96::1:1,1:96" ;
}
```

A GRIDSPEC Mosaic file is identified by a dummy variable with its `standard_name` attribute set to `grid_mosaic_spec`. The `children` attribute of this dummy variable provides the variable name that contains the tile names and the `contact_region` attribute points to the variable name that defines a list of tile pairs that are connected to each other. For a Cubed Sphere grid, there are six tiles and 12 connections. The `contacts` variable, the variable that defines the contact_region has three required attributes: `standard_name`, `contact_type`, and `contact_index`. `startand_name` has to be set to `grid_contact_spec`. `contact_type` can be either `boundary` or `overlap`. Currently, ESMF only supports non-overlapping tiles connected by `boundary`. `contact_index` defines the variable name that contains the information defining how the two adjacent tiles are connected to each other. In the above example, the `contact_index` variable contains 12 entries. Each entry contains the index of four points that defines the two edges that contact to each other from the two neighboring tiles. Assuming the four points are A, B, C, and D. A and B defines the edge of tile 1 and C and D defines the edge of tile 2. A is the same point as C and B is the same as D. (Ai, Aj) is the index for point A. The entry looks like this:

```
  Ai:Bi,Aj:Bj::Ci:Di,Cj:Dj
```

There are two fixed-name variables required in the mosaic file: variable `gridfiles` defines the associated tile

file names and variable `gridlocation` defines the directory path of the tile files. The `gridlocation` can be overwritten with an command line argument `-tilefile_path` in ESMF_RegridWeightGen application.

It is possible to define a single-tile Mosaic file. If there is only one tile in the Mosaic, the `contact_region` attribute in the `grid_mosaic_spec` varilable will be ignored.

Each tile in the Mosaic is a logically rectangular lat/lon grid and is defined in a separate file. The tile file used in the GRIDSPEC Mosaic file defines the coordinates of a so-called `supergrid`. A supergrid contains all the stagger locations in one grid. It contains the corner, edge and center coordinates all in one 2D array. In this example, there are 48 elements in each side of a tile, therefore, the size of the supergrid is 48*2+1=97, i.e. 97x97.

Here is the header of one of the tile files:

```
netcdf horizontal_grid.tile1 {
dimensions:
string = 255 ;
nx = 96 ;
ny = 96 ;
nxp = 97 ;
nyp = 97 ;
variables:
char tile(string) ;
tile:standard_name = "grid_tile_spec" ;
tile:geometry = "spherical" ;
tile:north_pole = "0.0 90.0" ;
tile:projection = "cube_gnomonic" ;
tile:discretization = "logically_rectangular" ;
tile:conformal = "FALSE" ;
double x(nyp, nxp) ;
x:standard_name = "geographic_longitude" ;
x:units = "degree_east" ;
double y(nyp, nxp) ;
y:standard_name = "geographic_latitude" ;
y:units = "degree_north" ;
double dx(nyp, nx) ;
dx:standard_name = "grid_edge_x_distance" ;
dx:units = "meters" ;
double dy(ny, nxp) ;
dy:standard_name = "grid_edge_y_distance" ;
dy:units = "meters" ;
double area(ny, nx) ;
area:standard_name = "grid_cell_area" ;
area:units = "m2" ;
double angle_dx(nyp, nxp) ;
angle_dx:standard_name = "grid_vertex_x_angle_WRT_geographic_east" ;
angle_dx:units = "degrees_east" ;
double angle_dy(nyp, nxp) ;
angle_dy:standard_name = "grid_vertex_y_angle_WRT_geographic_north" ;
angle_dy:units = "degrees_north" ;
char arcx(string) ;
arcx:standard_name = "grid_edge_x_arc_type" ;
arcx:north_pole = "0.0 90.0" ;
```

```
// global attributes:
:grid_version = "0.2" ;
:history = "/home/z1l/bin/tools_20091028/make_hgrid --grid_type gnomonic_ed --nlon 96" ;
}
```

The tile file not only defines the coordinates at all staggers, it also has a complete specification of distances, angles, and areas. In ESMF, we only use the `geographic_longitude` and `geographic_latitude` variables and its subsets on the center and corner staggers. ESMF currently supports the Mosaic containing tiles of the same size. A tile can be square or rectangular. For a cubed sphere grid, each tile is a square, i.e. the x and y dimensions are the same.

12.9 Regrid Weight File Format

A regrid weight file is a NetCDF format file containing the information necessary to perform a regridding between two grids. It also optionally contains information about the grids used to compute the regridding. This information is provided to allow applications (e.g. `ESMF_RegridWeightGenCheck`) to independently compute the accuracy of the regridding weights. In some cases, `ESMF_RegridWeightGen` doesn't output the full grid information (e.g. when it's costly to compute, or when the current grid format doesn't support the type of grids used to generate the weights). In that case, the weight file can still be used for regridding, but applications which depend on the grid information may not work.

The following is the header of a sample regridding weight file that describes a bilinear regridding from a logically rectangular 2D grid to a triangular unstructured grid:

```
netcdf t42mpas-bilinear {
dimensions:
        n_a = 8192 ;
        n_b = 20480 ;
        n_s = 42456 ;
        nv_a = 4 ;
        nv_b = 3 ;
        num_wgts = 1 ;
        src_grid_rank = 2 ;
        dst_grid_rank = 1 ;
variables:
        int src_grid_dims(src_grid_rank) ;
        int dst_grid_dims(dst_grid_rank) ;
        double yc_a(n_a) ;
               yc_a:units = "degrees" ;
        double yc_b(n_b) ;
               yc_b:units = "radians" ;
        double xc_a(n_a) ;
               xc_a:units = "degrees" ;
        double xc_b(n_b) ;
               xc_b:units = "radians" ;
        double yv_a(n_a, nv_a) ;
               yv_a:units = "degrees" ;
        double xv_a(n_a, nv_a) ;
               xv_a:units = "degrees" ;
```

```
        double yv_b(n_b, nv_b) ;
               yv_b:units = "radians" ;
        double xv_b(n_b, nv_b) ;
               xv_b:units = "radians" ;
        int mask_a(n_a) ;
               mask_a:units = "unitless" ;
        int mask_b(n_b) ;
               mask_b:units = "unitless" ;
        double area_a(n_a) ;
               area_a:units = "square radians" ;
        double area_b(n_b) ;
               area_b:units = "square radians" ;
        double frac_a(n_a) ;
               frac_a:units = "unitless" ;
        double frac_b(n_b) ;
               frac_b:units = "unitless" ;
        int col(n_s) ;
        int row(n_s) ;
        double S(n_s) ;

// global attributes:
        :title = "ESMF Offline Regridding Weight Generator" ;
        :normalization = "destarea" ;
        :map_method = "Bilinear remapping" ;
        :ESMF_regrid_method = "Bilinear" ;
        :conventions = "NCAR-CSM" ;
        :domain_a = "T42_grid.nc" ;
        :domain_b = "grid-dual.nc" ;
        :grid_file_src = "T42_grid.nc" ;
        :grid_file_dst = "grid-dual.nc" ;
        :ESMF_version = "ESMF_8_2_0_beta_snapshot_05-3-g2193fa3f8a" ;
}
```

The weight file contains four types of information: a description of the source grid, a description of the destination grid, the output of the regrid weight calculation, and global attributes describing the weight file.

12.9.1 Source Grid Description

The variables describing the source grid in the weight file end with the suffix "_a". To be consistent with the original use of this weight file format the grid information is written to the file such that the location being regridded is always the cell center. This means that the grid structure described here may not be identical to that in the source grid file. The full set of these variables may not always be present in the weight file. The following is an explanation of each variable:

n_a The number of source cells.

nv_a The maximum number of corners (i.e. vertices) around a source cell. If a cell has less than the maximum number of corners, then the remaining corner coordinates are repeats of the last valid corner's coordinates.

xc_a The longitude coordinates of the centers of each source cell.

yc_a The latitude coordinates of the centers of each source cell.

xv_a The longitude coordinates of the corners of each source cell.

yv_a The latitude coordinates of the corners of each source cell.

mask_a The mask for each source cell. A value of 0, indicates that the cell is masked.

area_a The area of each source cell. This quantity is either from the source grid file or calculated by `ESMF_RegridWeightGen`. When a non-conservative regridding method (e.g. bilinear) is used, the area is set to 0.0.

src_grid_rank The number of dimensions of the source grid. Currently this can only be 1 or 2. Where 1 indicates an unstructured grid and 2 indicates a 2D logically rectangular grid.

src_grid_dims The number of cells along each dimension of the source grid. For unstructured grids this is equal to the number of cells in the grid.

12.9.2 Destination Grid Description

The variables describing the destination grid in the weight file end with the suffix "_b". To be consistent with the original use of this weight file format the grid information is written to the file such that the location being regridded is always the cell center. This means that the grid structure described here may not be identical to that in the destination grid file. The full set of these variables may not always be present in the weight file. The following is an explanation of each variable:

n_b The number of destination cells.

nv_b The maximum number of corners (i.e. vertices) around a destination cell. If a cell has less than the maximum number of corners, then the remaining corner coordinates are repeats of the last valid corner's coordinates.

xc_b The longitude coordinates of the centers of each destination cell.

yc_b The latitude coordinates of the centers of each destination cell.

xv_b The longitude coordinates of the corners of each destination cell.

yv_b The latitude coordinates of the corners of each destination cell.

mask_b The mask for each destination cell. A value of 0, indicates that the cell is masked.

area_b The area of each destination cell. This quantity is either from the destination grid file or calculated by `ESMF_RegridWeightGen`. When a non-conservative regridding method (e.g. bilinear) is used, the area is set to 0.0.

dst_grid_rank The number of dimensions of the destination grid. Currently this can only be 1 or 2. Where 1 indicates an unstructured grid and 2 indicates a 2D logically rectangular grid.

dst_grid_dims The number of cells along each dimension of the destination grid. For unstructured grids this is equal to the number of cells in the grid.

12.9.3 Regrid Calculation Output

The following is an explanation of the variables containing the output of the regridding calculation:

n_s The number of entries in the regridding matrix.

col The position in the source grid for each entry in the regridding matrix.

row The position in the destination grid for each entry in the weight matrix.

S The weight for each entry in the regridding matrix.

frac_a When a conservative regridding method is used, this contains the fraction of each source cell that participated in the regridding. When a non-conservative regridding method is used, this array is set to 0.0.

frac_b When a conservative regridding method is used, this contains the fraction of each destination cell that participated in the regridding. When a non-conservative regridding method is used, this array is set to 1.0 where the point participated in the regridding (i.e. was within the unmasked source grid), and 0.0 otherwise.

The following code shows how to apply the weights in the weight file to interpolate a source field (`src_field`) defined over the source grid to a destination field (`dst_field`) defined over the destination grid. The variables `n_s`, `n_b`, `row`, `col`, and `S` are from the weight file.

```
! Initialize destination field to 0.0
do i=1, n_b
  dst_field(i)=0.0
enddo

! Apply weights
do i=1, n_s
  dst_field(row(i))=dst_field(row(i))+S(i)*src_field(col(i))
enddo
```

If the first-order conservative interpolation method is specified ("-m conserve") then the destination field may need to be adjusted by the destination fraction (`frac_b`). This should be done if the normalization type is "dstarea" and if the destination grid extends outside the unmasked source grid. If it isn't known if the destination extends outside the source, then it doesn't hurt to apply the destination fraction. (If it doesn't extend outside, then the fraction will be 1.0 everywhere anyway.) The following code shows how to adjust an already interpolated destination field (`dst_field`) by the destination fraction. The variables `n_b`, and `frac_b` are from the weight file:

```
! Adjust destination field by fraction
do i=1, n_b
  if (frac_b(i) .ne. 0.0) then
     dst_field(i)=dst_field(i)/frac_b(i)
  endif
enddo
```

12.9.4 Weight File Description Attributes

The following is an explanation of the global attributes describing the weight file:

title Always set to "ESMF Offline Regridding Weight Generator" when generated by `ESMF_RegridWeightGen`.

normalization The normalization type used to compute conservative regridding weights. The options for this are described in section 12.3.4 which contains a description of the conservative regridding method.

map_method An indication of the mapping method which is constrained by the original use of this format. In some cases the method specified here will differ from the actual regridding method used, for example weights generated with the "patch" method will have this attribute set to "Bilinear remapping".

ESMF_regrid_method The ESMF regridding method used to generate the weight file.

conventions The set of conventions that the weight file follows. Currently only "NCAR-CSM" is supported.

domain_a The source grid file name.

domain_b The destination grid file name.

grid_file_src The source grid file name.

grid_file_dst The destination grid file name.

ESMF_version The version of ESMF used to generate the weight file.

12.9.5 Weight Only Weight File

In the current ESMF distribution, a new simplified weight file option `-weight_only` is added to `ESMF_RegridWeightGen`. The simple weight file contains only a subset of the Regrid Calculation Output defined in 12.9.3, i.e. the weights `S`, the source grid indices `col` and destination grid indices `row`. The dimension of these three variables is `n_s`.

12.10 ESMF_RegridWeightGenCheck

The ESMF_RegridWeightGen application is used in the ESMF_RegridWeightGenCheck external demo to generate interpolation weights. These weights are then tested by using them for a regridding operation and then comparing them against an analytic function on the destination grid. This external demo is also used to regression test ESMF regridding, and it is run nightly on over 150 combinations of structured and unstructured, regional and global grids, and regridding methods.

13 ESMF_Regrid

13.1 Description

This section describes the file-based regridding command line tool provided by ESMF (for a description of ESMF regridding in general see Section 25.2). Regridding, also called remapping or interpolation, is the process of changing the grid that underlies data values while preserving qualities of the original data. Different kinds of transformations are appropriate for different problems. Regridding may be needed when communicating data between Earth system model components such as land and atmosphere, or between different data sets to support operations such as visualization.

Regridding can be broken into two stages. The first stage is generation of an interpolation weight matrix that describes how points in the source grid contribute to points in the destination grid. The second stage is the multiplication of values on the source grid by the interpolation weight matrix to produce values on the destination grid. This is implemented as a parallel sparse matrix multiplication.

The `ESMF_RegridWeightGen` command line tool described in Section 12 performs the first stage of the regridding process - generate the interpolation weight matrix. This tool not only calculates the interpolation weights, it also applies the weights to a list of variables stored in the source grid file and produces the interpolated values on the destination grid. The interpolated output variable is written out to the destination grid file. This tool supports three CF compliant file formats: the CF Single Tile grid file format(12.8.3) for a logically rectangular grid, the UGRID file format(12.8.4) for unstructured grid and the GRIDSPEC Mosaic file format(12.8.5) for cubed-sphere grid. For the GRIDSPEC Mosaic file format, the data are stored in separate data files, one file per tile. The SCRIP format(12.8.1) and the ESMF unstructured grid format(12.8.2) are not supported because there is no way to define a variable field using these two formats. Currently, the tool only works with 2D grids, the support for the 3D grid will be made available in the future release. The variable array can be up to four dimensions. The variable type is currently limited to single or double precision real numbers. The support for other data types, such as integer or short will be added in the future release.

The user interface of this tool is greatly simplified from `ESMF_RegridWeightGen`. User only needs to provide two input file names, the source and the destination variable names and the regrid method. The tool will figure out the type of the grid file automatically based on the attributes of the variable. If the variable has a `coordinates` attribute, the grid file is a GRIDSPEC file and the value of the `coordinates` defines the longitude and latitude variable's names. For example, following is a simple GRIDSPEC file with a variable named `PSL` and coordinate variables named `lon` and `lat`.

```
netcdf simple_gridspec {
dimensions:
      lat = 192 ;
      lon = 288 ;
variables:
      float PSL(lat, lon) ;
         PSL:time = 50. ;
         PSL:units = "Pa" ;
         PSL:long_name = "Sea level pressure" ;
         PSL:cell_method = "time: mean" ;
         PSL:coordinates = "lon lat" ;
      double lat(lat) ;
         lat:long_name = "latitude" ;
         lat:units = "degrees_north" ;
      double lon(lon) ;
         lon:long_name = "longitude" ;
         lon:units = "degrees_east" ;
}
```

If the variable has a `mesh` attribute and a `location` attribute, the grid file is in UGRID format(12.8.4). The value of `mesh` attribute is the name of a dummy variable that defines the mesh topology. If the application performs a conservative regridding, the value of the `location` attribute has to be `face`, otherwise, it has to be `node`. This is because ESMF only supports non-conservative regridding on the data stored at the nodes of a ESMF_Mesh object, and conservative regridding on the data stored at the cells of a ESMF_Mesh object.

Here is an example 2D UGRID file:

```
netcdf simple_ugrid {
dimensions:
      node = 4176 ;
      nele = 8268 ;
      three = 3 ;
      time  = 2 ;
variables:
      float lon(node) ;
         lon:units = "degrees_east" ;
      float lat(node) ;
         lat:units = "degrees_north" ;
      float lonc(nele) ;
         lonc:units = "degrees_east" ;
      float latc(nele) ;
         latc:units = "degrees_north" ;
      int nv(nele, three) ;
         nv:standard_name = "face_node_connectivity" ;
```

```
         nv:start_index = 1. ;
      float zeta(time, node) ;
         zeta:standard_name = "sea_surface_height_above_geoid" ;
         zeta:_FillValue = -999. ;
         zeta:location = "node" ;
         zeta:mesh = "fvcom_mesh" ;
      float ua(time, nele) ;
         ua:standard_name = "barotropic_eastward_sea_water_velocity" ;
         ua:_FillValue = -999. ;
         ua:location = "face" ;
         ua:mesh = "fvcom_mesh" ;
      float va(time, nele) ;
         va:standard_name = "barotropic_northward_sea_water_velocity" ;
         va:_FillValue = -999. ;
         va:location = "face" ;
         va:mesh = "fvcom_mesh" ;
      int fvcom_mesh(node) ;
         fvcom_mesh:cf_role = "mesh_topology" ;
         fvcom_mesh:dimension = 2. ;
         fvcom_mesh:locations = "face node" ;
         fvcom_mesh:node_coordinates = "lon lat" ;
         fvcom_mesh:face_coordinates = "lonc latc" ;
         fvcom_mesh:face_node_connectivity = "nv" ;
}
```

There are three variables defined in the above UGRID file - `zeta` on the node of the mesh, `ua` and `va` on the face of the mesh. All three variables have one extra time dimension.

The GRIDSPEC MOSAIC file(12.8.5) can be identified by a dummy variable with `standard_name` attribute set to `grid_mosaic_spec`. The data for a GRIDSPEC Mosaic file are stored in separate files, one tile per file. The name of the data file is not specified in the mosaic file. Therefore, additional optional argument `-srcdatafile` or `-dstdatafile` is required to provide the prefix of the datafile. The datafile is also a CF compliant NetCDF file. The complete name of the datafile is constructed by appending the tilename (defined in the Mosaic file in a variable specified by the `children` attribute of the dummy variable). For instance, if the prefix of the datafile is `mosaicdata`, then the datafile names are `mosaicdata.tile1.nc`, `mosaicdata.tile2.nc`, etc... using the mosaic file example in 12.8.5. The path of the datafile is defined by `gridlocation` variable, similar to the tile files. To overwrite it, an optional argument `tilefile_path` can be specified.

Following is an example GRIDSPEC MOSAIC datafile:

```
netcdf mosaictest.tile1 {
dimensions:
     grid_yt = 48 ;
     grid_xt = 48 ;
     time = UNLIMITED ; // (12 currently)
variables:
     float area_land(grid_yt, grid_xt) ;
        area_land:long_name = "area in the grid cell" ;
        area_land:units = "m2" ;
     float evap_land(time, grid_yt, grid_xt) ;
        evap_land:long_name = "vapor flux up from land" ;
        evap_land:units = "kg/(m2 s)" ;
```

```
        evap_land:coordinates = "geolon_t geolat_t" ;
     double geolat_t(grid_yt, grid_xt) ;
        geolat_t:long_name = "latitude of grid cell centers" ;
        geolat_t:units = "degrees_N" ;
     double geolon_t(grid_yt, grid_xt) ;
        geolon_t:long_name = "longitude of grid cell centers" ;
        geolon_t:units = "degrees_E" ;
     double time(time) ;
        time:long_name = "time" ;
        time:units = "days since 1900-01-01 00:00:00" ;
}
```

This is a database for the C48 Cubed Sphere grid defined in 12.8.5. Note currently we assume that the data are located at the center stagger of the grid. The coordinate variables `geolon_t` and `geolat_t` should be identical to the center coordinates defined in the corresponding tile files. They are not used to create the multi-tile grid. For this application, they are only used to construct the analytic field to check the correctness of the regridding results if `-check` argument is given.

If the variable specified for the destination file does not already exist in the file, the file type is determined as follows: First search for a variable that has a `cf_role` attribute of value `mesh_topology`. If successful, the file is a UGRID file. The destination variable will be created on the nodes if the regrid method is non-conservative and an optional argument `dst_loc` is set to `corner`. Otherwise, the destination variable will be created on the face. If the destination file is not a UGRID file, check if there is a variable with its `units` attribute set to `degrees_east` and another variable with it's `units` attribute set to `degrees_west`. If such a pair is found, the file is a GRIDSPEC file and the above two variables will be used as the coordinate variables for the variable to be created. If more than one pair of coordinate variables are found in the file, the application will fail with an error message.

If the destination variable exists in the destination grid file, it has to have the same number of dimensions and the same type as the source variable. Except for the latitude and longitude dimensions, the size of the destination variable's extra dimensions (e.g., time and vertical layers) has to match with the source variable. If the destination variable does not exist in the destination grid file, a new variable will be created with the same type and matching dimensions as the source variable. All the attributes of the source variable will be copied to the destination variable except those related to the grid definition (i.e. `coordinates` attribute if the destination file is in GRIDSPEC or MOSAIC format or `mesh` and `location` attributes if the destination file is in UGRID format.

Additional rules beyond the CF convention are adopted to determine whether there is a time dimension defined in the source and destination files. In this application, only a dimension with a name `time` is considered as a time dimension. If the source variable has a `time` dimension and the destination variable is not already defined, the application first checks if there is a `time` dimension defined in the destination file. If so, the values of the `time` dimension in both files have to be identical. If the time dimension values don't match, the application terminates with an error message. The application does not check the existence of a `time` variable or if the `units` attribute of the `time` variable match in two input files. If the destination file does not have a `time` dimension, it will be created. UNLIMITED time dimension is allowed in the source file, but the `time` dimension created in the destination file is not UNLIMITED.

This application requires the NetCDF library to read the grid files and write out the interpolated variables. To compile ESMF with the NetCDF library, please refer to the "Third Party Libraries" Section in the ESMF User's Guide for more information.

Internally this application uses the ESMF public API to perform regridding. If a source or destination grid is logically rectangular, then `ESMF_GridCreate()` (32.6.13) is used to create an ESMF_Grid object from the file. The coordinate variables are stored at the center stagger location (`ESMF_STAGGERLOC_CENTER`). If the application performs a conservative regridding, the `addCornerStager` argument is set to `TRUE` and the bound variables in the grid file will be read in and stored at the corner stagger location (`ESMF_STAGGERLOC_CORNER`). If the variable has an

_FillValue attribute defined, a mask will be generated using the missing values of the variable. The data variable is defined as a ESMF_Field object at the center stagger location (ESMF_STAGGERLOC_CENTER) of the grid.

If the source grid is an unstructured grid and the the regrid method is nearest neighbor, or if the destination grid is unstructured and the regrid method is non-conservative, ESMF_LocStreamCreate()(33.4.14 is used to create an ESMF_LocStream object. Otherwise, ESMF_MeshCreate()(34.4.8) is used to create an ESMF_Mesh object for the unstructured input grids. Currently, only the 2D unstructured grid is supported. If the application performs a conservative regridding, the variable has to be defined on the face of the mesh cells, i.e., its location attribute has to be set to face. Otherwise, the variable has to be defined on the node and its (location attribute is set to node).

If a source or a destination grid is a Cubed Sphere grid defined in GRIDSPEC MOSAIC file format, ESMF_GridCreateMosaic()(32.6.28) will be used to create a multi-tile ESMF_Grid object from the file. The coordinates at the center and the corner stagger in the tile files will be stored in the grid. The data has to be located at the center stagger of the grid.

Similar to the ESMF_RegridWeightGen command line tool (Section 12), this application supports bilinear, patch, nearest neighbor, first-order and second-order conservative interpolation. The descriptions of different interpolation methods can be found at Section 25.2 and Section 12. It also supports different pole methods for non-conservative interpolation and allows user to choose to ignore the errors when some of the destination points cannot be mapped by any source points.

If the optional argument -check is given, the interpolated fields will be checked agaist a synthetic field defined as follows:

13.2 Usage

The command line arguments are all keyword based. Both the long keyword prefixed with '--' or the one character short keyword prefixed with '-' are supported. The format to run the command line tool is as follows:

```
ESMF_Regrid
        --source|-s src_grid_filename
        --destination|-d dst_grid_filename
--src_var var_name[,var_name,..]
--dst_var var_name[,var_name,..]
        [--srcdatafile]
        [--dstdatafile]
        [--tilefile_path filepath]
        [--dst_loc center|corner]
        [--method|-m bilinear|patch|nearestdtos|nearststod|conserve|conserve2nd]
        [--pole|-p none|all|teeth|1|2|..]
        [--ignore_unmapped|-i]
        [--ignore_degenerate]
        [-r]
        [--src_regional]
        [--dst_regional]
        [--check]
        [--no_log]
        [--help|-h]
        [--version]
```

```
        [-V]
where
  --source or -s      - a required argument specifying the source grid
                        file name

  --destination or -d - a required argument specifying the destination
                        grid file name

  --src_var           - a required argument specifying the variable names
                        in the src grid file to be interpolated from.  If more
                        than one, separated them with comma.

  --dst_var           - a required argument specifying the variable names
                        to be interpolated to.  If more than one, separated
                        them with comma. The variable may or may not
                        exist in the destination grid file.

  --srcdatafile       - If the source grid is a GRIDSPEC MOSAIC grid, the data
                        is stored in separate files, one per tile. srcdatafile
                        is the prefix of the source data file.  The filename
                        is srcdatafile.tilename.nc, where tilename is the tile
                        name defined in the MOSAIC file.

  --dstdatafile       - If the destination grid is a GRIDSPEC MOSAIC grid, the data
                        is stored in separate files, one per tile. dstdatafile
                        is the prefix of the destination data file.  The filename
                        is dstdatafile.tilename.nc, where tilename is the tile
                        name defined in the MOSAIC file.

  --tilefile_path    - the alternative file path for the tile files and the
                        data files when either the source or the destination grid
                        is a GRIDSPEC MOSAIC grid.  The path can be either relative
                        or absolute.  If it is relative, it is relative to the
                        working directory.  When specified, the gridlocation variable
                        defined in the Mosaic file will be ignored.

    --dst_loc         - an optional argument that specifies whether the destination
                        variable is located at the center or the corner of the grid
                        if the destination variable does not exist in the destination
                        grid file. This flag is only required for non-conservative
                        regridding when the destination grid is in UGRID format.
                        For all other cases, only the center location is supported
                        that is also the default value if this argument is not specified.

  --method or -m      - an optional argument specifying which interpolation
                        method is used. The value can be one of the following:

                        bilinear   - for bilinear interpolation, also the
                                     default method if not specified.
                        patch      - for patch recovery interpolation
                        nearstdtos - for nearest destination to source interpolation
```

```
                        nearststod - for nearest source to destination interpolation
                        conserve   - for first-order conservative interpolation

--pole or -p        - an optional argument indicating what to do with
                      the pole.
                      The value can be one of the following:

                      none  - No pole, the source grid ends at the top
                              (and bottom) row of nodes specified in
                              <source grid>.
                      all   - Construct an artificial pole placed in the
                              center of the top (or bottom) row of nodes,
                              but projected onto the sphere formed by the
                              rest of the grid. The value at this pole is
                              the average of all the pole values. This
                              is the default option.

                      teeth - No new pole point is constructed, instead
                              the holes at the poles are filled by
                              constructing triangles across the top and
                              bottom row of the source Grid. This can be
                              useful because no averaging occurs, however,
                              because the top and bottom of the sphere are
                              now flat, for a big enough mismatch between
                              the size of the destination and source pole
                              regions, some destination points may still
                              not be able to be mapped to the source Grid.

                      <N>   - Construct an artificial pole placed in the
                              center of the top (or bottom) row of nodes,
                              but projected onto the sphere formed by the
                              rest of the grid. The value at this pole is
                              the average of the N source nodes next to
                              the pole and surrounding the destination
                              point (i.e.  the value may differ for each
                              destination point. Here N ranges from 1 to
                              the number of nodes around the pole.

  --ignore_unmapped
         or
         -i         - ignore unmapped destination points. If not specified
                      the default is to stop with an error if an unmapped
                      point is found.

  --ignore_degenerate - ignore degenerate cells in the input grids. If not specified
                      the default is to stop with an error if an degenerate
                      cell is found.

  -r                 - an optional argument specifying that the source and
                      destination grids are regional grids.  If the argument
                      is not given, the grids are assumed to be global.
```

```
--src_regional    - an optional argument specifying that the source is
                    a regional grid and the destination is a global grid.

--dst_regional    - an optional argument specifying that the destination
                    is a regional grid and the source is a global grid.

--check           - Check the correctness of the interpolated destination
                    variables against an analytic field. The source variable
                    has to be synthetically constructed using the same analytic
                    method in order to perform meaningful comparison.
                    The analytic field is calculated based on the coordinate
                    of the data point.  The formular is as follows:
                    data(i,j,k,l)=2.0+cos(lat(i,j))**2*cos(2.0*lon(i,j))+(k-1)+2*(l-1)
                    The data field can be up to four dimensional with the
                    first two dimension been longitude and latitude.
                    The mean relative error between the destination and
                    analytic field is computed.

 --no_log         - Turn off the ESMF error log.

 --help or -h     - Print the usage message and exit.

 --version        - Print ESMF version and license information and exit.

 -V               - Print ESMF version number and exit.
```

13.3 Examples

The example below regrids the node variable `zeta` defined in the sample UGRID file(13.1) to the destination grid defined in the sample GRIDSPEC file(13.1) using bilinear regridding method and write the interpolated data into a variable named `zeta`.

```
mpirun -np 4 ESMF_Regrid -s simple_ugrid.nc -d simple_gridspec.nc \
              --src_var zeta --dst_var zeta
```

In this case, the destination variable does not exist in `simple_ugrid.nc` and the `time` dimension is not defined in the destination file. The resulting output file has a new time dimension and a new variable `zeta`. The attributes from the source variable `zeta` are copied to the destination variable except for `mesh` and `location`. A new attribute `coordinates` is created for the destination variable to specify the names of the coordinate variables. The header of the output file looks like:

```
netcdf simple_gridspec {
dimensions:
      lat = 192 ;
      lon = 288 ;
      time = 2  ;
```

```
variables:
      float PSL(lat, lon) ;
         PSL:time = 50. ;
         PSL:units = "Pa" ;
         PSL:long_name = "Sea level pressure" ;
         PSL:cell_method = "time: mean" ;
         PSL:coordinates = "lon lat" ;
      double lat(lat) ;
         lat:long_name = "latitude" ;
         lat:units = "degrees_north" ;
      double lon(lon) ;
         lon:long_name = "longitude" ;
         lon:units = "degrees_east" ;
      float zeta(time, lat, lon) ;
         zeta:standard_name = "sea_surface_height_above_geoid" ;
         zeta:_FillValue = -999. ;
         zeta:coordinates = "lon lat" ;
}
```

The next example shows the command to do the same thing as the previous example but for a different variable `ua`. Since `ua` is defined on the face, we can only do a conservative regridding.

```
  mpirun -np 4 ESMF_Regrid -s simple_ugrid.nc -d simple_gridspec.nc \
               --src_var ua --dst_var ua -m conserve
```

14 ESMF_Scrip2Unstruct

14.1 Description

The `ESMF_Scrip2Unstruct` application is a parallel program that converts a SCRIP format grid file 12.8.1 into an unstructured grid file in the ESMF unstructured file format 12.8.2 or in the UGRID file format 12.8.4. This application program can be used together with `ESMF_RegridWeightGen` 12 application for the unstructured SCRIP format grid files. An unstructured SCRIP grid file will be converted into the ESMF unstructured file format internally in `ESMF_RegridWeightGen`. The conversion subroutine used in `ESMF_RegridWeightGen` is sequential and could be slow if the grid file is very big. It will be more efficient to run the `ESMF_Scrip2Unstruct` first and then regrid the output ESMF or UGRID file using `ESMF_RegridWeightGen`. Note that a logically rectangular grid file in the SCRIP format (i.e. the dimension `grid_rank` is equal to 2) can also be converted into an unstructured grid file with this application.

The application usage is as follows:

```
ESMF_Scrip2Unstruct  inputfile outputfile dualflag [fileformat]

where
  inputfile       - a SCRIP format grid file

  outputfile      - the output file name
```

```
dualflag        - 0 for straight conversion and 1 for dual
  mesh.  A dual mesh is a mesh constructed
                 by putting the corner coordinates in the
                 center of the elements and using the
  center coordinates to form the mesh
  corner vertices.

fileformat      - an optional argument for the output file
  format.  It could be either ESMF or UGRID.
                 If not specified, the output file is in
  the ESMF format.
```

Part III

Superstructure

15 Overview of Superstructure

ESMF superstructure classes define an architecture for assembling Earth system applications from modeling **components**. A component may be defined in terms of the physical domain that it represents, such as an atmosphere or sea ice model. It may also be defined in terms of a computational function, such as a data assimilation system. Earth system research often requires that such components be **coupled** together to create an application. By coupling we mean the data transformations and, on parallel computing systems, data transfers, that are necessary to allow data from one component to be utilized by another. ESMF offers regridding methods and other tools to simplify the organization and execution of inter-component data exchanges.

In addition to components defined at the level of major physical domains and computational functions, components may be defined that represent smaller computational functions within larger components, such as the transformation of data between the physics and dynamics in a spectral atmosphere model, or the creation of nested higher resolution regions within a coarser grid. The objective is to couple components at varying scales both flexibly and efficiently. ESMF encourages a hierarchical application structure, in which large components branch into smaller sub-components (see Figure 2). ESMF also makes it easier for the same component to be used in multiple contexts without changes to its source code.

Key Features
Modular, component-based architecture.
Hierarchical assembly of components into applications.
Use of components in multiple contexts without modification.
Sequential or concurrent component execution.
Single program, multiple datastream (SPMD) applications for maximum portability and reconfigurability.
Multiple program, multiple datastream (MPMD) option for flexibility.

15.1 Superstructure Classes

There are a small number of classes in the ESMF superstructure:

- **Component** An ESMF component has two parts, one that is supplied by ESMF and one that is supplied by the user. The part that is supplied by the framework is an ESMF derived type that is either a Gridded Component (**GridComp**) or a Coupler Component (**CplComp**). A Gridded Component typically represents a physical domain in which data is associated with one or more grids - for example, a sea ice model. A Coupler Component arranges and executes data transformations and transfers between one or more Gridded Components. Gridded Components and Coupler Components have standard methods, which include initialize, run, and finalize. These methods can be multi-phase.

  The second part of an ESMF Component is user code, such as a model or data assimilation system. Users set entry points within their code so that it is callable by the framework. In practice, setting entry points means that within user code there are calls to ESMF methods that associate the name of a Fortran subroutine with a corresponding standard ESMF operation. For example, a user-written initialization routine called `myOceanInit` might be associated with the standard initialize routine of an ESMF Gridded Component named "myOcean" that represents an ocean model.

- **State** ESMF Components exchange information with other Components only through States. A State is an ESMF derived type that can contain Fields, FieldBundles, Arrays, ArrayBundles, and other States. A Component is associated with two States, an **Import State** and an **Export State**. Its Import State holds the data that it receives from other Components. Its Export State contains data that it makes available to other Components.

Figure 2: ESMF enables applications such as the atmospheric general circulation model GEOS-5 to be structured hierarchically, and reconfigured and extended easily. Each box in this diagram is an ESMF Gridded Component.

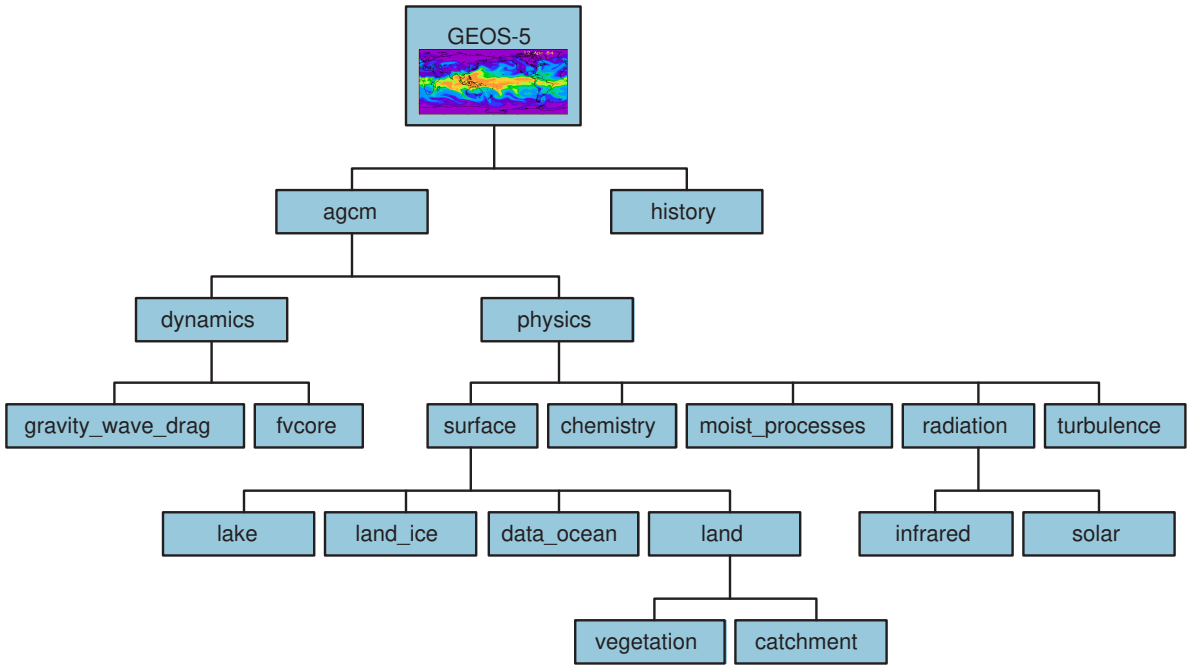

An ESMF coupled application typically involves a parent Gridded Component, two or more child Gridded Components and one or more Coupler Components.

The parent Gridded Component is responsible for creating the child Gridded Components that are exchanging data, for creating the Coupler, for creating the necessary Import and Export States, and for setting up the desired sequencing. The application's "main" routine calls the parent Gridded Component's initialize, run, and finalize methods in order to execute the application. For each of these standard methods, the parent Gridded Component in turn calls the corresponding methods in the child Gridded Components and the Coupler Component. For example, consider a simple coupled ocean/atmosphere simulation. When the initialize method of the parent Gridded Component is called by the application, it in turn calls the initialize methods of its child atmosphere and ocean Gridded Components, and the initialize method of an ocean-to-atmosphere Coupler Component. Figure 3 shows this schematically.

15.2 Hierarchical Creation of Components

Components are allocated computational resources in the form of **Persistent Execution Threads**, or **PET**s. A list of a Component's PETs is contained in a structure called a **Virtual Machine**, or **VM**. The VM also contains information about the topology and characteristics of the underlying computer. Components are created hierarchically, with parent Components creating child Components and allocating some or all of their PETs to each one. By default ESMF creates a new VM for each child Component, which allows Components to tailor their VM resources to match their needs. In some cases, a child may want to share its parent's VM - ESMF supports this, too.

Figure 3: A call to a standard ESMF initialize (run, finalize) method by a parent component triggers calls to initialize (run, finalize) all of its child components.

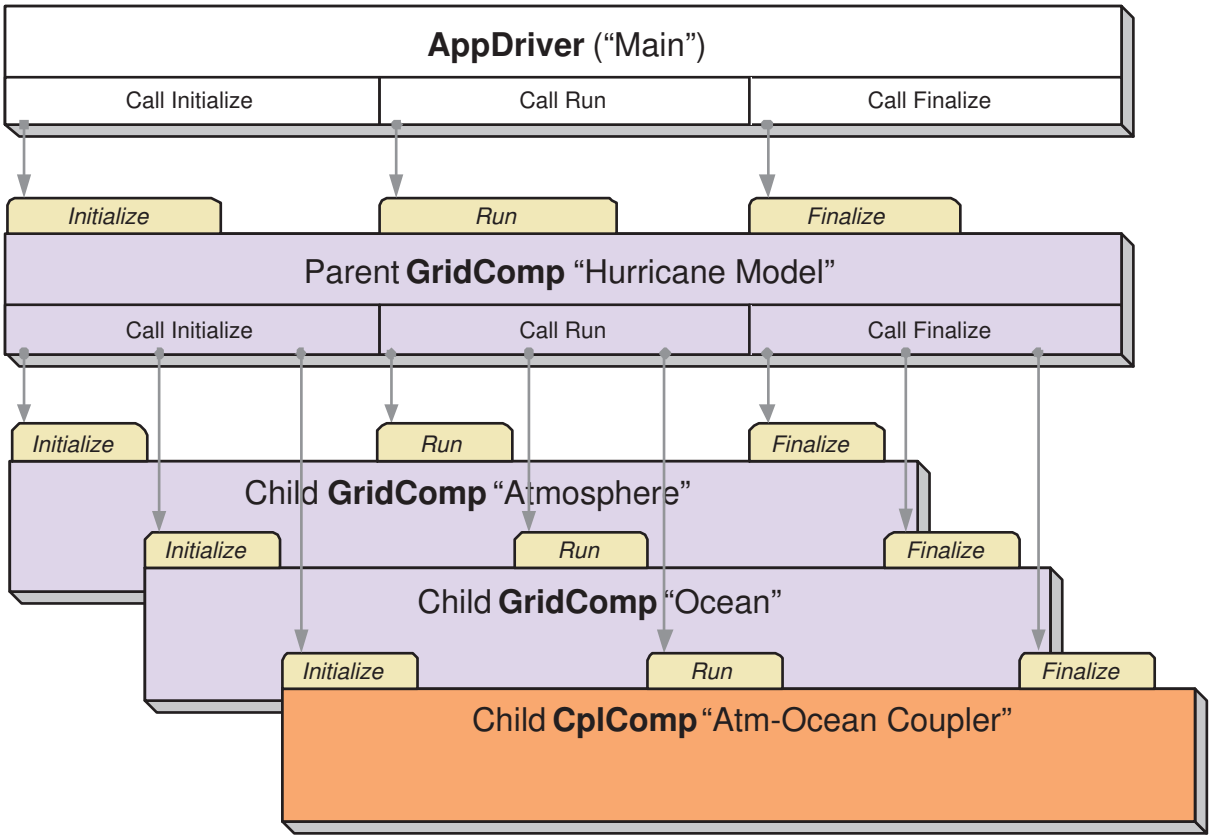

A Gridded Component may exist across all the PETs in an application. A Gridded Component may also reside on a subset of PETs in an application. These PETs may wholly coincide with, be wholly contained within, or wholly contain another Component.

15.3 Sequential and Concurrent Execution of Components

When a set of Gridded Components and a Coupler runs in sequence on the same set of PETs the application is executing in a **sequential** mode. When Gridded Components are created and run on mutually exclusive sets of PETs, and are coupled by a Coupler Component that extends over the union of these sets, the mode of execution is **concurrent**.

Figure 4 illustrates a typical configuration for a simple coupled sequential application, and Figure 5 shows a possible configuration for the same application running in a concurrent mode.

Parent Components can select if and when to wait for concurrently executing child Components, synchronizing only when required.

It is possible for ESMF applications to contain some Component sets that are executing sequentially and others that are executing concurrently. We might have, for example, atmosphere and land Components created on the same subset of PETs, ocean and sea ice Components created on the remainder of PETs, and a Coupler created across all the PETs in the application.

15.4 Intra-Component Communication

All data transfers within an ESMF application occur *within* a component. For example, a Gridded Component may contain halo updates. Another example is that a Coupler Component may redistribute data between two Gridded Components. As a result, the architecture of ESMF does not depend on any particular data communication mechanism, and new communication schemes can be introduced without affecting the overall structure of the application.

Since all data communication happens within a component, a Coupler Component must be created on the union of the PETs of all the Gridded Components that it couples.

15.5 Data Distribution and Scoping in Components

The scope of distributed objects is the VM of the currently executing Component. For this reason, all PETs in the current VM must make the same distributed object creation calls. When a Coupler Component running on a superset of a Gridded Component's PETs needs to make communication calls involving objects created by the Gridded Component, an ESMF-supplied function called `ESMF_StateReconcile()` creates proxy objects for those PETs that had no previous information about the distributed objects. Proxy objects contain no local data but can be used in communication calls (such as regrid or redistribute) to describe the remote source for data being moved to the current PET, or to describe the remote destination for data being moved from the local PET. Figure 6 is a simple schematic that shows the sequence of events in a reconcile call.

15.6 Performance

The ESMF design enables the user to configure ESMF applications so that data is transferred directly from one component to another, without requiring that it be copied or sent to a different data buffer as an interim step. This is likely to be the most efficient way of performing inter-component coupling. However, if desired, an application can also be configured so that data from a source component is sent to a distinct set of Coupler Component PETs for processing before being sent to its destination.

The ability to overlap computation with communication is essential for performance. When running with ESMF the user can initiate data sends during Gridded Component execution, as soon as the data is ready. Computations can then proceed simultaneously with the data transfer.

Figure 4: Schematic of the run method of a coupled application, with an "Atmosphere" and an "Ocean" Gridded Component running sequentially with an "Atm-Ocean Coupler." The top-level "Hurricane Model" Gridded Component contains the sequencing information and time advancement loop. The application driver, Coupler, and all Gridded Components are distributed over nine PETs.

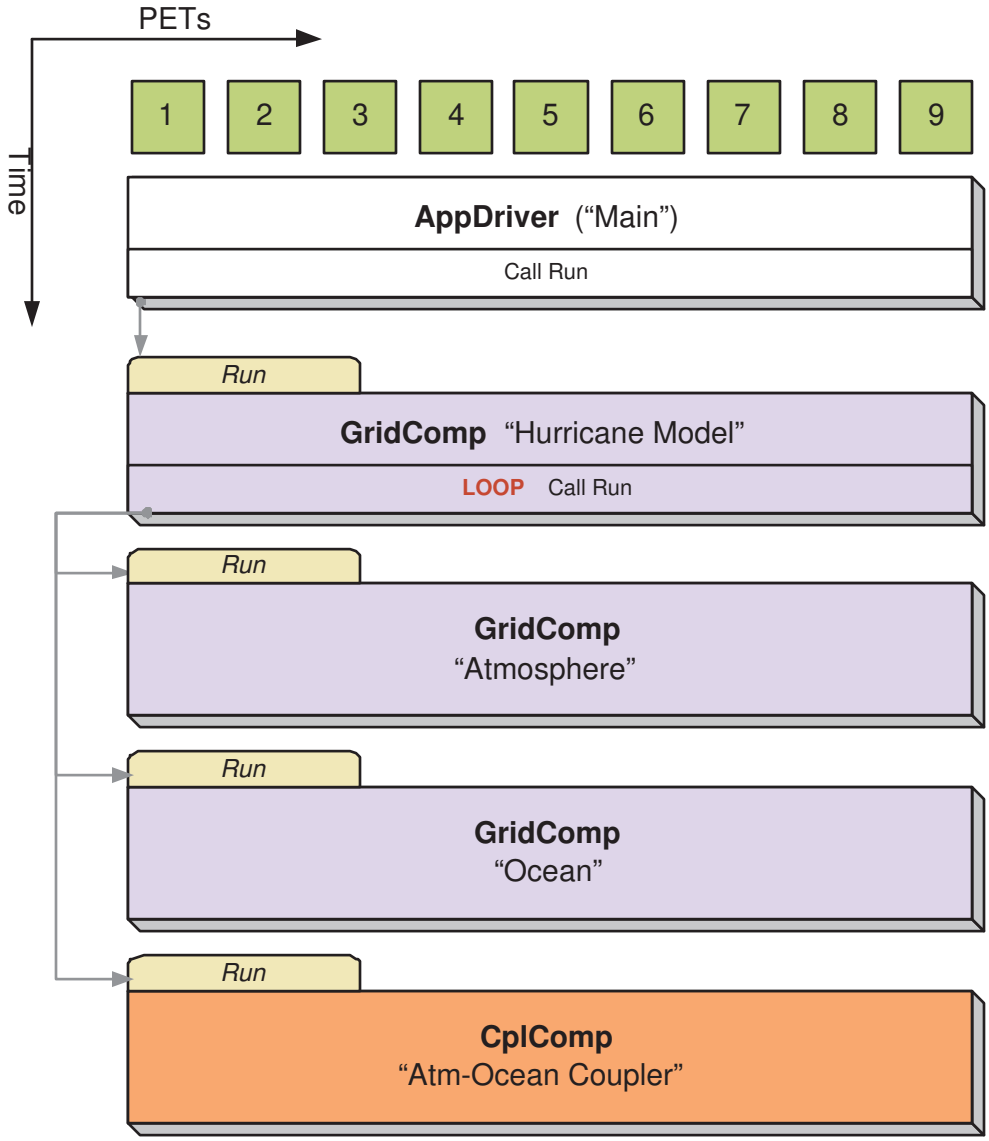

Figure 5: Schematic of the run method of a coupled application, with an "Atmosphere" and an "Ocean" Gridded Component running concurrently with an "Atm-Ocean Coupler." The top-level "Hurricane Model" Gridded Component contains the sequencing information and time advancement loop. The application driver, Coupler, and top-level "Hurricane Model" Gridded Component are distributed over nine PETs. The "Atmosphere" Gridded Component is distributed over three PETs and the "Ocean" Gridded Component is distributed over six PETs.

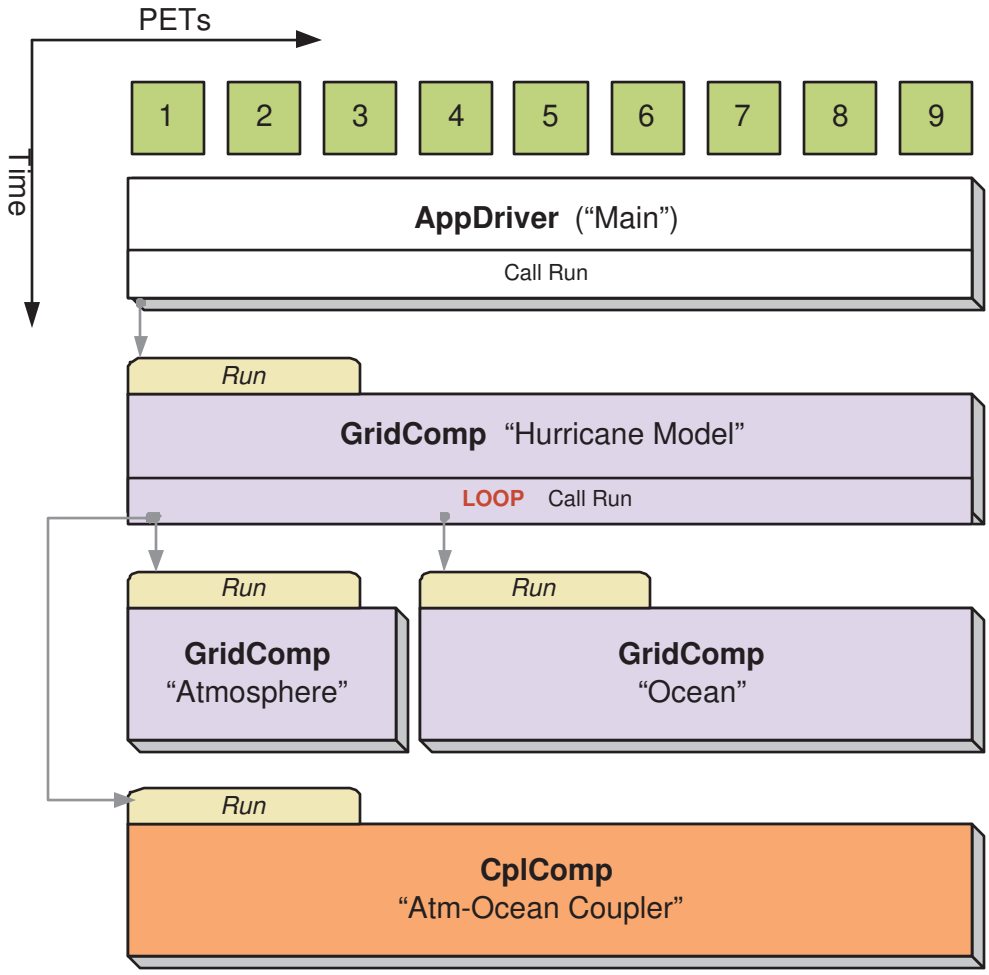

Figure 6: An `ESMF_StateReconcile()` call creates proxy objects for use in subsequent communication calls. The reconcile call would normally be made during Coupler initialization.

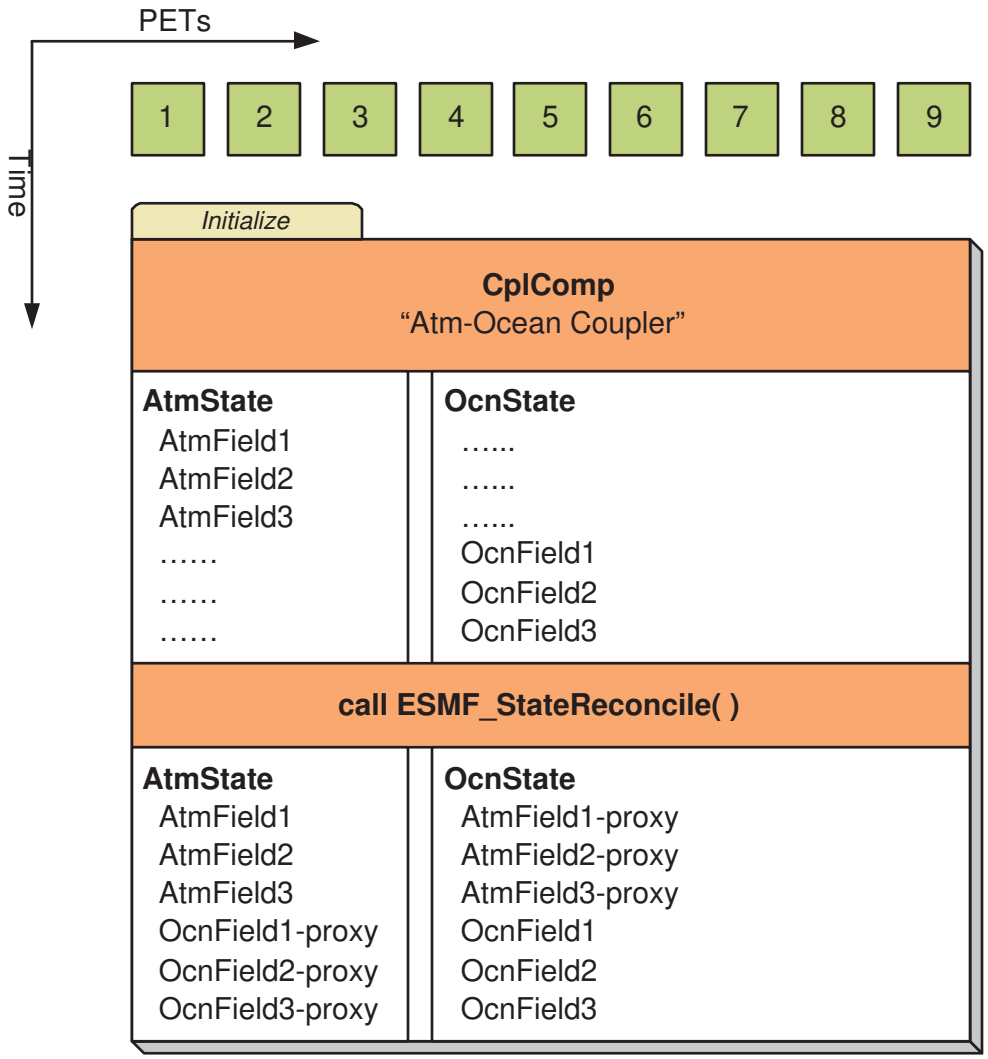

15.7 Object Model

The following is a simplified Unified Modeling Language (UML) diagram showing the relationships among ESMF superstructure classes. See Appendix A, *A Brief Introduction to UML*, for a translation table that lists the symbols in the diagram and their meaning.

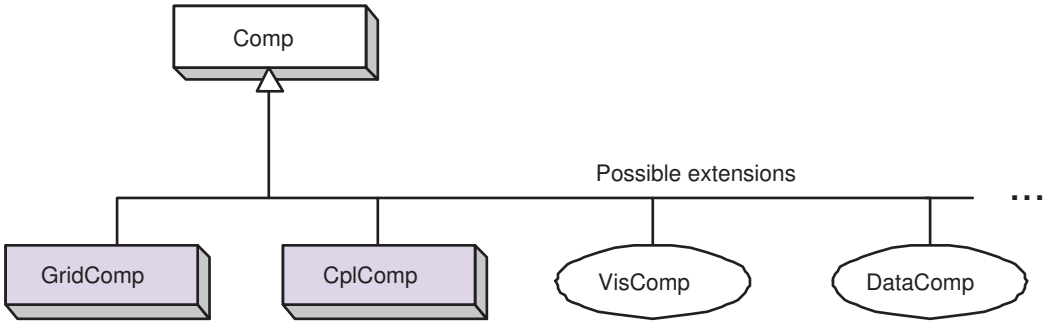

16 Application Driver and Required ESMF Methods

16.1 Description

Every ESMF application needs a driver code. Typically the driver layer is implemented as the "main" of the application, although this is not strictly an ESMF requirement. For most ESMF applications the task of the application driver will be very generic: Initialize ESMF, create a top-level Component and call its Initialize, Run and Finalize methods, before destroying the top-level Component again and calling ESMF Finalize.

ESMF provides a number of different application driver templates in the `$ESMF_DIR/src/Superstructure/AppDriver` directory. An appropriate one can be chosen depending on how the application is to be structured:

Sequential vs. Concurrent Execution In a sequential execution model, every Component executes on all PETs, with each Component completing execution before the next Component begins. This has the appeal of simplicity of data consumption and production: when a Gridded Component starts, all required data is available for use, and when a Gridded Component finishes, all data produced is ready for consumption by the next Gridded Component. This approach also has the possibility of less data movement if the grid and data decomposition is done such that each processor's memory contains the data needed by the next Component.

In a concurrent execution model, subgroups of PETs run Gridded Components and multiple Gridded Components are active at the same time. Data exchange must be coordinated between Gridded Components so that data deadlock does not occur. This strategy has the advantage of allowing coupling to other Gridded Components at any time during the computational process, including not having to return to the calling level of code before making data available.

Pairwise vs. Hub and Spoke Coupler Components are responsible for taking data from one Gridded Component and putting it into the form expected by another Gridded Component. This might include regridding, change of units, averaging, or binning.

Coupler Components can be written for *pairwise* data exchange: the Coupler Component takes data from a single Component and transforms it for use by another single Gridded Component. This simplifies the structure of the Coupler Component code.

Couplers can also be written using a *hub and spoke* model where a single Coupler accepts data from all other Components, can do data merging or splitting, and formats data for all other Components.

Multiple Couplers, using either of the above two models or some mixture of these approaches, are also possible.

Implementation Language The ESMF framework currently has Fortran interfaces for all public functions. Some functions also have C interfaces, and the number of these is expected to increase over time.

Number of Executables The simplest way to run an application is to run the same executable program on all PETs. Different Components can still be run on mutually exclusive PETs by using branching (e.g., if this is PET 1, 2, or 3, run Component A, if it is PET 4, 5, or 6 run Component B). This is a **SPMD** model, Single Program Multiple Data.

The alternative is to start a different executable program on different PETs. This is a **MPMD** model, Multiple Program Multiple Data. There are complications with many job control systems on multiprocessor machines in getting the different executables started, and getting inter-process communications established. ESMF currently has some support for MPMD: different Components can run as separate executables, but the Coupler that transfers data between the Components must still run on the union of their PETs. This means that the Coupler Component must be linked into all of the executables.

16.2 Constants

16.2.1 ESMF_END

DESCRIPTION:
The `ESMF_End_Flag` determines how an ESMF application is shut down.

The type of this flag is:

`type(ESMF_End_Flag)`

The valid values are:

ESMF_END_ABORT Global abort of the ESMF application. There is no guarantee that all PETs will shut down cleanly during an abort. However, all attempts are made to prevent the application from hanging and the LogErr of at least one PET will be completely flushed during the abort. This option should only be used if a condition is detected that prevents normal continuation or termination of the application. Typical conditions that warrant the use of `ESMF_END_ABORT` are those that occur on a per PET basis where other PETs may be blocked in communication calls, unable to reach the normal termination point. An aborted application returns to the parent process with a system dependent indication that a failure occurred during execution.

ESMF_END_NORMAL Normal termination of the ESMF application. Wait for all PETs of the global VM to reach `ESMF_Finalize()` before termination. This is the clean way of terminating an application. `MPI_Finalize()` will be called in case of MPI applications.

ESMF_END_KEEPMPI Same as `ESMF_END_NORMAL` but `MPI_Finalize()` will *not* be called. It is the user code's responsibility to shut down MPI cleanly if necessary.

16.3 Use and Examples

ESMF encourages application organization in which there is a single top-level Gridded Component. This provides a simple, clear sequence of operations at the highest level, and also enables the entire application to be treated as a sub-Component of another, larger application if desired. When a simple application is organized in this fashion the standard AppDriver can probably be used without much modification.

Examples of program organization using the AppDriver can be found in the `src/Superstructure/AppDriver` directory. A set of subdirectories within the AppDriver directory follows the naming convention:

```
<seq|concur>_<pairwise|hub>_<f|c>driver_<spmd|mpmd>
```

The example that is currently implemented is `seq_pairwise_fdriver_spmd`, which has sequential component execution, a pairwise coupler, a main program in Fortran, and all processors launching the same executable. It is also copied automatically into a top-level `quick_start` directory at compilation time.

The user can copy the AppDriver files into their own local directory. Some of the files can be used unchanged. Others are template files which have the rough outline of the code but need additional application-specific code added in order to perform a meaningful function. The `README` file in the AppDriver subdirectory or `quick_start` directory contains instructions about which files to change.

Examples of concurrent component execution can be found in the system tests that are bundled with the ESMF distribution.

```
  ------------------------------------------------------------------------------
  ------------------------------------------------------------------------------
   EXAMPLE:  This is an AppDriver.F90 file for a sequential ESMF application.
  ------------------------------------------------------------------------------
  ------------------------------------------------------------------------------

    The ChangeMe.F90 file that's included below contains a number of
    definitions that are used by the AppDriver, such as the name of the
    application's main configuration file and the name of the application's
    SetServices routine.  This file is in the same directory as the
    AppDriver.F90 file.
  ------------------------------------------------------------------------------

 #include "ChangeMe.F90"

     program ESMF_AppDriver
 #define ESMF_METHOD "program ESMF_AppDriver"

 #include "ESMF.h"

     ! ESMF module, defines all ESMF data types and procedures
     use ESMF

     ! Gridded Component registration routines.  Defined in "ChangeMe.F90"
     use USER_APP_Mod, only : SetServices => USER_APP_SetServices

     implicit none

  ------------------------------------------------------------------------------
```

```
  Define local variables
------------------------------------------------------------------------

   ! Components and States
   type(ESMF_GridComp) :: compGridded
   type(ESMF_State) :: defaultstate

   ! Configuration information
   type(ESMF_Config) :: config

   ! A common Grid
   type(ESMF_Grid) :: grid

   ! A Clock, a Calendar, and timesteps
   type(ESMF_Clock) :: clock
   type(ESMF_TimeInterval) :: timeStep
   type(ESMF_Time) :: startTime
   type(ESMF_Time) :: stopTime

   ! Variables related to the Grid
   integer :: i_max, j_max

   ! Return codes for error checks
   integer :: rc, localrc

------------------------------------------------------------------------
  Initialize ESMF.  Note that an output Log is created by default.
------------------------------------------------------------------------

   call ESMF_Initialize(defaultCalKind=ESMF_CALKIND_GREGORIAN, rc=localrc)
   if (ESMF_LogFoundError(localrc, ESMF_ERR_PASSTHRU, &
       ESMF_CONTEXT, rcToReturn=rc)) &
       call ESMF_Finalize(rc=localrc, endflag=ESMF_END_ABORT)

   call ESMF_LogWrite("ESMF AppDriver start", ESMF_LOGMSG_INFO)

------------------------------------------------------------------------
  Create and load a configuration file.
  The USER_CONFIG_FILE is set to sample.rc in the ChangeMe.F90 file.
  The sample.rc file is also included in the directory with the
  AppDriver.F90 file.
------------------------------------------------------------------------

   config = ESMF_ConfigCreate(rc=localrc)
   if (ESMF_LogFoundError(localrc, ESMF_ERR_PASSTHRU, &
       ESMF_CONTEXT, rcToReturn=rc)) &
       call ESMF_Finalize(rc=localrc, endflag=ESMF_END_ABORT)

   call ESMF_ConfigLoadFile(config, USER_CONFIG_FILE, rc = localrc)
   if (ESMF_LogFoundError(localrc, ESMF_ERR_PASSTHRU, &
       ESMF_CONTEXT, rcToReturn=rc)) &
       call ESMF_Finalize(rc=localrc, endflag=ESMF_END_ABORT)

------------------------------------------------------------------------
  Get configuration information.
```

```
  A configuration file like sample.rc might include:
  - size and coordinate information needed to create the default Grid.
  - the default start time, stop time, and running intervals
    for the main time loop.
-----------------------------------------------------------------------------

   call ESMF_ConfigGetAttribute(config, i_max, label='I Counts:', &
     default=10, rc=localrc)
   if (ESMF_LogFoundError(localrc, ESMF_ERR_PASSTHRU, &
       ESMF_CONTEXT, rcToReturn=rc)) &
       call ESMF_Finalize(rc=localrc, endflag=ESMF_END_ABORT)
   call ESMF_ConfigGetAttribute(config, j_max, label='J Counts:', &
     default=40, rc=localrc)
   if (ESMF_LogFoundError(localrc, ESMF_ERR_PASSTHRU, &
       ESMF_CONTEXT, rcToReturn=rc)) &
       call ESMF_Finalize(rc=localrc, endflag=ESMF_END_ABORT)

-----------------------------------------------------------------------------
  Create the top Gridded Component.
-----------------------------------------------------------------------------

   compGridded = ESMF_GridCompCreate(name="ESMF Gridded Component", &
       rc=localrc)
   if (ESMF_LogFoundError(localrc, ESMF_ERR_PASSTHRU, &
       ESMF_CONTEXT, rcToReturn=rc)) &
       call ESMF_Finalize(rc=localrc, endflag=ESMF_END_ABORT)

   call ESMF_LogWrite("Component Create finished", ESMF_LOGMSG_INFO)

------------------------------------------------------------------------------
  Register the set services method for the top Gridded Component.
------------------------------------------------------------------------------

   call ESMF_GridCompSetServices(compGridded, userRoutine=SetServices, rc=rc)
   if (ESMF_LogFoundError(rc, msg="Registration failed", rcToReturn=rc)) &
       call ESMF_Finalize(rc=localrc, endflag=ESMF_END_ABORT)

------------------------------------------------------------------------------
  Create and initialize a Clock.
------------------------------------------------------------------------------

     call ESMF_TimeIntervalSet(timeStep, s=2, rc=localrc)
     if (ESMF_LogFoundError(localrc, ESMF_ERR_PASSTHRU, &
           ESMF_CONTEXT, rcToReturn=rc)) &
           call ESMF_Finalize(rc=localrc, endflag=ESMF_END_ABORT)

     call ESMF_TimeSet(startTime, yy=2004, mm=9, dd=25, rc=localrc)
     if (ESMF_LogFoundError(localrc, ESMF_ERR_PASSTHRU, &
           ESMF_CONTEXT, rcToReturn=rc)) &
           call ESMF_Finalize(rc=localrc, endflag=ESMF_END_ABORT)

     call ESMF_TimeSet(stopTime, yy=2004, mm=9, dd=26, rc=localrc)
     if (ESMF_LogFoundError(localrc, ESMF_ERR_PASSTHRU, &
           ESMF_CONTEXT, rcToReturn=rc)) &
```

```
          call ESMF_Finalize(rc=localrc, endflag=ESMF_END_ABORT)

     clock = ESMF_ClockCreate(timeStep, startTime, stopTime=stopTime, &
               name="Application Clock", rc=localrc)
     if (ESMF_LogFoundError(localrc, ESMF_ERR_PASSTHRU, &
          ESMF_CONTEXT, rcToReturn=rc)) &
          call ESMF_Finalize(rc=localrc, endflag=ESMF_END_ABORT)

------------------------------------------------------------------------------
  Create and initialize a Grid.

  The default lower indices for the Grid are (/1,1/).
  The upper indices for the Grid are read in from the sample.rc file,
  where they are set to (/10,40/).  This means a Grid will be
  created with 10 grid cells in the x direction and 40 grid cells in the
  y direction.  The Grid section in the Reference Manual shows how to set
  coordinates.
------------------------------------------------------------------------------

     grid = ESMF_GridCreateNoPeriDim(maxIndex=(/i_max, j_max/), &
                             name="source grid", rc=localrc)
     if (ESMF_LogFoundError(localrc, ESMF_ERR_PASSTHRU, &
          ESMF_CONTEXT, rcToReturn=rc)) &
          call ESMF_Finalize(rc=localrc, endflag=ESMF_END_ABORT)

     ! Attach the grid to the Component
     call ESMF_GridCompSet(compGridded, grid=grid, rc=localrc)
     if (ESMF_LogFoundError(localrc, ESMF_ERR_PASSTHRU, &
          ESMF_CONTEXT, rcToReturn=rc)) &
          call ESMF_Finalize(rc=localrc, endflag=ESMF_END_ABORT)

------------------------------------------------------------------------------
  Create and initialize a State to use for both import and export.
  In a real code, separate import and export States would normally be
  created.
------------------------------------------------------------------------------

     defaultstate = ESMF_StateCreate(name="Default State", rc=localrc)
     if (ESMF_LogFoundError(localrc, ESMF_ERR_PASSTHRU, &
          ESMF_CONTEXT, rcToReturn=rc)) &
          call ESMF_Finalize(rc=localrc, endflag=ESMF_END_ABORT)

------------------------------------------------------------------------------
  Call the initialize, run, and finalize methods of the top component.
  When the initialize method of the top component is called, it will in
  turn call the initialize methods of all its child components, they
  will initialize their children, and so on.  The same is true of the
  run and finalize methods.
------------------------------------------------------------------------------

     call ESMF_GridCompInitialize(compGridded, importState=defaultstate, &
       exportState=defaultstate, clock=clock, rc=localrc)
     if (ESMF_LogFoundError(rc, msg="Initialize failed", rcToReturn=rc)) &
         call ESMF_Finalize(rc=localrc, endflag=ESMF_END_ABORT)
```

```
    call ESMF_GridCompRun(compGridded, importState=defaultstate, &
      exportState=defaultstate, clock=clock, rc=localrc)
    if (ESMF_LogFoundError(rc, msg="Run failed", rcToReturn=rc)) &
        call ESMF_Finalize(rc=localrc, endflag=ESMF_END_ABORT)

    call ESMF_GridCompFinalize(compGridded, importState=defaultstate, &
      exportState=defaultstate, clock=clock, rc=localrc)
    if (ESMF_LogFoundError(rc, msg="Finalize failed", rcToReturn=rc)) &
        call ESMF_Finalize(rc=localrc, endflag=ESMF_END_ABORT)


------------------------------------------------------------------------
  Destroy objects.
------------------------------------------------------------------------

    call ESMF_ClockDestroy(clock, rc=localrc)
    if (ESMF_LogFoundError(localrc, ESMF_ERR_PASSTHRU, &
      ESMF_CONTEXT, rcToReturn=rc)) &
      call ESMF_Finalize(rc=localrc, endflag=ESMF_END_ABORT)

    call ESMF_StateDestroy(defaultstate, rc=localrc)
    if (ESMF_LogFoundError(localrc, ESMF_ERR_PASSTHRU, &
      ESMF_CONTEXT, rcToReturn=rc)) &
      call ESMF_Finalize(rc=localrc, endflag=ESMF_END_ABORT)

    call ESMF_GridCompDestroy(compGridded, rc=localrc)
    if (ESMF_LogFoundError(localrc, ESMF_ERR_PASSTHRU, &
      ESMF_CONTEXT, rcToReturn=rc)) &
      call ESMF_Finalize(rc=localrc, endflag=ESMF_END_ABORT)

------------------------------------------------------------------------
  Finalize and clean up.
------------------------------------------------------------------------

   call ESMF_Finalize()

   end program ESMF_AppDriver
```

16.4 Required ESMF Methods

There are a few methods that every ESMF application must contain. First, `ESMF_Initialize()` and `ESMF_Finalize()` are in complete analogy to `MPI_Init()` and `MPI_Finalize()` known from MPI. All ESMF programs, serial or parallel, must initialize the ESMF system at the beginning, and finalize it at the end of execution. The behavior of calling any ESMF method before `ESMF_Initialize()`, or after `ESMF_Finalize()` is undefined.

Second, every ESMF Component that is accessed by an ESMF application requires that its set services routine is called through `ESMF_<Grid/Cpl>CompSetServices()`. The Component must implement one public entry point, its set services routine, that can be called through the `ESMF_<Grid/Cpl>CompSetServices()` library routine. The Component set services routine is responsible for setting entry points for the standard ESMF Component methods Initialize, Run, and Finalize.

Finally, the Component can optionally call `ESMF_<Grid/Cpl>CompSetVM()` *before* calling `ESMF_<Grid/Cpl>CompSetServices()`. Similar to `ESMF_<Grid/Cpl>CompSetServices()`, the `ESMF_<Grid/Cpl>CompSetVM()` call requires a public entry point into the Component. It allows the Component to adjust certain aspects of its execution environment, i.e. its own VM, before it is started up.

The following sections discuss the above mentioned aspects in more detail.

16.4.1 ESMF_Initialize - Initialize ESMF

INTERFACE:

```
subroutine ESMF_Initialize(configFilenameFromArgNum, &
  configFilename, configKey, &
  defaultDefaultCalKind, defaultCalKind, &
  defaultDefaultLogFilename, defaultLogFilename, &
  defaultLogAppendFlag, logAppendFlag, defaultLogKindFlag, logKindFlag, &
  mpiCommunicator,  ioUnitLBound, ioUnitUBound, &
  defaultGlobalResourceControl, globalResourceControl, config, hconfig, &
  vm, rc)
```

ARGUMENTS:

```
-- The following arguments require argument keyword syntax (e.g. rc=rc). --
      integer,                 intent(in),  optional :: configFilenameFromArgNum
      character(len=*),        intent(in),  optional :: configFilename
      character(len=*),        intent(in),  optional :: configKey(:)
      type(ESMF_CalKind_Flag), intent(in),  optional :: defaultDefaultCalKind
      type(ESMF_CalKind_Flag), intent(in),  optional :: defaultCalKind
      character(len=*),        intent(in),  optional :: defaultDefaultLogFilename
      character(len=*),        intent(in),  optional :: defaultLogFilename
      logical,                 intent(in),  optional :: defaultLogAppendFlag
      logical,                 intent(in),  optional :: logAppendFlag
      type(ESMF_LogKind_Flag), intent(in),  optional :: defaultLogKindFlag
      type(ESMF_LogKind_Flag), intent(in),  optional :: logKindFlag
      integer,                 intent(in),  optional :: mpiCommunicator
      integer,                 intent(in),  optional :: ioUnitLBound
      integer,                 intent(in),  optional :: ioUnitUBound
      logical,                 intent(in),  optional :: defaultGlobalResourceControl
      logical,                 intent(in),  optional :: globalResourceControl
      type(ESMF_Config),       intent(out), optional :: config
      type(ESMF_HConfig),      intent(out), optional :: hconfig
      type(ESMF_VM),           intent(out), optional :: vm
      integer,                 intent(out), optional :: rc
```

STATUS:

- This interface is backward compatible with ESMF versions starting at 5.2.0r. If code using this interface compiles with any version of ESMF starting with 5.2.0r, then it will compile with the current version.

- This interface was modified since ESMF version 5.2.0r. The fact that code using this interface compiles with the current ESMF version does not guarantee that it compiles with previous versions of this interface. If user code compatibility with version 5.2.0r is desired then care must be taken to limit the use of this interface to features that were available in the 5.2.0r release.
  Changes made after the 5.2.0r release:

  7.0.0 Added argument `logAppendFlag` to allow specifying that the existing log files will be overwritten.

  8.2.0 Added argument `globalResourceControl` to support ESMF-aware threading and resource control on the global VM level.
  Added argument `config` to return default handle to the defaultConfig.
  Renamed argument `defaultConfigFilename` to `configFilename`, in order to clarify that provided settings in the Config file are *not* defaults, but final overrides.
  Introduce `default` prefixed arguments: `defaultDefaultLogFilename`, `defaultLogAppendFlag`, `defaultLogKindFlag`, `defaultGlobalResourceControl`. These arguments allow specification of defaults for the associated settings. This default can be overridden via the associated argument, without the extra `default` prefix, either specified in the call, or within the specified Config file.

  8.5.0 Added argument `configKey` to support custom location of the map of predefined initialization options for YAML configurations.
  Added argument `configFilenameFromArgNum` to support config file specification via the command line.

  8.6.0 Added `defaultDefaultCalKind` argument to allow specifiation of a default for `defaultCalKind`.

  8.7.0 Added argument `hconfig` to simplify direct access to the default `ESMF_HConfig` object.

DESCRIPTION:

This method must be called once on each PET before any other ESMF methods are used. The method contains a barrier before returning, ensuring that all processes made it successfully through initialization.

Typically `ESMF_Initialize()` will call `MPI_Init()` internally unless MPI has been initialized by the user code before initializing the framework. If the MPI initialization is left to `ESMF_Initialize()` it inherits all of the MPI implementation dependent limitations of what may or may not be done before `MPI_Init()`. For instance, it is unsafe for some MPI implementations, such as MPICH1, to do I/O before the MPI environment is initialized. Please consult the documentation of your MPI implementation for details.

Note that when using MPICH1 as the MPI library, ESMF needs to use the application command line arguments for `MPI_Init()`. However, ESMF acquires these arguments internally and the user does not need to worry about providing them. Also, note that ESMF does not alter the command line arguments, so that if the user obtains them they will be as specified on the command line (including those which MPICH1 would normally strip out).

`ESMF_Initialize()` supports running ESMF inside a user MPI program. Details of this feature are discussed under the VM example 52.3.5. It is not necessary that all MPI ranks are handed to ESMF. Section 52.3.6 shows how an MPI communicator can be used to execute ESMF on a subset of MPI ranks. `ESMF_Initialize()` supports running multiple concurrent instances of ESMF under the same user MPI program. This feature is discussed under 52.3.7.

In order to use any of the advanced resource management functions that ESMF provides via the `ESMF_*CompSetVM*()` methods, the MPI environment must be thread-safe. `ESMF_Initialize()` handles this automatically if it is in charge of initializing MPI. However, if the user code initializes MPI before calling into `ESMF_Initialize()`, it must do so via `MPI_Init_thread()`, specifying `MPI_THREAD_SERIALIZED` or above for the required level of thread support.

In cases where `ESMF_*CompSetVM*()` methods are used to move processing elements (PEs), i.e. CPU cores, between persistent execution threads (PETs), ESMF uses POSIX signals between PETs. In order to do so safely, the proper signal handlers must be installed *before* MPI is initialized. `ESMF_Initialize()` handles this automatically

if it is in charge of initializing MPI. If, however, MPI is explicitly initialized by user code, then to ensure correct signal handling it is necessary to call `ESMF_InitializePreMPI()` from the user code prior to the MPI initialization.

By default, `ESMF_Initialize()` opens multiple error log files, one per processor. This is very useful for debugging purpose. However, when running the application on a large number of tasks, opening a large number of log files and writing log messages from all the tasks can become a performance bottleneck. Therefore, it is recommended for production runs to set `logKindFlag` to ESMF_LOGKIND_NONE, or `ESMF_LOGKIND_Multi_On_Error`. The latter only creates log files when an error occurs.

When integrating ESMF with applications where Fortran unit number conflicts exist, the optional `ioUnitLBound` and `ioUnitUBound` arguments may be used to specify an alternate unit number range. See section 54.2.1 for more information on how ESMF uses Fortran unit numbers.

Before exiting the application the user must call `ESMF_Finalize()` to release resources and clean up ESMF gracefully. See the `ESMF_Finalize()` documentation about details relating to the MPI environment.

The arguments are:

[configFilenameFromArgNum] Index of the command line argument specifying the config file name. If the specified command line argument does not exist, or `configFilenameFromArgNum` was not specified, the `configFilename` argument, if provided, is used by default.

[configFilename] Name of the configuration file for the entire application. If this argument is specified, the configuration file must exist. Its content is read during `ESMF_Initialize()`, and returned in optional argument `config` if present.

The traditional `ESMF_Config` format and the YAML format are supported. The latter is identified by file suffix `.yaml` and `.yml`, including all lower/upper case letter combinations that map to either suffix.

In the case of the traditional `ESMF_Config` format, the predefined labels of initialization options discussed below are expected on the top level of the configuration. The expected termination character for this case is a single colon following each label.

For the YAML case, the predefined initialization option labels are expected as the keys of a map. If the optional argument `configKey` is specified, it is used to locate this map. The map is expected as the terminal value of a succession of mappings:

```
configKey(1) :
  configKey(2) :
    ...
      configKey(size(configKey)) :
        {map of specified init options}
```

By default, in the absence of argument `configKey`, the top level itself is searched for a mapping of predefined labels, analogous to the traditional case.

If any of the following predefined labels are found in the specified configuration file (as per the above defined rules), their *values* are used to set the associated `ESMF_Initialize()` argument, overriding any defaults. If the same argument is also specified in the `ESMF_Initialize()` call directly, an error is returned, and ESMF is not initialized. The supported config labels are:

- `defaultCalKind`
- `defaultLogFilename`
- `logAppendFlag`
- `logKindFlag`
- `globalResourceControl`

ESMF allows the user to affect certain details about the execution of an application through a number of runtime environment variables. The following list of variables are checked within the specified configuration file. If a matching label is found, the respective value is set, potentially overriding the value defined within the user environment for the same variable.

- ESMF_RUNTIME_ABORT_ACTION
- ESMF_RUNTIME_ABORT_LOGMSG_TYPES
- ESMF_RUNTIME_COMPLIANCECHECK
- ESMF_RUNTIME_GARBAGE
- ESMF_RUNTIME_GARBAGE_LOG
- ESMF_RUNTIME_PROFILE
- ESMF_RUNTIME_PROFILE_OUTPUT
- ESMF_RUNTIME_PROFILE_PETLIST
- ESMF_RUNTIME_PROFILE_REGRID
- ESMF_RUNTIME_TRACE
- ESMF_RUNTIME_TRACE_CLOCK
- ESMF_RUNTIME_TRACE_FLUSH
- ESMF_RUNTIME_TRACE_COMPONENT
- ESMF_RUNTIME_TRACE_PETLIST

[configKey] If present, use configKey to find the map of predefined initialization options that are used during ESMF initialization. The default is to search the top level of the configuration for the labels directly. The configKey option is only supported for YAML configurations. An error is returned if configKey is specified for the traditional ESMF_Config case.

[defaultDefaultCalKind] Default value for argument defaultCalKind, the calendar used by ESMF Time Manger by default. If not specified, defaults to ESMF_CALKIND_NOCALENDAR.

[defaultCalKind] Sets the default calendar to be used by ESMF Time Manager. See section 43.2.1 for a list of valid options. If not specified, defaults according to defaultDefaultCalKind.

[defaultDefaultLogFilename] Default value for argument defaultLogFilename, the name of the default log file for warning and error messages. If not specified, the default is ESMF_LogFile.

[defaultLogFilename] Name of the default log file for warning and error messages. If not specified, defaults according to defaultDefaultLogFilename.

[defaultLogAppendFlag] Default value for argument logAppendFlag, indicating the overwrite behavior in case the default log file already exists. If not specified, the default is .true..

[logAppendFlag] If the default log file already exists, a value of .false. will set the file position to the beginning of the file. A value of .true. sets the position to the end of the file. If not specified, defaults according to defaultLogAppendFlag.

[defaultLogKindFlag] Default value for argument logKindFlag, setting the LogKind of the default ESMF log. If not specified, the default is ESMF_LOGKIND_MULTI.

[logKindFlag] Sets the LogKind of the default ESMF log. See section 50.2.2 for a list of valid options. If not specified, defaults according to defaultLogKindFlag.

[mpiCommunicator] MPI communicator defining the group of processes on which the ESMF application is running. See section 52.3.6 and 52.3.7 for details. If not specified, defaults to MPI_COMM_WORLD.

[ioUnitLBound] Lower bound for Fortran unit numbers used within the ESMF library. Fortran units are primarily used for log files. Legal unit numbers are positive integers. A value higher than 10 is recommended in order to avoid the compiler-specific reservations which are typically found on the first few units. If not specified, defaults to `ESMF_LOG_FORT_UNIT_NUMBER`, which is distributed with a value of 50.

[ioUnitUBound] Upper bound for Fortran unit numbers used within the ESMF library. Must be set to a value at least 5 units higher than `ioUnitLBound`. If not specified, defaults to `ESMF_LOG_UPPER`, which is distributed with a value of 99.

[defaultGlobalResourceControl] Default value for argument `globalResourceControl`, indicating whether PETs of the global VM are pinned to PEs and the OpenMP threading level is reset. If not specified, the default is `.false.`.

[globalResourceControl] For `.true.`, each global PET is pinned to the corresponding PE (i.e. CPU core) in order. Further, if OpenMP support is enabled for the ESMF installation (during build time), the `OMP_NUM_THREADS` is set to `1` on every PET, regardless of the setting in the launching environment. The `.true.` setting is recommended for applications that utilize the ESMF-aware threading and resource control features. For `.false.`, global PETs are *not* pinned by ESMF, and `OMP_NUM_THREADS` is *not* modified. If not specified, defaults according to `defaultGlobalResourceControl`.

[config] Returns the default `ESMF_Config` if the `configFilename` argument was provided. Otherwise the presence of this argument triggers an error.

[hconfig] Returns the default `ESMF_HConfig` if the `configFilename` argument was provided. Otherwise the presence of this argument triggers an error.

[vm] Returns the global `ESMF_VM` that was created during initialization.

[rc] Return code; equals `ESMF_SUCCESS` if there are no errors.

16.4.2 ESMF_InitializePreMPI - Initialize parts of ESMF that must happen before MPI is initialized

INTERFACE:

```
subroutine ESMF_InitializePreMPI(rc)
```

ARGUMENTS:

```
-- The following arguments require argument keyword syntax (e.g. rc=rc). --
   integer,                  intent(out), optional :: rc
```

DESCRIPTION:

This method is *only* needed for cases where MPI is initialized explicitly by user code. In most typical cases `ESMF_Initialize()` is called before MPI is initialized, and takes care of all the internal initialization, including MPI.

There are circumstances where it is necessary or convenient to initialize MPI before calling into `ESMF_Initialize()`. This option is supported by ESMF, and for most cases no special action is required on the user side. However, for cases where `ESMF_*CompSetVM*()` methods are used to move processing elements (PEs), i.e. CPU cores, between persistent execution threads (PETs), ESMF uses POSIX signals between PETs. In

order to do so safely, the proper signal handlers must be installed before MPI is initialized. This is accomplished by calling `ESMF_InitializePreMPI()` from the user code prior to the MPI initialization.

Note also that in order to use any of the advanced resource management functions that ESMF provides via the `ESMF_*CompSetVM*()` methods, the MPI environment must be thread-safe. `ESMF_Initialize()` handles this automatically if it is in charge of initializing MPI. However, if the user code initializes MPI before calling into `ESMF_Initialize()`, it must do so via `MPI_Init_thread()`, specifying `MPI_THREAD_SERIALIZED` or above for the required level of thread support.

The arguments are:

[rc] Return code; equals `ESMF_SUCCESS` if there are no errors.

16.4.3 ESMF_IsInitialized - Query Initialized status of ESMF

INTERFACE:

```
function ESMF_IsInitialized(rc)
```

RETURN VALUE:

```
logical :: ESMF_IsInitialized
```

ARGUMENTS:

```
-- The following arguments require argument keyword syntax (e.g. rc=rc). --
    integer,                 intent(out), optional :: rc
```

DESCRIPTION:

Returns `.true.` if the framework has been initialized. This means that `ESMF_Initialize()` has been called. Otherwise returns `.false.`. If an error occurs, i.e. `rc /= ESMF_SUCCESS` is returned, the return value of the function will also be `.false.`.

The arguments are:

[rc] Return code; equals `ESMF_SUCCESS` if there are no errors.

16.4.4 ESMF_IsFinalized - Query Finalized status of ESMF

INTERFACE:

```
function ESMF_IsFinalized(rc)
```

RETURN VALUE:

```
logical :: ESMF_IsFinalized
```

ARGUMENTS:

```
-- The following arguments require argument keyword syntax (e.g. rc=rc). --
    integer,                 intent(out), optional :: rc
```

DESCRIPTION:

Returns `.true.` if the framework has been finalized. This means that `ESMF_Finalize()` has been called. Otherwise returns `.false.`. If an error occurs, i.e. `rc /= ESMF_SUCCESS` is returned, the return value of the function will also be `.false.`.

The arguments are:

[rc] Return code; equals `ESMF_SUCCESS` if there are no errors.

16.4.5 ESMF_Finalize - Clean up and shut down ESMF

INTERFACE:

```
subroutine ESMF_Finalize(endflag, rc)
```

ARGUMENTS:

```
-- The following arguments require argument keyword syntax (e.g. rc=rc). --
    type(ESMF_End_Flag), intent(in), optional  :: endflag
    integer,             intent(out), optional :: rc
```

STATUS:

- This interface is backward compatible with ESMF versions starting at 5.2.0r. If code using this interface compiles with any version of ESMF starting with 5.2.0r, then it will compile with the current version.

DESCRIPTION:

This must be called once on each PET before the application exits to allow ESMF to flush buffers, close open connections, and release internal resources cleanly. The optional argument `endflag` may be used to indicate the mode of termination. Note that this call must be issued only once per PET with `endflag=ESMF_END_NORMAL`, and that this call may not be followed by `ESMF_Initialize()`. This last restriction means that it is not possible to restart ESMF within the same execution.

The arguments are:

[endflag] Specify mode of termination. The default is `ESMF_END_NORMAL` which waits for all PETs of the global VM to reach `ESMF_Finalize()` before termination. See section 16.2.1 for a complete list and description of valid flags.

[rc] Return code; equals `ESMF_SUCCESS` if there are no errors.

16.4.6 User-code `SetServices` method

Many programs call some library routines. The library documentation must explain what the routine name is, what arguments are required and what are optional, and what the code does.

In contrast, all ESMF components must be written to *be called* by another part of the program; in effect, an ESMF component takes the place of a library. The interface is prescribed by the framework, and the component writer must provide specific subroutines which have standard argument lists and perform specific operations. For technical reasons *none* of the arguments in user-provided subroutines must be declared as *optional*.

The only *required* public interface of a Component is its SetServices method. This subroutine must have an externally accessible name (be a public symbol), take a component as the first argument, and an integer return code as the second. Both arguments are required and must *not* be declared as `optional`. If an intent is specified in the interface it must be `intent(inout)` for the first and `intent(out)` for the second argument. The subroutine name is not predefined, it is set by the component writer, but must be provided as part of the component documentation.

The required function that the SetServices subroutine must provide is to specify the user-code entry points for the standard ESMF Component methods. To this end the user-written SetServices routine calls the

`ESMF_<Grid/Cpl>CompSetEntryPoint()` method to set each Component entry point.

See sections 17.2.1 and 18.2.1 for examples of how to write a user-code SetServices routine.

Note that a component does not call its own SetServices routine; the AppDriver or parent component code, which is creating a component, will first call `ESMF_<Grid/Cpl>CompCreate()` to create a component object, and then must call into `ESMF_<Grid/Cpl>CompSetServices()`, supplying the user-code SetServices routine as an argument. The framework then calls into the user-code SetServices, after the Component's VM has been started up.

It is good practice to package the user-code implementing a component into a Fortran module, with the user-code SetService routine being the only public module method. ESMF supports three mechanisms for accessing the user-code SetServices routine from the calling AppDriver or parent component.

- **Fortran USE association**: The AppDriver or parent component utilizes the standard Fortran USE statement on the component module to make all public entities available. The user-code SetServices routine can then be passed directly into the `ESMF_<Grid/Cpl>CompSetServices()` interface documented in 17.4.19 and 18.4.19, respectively.

  Pros: Standard Fortran module use: name mangling and interface checking is handled by the Fortran compiler.

  Cons: Fortran 90/95 has no mechanism to implement a "smart" dependency scheme through USE association. Any change in a lower level component module (even just adding or changing a comment!) will trigger a complete recompilation of all of the higher level components throughout the component hierarchy. This situation is particularly annoying for ESMF componentized code, where the prescribed ESMF component interfaces, in principle, remove all interdependencies between components that would require recompilation.

  Fortran *submodules*, introduced as an extension to Fortran 2003, and now part for the Fortran 2008 standard, are designed to avoid this "false" dependency issue. A code change to an ESMF component that keeps the actual implementation within a submodule, will not trigger a recompilation of the components further up in the component hierarchy. Unfortunately, as of mid-2015, only two compiler vendors support submodules.

- **External routine**: The AppDriver or parent component provides an explicit interface block for an external routine that implements (or calls) the user-code SetServices routine. This routine can then be passed directly into the `ESMF_<Grid/Cpl>CompSetServices()` interface documented in 17.4.19 and 18.4.19, respectively. (In practice this can be implemented by the component as an external subroutine that simply calls into the user-code SetServices module routine.)

  Pros: Avoids Fortran USE dependencies: a change to lower level component code will not trigger a complete recompilation of all of the higher level components throughout the component hierarchy. Name mangling is handled by the Fortran compiler.

  Cons: The user-code SetServices interface is not checked by the compiler. The user must ensure uniqueness of the external routine name across the entire application.

- **Name lookup**: The AppDriver or parent component specifies the user-code SetServices routine by name. The actual lookup and code association does not occur until runtime. The name string is passed into the `ESMF_<Grid/Cpl>CompSetServices()` interface documented in 17.4.20 and 18.4.20, respectively.

  Pros: Avoids Fortran USE dependencies: a change to lower level component code will not trigger a complete recompilation of all of the higher level components throughout the component hierarchy. The component code does not have to be accessible until runtime and may be located in a shared object, thus avoiding relinking of the application.

  Cons: The user-code SetServices interface is not checked by the compiler. The user must explicitly deal with all of the Fortran name mangling issues: 1) Accessing a module routine requires precise knowledge of the name mangling rules of the specific compiler. Alternatively, the user-code SetServices routine may be implemented as an external routine, avoiding the module name mangling. 2) Even then, Fortran compilers typically append one or two underscores on a symbol name. This must be considered when passing the name into the `ESMF_<Grid/Cpl>CompSetServices()` method.

16.4.7 User-code `Initialize`, `Run`, and `Finalize` methods

The required standard ESMF Component methods, for which user-code entry points must be set, are Initialize, Run, and Finalize. Currently optional, a Component may also set entry points for the WriteRestart and ReadRestart methods.

Sections 17.2.1 and 18.2.1 provide examples of how the entry points for Initialize, Run, and Finalize are set during the user-code SetServices routine, using the `ESMF_<Grid/Cpl>CompSetEntryPoint()` library call.

All standard user-code methods must abide *exactly* to the prescribed interfaces. *None* of the arguments must be declared as *optional*.

The names of the Initialize, Run, and Finalize user-code subroutines do not need to be public; in fact it is far better for them to be private to lower the chances of public symbol clashes between different components.

See sections 17.2.2, 17.2.3, 17.2.4, and 18.2.2, 18.2.3, 18.2.4 for examples of how to write entry points for the standard ESMF Component methods.

16.4.8 User-code `SetVM` method

When the AppDriver or parent component code calls `ESMF_<Grid/Cpl>CompCreate()` it has the option to specify a `petList` argument. All of the parent PETs contained in this list become resources of the child component. By default, without the `petList` argument, all of the parent PETs are provided to the child component.

Typically each component has its own virtual machine (VM) object. However, using the optional `contextflag` argument during `ESMF_<Grid/Cpl>CompCreate()` a child component can inherit its parent component's VM.

Unless a child component inherits the parent VM, it has the option to set certain aspects of how its VM utilizes the provided resources. The resources provided via the parent PETs are the associated processing elements (PEs) and virtual address spaces (VASs).

The optional user-written SetVM routine is called from the parent for the child through the `ESMF_<Grid/Cpl>CompSetVM()` method. This is the only place where the child component can set aspects of its own VM before it is started up. The child component's VM must be running before the SetServices routine can be called, and thus the parent must call the optional `ESMF_<Grid/Cpl>CompSetVM()` method *before* `ESMF_<Grid/Cpl>CompSetServices()`.

Inside the user-code called by the SetVM routine, the component has the option to specify how the PETs share the provided parent PEs. Further, PETs on the same single system image (SSI) can be set to run multi-threaded within a reduced number of virtual address spaces (VAS), allowing a component to leverage shared memory concepts.

Sections 17.2.5 and 18.2.5 provide examples for simple user-written SetVM routines.

One common use of the SetVM approach is to implement hybrid parallelism based on MPI+OpenMP. Under ESMF, each component can use its own hybrid parallelism implementation. Different components, even if running on the same PE resources, do not have to agree on the number of MPI processes (i.e. PETs), or the number of OpenMP threads launched under each PET. Hybrid and non-hybrid components can be mixed within the same application. Coupling between components of any flavor is supported under ESMF.

In order to obtain best performance when using SetVM based resource control for hybrid parallelism, it is *strongly recommended* to set `OMP_WAIT_POLICY=PASSIVE` in the environment. This is one of the standard OpenMP environment variables. The `PASSIVE` setting ensures that OpenMP threads relinquish the PEs as soon as they have completed their work. Without that setting ESMF resource control threads can be delayed, and context switching between components becomes more expensive.

16.4.9 Use of `internal procedures` as user-provided procedures

Internal procedures are nested within a surrounding procedure, and only local to the surrounding procedure. They are specified by using the CONTAINS statement.

Prior to Fortran-2008 an internal procedure could not be used as a user-provided callback procedure. In Fortran-2008 this restriction was lifted. It is important to note that if ESMF is passed an internal procedure, that the surrounding procedure be active whenever ESMF calls it. This helps ensure that local variables at the surrounding procedures scope are properly initialized.

When internal procedures contained within a main program unit are used for callbacks, there is no problem. This is because the main program unit is always active. However when internal procedures are used within other program units, initialization could become a problem. The following outlines the issue:

```
module my_procs_mod
  use ESMF
  implicit none

contains

  subroutine my_procs (...)
    integer :: my_setting
    :
    call ESMF_GridCompSetEntryPoint(gridcomp, methodflag=ESMF_METHOD_INITIALIZE, &
        userRoutine=my_grid_proc_init, rc=localrc)
```

```
      :
      my_setting = 42

    contains

      subroutine my_grid_proc_init (gridcomp, importState, exportState, clock, rc)
        :
      ! my_setting is possibly uninitialized when my_grid_proc_init is used as a call-back
        something = my_setting
        :
      end subroutine my_grid_proc_init
    end subroutine my_procs
  end module my_procs_mod
```

The Fortran standard does not specify whether variable *my_setting* is statically or automatically allocated, unless it is explicitly given the SAVE attribute. Thus there is no guarantee that its value will persist after *my_procs* has finished. The SAVE attribute is usually given to a variable via specifying a SAVE attribute in its delaration. However it can also be inferred by initializing the variable in its declaration:

```
      :
      integer, save : my_setting
      :
```

or,

```
      :
      integer :: my_setting = 42
      :
```

Because of the potential initialization issues, it is recommended that internal procedures only be used as ESMF call-backs when the surrounding procedure is also active.

17 GridComp Class

17.1 Description

In Earth system modeling, the most natural way to think about an ESMF Gridded Component, or `ESMF_GridComp`, is as a piece of code representing a particular physical domain, such as an atmospheric model or an ocean model. Gridded Components may also represent individual processes, such as radiation or chemistry. It's up to the application writer to decide how deeply to "componentize."

Earth system software components tend to share a number of basic features. Most ingest and produce a variety of physical fields, refer to a (possibly noncontiguous) spatial region and a grid that is partitioned across a set of computational resources, and require a clock for things like stepping a governing set of PDEs forward in time. Most can also be divided into distinct initialize, run, and finalize computational phases. These common characteristics are used within ESMF to define a Gridded Component data structure that is tailored for Earth system modeling and yet is still flexible enough to represent a variety of domains.

A well designed Gridded Component does not store information internally about how it couples to other Gridded Components. That allows it to be used in different contexts without changes to source code. The idea here is to avoid situations in which slightly different versions of the same model source are maintained for use in different contexts - standalone vs. coupled versions, for example. Data is passed in and out of Gridded Components using an ESMF State, this is described in Section 21.1.

An ESMF Gridded Component has two parts, one which is user-written and another which is part of the framework. The user-written part is software that represents a physical domain or performs some other computational function. It forms the body of the Gridded Component. It may be a piece of legacy code, or it may be developed expressly for use with ESMF. It must contain routines with standard ESMF interfaces that can be called to initialize, run, and finalize the Gridded Component. These routines can have separate callable phases, such as distinct first and second initialization steps.

ESMF provides the Gridded Component derived type, `ESMF_GridComp`. An `ESMF_GridComp` must be created for every portion of the application that will be represented as a separate component. For example, in a climate model, there may be Gridded Components representing the land, ocean, sea ice, and atmosphere. If the application contains an ensemble of identical Gridded Components, every one has its own associated `ESMF_GridComp`. Each Gridded Component has its own name and is allocated a set of computational resources, in the form of an ESMF Virtual Machine, or `VM`.

The user-written part of a Gridded Component is associated with an `ESMF_GridComp` derived type through a routine called `ESMF_SetServices()`. This is a routine that the user must write, and declare public. Inside the SetServices routine the user must call `ESMF_SetEntryPoint()` methods that associate a standard ESMF operation with the name of the corresponding Fortran subroutine in their user code.

17.2 Use and Examples

A Gridded Component is a computational entity which consumes and produces data. It uses a State object to exchange data between itself and other Components. It uses a Clock object to manage time, and a VM to describe its own and its child components' computational resources.

This section shows how to create Gridded Components. For demonstrations of the use of Gridded Components, see the system tests that are bundled with the ESMF software distribution. These can be found in the directory `esmf/src/system_tests`.

17.2.1 Implement a user-code `SetServices` routine

Every `ESMF_GridComp` is required to provide and document a public set services routine. It can have any name, but must follow the declaration below: a subroutine which takes an `ESMF_GridComp` as the first argument, and an integer return code as the second. Both arguments are required and must *not* be declared as `optional`. If an intent is specified in the interface it must be `intent(inout)` for the first and `intent(out)` for the second argument.

The set services routine must call the ESMF method `ESMF_GridCompSetEntryPoint()` to register with the framework what user-code subroutines should be called to initialize, run, and finalize the component. There are additional routines which can be registered as well, for checkpoint and restart functions.

Note that the actual subroutines being registered do not have to be public to this module; only the set services routine itself must be available to be used by other code.

```
! Example Gridded Component
module ESMF_GriddedCompEx
```

```
! ESMF Framework module
use ESMF
implicit none
public GComp_SetServices
public GComp_SetVM

contains

subroutine GComp_SetServices(comp, rc)
  type(ESMF_GridComp)   :: comp   ! must not be optional
  integer, intent(out)  :: rc     ! must not be optional

  ! Set the entry points for standard ESMF Component methods
  call ESMF_GridCompSetEntryPoint(comp, ESMF_METHOD_INITIALIZE, &
                          userRoutine=GComp_Init, rc=rc)
  call ESMF_GridCompSetEntryPoint(comp, ESMF_METHOD_RUN, &
                          userRoutine=GComp_Run, rc=rc)
  call ESMF_GridCompSetEntryPoint(comp, ESMF_METHOD_FINALIZE, &
                          userRoutine=GComp_Final, rc=rc)

  rc = ESMF_SUCCESS

end subroutine
```

17.2.2 Implement a user-code `Initialize` routine

When a higher level component is ready to begin using an `ESMF_GridComp`, it will call its initialize routine.

The component writer must supply a subroutine with the exact interface shown below. Arguments must not be declared as optional, and the types and order must match.

At initialization time the component can allocate data space, open data files, set up initial conditions; anything it needs to do to prepare to run.

The `rc` return code should be set if an error occurs, otherwise the value `ESMF_SUCCESS` should be returned.

```
subroutine GComp_Init(comp, importState, exportState, clock, rc)
  type(ESMF_GridComp)   :: comp                  ! must not be optional
  type(ESMF_State)      :: importState           ! must not be optional
  type(ESMF_State)      :: exportState           ! must not be optional
  type(ESMF_Clock)      :: clock                 ! must not be optional
  integer, intent(out)  :: rc                    ! must not be optional

  print *, "Gridded Comp Init starting"

  ! This is where the model specific setup code goes.

  ! If the initial Export state needs to be filled, do it here.
  !call ESMF_StateAdd(exportState, field, rc)
  !call ESMF_StateAdd(exportState, bundle, rc)
  print *, "Gridded Comp Init returning"

  rc = ESMF_SUCCESS
```

```
end subroutine GComp_Init
```

17.2.3 Implement a user-code `Run` routine

During the execution loop, the run routine may be called many times. Each time it should read data from the `importState`, use the `clock` to determine what the current time is in the calling component, compute new values or process the data, and produce any output and place it in the `exportState`.

When a higher level component is ready to use the `ESMF_GridComp` it will call its run routine.

The component writer must supply a subroutine with the exact interface shown below. Arguments must not be declared as optional, and the types and order must match.

It is expected that this is where the bulk of the model computation or data analysis will occur.

The `rc` return code should be set if an error occurs, otherwise the value `ESMF_SUCCESS` should be returned.

```
subroutine GComp_Run(comp, importState, exportState, clock, rc)
  type(ESMF_GridComp)   :: comp                  ! must not be optional
  type(ESMF_State)      :: importState           ! must not be optional
  type(ESMF_State)      :: exportState           ! must not be optional
  type(ESMF_Clock)      :: clock                 ! must not be optional
  integer, intent(out)  :: rc                    ! must not be optional

  print *, "Gridded Comp Run starting"
  ! call ESMF_StateGet(), etc to get fields, bundles, arrays
  !  from import state.

  ! This is where the model specific computation goes.

  ! Fill export state here using ESMF_StateAdd(), etc

  print *, "Gridded Comp Run returning"

  rc = ESMF_SUCCESS

end subroutine GComp_Run
```

17.2.4 Implement a user-code `Finalize` routine

At the end of application execution, each `ESMF_GridComp` should deallocate data space, close open files, and flush final results. These functions should be placed in a finalize routine.

The component writer must supply a subroutine with the exact interface shown below. Arguments must not be declared as optional, and the types and order must match.

The `rc` return code should be set if an error occurs, otherwise the value `ESMF_SUCCESS` should be returned.

```
subroutine GComp_Final(comp, importState, exportState, clock, rc)
```

```
  type(ESMF_GridComp)   :: comp                   ! must not be optional
  type(ESMF_State)      :: importState            ! must not be optional
  type(ESMF_State)      :: exportState            ! must not be optional
  type(ESMF_Clock)      :: clock                  ! must not be optional
  integer, intent(out)  :: rc                     ! must not be optional

  print *, "Gridded Comp Final starting"

  ! Add whatever code here needed

  print *, "Gridded Comp Final returning"

  rc = ESMF_SUCCESS

end subroutine GComp_Final
```

17.2.5 Implement a user-code `SetVM` routine

Every `ESMF_GridComp` can optionally provide and document a public set vm routine. It can have any name, but must follow the declaration below: a subroutine which takes an `ESMF_GridComp` as the first argument, and an integer return code as the second. Both arguments are required and must *not* be declared as `optional`. If an intent is specified in the interface it must be `intent(inout)` for the first and `intent(out)` for the second argument.

The set vm routine is the only place where the child component can use the `ESMF_GridCompSetVMMaxPEs()`, or `ESMF_GridCompSetVMMaxThreads()`, or `ESMF_GridCompSetVMMinThreads()` call to modify aspects of its own VM.

A component's VM is started up right before its set services routine is entered. `ESMF_GridCompSetVM()` is executing in the parent VM, and must be called *before* `ESMF_GridCompSetServices()`.

```
subroutine GComp_SetVM(comp, rc)
  type(ESMF_GridComp)   :: comp   ! must not be optional
  integer, intent(out)  :: rc     ! must not be optional

  type(ESMF_VM) :: vm
  logical :: pthreadsEnabled

  ! Test for Pthread support, all SetVM calls require it
  call ESMF_VMGetGlobal(vm, rc=rc)
  call ESMF_VMGet(vm, pthreadsEnabledFlag=pthreadsEnabled, rc=rc)

  if (pthreadsEnabled) then
    ! run PETs single-threaded
    call ESMF_GridCompSetVMMinThreads(comp, rc=rc)
  endif

  rc = ESMF_SUCCESS

end subroutine

end module ESMF_GriddedCompEx
```

17.3 Restrictions and Future Work

1. **No optional arguments.** User-written routines called by SetServices, and registered for Initialize, Run and Finalize, *must not* declare any of the arguments as optional.
2. **Namespace isolation.** If possible, Gridded Components should attempt to make all data private, so public names do not interfere with data in other components.
3. **Single execution mode.** It is not expected that a single Gridded Component be able to function in both sequential and concurrent modes, although Gridded Components of different types can be nested. For example, a concurrently called Gridded Component can contain several nested sequential Gridded Components.

17.4 Class API

17.4.1 ESMF_GridCompAssignment(=) - GridComp assignment

INTERFACE:

```
interface assignment(=)
gridcomp1 = gridcomp2
```

ARGUMENTS:

```
type(ESMF_GridComp) :: gridcomp1
type(ESMF_GridComp) :: gridcomp2
```

STATUS:

- This interface is backward compatible with ESMF versions starting at 5.2.0r. If code using this interface compiles with any version of ESMF starting with 5.2.0r, then it will compile with the current version.

DESCRIPTION:

Assign gridcomp1 as an alias to the same ESMF GridComp object in memory as gridcomp2. If gridcomp2 is invalid, then gridcomp1 will be equally invalid after the assignment.

The arguments are:

gridcomp1 The `ESMF_GridComp` object on the left hand side of the assignment.

gridcomp2 The `ESMF_GridComp` object on the right hand side of the assignment.

17.4.2 ESMF_GridCompOperator(==) - GridComp equality operator

INTERFACE:

```
interface operator(==)
  if (gridcomp1 == gridcomp2) then ... endif
            OR
  result = (gridcomp1 == gridcomp2)
```

RETURN VALUE:

```
logical :: result
```

ARGUMENTS:

```
type(ESMF_GridComp), intent(in) :: gridcomp1
type(ESMF_GridComp), intent(in) :: gridcomp2
```

STATUS:

- This interface is backward compatible with ESMF versions starting at 5.2.0r. If code using this interface compiles with any version of ESMF starting with 5.2.0r, then it will compile with the current version.

DESCRIPTION:

Test whether gridcomp1 and gridcomp2 are valid aliases to the same ESMF GridComp object in memory. For a more general comparison of two ESMF GridComps, going beyond the simple alias test, the ESMF_GridCompMatch() function (not yet implemented) must be used.

The arguments are:

gridcomp1 The `ESMF_GridComp` object on the left hand side of the equality operation.

gridcomp2 The `ESMF_GridComp` object on the right hand side of the equality operation.

17.4.3 ESMF_GridCompOperator(/=) - GridComp not equal operator

INTERFACE:

```
interface operator(/=)
  if (gridcomp1 /= gridcomp2) then ... endif
            OR
  result = (gridcomp1 /= gridcomp2)
```

RETURN VALUE:

```
logical :: result
```

ARGUMENTS:

```
type(ESMF_GridComp), intent(in) :: gridcomp1
type(ESMF_GridComp), intent(in) :: gridcomp2
```

STATUS:

- This interface is backward compatible with ESMF versions starting at 5.2.0r. If code using this interface compiles with any version of ESMF starting with 5.2.0r, then it will compile with the current version.

DESCRIPTION:

Test whether gridcomp1 and gridcomp2 are *not* valid aliases to the same ESMF GridComp object in memory. For a more general comparison of two ESMF GridComps, going beyond the simple alias test, the ESMF_GridCompMatch() function (not yet implemented) must be used.

The arguments are:

gridcomp1 The `ESMF_GridComp` object on the left hand side of the non-equality operation.

gridcomp2 The `ESMF_GridComp` object on the right hand side of the non-equality operation.

17.4.4 ESMF_GridCompCreate - Create a GridComp

INTERFACE:

```
recursive function ESMF_GridCompCreate(grid, gridList, &
  mesh, meshList, locstream, locstreamList, xgrid, xgridList, &
  hconfig, config, configFile, clock, petList, devList, contextflag, name, rc)
```

RETURN VALUE:

```
type(ESMF_GridComp) :: ESMF_GridCompCreate
```

ARGUMENTS:

```
-- The following arguments require argument keyword syntax (e.g. rc=rc). --
    type(ESMF_Grid),         intent(in),    optional :: grid
    type(ESMF_Grid),         intent(in),    optional :: gridList(:)
    type(ESMF_Mesh),         intent(in),    optional :: mesh
    type(ESMF_Mesh),         intent(in),    optional :: meshList(:)
    type(ESMF_LocStream),    intent(in),    optional :: locstream
    type(ESMF_LocStream),    intent(in),    optional :: locstreamList(:)
    type(ESMF_XGrid),        intent(in),    optional :: xgrid
    type(ESMF_XGrid),        intent(in),    optional :: xgridList(:)
    type(ESMF_HConfig),      intent(in),    optional :: hconfig
    type(ESMF_Config),       intent(in),    optional :: config
    character(len=*),        intent(in),    optional :: configFile
    type(ESMF_Clock),        intent(in),    optional :: clock
    integer,                 intent(in),    optional :: petList(:)
    integer,                 intent(in),    optional :: devList(:)
    type(ESMF_Context_Flag), intent(in),    optional :: contextflag
    character(len=*),        intent(in),    optional :: name
    integer,                 intent(out),   optional :: rc
```

STATUS:

- This interface is backward compatible with ESMF versions starting at 5.2.0r. If code using this interface compiles with any version of ESMF starting with 5.2.0r, then it will compile with the current version.
- This interface was modified since ESMF version 5.2.0r. The fact that code using this interface compiles with the current ESMF version does not guarantee that it compiles with previous versions of this interface. If user code compatibility with version 5.2.0r is desired then care must be taken to limit the use of this interface to features that were available in the 5.2.0r release.
  Changes made after the 5.2.0r release:

  7.1.0r Added arguments `gridList`, `mesh`, `meshList`, `locstream`, `locstreamList`, `xgrid`, and `xgridList`. These arguments add support for holding references to multiple geom objects, either of the same type, or different type, in the same `ESMF_GridComp` object.

  8.6.0 Added argument `devList` to support management of accelerator devices.

  8.7.0 Added argument `hconfig` to simplify direct usage of `ESMF_HConfig` objects with Components.

DESCRIPTION:

This interface creates an `ESMF_GridComp` object. By default, a separate VM context will be created for each component. This implies creating a new MPI communicator and allocating additional memory to manage the VM resources. When running on a large number of processors, creating a separate VM for each component could be both time and memory inefficient. If the application is sequential, i.e., each component is running on all the PETs of the global VM, it will be more efficient to use the global VM instead of creating a new one. This can be done by setting `contextflag` to ESMF_CONTEXT_PARENT_VM.

The return value is the new `ESMF_GridComp`.

The arguments are:

[grid] Associate an `ESMF_Grid` object with the newly created component. This is simply a convenience feature for the user. The ESMF library code does not access the `grid` object. The `grid` argument is mutually exclusive with the `gridList` argument. If both arguments are provided, the routine will fail, and an error is returned in `rc`. By default, i.e. if neither `grid` nor `gridList` are provided, no `ESMF_Grid` objects are associated with the component.

[gridList] Associate a list of `ESMF_Grid` objects with the newly created component. This is simply a convenience feature for the user. The ESMF library code does not access the `gridList` object. The `gridList` argument is mutually exclusive with the `grid` argument. If both arguments are provided, the routine will fail, and an error is returned in `rc`. By default, i.e. if neither `grid` nor `gridList` are provided, no `ESMF_Grid` objects are associated with the component.

[mesh] Associate an `ESMF_Mesh` object with the newly created component. This is simply a convenience feature for the user. The ESMF library code does not access the `mesh` object. The `mesh` argument is mutually exclusive with the `meshList` argument. If both arguments are provided, the routine will fail, and an error is returned in `rc`. By default, i.e. if neither `mesh` nor `meshList` are provided, no `ESMF_Mesh` objects are associated with the component.

[meshList] Associate a list of `ESMF_Mesh` objects with the newly created component. This is simply a convenience feature for the user. The ESMF library code does not access the `meshList` object. The `meshList` argument is mutually exclusive with the `mesh` argument. If both arguments are provided, the routine will fail, and an error is returned in `rc`. By default, i.e. if neither `mesh` nor `meshList` are provided, no `ESMF_Mesh` objects are associated with the component.

[locstream] Associate an `ESMF_LocStream` object with the newly created component. This is simply a convenience feature for the user. The ESMF library code does not access the `locstream` object. The `locstream`

argument is mutually exclusive with the `locstreamList` argument. If both arguments are provided, the routine will fail, and an error is returned in `rc`. By default, i.e. if neither `locstream` nor `locstreamList` are provided, no `ESMF_LocStream` objects are associated with the component.

[locstreamList] Associate a list of `ESMF_LocStream` objects with the newly created component. This is simply a convenience feature for the user. The ESMF library code does not access the `locstreamList` object. The `locstreamList` argument is mutually exclusive with the `locstream` argument. If both arguments are provided, the routine will fail, and an error is returned in `rc`. By default, i.e. if neither `locstream` nor `locstreamList` are provided, no `ESMF_LocStream` objects are associated with the component.

[xgrid] Associate an `ESMF_XGrid` object with the newly created component. This is simply a convenience feature for the user. The ESMF library code does not access the `xgrid` object. The `xgrid` argument is mutually exclusive with the `xgridList` argument. If both arguments are provided, the routine will fail, and an error is returned in `rc`. By default, i.e. if neither `xgrid` nor `xgridList` are provided, no `ESMF_XGrid` objects are associated with the component.

[xgridList] Associate a list of `ESMF_XGrid` objects with the newly created component. This is simply a convenience feature for the user. The ESMF library code does not access the `xgridList` object. The `xgridList` argument is mutually exclusive with the `xgrid` argument. If both arguments are provided, the routine will fail, and an error is returned in `rc`. By default, i.e. if neither `xgrid` nor `xgridList` are provided, no `ESMF_XGrid` objects are associated with the component.

[hconfig] An already-created `ESMF_HConfig` object to be attached to the newly created component. Only one of `hconfig`, `config`, or `configFile` must be specified.

[config] An already-created `ESMF_Config` object to be attached to the newly created component. Only one of `hconfig`, `config`, or `configFile` must be specified.

[configFile] The filename of a config file. If specified, a new `ESMF_Config` object is created and attached to the newly created component. The `configFile` file is opened and associated with the new config object. Only one of `hconfig`, `config`, or `configFile` must be specified.

[clock] The `ESMF_Clock` object associated with the component. Often this will be a component specific clock that can be queried and updated by the component freely. In that case it should be a clock object separate from that of other components, particularily that of the parent component. However, ESMF itself does not access or update `clock` and therefore does not impose any direct restrictions. It is the user's responsibility to ensure correct usage of the `clock` object by the parent and child components.

[petList] List of parent `PET`s given to the created child component by the parent component. If `petList` is not specified, or is empty, all of the parent `PET`s are given to the child component. The order of PETs in `petList` determines how the child local PETs map back to the parent PETs.

[devList] List of accelerator devices global ids `DEV`s to be associated with the created child component. If `devList` is not specified, or is empty, no devices are associated with the component.

[contextflag] Specify the component's VM context. The default context is `ESMF_CONTEXT_OWN_VM`. See section 55.10 for a complete list of valid flags.

[name] Name of the newly-created `ESMF_GridComp`. This name can be altered from within the `ESMF_GridComp` code once the initialization routine is called.

[rc] Return code; equals `ESMF_SUCCESS` if there are no errors.

17.4.5 ESMF_GridCompDestroy - Release resources associated with a GridComp

INTERFACE:

```
recursive subroutine ESMF_GridCompDestroy(gridcomp, &
  timeout, timeoutFlag, rc)
```

ARGUMENTS:

```
    type(ESMF_GridComp), intent(inout)          :: gridcomp
 -- The following arguments require argument keyword syntax (e.g. rc=rc). --
    integer,             intent(in),   optional :: timeout
    logical,             intent(out),  optional :: timeoutFlag
    integer,             intent(out),  optional :: rc
```

STATUS:

- This interface is backward compatible with ESMF versions starting at 5.2.0r. If code using this interface compiles with any version of ESMF starting with 5.2.0r, then it will compile with the current version.
- This interface was modified since ESMF version 5.2.0r. The fact that code using this interface compiles with the current ESMF version does not guarantee that it compiles with previous versions of this interface. If user code compatibility with version 5.2.0r is desired then care must be taken to limit the use of this interface to features that were available in the 5.2.0r release.
  Changes made after the 5.2.0r release:

  5.3.0 Added argument `timeout`. Added argument `timeoutFlag`. The new arguments provide access to the fault-tolerant component features.

DESCRIPTION:

Destroys an `ESMF_GridComp`, releasing the resources associated with the object.

The arguments are:

gridcomp Release all resources associated with this `ESMF_GridComp` and mark the object as invalid. It is an error to pass this object into any other routines after being destroyed.

[timeout] The maximum period in seconds that this call will wait in communications with the actual component, before returning with a timeout condition. The default is 3600, i.e. 1 hour. The `timeout` argument is only supported for connected dual components.

[timeoutFlag] Returns `.true.` if the timeout was reached, `.false.` otherwise. If `timeoutFlag` was *not* provided, a timeout condition will lead to a return code of `rc \= ESMF_SUCCESS`. Otherwise the return value of `timeoutFlag` is the sole indicator of a timeout condition.

[rc] Return code; equals `ESMF_SUCCESS` if there are no errors.

17.4.6 ESMF_GridCompFinalize - Call the GridComp's finalize routine

INTERFACE:

```
recursive subroutine ESMF_GridCompFinalize(gridcomp, &
  importState, exportState, clock, syncflag, phase, timeout, timeoutFlag, &
  userRc, rc)
```

ARGUMENTS:

```
    type(ESMF_GridComp),  intent(inout)           :: gridcomp
-- The following arguments require argument keyword syntax (e.g. rc=rc). --
    type(ESMF_State),     intent(inout), optional :: importState
    type(ESMF_State),     intent(inout), optional :: exportState
    type(ESMF_Clock),     intent(inout), optional :: clock
    type(ESMF_Sync_Flag), intent(in),    optional :: syncflag
    integer,              intent(in),    optional :: phase
    integer,              intent(in),    optional :: timeout
    logical,              intent(out),   optional :: timeoutFlag
    integer,              intent(out),   optional :: userRc
    integer,              intent(out),   optional :: rc
```

STATUS:

- This interface is backward compatible with ESMF versions starting at 5.2.0r. If code using this interface compiles with any version of ESMF starting with 5.2.0r, then it will compile with the current version.
- This interface was modified since ESMF version 5.2.0r. The fact that code using this interface compiles with the current ESMF version does not guarantee that it compiles with previous versions of this interface. If user code compatibility with version 5.2.0r is desired then care must be taken to limit the use of this interface to features that were available in the 5.2.0r release.
  Changes made after the 5.2.0r release:

  5.3.0 Added argument `timeout`. Added argument `timeoutFlag`. The new arguments provide access to the fault-tolerant component features.

DESCRIPTION:

Call the associated user-supplied finalization routine for an `ESMF_GridComp`.

The arguments are:

gridcomp The `ESMF_GridComp` to call finalize routine for.

[importState] `ESMF_State` containing import data. If not present, a dummy argument will be passed to the user-supplied routine. The importState argument in the user code cannot be optional.

[exportState] `ESMF_State` containing export data. If not present, a dummy argument will be passed to the user-supplied routine. The exportState argument in the user code cannot be optional.

[clock] External `ESMF_Clock` for passing in time information. This is generally the parent component's clock, and will be treated as read-only by the child component. The child component can maintain a private clock for its own internal time computations. If not present, a dummy argument will be passed to the user-supplied routine. The clock argument in the user code cannot be optional.

[syncflag] Blocking behavior of this method call. See section 55.59 for a list of valid blocking options. Default option is `ESMF_SYNC_VASBLOCKING` which blocks PETs and their spawned off threads across each VAS but does not synchronize PETs that run in different VASs.

[phase] Component providers must document whether each of their routines are *single-phase* or *multi-phase*. Single-phase routines require only one invocation to complete their work. Multi-phase routines provide multiple subroutines to accomplish the work, accommodating components which must complete part of their work, return to the caller and allow other processing to occur, and then continue the original operation. For multiple-phase child components, this is the integer phase number to be invoked. For single-phase child components this argument is optional. The default is 1.

[timeout] The maximum period in seconds that this call will wait in communications with the actual component, before returning with a timeout condition. The default is 3600, i.e. 1 hour. The `timeout` argument is only supported for connected dual components.

[timeoutFlag] Returns `.true.` if the timeout was reached, `.false.` otherwise. If `timeoutFlag` was *not* provided, a timeout condition will lead to a return code of `rc \= ESMF_SUCCESS`. Otherwise the return value of `timeoutFlag` is the sole indicator of a timeout condition.

[userRc] Return code set by `userRoutine` before returning.

[rc] Return code; equals `ESMF_SUCCESS` if there are no errors.

17.4.7 ESMF_GridCompGet - Get GridComp information

INTERFACE:

```
recursive subroutine ESMF_GridCompGet(gridcomp, &
  gridIsPresent, grid, gridList, meshIsPresent, mesh, meshList, &
  locstreamIsPresent, locstream, locstreamList, xgridIsPresent, &
  xgrid, xgridList, importStateIsPresent, importState, &
  exportStateIsPresent, exportState, hconfigIsPresent, hconfig, &
  configIsPresent, config, configFileIsPresent, configFile, &
  clockIsPresent, clock, localPet, petCount, contextflag, &
  currentMethod, currentPhase, comptype, vmIsPresent, vm, name, rc)
```

ARGUMENTS:

```
  type(ESMF_GridComp),           intent(in)            :: gridcomp
-- The following arguments require argument keyword syntax (e.g. rc=rc). --
  logical,                       intent(out), optional :: gridIsPresent
  type(ESMF_Grid),               intent(out), optional :: grid
  type(ESMF_Grid), allocatable,  intent(out), optional :: gridList(:)
  logical,                       intent(out), optional :: meshIsPresent
  type(ESMF_Mesh),               intent(out), optional :: mesh
  type(ESMF_Mesh), allocatable,  intent(out), optional :: meshList(:)
  logical,                       intent(out), optional :: locstreamIsPresent
  type(ESMF_LocStream),          intent(out), optional :: locstream
  type(ESMF_LocStream), allocatable, intent(out), optional :: locstreamList(:)
  logical,                       intent(out), optional :: xgridIsPresent
  type(ESMF_XGrid),              intent(out), optional :: xgrid
  type(ESMF_XGrid), allocatable, intent(out), optional :: xgridList(:)
```

```
logical,                        intent(out), optional :: importStateIsPresent
type(ESMF_State),               intent(out), optional :: importState
logical,                        intent(out), optional :: exportStateIsPresent
type(ESMF_State),               intent(out), optional :: exportState
logical,                        intent(out), optional :: hconfigIsPresent
type(ESMF_HConfig),             intent(out), optional :: hconfig
logical,                        intent(out), optional :: configIsPresent
type(ESMF_Config),              intent(out), optional :: config
logical,                        intent(out), optional :: configFileIsPresent
character(len=*),               intent(out), optional :: configFile
logical,                        intent(out), optional :: clockIsPresent
type(ESMF_Clock),               intent(out), optional :: clock
integer,                        intent(out), optional :: localPet
integer,                        intent(out), optional :: petCount
type(ESMF_Context_Flag),        intent(out), optional :: contextflag
type(ESMF_Method_Flag),         intent(out), optional :: currentMethod
integer,                        intent(out), optional :: currentPhase
type(ESMF_CompType_Flag),       intent(out), optional :: comptype
logical,                        intent(out), optional :: vmIsPresent
type(ESMF_VM),                  intent(out), optional :: vm
character(len=*),               intent(out), optional :: name
integer,                        intent(out), optional :: rc
```

STATUS:

- This interface is backward compatible with ESMF versions starting at 5.2.0r. If code using this interface compiles with any version of ESMF starting with 5.2.0r, then it will compile with the current version.
- This interface was modified since ESMF version 5.2.0r. The fact that code using this interface compiles with the current ESMF version does not guarantee that it compiles with previous versions of this interface. If user code compatibility with version 5.2.0r is desired then care must be taken to limit the use of this interface to features that were available in the 5.2.0r release.
  Changes made after the 5.2.0r release:

  7.1.0r Added arguments `gridList`, `meshIsPresent`, `mesh`, `meshList`, `locstreamIsPresent`, `locstream`, `locstreamList`, `xgridIsPresent`, `xgrid`, and `xgridList`. These arguments add support for accessing references to multiple geom objects, either of the same type, or different type, associated with the same `ESMF_GridComp` object.

  8.7.0 Added arguments `hconfigIsPresent` and `hconfig` to simplify direct usage of `ESMF_HConfig` objects with Components.

DESCRIPTION:

Get information about an `ESMF_GridComp` object.

The arguments are:

gridcomp The `ESMF_GridComp` object being queried.

[gridIsPresent] Set to `.true.` if at least one `ESMF_Grid` object is associated with the `gridcomp` component. Set to `.false.` otherwise.

[grid] Return the `ESMF_Grid` object associated with the `gridcomp` component. If multiple `ESMF_Grid` objects are associated, return the first in the list. It is an error to query for `grid` if no `ESMF_Grid` object is associated with the `gridcomp` component. If unsure, query for `gridIsPresent` first, or use the `gridList` variant.

[gridList] Return a list of all `ESMF_Grid` objects associated with the `gridcomp` component. The size of the returned `gridList` corresponds to the number of `ESMF_Grid` objects associated. If no `ESMF_Grid` object is associated with the `gridcomp` component, the size of the returned `gridList` is zero.

[meshIsPresent] Set to `.true.` if at least one `ESMF_Mesh` object is associated with the `gridcomp` component. Set to `.false.` otherwise.

[mesh] Return the `ESMF_Mesh` object associated with the `gridcomp` component. If multiple `ESMF_Mesh` objects are associated, return the first in the list. It is an error to query for `mesh` if no `ESMF_Mesh` object is associated with the `gridcomp` component. If unsure, query for `meshIsPresent` first, or use the `meshList` variant.

[meshList] Return a list of all `ESMF_Mesh` objects associated with the `gridcomp` component. The size of the returned `meshList` corresponds to the number of `ESMF_Mesh` objects associated. If no `ESMF_Mesh` object is associated with the `gridcomp` component, the size of the returned `meshList` is zero.

[locstreamIsPresent] Set to `.true.` if at least one `ESMF_LocStream` object is associated with the `gridcomp` component. Set to `.false.` otherwise.

[locstream] Return the `ESMF_LocStream` object associated with the `gridcomp` component. If multiple `ESMF_LocStream` objects are associated, return the first in the list. It is an error to query for `locstream` if no `ESMF_Grid` object is associated with the `gridcomp` component. If unsure, query for `locstreamIsPresent` first, or use the `locstreamList` variant.

[locstreamList] Return a list of all `ESMF_LocStream` objects associated with the `gridcomp` component. The size of the returned `locstreamList` corresponds to the number of `ESMF_LocStream` objects associated. If no `ESMF_LocStream` object is associated with the `gridcomp` component, the size of the returned `locstreamList` is zero.

[xgridIsPresent] Set to `.true.` if at least one `ESMF_XGrid` object is associated with the `gridcomp` component. Set to `.false.` otherwise.

[xgrid] Return the `ESMF_XGrid` object associated with the `gridcomp` component. If multiple `ESMF_XGrid` objects are associated, return the first in the list. It is an error to query for `xgrid` if no `ESMF_XGrid` object is associated with the `gridcomp` component. If unsure, query for `xgridIsPresent` first, or use the `xgridList` variant.

[xgridList] Return a list of all `ESMF_XGrid` objects associated with the `gridcomp` component. The size of the returned `xgridList` corresponds to the number of `ESMF_XGrid` objects associated. If no `ESMF_XGrid` object is associated with the `gridcomp` component, the size of the returned `xgridList` is zero.

[importStateIsPresent] `.true.` if `importState` was set in GridComp object, `.false.` otherwise.

[importState] Return the associated import State. It is an error to query for the import State if none is associated with the GridComp. If unsure, get `importStateIsPresent` first to determine the status.

[exportStateIsPresent] `.true.` if `exportState` was set in GridComp object, `.false.` otherwise.

[exportState] Return the associated export State. It is an error to query for the export State if none is associated with the GridComp. If unsure, get `exportStateIsPresent` first to determine the status.

[hconfigIsPresent] `.true.` if `hconfig` is available in the GridComp object, `.false.` otherwise.

[hconfig] Return the associated HConfig object. It is an error to query for the HConfig object if none is associated with the GridComp. If unsure, get `hconfigIsPresent` first to determine the status.

[configIsPresent] `.true.` if `config` is available in the GridComp object, `.false.` otherwise.

[config] Return the associated Config object. It is an error to query for the Config if none is associated with the GridComp. If unsure, get `configIsPresent` first to determine the status.

[configFileIsPresent] `.true.` if `configFile` is available in the GridComp object, `.false.` otherwise.

[configFile] Return the associated configuration filename. It is an error to query for the configuration filename if none is associated with the GridComp. If unsure, get `configFileIsPresent` first to determine the status.

[clockIsPresent] `.true.` if `clock` was set in GridComp object, `.false.` otherwise.

[clock] Return the associated Clock. It is an error to query for the Clock if none is associated with the GridComp. If unsure, get `clockIsPresent` first to determine the status.

[localPet] Return the local PET id within the `ESMF_GridComp` object.

[petCount] Return the number of PETs in the the `ESMF_GridComp` object.

[contextflag] Return the `ESMF_Context_Flag` for this `ESMF_GridComp`. See section 55.10 for a complete list of valid flags.

[currentMethod] Return the current `ESMF_Method_Flag` of the `ESMF_GridComp` execution. See section 55.44 for a complete list of valid options.

[currentPhase] Return the current `phase` of the `ESMF_GridComp` execution.

[comptype] Return the Component type. See section 55.9 for a complete list of valid flags.

[vmIsPresent] `.true.` if `vm` was set in GridComp object, `.false.` otherwise.

[vm] Return the associated VM. It is an error to query for the VM if none is associated with the GridComp. If unsure, get `vmIsPresent` first to determine the status.

[name] Return the name of the `ESMF_GridComp`.

[rc] Return code; equals `ESMF_SUCCESS` if there are no errors.

17.4.8 ESMF_GridCompGetInternalState - Get private data block pointer - (DEPRECATED METHOD)

INTERFACE:

```
subroutine ESMF_GridCompGetInternalState(gridcomp, wrappedDataPointer, rc)
```

ARGUMENTS:

```
type(ESMF_GridComp)              :: gridcomp
type(wrapper)                    :: wrappedDataPointer
integer,            intent(out)  :: rc
```

STATUS:

- This interface is backward compatible with ESMF versions starting at 5.2.0r. If code using this interface compiles with any version of ESMF starting with 5.2.0r, then it will compile with the current version.
- **DEPRECATED METHOD** as of ESMF 8.9.0. Please use `ESMF_InternalStateGet`, section `22.4.5` instead.

DESCRIPTION:

Available to be called by an `ESMF_GridComp` at any time after `ESMF_GridCompSetInternalState` has been called. Since init, run, and finalize must be separate subroutines, data that they need to share in common can either be module global data, or can be allocated in a private data block and the address of that block can be registered with the framework and retrieved by this call. When running multiple instantiations of an `ESMF_GridComp`, for example during ensemble runs, it may be simpler to maintain private data specific to each run with private data blocks. A corresponding `ESMF_GridCompSetInternalState` call sets the data pointer to this block, and this call retrieves the data pointer. Note that the `wrappedDataPointer` argument needs to be a derived type which contains only a pointer of the type of the data block defined by the user. When making this call the pointer needs to be unassociated. When the call returns, the pointer will now reference the original data block which was set during the previous call to `ESMF_GridCompSetInternalState`.

Only the *last* data block set via `ESMF_GridCompSetInternalState` will be accessible.

CAUTION: If you are working with a compiler that does not support Fortran 2018 assumed-type dummy arguments, then this method does not have an explicit Fortran interface. In this case do not specify argument keywords when calling this method!

The arguments are:

gridcomp An `ESMF_GridComp` object.

wrappedDataPointer A derived type (wrapper), containing only an unassociated pointer to the private data block. The framework will fill in the pointer. When this call returns, the pointer is set to the same address set during the last `ESMF_GridCompSetInternalState` call. This level of indirection is needed to reliably set and retrieve the data block no matter which architecture or compiler is used.

rc Return code; equals `ESMF_SUCCESS` if there are no errors. Note: unlike most other ESMF routines, this argument is not optional because of implementation considerations.

17.4.9 ESMF_GridCompInitialize - Call the GridComp's initialize routine

INTERFACE:

```
recursive subroutine ESMF_GridCompInitialize(gridcomp, &
  importState, exportState, clock, syncflag, phase, timeout, timeoutFlag, &
  userRc, rc)
```

ARGUMENTS:

```
  type(ESMF_GridComp),  intent(inout)           :: gridcomp
-- The following arguments require argument keyword syntax (e.g. rc=rc). --
  type(ESMF_State),     intent(inout), optional :: importState
  type(ESMF_State),     intent(inout), optional :: exportState
  type(ESMF_Clock),     intent(inout), optional :: clock
  type(ESMF_Sync_Flag), intent(in),    optional :: syncflag
  integer,              intent(in),    optional :: phase
  integer,              intent(in),    optional :: timeout
  logical,              intent(out),   optional :: timeoutFlag
  integer,              intent(out),   optional :: userRc
  integer,              intent(out),   optional :: rc
```

STATUS:

- This interface is backward compatible with ESMF versions starting at 5.2.0r. If code using this interface compiles with any version of ESMF starting with 5.2.0r, then it will compile with the current version.
- This interface was modified since ESMF version 5.2.0r. The fact that code using this interface compiles with the current ESMF version does not guarantee that it compiles with previous versions of this interface. If user code compatibility with version 5.2.0r is desired then care must be taken to limit the use of this interface to features that were available in the 5.2.0r release.
  Changes made after the 5.2.0r release:

  5.3.0 Added argument `timeout`. Added argument `timeoutFlag`. The new arguments provide access to the fault-tolerant component features.

DESCRIPTION:

Call the associated user initialization routine for an `ESMF_GridComp`.

The arguments are:

gridcomp `ESMF_GridComp` to call initialize routine for.

[importState] `ESMF_State` containing import data for coupling. If not present, a dummy argument will be passed to the user-supplied routine. The importState argument in the user code cannot be optional.

[exportState] `ESMF_State` containing export data for coupling. If not present, a dummy argument will be passed to the user-supplied routine. The exportState argument in the user code cannot be optional.

[clock] External `ESMF_Clock` for passing in time information. This is generally the parent component's clock, and will be treated as read-only by the child component. The child component can maintain a private clock for its own internal time computations. If not present, a dummy argument will be passed to the user-supplied routine. The clock argument in the user code cannot be optional.

[syncflag] Blocking behavior of this method call. See section 55.59 for a list of valid blocking options. Default option is `ESMF_SYNC_VASBLOCKING` which blocks PETs and their spawned off threads across each VAS but does not synchronize PETs that run in different VASs.

[phase] Component providers must document whether each of their routines are *single-phase* or *multi-phase*. Single-phase routines require only one invocation to complete their work. Multi-phase routines provide multiple subroutines to accomplish the work, accommodating components which must complete part of their work, return to the caller and allow other processing to occur, and then continue the original operation. For multiple-phase child components, this is the integer phase number to be invoked. For single-phase child components this argument is optional. The default is 1.

[timeout] The maximum period in seconds that this call will wait in communications with the actual component, before returning with a timeout condition. The default is 3600, i.e. 1 hour. The `timeout` argument is only supported for connected dual components.

[timeoutFlag] Returns `.true.` if the timeout was reached, `.false.` otherwise. If `timeoutFlag` was *not* provided, a timeout condition will lead to a return code of `rc \= ESMF_SUCCESS`. Otherwise the return value of `timeoutFlag` is the sole indicator of a timeout condition.

[userRc] Return code set by `userRoutine` before returning.

[rc] Return code; equals `ESMF_SUCCESS` if there are no errors.

17.4.10 ESMF_GridCompIsCreated - Check whether a GridComp object has been created

INTERFACE:

```
function ESMF_GridCompIsCreated(gridcomp, rc)
```

RETURN VALUE:

```
logical :: ESMF_GridCompIsCreated
```

ARGUMENTS:

```
    type(ESMF_GridComp), intent(in)            :: gridcomp
 -- The following arguments require argument keyword syntax (e.g. rc=rc). --
    integer,             intent(out), optional :: rc
```

DESCRIPTION:

Return `.true.` if the `gridcomp` has been created. Otherwise return `.false.`. If an error occurs, i.e. `rc /= ESMF_SUCCESS` is returned, the return value of the function will also be `.false.`.

The arguments are:

gridcomp `ESMF_GridComp` queried.

[rc] Return code; equals `ESMF_SUCCESS` if there are no errors.

17.4.11 ESMF_GridCompIsPetLocal - Inquire if this GridComp is to execute on the calling PET

INTERFACE:

```
recursive function ESMF_GridCompIsPetLocal(gridcomp, rc)
```

RETURN VALUE:

```
logical :: ESMF_GridCompIsPetLocal
```

ARGUMENTS:

```
    type(ESMF_GridComp), intent(in)            :: gridcomp
 -- The following arguments require argument keyword syntax (e.g. rc=rc). --
    integer,             intent(out), optional :: rc
```

STATUS:

- This interface is backward compatible with ESMF versions starting at 5.2.0r. If code using this interface compiles with any version of ESMF starting with 5.2.0r, then it will compile with the current version.

DESCRIPTION:

Inquire if this `ESMF_GridComp` object is to execute on the calling PET.

The return value is `.true.` if the component is to execute on the calling PET, `.false.` otherwise.

The arguments are:

gridcomp `ESMF_GridComp` queried.

[rc] Return code; equals `ESMF_SUCCESS` if there are no errors.

17.4.12 ESMF_GridCompPrint - Print GridComp information

INTERFACE:

```
subroutine ESMF_GridCompPrint(gridcomp, rc)
```

ARGUMENTS:

```
     type(ESMF_GridComp), intent(in)            :: gridcomp
 -- The following arguments require argument keyword syntax (e.g. rc=rc). --
     integer,             intent(out), optional :: rc
```

STATUS:

- This interface is backward compatible with ESMF versions starting at 5.2.0r. If code using this interface compiles with any version of ESMF starting with 5.2.0r, then it will compile with the current version.

DESCRIPTION:

Prints information about an `ESMF_GridComp` to `stdout`.

The arguments are:

gridcomp `ESMF_GridComp` to print.

[rc] Return code; equals `ESMF_SUCCESS` if there are no errors.

17.4.13 ESMF_GridCompReadRestart - Call the GridComp's read restart routine

INTERFACE:

```
recursive subroutine ESMF_GridCompReadRestart(gridcomp, &
  importState, exportState, clock, syncflag, phase, timeout, timeoutFlag, &
  userRc, rc)
```

ARGUMENTS:

```
    type(ESMF_GridComp),  intent(inout)           :: gridcomp
-- The following arguments require argument keyword syntax (e.g. rc=rc). --
    type(ESMF_State),     intent(inout), optional :: importState
    type(ESMF_State),     intent(inout), optional :: exportState
    type(ESMF_Clock),     intent(inout), optional :: clock
    type(ESMF_Sync_Flag), intent(in),    optional :: syncflag
    integer,              intent(in),    optional :: phase
    integer,              intent(in),    optional :: timeout
    logical,              intent(out),   optional :: timeoutFlag
    integer,              intent(out),   optional :: userRc
    integer,              intent(out),   optional :: rc
```

STATUS:

- This interface is backward compatible with ESMF versions starting at 5.2.0r. If code using this interface compiles with any version of ESMF starting with 5.2.0r, then it will compile with the current version.
- This interface was modified since ESMF version 5.2.0r. The fact that code using this interface compiles with the current ESMF version does not guarantee that it compiles with previous versions of this interface. If user code compatibility with version 5.2.0r is desired then care must be taken to limit the use of this interface to features that were available in the 5.2.0r release.
  Changes made after the 5.2.0r release:

  5.3.0 Added argument `timeout`. Added argument `timeoutFlag`. The new arguments provide access to the fault-tolerant component features.

DESCRIPTION:

Call the associated user read restart routine for an `ESMF_GridComp`.

The arguments are:

gridcomp `ESMF_GridComp` to call run routine for.

[importState] `ESMF_State` containing import data. If not present, a dummy argument will be passed to the user-supplied routine. The importState argument in the user code cannot be optional.

[exportState] `ESMF_State` containing export data. If not present, a dummy argument will be passed to the user-supplied routine. The exportState argument in the user code cannot be optional.

[clock] External `ESMF_Clock` for passing in time information. This is generally the parent component's clock, and will be treated as read-only by the child component. The child component can maintain a private clock for its own internal time computations. If not present, a dummy argument will be passed to the user-supplied routine. The clock argument in the user code cannot be optional.

[syncflag] Blocking behavior of this method call. See section 55.59 for a list of valid blocking options. Default option is `ESMF_SYNC_VASBLOCKING` which blocks PETs and their spawned off threads across each VAS but does not synchronize PETs that run in different VASs.

[phase] Component providers must document whether each of their routines are *single-phase* or *multi-phase*. Single-phase routines require only one invocation to complete their work. Multi-phase routines provide multiple subroutines to accomplish the work, accommodating components which must complete part of their work, return to the caller and allow other processing to occur, and then continue the original operation. For multiple-phase child components, this is the integer phase number to be invoked. For single-phase child components this argument is optional. The default is 1.

[timeout] The maximum period in seconds that this call will wait in communications with the actual component, before returning with a timeout condition. The default is 3600, i.e. 1 hour. The `timeout` argument is only supported for connected dual components.

[timeoutFlag] Returns `.true.` if the timeout was reached, `.false.` otherwise. If `timeoutFlag` was *not* provided, a timeout condition will lead to a return code of `rc \= ESMF_SUCCESS`. Otherwise the return value of `timeoutFlag` is the sole indicator of a timeout condition.

[userRc] Return code set by `userRoutine` before returning.

[rc] Return code; equals `ESMF_SUCCESS` if there are no errors.

17.4.14 ESMF_GridCompRun - Call the GridComp's run routine

INTERFACE:

```
recursive subroutine ESMF_GridCompRun(gridcomp, &
  importState, exportState, clock, syncflag, phase, timeout, timeoutFlag, &
  userRc, rc)
```

ARGUMENTS:

```
    type(ESMF_GridComp),  intent(inout)           :: gridcomp
-- The following arguments require argument keyword syntax (e.g. rc=rc). --
    type(ESMF_State),     intent(inout), optional :: importState
    type(ESMF_State),     intent(inout), optional :: exportState
    type(ESMF_Clock),     intent(inout), optional :: clock
    type(ESMF_Sync_Flag), intent(in),    optional :: syncflag
    integer,              intent(in),    optional :: phase
    integer,              intent(in),    optional :: timeout
    logical,              intent(out),   optional :: timeoutFlag
    integer,              intent(out),   optional :: userRc
    integer,              intent(out),   optional :: rc
```

STATUS:

- This interface is backward compatible with ESMF versions starting at 5.2.0r. If code using this interface compiles with any version of ESMF starting with 5.2.0r, then it will compile with the current version.

- This interface was modified since ESMF version 5.2.0r. The fact that code using this interface compiles with the current ESMF version does not guarantee that it compiles with previous versions of this interface. If user code compatibility with version 5.2.0r is desired then care must be taken to limit the use of this interface to features that were available in the 5.2.0r release.
  Changes made after the 5.2.0r release:

  5.3.0 Added argument `timeout`. Added argument `timeoutFlag`. The new arguments provide access to the fault-tolerant component features.

DESCRIPTION:

Call the associated user run routine for an `ESMF_GridComp`.

The arguments are:

gridcomp `ESMF_GridComp` to call run routine for.

[importState] `ESMF_State` containing import data. If not present, a dummy argument will be passed to the user-supplied routine. The importState argument in the user code cannot be optional.

[exportState] `ESMF_State` containing export data. If not present, a dummy argument will be passed to the user-supplied routine. The exportState argument in the user code cannot be optional.

[clock] External `ESMF_Clock` for passing in time information. This is generally the parent component's clock, and will be treated as read-only by the child component. The child component can maintain a private clock for its own internal time computations. If not present, a dummy argument will be passed to the user-supplied routine. The clock argument in the user code cannot be optional.

[syncflag] Blocking behavior of this method call. See section 55.59 for a list of valid blocking options. Default option is `ESMF_SYNC_VASBLOCKING` which blocks PETs and their spawned off threads across each VAS but does not synchronize PETs that run in different VASs.

[phase] Component providers must document whether each of their routines are *single-phase* or *multi-phase*. Single-phase routines require only one invocation to complete their work. Multi-phase routines provide multiple subroutines to accomplish the work, accommodating components which must complete part of their work, return to the caller and allow other processing to occur, and then continue the original operation. For multiple-phase child components, this is the integer phase number to be invoked. For single-phase child components this argument is optional. The default is 1.

[timeout] The maximum period in seconds that this call will wait in communications with the actual component, before returning with a timeout condition. The default is 3600, i.e. 1 hour. The `timeout` argument is only supported for connected dual components.

[timeoutFlag] Returns `.true.` if the timeout was reached, `.false.` otherwise. If `timeoutFlag` was *not* provided, a timeout condition will lead to a return code of `rc \= ESMF_SUCCESS`. Otherwise the return value of `timeoutFlag` is the sole indicator of a timeout condition.

[userRc] Return code set by `userRoutine` before returning.

[rc] Return code; equals `ESMF_SUCCESS` if there are no errors.

17.4.15 ESMF_GridCompServiceLoop - Call the GridComp's service loop routine

INTERFACE:

```
recursive subroutine ESMF_GridCompServiceLoop(gridcomp, &
  importState, exportState, clock, syncflag, port, timeout, timeoutFlag, rc)
```

ARGUMENTS:

```
     type(ESMF_GridComp),  intent(inout)           :: gridcomp
 -- The following arguments require argument keyword syntax (e.g. rc=rc). --
     type(ESMF_State),     intent(inout), optional :: importState
     type(ESMF_State),     intent(inout), optional :: exportState
     type(ESMF_Clock),     intent(inout), optional :: clock
     type(ESMF_Sync_Flag), intent(in),    optional :: syncflag
     integer,              intent(in),    optional :: port
     integer,              intent(in),    optional :: timeout
     logical,              intent(out),   optional :: timeoutFlag
     integer,              intent(out),   optional :: rc
```

DESCRIPTION:

Call the ServiceLoop routine for an `ESMF_GridComp`. This tries to establish a "component tunnel" between the *actual* Component (calling this routine) and a `dual` Component connecting to it through a matching SetServices call.

The arguments are:

gridcomp `ESMF_GridComp` to call service loop routine for.

[importState] `ESMF_State` containing import data for coupling. If not present, a dummy argument will be passed to the user-supplied routine. The importState argument in the user code cannot be optional.

[exportState] `ESMF_State` containing export data for coupling. If not present, a dummy argument will be passed to the user-supplied routine. The exportState argument in the user code cannot be optional.

[clock] External `ESMF_Clock` for passing in time information. This is generally the parent component's clock, and will be treated as read-only by the child component. The child component can maintain a private clock for its own internal time computations. If not present, a dummy argument will be passed to the user-supplied routine. The clock argument in the user code cannot be optional.

[syncflag] Blocking behavior of this method call. See section 55.59 for a list of valid blocking options. Default option is `ESMF_SYNC_VASBLOCKING` which blocks PETs and their spawned off threads across each VAS but does not synchronize PETs that run in different VASs.

[port] In case a port number is provided, the "component tunnel" is established using sockets. The actual component side, i.e. the side that calls into `ESMF_GridCompServiceLoop()`, starts to listen on the specified port as the server. The valid port range is [1024, 65535]. In case the `port` argument is *not* specified, the "component tunnel" is established within the same executable using local communication methods (e.g. MPI).

[timeout] The maximum period in seconds that this call will wait for communications with the dual component, before returning with a timeout condition. The default is 3600, i.e. 1 hour. (NOTE: Currently this option is only available for socket based component tunnels.)

[timeoutFlag] Returns `.true.` if the timeout was reached, `.false.` otherwise. If `timeoutFlag` was *not* provided, a timeout condition will lead to a return code of `rc \= ESMF_SUCCESS`. Otherwise the return value of `timeoutFlag` is the sole indicator of a timeout condition.

[rc] Return code; equals `ESMF_SUCCESS` if there are no errors.

17.4.16 ESMF_GridCompSet - Set or reset information about the GridComp

INTERFACE:

```
subroutine ESMF_GridCompSet(gridcomp, grid, gridList, &
  mesh, meshList, locstream, locstreamList, xgrid, xgridList, &
  hconfig, config, configFile, clock, name, rc)
```

ARGUMENTS:

```
    type(ESMF_GridComp),    intent(inout)         :: gridcomp
-- The following arguments require argument keyword syntax (e.g. rc=rc). --
    type(ESMF_Grid),        intent(in),  optional :: grid
    type(ESMF_Grid),        intent(in),  optional :: gridList(:)
    type(ESMF_Mesh),        intent(in),  optional :: mesh
    type(ESMF_Mesh),        intent(in),  optional :: meshList(:)
    type(ESMF_LocStream),   intent(in),  optional :: locstream
    type(ESMF_LocStream),   intent(in),  optional :: locstreamList(:)
    type(ESMF_XGrid),       intent(in),  optional :: xgrid
    type(ESMF_XGrid),       intent(in),  optional :: xgridList(:)
    type(ESMF_HConfig),     intent(in),  optional :: hconfig
    type(ESMF_Config),      intent(in),  optional :: config
    character(len=*),       intent(in),  optional :: configFile
    type(ESMF_Clock),       intent(in),  optional :: clock
    character(len=*),       intent(in),  optional :: name
    integer,                intent(out), optional :: rc
```

STATUS:

- This interface is backward compatible with ESMF versions starting at 5.2.0r. If code using this interface compiles with any version of ESMF starting with 5.2.0r, then it will compile with the current version.
- This interface was modified since ESMF version 5.2.0r. The fact that code using this interface compiles with the current ESMF version does not guarantee that it compiles with previous versions of this interface. If user code compatibility with version 5.2.0r is desired then care must be taken to limit the use of this interface to features that were available in the 5.2.0r release.
  Changes made after the 5.2.0r release:

  7.1.0r Added arguments `gridList`, `mesh`, `meshList`, `locstream`, `locstreamList`, `xgrid`, and `xgridList`. These arguments add support for holding references to multiple geom objects, either of the same type, or different type, in the same `ESMF_GridComp` object.

  8.7.0 Added argument `hconfig` to simplify direct usage of `ESMF_HConfig` objects with Components.

DESCRIPTION:

Sets or resets information about an `ESMF_GridComp`.

The arguments are:

gridcomp ESMF_GridComp to change.

[grid] Associate an ESMF_Grid object with the gridcomp component. This is simply a convenience feature for the user. The ESMF library code does not access the grid object. The grid argument is mutually exclusive with the gridList argument. If both arguments are provided, the routine will fail, and an error is returned in rc. By default, i.e. if neither grid nor gridList are provided, the ESMF_Grid association of the incoming gridcomp component remains unchanged.

[gridList] Associate a list of ESMF_Grid objects with the gridcomp component. This is simply a convenience feature for the user. The ESMF library code does not access the gridList object. The gridList argument is mutually exclusive with the grid argument. If both arguments are provided, the routine will fail, and an error is returned in rc. By default, i.e. if neither grid nor gridList are provided, the ESMF_Grid association of the incoming gridcomp component remains unchanged.

[mesh] Associate an ESMF_Mesh object with the gridcomp component. This is simply a convenience feature for the user. The ESMF library code does not access the mesh object. The mesh argument is mutually exclusive with the meshList argument. If both arguments are provided, the routine will fail, and an error is returned in rc. By default, i.e. if neither mesh nor meshList are provided, the ESMF_Mesh association of the incoming gridcomp component remains unchanged.

[meshList] Associate a list of ESMF_Mesh objects with the gridcomp component. This is simply a convenience feature for the user. The ESMF library code does not access the meshList object. The meshList argument is mutually exclusive with the mesh argument. If both arguments are provided, the routine will fail, and an error is returned in rc. By default, i.e. if neither mesh nor meshList are provided, the ESMF_Mesh association of the incoming gridcomp component remains unchanged.

[locstream] Associate an ESMF_LocStream object with the gridcomp component. This is simply a convenience feature for the user. The ESMF library code does not access the locstream object. The locstream argument is mutually exclusive with the locstreamList argument. If both arguments are provided, the routine will fail, and an error is returned in rc. By default, i.e. if neither locstream nor locstreamList are provided, the ESMF_LocStream association of the incoming gridcomp component remains unchanged.

[locstreamList] Associate a list of ESMF_LocStream objects with the gridcomp component. This is simply a convenience feature for the user. The ESMF library code does not access the locstreamList object. The locstreamList argument is mutually exclusive with the locstream argument. If both arguments are provided, the routine will fail, and an error is returned in rc. By default, i.e. if neither locstream nor locstreamList are provided, the ESMF_LocStream association of the incoming gridcomp component remains unchanged.

[xgrid] Associate an ESMF_XGrid object with the gridcomp component. This is simply a convenience feature for the user. The ESMF library code does not access the xgrid object. The xgrid argument is mutually exclusive with the xgridList argument. If both arguments are provided, the routine will fail, and an error is returned in rc. By default, i.e. if neither xgrid nor xgridList are provided, the ESMF_XGrid association of the incoming gridcomp component remains unchanged.

[xgridList] Associate a list of ESMF_XGrid objects with the gridcomp component. This is simply a convenience feature for the user. The ESMF library code does not access the xgridList object. The xgridList argument is mutually exclusive with the xgrid argument. If both arguments are provided, the routine will fail, and an error is returned in rc. By default, i.e. if neither xgrid nor xgridList are provided, the ESMF_XGrid association of the incoming gridcomp component remains unchanged.

[hconfig] An already-created ESMF_HConfig object to be attached to the component. Only one of hconfig, config, or configFile must be specified.

[config] An already-created ESMF_Config object to be attached to the component. Only one of hconfig, config, or configFile must be specified.

[configFile] The filename of a config file. If specified, a new ESMF_Config object is created and attached to the component. The configFile file is opened and associated with the new config object. Only one of hconfig, config, or configFile must be specified.

[clock] Set the private clock for this `ESMF_GridComp`.

[name] Set the name of the `ESMF_GridComp`.

[rc] Return code; equals `ESMF_SUCCESS` if there are no errors.

17.4.17 ESMF_GridCompSetEntryPoint - Set user routine as entry point for standard GridComp method

INTERFACE:

```
recursive subroutine ESMF_GridCompSetEntryPoint(gridcomp, methodflag, &
  userRoutine, phase, rc)
```

ARGUMENTS:

```
  type(ESMF_GridComp),    intent(inout)         :: gridcomp
  type(ESMF_Method_Flag), intent(in)            :: methodflag
  interface
    subroutine userRoutine(gridcomp, importState, exportState, clock, rc)
      use ESMF_CompMod
      use ESMF_StateMod
      use ESMF_ClockMod
      implicit none
      type(ESMF_GridComp)         :: gridcomp     ! must not be optional
      type(ESMF_State)            :: importState  ! must not be optional
      type(ESMF_State)            :: exportState  ! must not be optional
      type(ESMF_Clock)            :: clock        ! must not be optional
      integer, intent(out)        :: rc           ! must not be optional
    end subroutine
  end interface
-- The following arguments require argument keyword syntax (e.g. rc=rc). --
  integer,                intent(in),  optional :: phase
  integer,                intent(out), optional :: rc
```

STATUS:

- This interface is backward compatible with ESMF versions starting at 5.2.0r. If code using this interface compiles with any version of ESMF starting with 5.2.0r, then it will compile with the current version.

DESCRIPTION:

Registers a user-supplied `userRoutine` as the entry point for one of the predefined Component `methodflag`s. After this call the `userRoutine` becomes accessible via the standard Component method API.

The arguments are:

gridcomp An `ESMF_GridComp` object.

methodflag One of a set of predefined Component methods - e.g. `ESMF_METHOD_INITIALIZE`, `ESMF_METHOD_RUN`, `ESMF_METHOD_FINALIZE`. See section 55.44 for a complete list of valid method options.

userRoutine The user-supplied subroutine to be associated for this Component `method`. Argument types, intent and order must match the interface signature, and must not have the `optional` attribute. Prior to Fortran-2008, the subroutine must be either a module scope procedure, or an external procedure that has a matching interface block specified for it. An internal procedure which is contained within another procedure must not be used. From Fortran-2008 onwards, an internal procedure contained within either a main program or a module procedure may be used. If the internal procedure is contained within a module procedure, it is subject to initialization requirements. See: 16.4.9

[phase] The `phase` number for multi-phase methods. For single phase methods the `phase` argument can be omitted. The default setting is 1.

[rc] Return code; equals `ESMF_SUCCESS` if there are no errors.

17.4.18 ESMF_GridCompSetInternalState - Set private data block pointer - (DEPRECATED METHOD)

INTERFACE:

```
subroutine ESMF_GridCompSetInternalState(gridcomp, wrappedDataPointer, rc)
```

ARGUMENTS:

```
type(ESMF_GridComp)              :: gridcomp
type(wrapper)                    :: wrappedDataPointer
integer,            intent(out)  :: rc
```

STATUS:

- This interface is backward compatible with ESMF versions starting at 5.2.0r. If code using this interface compiles with any version of ESMF starting with 5.2.0r, then it will compile with the current version.
- **DEPRECATED METHOD** as of ESMF 8.9.0. Please use `ESMF_InternalStateAdd`, section `22.4.2` instead.

DESCRIPTION:

Available to be called by an `ESMF_GridComp` at any time, but expected to be most useful when called during the registration process, or initialization. Since init, run, and finalize must be separate subroutines, data that they need to share in common can either be module global data, or can be allocated in a private data block and the address of that block can be registered with the framework and retrieved by subsequent calls. When running multiple instantiations of an `ESMF_GridComp`, for example during ensemble runs, it may be simpler to maintain private data specific to each run with private data blocks. A corresponding `ESMF_GridCompGetInternalState` call retrieves the data pointer.

Only the *last* data block set via `ESMF_GridCompSetInternalState` will be accessible.

CAUTION: If you are working with a compiler that does not support Fortran 2018 assumed-type dummy arguments, then this method does not have an explicit Fortran interface. In this case do not specify argument keywords when calling this method!

The arguments are:

gridcomp An `ESMF_GridComp` object.

wrappedDataPointer A pointer to the private data block, wrapped in a derived type which contains only a pointer to the block. This level of indirection is needed to reliably set and retrieve the data block no matter which architecture or compiler is used.

rc Return code; equals `ESMF_SUCCESS` if there are no errors. Note: unlike most other ESMF routines, this argument is not optional because of implementation considerations.

17.4.19 ESMF_GridCompSetServices - Call user routine to register GridComp methods

INTERFACE:

```
recursive subroutine ESMF_GridCompSetServices(gridcomp, &
  userRoutine, userRc, rc)
```

ARGUMENTS:

```
  type(ESMF_GridComp), intent(inout)         :: gridcomp
  interface
    subroutine userRoutine(gridcomp, rc)
      use ESMF_CompMod
      implicit none
      type(ESMF_GridComp)        :: gridcomp ! must not be optional
      integer, intent(out)       :: rc       ! must not be optional
    end subroutine
  end interface
-- The following arguments require argument keyword syntax (e.g. rc=rc). --
  integer,             intent(out), optional :: userRc
  integer,             intent(out), optional :: rc
```

STATUS:

- This interface is backward compatible with ESMF versions starting at 5.2.0r. If code using this interface compiles with any version of ESMF starting with 5.2.0r, then it will compile with the current version.

DESCRIPTION:

Call into user provided `userRoutine` which is responsible for setting Component's Initialize(), Run(), and Finalize() services.

The arguments are:

gridcomp Gridded Component.

userRoutine The Component writer must supply a subroutine with the exact interface shown above for the `userRoutine` argument. Arguments in `userRoutine` must not be declared as optional, and the types,

intent and order must match. Prior to Fortran-2008, the subroutine must be either a module scope procedure, or an external procedure that has a matching interface block specified for it. An internal procedure which is contained within another procedure must not be used. From Fortran-2008 onwards, an internal procedure contained within either a main program or a module procedure may be used. If the internal procedure is contained within a module procedure, it is subject to initialization requirements. See: 16.4.9

The `userRoutine`, when called by the framework, must make successive calls to `ESMF_GridCompSetEntryPoint()` to preset callback routines for standard Component Initialize(), Run(), and Finalize() methods.

[userRc] Return code set by `userRoutine` before returning.

[rc] Return code; equals `ESMF_SUCCESS` if there are no errors.

17.4.20 ESMF_GridCompSetServices - Call user routine through name lookup, to register GridComp methods

INTERFACE:

```
! Private name; call using ESMF_GridCompSetServices()
recursive subroutine ESMF_GridCompSetServicesShObj(gridcomp, userRoutine, &
  sharedObj, userRoutineFound, userRc, rc)
```

ARGUMENTS:

```
  type(ESMF_GridComp), intent(inout)         :: gridcomp
  character(len=*),    intent(in)            :: userRoutine
-- The following arguments require argument keyword syntax (e.g. rc=rc). --
  character(len=*),    intent(in),  optional :: sharedObj
  logical,             intent(out), optional :: userRoutineFound
  integer,             intent(out), optional :: userRc
  integer,             intent(out), optional :: rc
```

STATUS:

- This interface is backward compatible with ESMF versions starting at 5.2.0r. If code using this interface compiles with any version of ESMF starting with 5.2.0r, then it will compile with the current version.
- This interface was modified since ESMF version 5.2.0r. The fact that code using this interface compiles with the current ESMF version does not guarantee that it compiles with previous versions of this interface. If user code compatibility with version 5.2.0r is desired then care must be taken to limit the use of this interface to features that were available in the 5.2.0r release.
  Changes made after the 5.2.0r release:

  6.3.0r Added argument `userRoutineFound`. The new argument provides a way to test availability without causing error conditions.

DESCRIPTION:

Call into a user provided routine which is responsible for setting Component's Initialize(), Run(), and Finalize() services. The named `userRoutine` must exist in the executable, or in the shared object specified by `sharedObj`. In the latter case all of the platform specific details about dynamic linking and loading apply.

The arguments are:

gridcomp Gridded Component.

userRoutine Name of routine to be called, specified as a character string. The Component writer must supply a subroutine with the exact interface shown for `userRoutine` below. Arguments must not be declared as optional, and the types, intent and order must match. Prior to Fortran-2008, the subroutine must be either a module scope procedure, or an external procedure that has a matching interface block specified for it. An internal procedure which is contained within another procedure must not be used. From Fortran-2008 onwards, an internal procedure contained within either a main program or a module procedure may be used. If the internal procedure is contained within a module procedure, it is subject to initialization requirements. See: 16.4.9

INTERFACE:

```
interface
  subroutine userRoutine(gridcomp, rc)
    type(ESMF_GridComp)  :: gridcomp   ! must not be optional
    integer, intent(out) :: rc         ! must not be optional
  end subroutine
end interface
```

DESCRIPTION:

The `userRoutine`, when called by the framework, must make successive calls to `ESMF_GridCompSetEntryPoint()` to preset callback routines for standard Component Initialize(), Run(), and Finalize() methods.

[sharedObj] Name of shared object that contains `userRoutine`. The asterisk character `(*)` is supported as a wildcard for the file name suffix. When present, the asterisk is replaced by "so", "dylib", and "dll", in this order, and the first successfully loaded object is used to search for `userRoutine`. If the `sharedObj` argument is not provided, the executable itself is searched for `userRoutine`.

[userRoutineFound] Report back whether the specified `userRoutine` was found and executed, or was not available. If this argument is present, not finding the `userRoutine` will not result in returning an error in `rc`. The default is to return an error if the `userRoutine` cannot be found.

[userRc] Return code set by `userRoutine` before returning.

[rc] Return code; equals `ESMF_SUCCESS` if there are no errors.

17.4.21 ESMF_GridCompSetServices - Set to serve as Dual Component for an Actual Component

INTERFACE:

```
! Private name; call using ESMF_GridCompSetServices()
recursive subroutine ESMF_GridCompSetServicesComp(gridcomp, &
  actualGridcomp, rc)
```

ARGUMENTS:

```
    type(ESMF_GridComp), intent(inout)         :: gridcomp
    type(ESMF_GridComp), intent(in)            :: actualGridcomp
 -- The following arguments require argument keyword syntax (e.g. rc=rc). --
    integer,             intent(out), optional :: rc
```

DESCRIPTION:

Set the services of a Gridded Component to serve a "dual" Component for an "actual" Component. The component tunnel is VM based.

The arguments are:

gridcomp Dual Gridded Component.

actualGridcomp Actual Gridded Component.

[rc] Return code; equals `ESMF_SUCCESS` if there are no errors.

17.4.22 ESMF_GridCompSetServices - Set to serve as Dual Component for an Actual Component through sockets

INTERFACE:

```
  ! Private name; call using ESMF_GridCompSetServices()
  recursive subroutine ESMF_GridCompSetServicesSock(gridcomp, port, &
    server, timeout, timeoutFlag, rc)
```

ARGUMENTS:

```
    type(ESMF_GridComp), intent(inout)         :: gridcomp
    integer,             intent(in)            :: port
 -- The following arguments require argument keyword syntax (e.g. rc=rc). --
    character(len=*),    intent(in),  optional :: server
    integer,             intent(in),  optional :: timeout
    logical,             intent(out), optional :: timeoutFlag
    integer,             intent(out), optional :: rc
```

DESCRIPTION:

Set the services of a Gridded Component to serve a "dual" Component for an "actual" Component. The component tunnel is socket based.

The arguments are:

gridcomp Dual Gridded Component.

port Port number under which the actual component is being served. The valid port range is [1024, 65535].

[server] Server name where the actual component is being served. The default, i.e. if the `server` argument was not provided, is `localhost`.

[timeout] The maximum period in seconds that this call will wait in communications with the actual component, before returning with a timeout condition. The default is 3600, i.e. 1 hour.

[timeoutFlag] Returns `.true.` if the timeout was reached, `.false.` otherwise. If `timeoutFlag` was *not* provided, a timeout condition will lead to a return code of `rc \= ESMF_SUCCESS`. Otherwise the return value of `timeoutFlag` is the sole indicator of a timeout condition.

[rc] Return code; equals `ESMF_SUCCESS` if there are no errors.

17.4.23 ESMF_GridCompSetVM - Call user routine to set GridComp VM properties

INTERFACE:

```
recursive subroutine ESMF_GridCompSetVM(gridcomp, userRoutine, &
  userRc, rc)
```

ARGUMENTS:

```
  type(ESMF_GridComp), intent(inout)         :: gridcomp
  interface
    subroutine userRoutine(gridcomp, rc)
      use ESMF_CompMod
      implicit none
      type(ESMF_GridComp)        :: gridcomp ! must not be optional
      integer, intent(out)       :: rc       ! must not be optional
    end subroutine
  end interface
-- The following arguments require argument keyword syntax (e.g. rc=rc). --
  integer,             intent(out), optional :: userRc
  integer,             intent(out), optional :: rc
```

STATUS:

- This interface is backward compatible with ESMF versions starting at 5.2.0r. If code using this interface compiles with any version of ESMF starting with 5.2.0r, then it will compile with the current version.

DESCRIPTION:

Optionally call into user provided `userRoutine` which is responsible for setting Component's VM properties.

The arguments are:

gridcomp Gridded Component.

userRoutine The Component writer must supply a subroutine with the exact interface shown above for the `userRoutine` argument. Arguments in `userRoutine` must not be declared as optional, and the types, intent and order must match. Prior to Fortran-2008, the subroutine must be either a module scope procedure, or an external procedure that has a matching interface block specified for it. An internal procedure which is contained within another procedure must not be used. From Fortran-2008 onwards, an internal procedure contained

within either a main program or a module procedure may be used. If the internal procedure is contained within a module procedure, it is subject to initialization requirements. See: 16.4.9

The subroutine, when called by the framework, is expected to use any of the `ESMF_GridCompSetVMxxx()` methods to set the properties of the VM associated with the Gridded Component.

[userRc] Return code set by `userRoutine` before returning.

[rc] Return code; equals `ESMF_SUCCESS` if there are no errors.

17.4.24 ESMF_GridCompSetVM - Call user routine through name lookup, to set GridComp VM properties

INTERFACE:

```
! Private name; call using ESMF_GridCompSetVM()
recursive subroutine ESMF_GridCompSetVMShObj(gridcomp, userRoutine, &
  sharedObj, userRoutineFound, userRc, rc)
```

ARGUMENTS:

```
  type(ESMF_GridComp), intent(inout)         :: gridcomp
  character(len=*),    intent(in)            :: userRoutine
-- The following arguments require argument keyword syntax (e.g. rc=rc). --
  character(len=*),    intent(in),  optional :: sharedObj
  logical,             intent(out), optional :: userRoutineFound
  integer,             intent(out), optional :: userRc
  integer,             intent(out), optional :: rc
```

STATUS:

- This interface is backward compatible with ESMF versions starting at 5.2.0r. If code using this interface compiles with any version of ESMF starting with 5.2.0r, then it will compile with the current version.
- This interface was modified since ESMF version 5.2.0r. The fact that code using this interface compiles with the current ESMF version does not guarantee that it compiles with previous versions of this interface. If user code compatibility with version 5.2.0r is desired then care must be taken to limit the use of this interface to features that were available in the 5.2.0r release.
  Changes made after the 5.2.0r release:

  8.4.0 Added argument `userRoutineFound`. The new argument provides a way to test availability without causing error conditions.

DESCRIPTION:

Optionally call into user provided `userRoutine` which is responsible for setting Component's VM properties. The named `userRoutine` must exist in the executable, or in the shared object specified by `sharedObj`. In the latter case all of the platform specific details about dynamic linking and loading apply.

The arguments are:

gridcomp Gridded Component.

userRoutine Routine to be called, specified as a character string. The Component writer must supply a subroutine with the exact interface shown for `userRoutine` below. Arguments must not be declared as optional, and the types, intent and order must match. Prior to Fortran-2008, the subroutine must be either a module scope procedure, or an external procedure that has a matching interface block specified for it. An internal procedure which is contained within another procedure must not be used. From Fortran-2008 onwards, an internal procedure contained within either a main program or a module procedure may be used. If the internal procedure is contained within a module procedure, it is subject to initialization requirements. See: 16.4.9

INTERFACE:

```
interface
  subroutine userRoutine(gridcomp, rc)
    type(ESMF_GridComp)  :: gridcomp    ! must not be optional
    integer, intent(out) :: rc          ! must not be optional
  end subroutine
end interface
```

DESCRIPTION:

The subroutine, when called by the framework, is expected to use any of the `ESMF_GridCompSetVMxxx()` methods to set the properties of the VM associated with the Gridded Component.

[sharedObj] Name of shared object that contains `userRoutine`. The asterisk character `(*)` is supported as a wildcard for the file name suffix. When present, the asterisk is replaced by "so", "dylib", and "dll", in this order, and the first successfully loaded object is used to search for `userRoutine`. If the `sharedObj` argument is not provided, the executable itself is searched for `userRoutine`.

[userRoutineFound] Report back whether the specified `userRoutine` was found and executed, or was not available. If this argument is present, not finding the `userRoutine` will not result in returning an error in `rc`. The default is to return an error if the `userRoutine` cannot be found.

[userRc] Return code set by `userRoutine` before returning.

[rc] Return code; equals `ESMF_SUCCESS` if there are no errors.

17.4.25 ESMF_GridCompSetVMMaxPEs - Associate PEs with PETs in GridComp VM

INTERFACE:

```
subroutine ESMF_GridCompSetVMMaxPEs(gridcomp, &
  maxPeCountPerPet, prefIntraProcess, prefIntraSsi, prefInterSsi, &
  pthreadMinStackSize, openMpHandling, openMpNumThreads, &
  forceChildPthreads, rc)
```

ARGUMENTS:

```
  type(ESMF_GridComp), intent(inout)         :: gridcomp
-- The following arguments require argument keyword syntax (e.g. rc=rc). --
  integer,             intent(in),  optional :: maxPeCountPerPet
  integer,             intent(in),  optional :: prefIntraProcess
  integer,             intent(in),  optional :: prefIntraSsi
```

```
integer,              intent(in),  optional :: prefInterSsi
integer,              intent(in),  optional :: pthreadMinStackSize
character(*),         intent(in),  optional :: openMpHandling
integer,              intent(in),  optional :: openMpNumThreads
logical,              intent(in),  optional :: forceChildPthreads
integer,              intent(out), optional :: rc
```

DESCRIPTION:

Set characteristics of the `ESMF_VM` for this `ESMF_GridComp`. Attempts to associate up to `maxPeCountPerPet` PEs with each PET. Only PEs that are located on the same single system image (SSI) can be associated with the same PET. Within this constraint the call tries to get as close as possible to the number specified by `maxPeCountPerPet`.

The other constraint to this call is that the number of PEs is preserved. This means that the child Component in the end is associated with as many PEs as the parent Component provided to the child. The number of child PETs however is adjusted according to the above rule.

The typical use of `ESMF_GridCompSetVMMaxPEs()` is to allocate multiple PEs per PET in a Component for user-level threading, e.g. OpenMP.

The arguments are:

gridcomp `ESMF_GridComp` to set the `ESMF_VM` for.

[maxPeCountPerPet] Maximum number of PEs on each PET. Default for each SSI is the local number of PEs.

[prefIntraProcess] Communication preference within a single process. *Currently options not documented. Use default.*

[prefIntraSsi] Communication preference within a single system image (SSI). *Currently options not documented. Use default.*

[prefInterSsi] Communication preference between different single system images (SSIs). *Currently options not documented. Use default.*

[pthreadMinStackSize] Minimum stack size in byte of any child PET executing as Pthread. By default single threaded child PETs do *not* execute as Pthread, and their stack size is unaffected by this argument. However, for multi-threaded child PETs, or if `forceChildPthreads` is `.true.`, child PETs execute as Pthreads with their own private stack.

For cases where OpenMP threads are used by the user code, each thread allocates its own private stack. For all threads *other* than the master, the stack size is set via the typical `OMP_STACKSIZE` environment variable mechanism. The PET itself, however, becomes the *master* of the OpenMP thread team, and is not affected by `OMP_STACKSIZE`. It is the master's stack that can be sized via the `pthreadMinStackSize` argument, and a large enough size is often critical.

When `pthreadMinStackSize` is absent, the default is to use the system default set by the `limit` or `ulimit` command. However, the stack of a Pthread cannot be unlimited, and a shell *stacksize* setting of *unlimited*, or any setting below the ESMF implemented minimum, will result in setting the stack size to 20MiB (the ESMF minimum). Depending on how much private data is used by the user code under the master thread, the default might be too small, and `pthreadMinStackSize` must be used to allocate sufficient stack space.

[openMpHandling] Handling of OpenMP threads. Supported options are:

- `"none"` - OpenMP handling is completely left to the user.
- `"set"` - ESMF uses the `omp_set_num_threads()` API to set the number of OpenMP threads in each team.
- `"init"` - ESMF sets the number of OpenMP threads in each team, and triggers the instantiation of the team.

- "pin" (default) - ESMF sets the number of OpenMP threads in each team, triggers the instantiation of the team, and pins each OpenMP thread to the corresponding PE.

[openMpNumThreads] Number of OpenMP threads in each OpenMP thread team. This can be any positive number. By default, or if openMpNumThreads is negative, each PET sets the number of OpenMP threads to its local peCount.

[forceChildPthreads] For .true., force each child PET to execute in its own Pthread. By default, .false., single PETs spawned from a parent PET execute in the same thread (or MPI process) as the parent PET. Multiple child PETs spawned by the same parent PET always execute as their own Pthreads.

[rc] Return code; equals ESMF_SUCCESS if there are no errors.

17.4.26 ESMF_GridCompSetVMMaxThreads - Set multi-threaded PETs in GridComp VM

INTERFACE:

```
subroutine ESMF_GridCompSetVMMaxThreads(gridcomp, &
  maxPetCountPerVas, prefIntraProcess, prefIntraSsi, prefInterSsi, &
  pthreadMinStackSize, forceChildPthreads, rc)
```

ARGUMENTS:

```
  type(ESMF_GridComp), intent(inout)         :: gridcomp
-- The following arguments require argument keyword syntax (e.g. rc=rc). --
  integer,             intent(in),  optional :: maxPetCountPerVas
  integer,             intent(in),  optional :: prefIntraProcess
  integer,             intent(in),  optional :: prefIntraSsi
  integer,             intent(in),  optional :: prefInterSsi
  integer,             intent(in),  optional :: pthreadMinStackSize
  logical,             intent(in),  optional :: forceChildPthreads
  integer,             intent(out), optional :: rc
```

DESCRIPTION:

Set characteristics of the ESMF_VM for this ESMF_GridComp. Attempts to provide maxPetCountPerVas threaded PETs in each virtual address space (VAS). Only as many threaded PETs as there are PEs located on the single system image (SSI) can be associated with the VAS. Within this constraint the call tries to get as close as possible to the number specified by maxPetCountPerVas.

The other constraint to this call is that the number of PETs is preserved. This means that the child Component in the end is associated with as many PETs as the parent Component provided to the child. The threading level of the child PETs however is adjusted according to the above rule.

The typical use of ESMF_GridCompSetVMMaxThreads() is to run a Component multi-threaded with groups of PETs executing within a common virtual address space.

The arguments are:

gridcomp ESMF_GridComp to set the ESMF_VM for.

[maxPetCountPerVas] Maximum number of threaded PETs in each virtual address space (VAS). Default for each SSI is the local number of PEs.

[prefIntraProcess] Communication preference within a single process. *Currently options not documented. Use default.*

[prefIntraSsi] Communication preference within a single system image (SSI). *Currently options not documented. Use default.*

[prefInterSsi] Communication preference between different single system images (SSIs). *Currently options not documented. Use default.*

[pthreadMinStackSize] Minimum stack size in byte of any child PET executing as Pthread. By default single threaded child PETs do *not* execute as Pthread, and their stack size is unaffected by this argument. However, for multi-threaded child PETs, or if `forceChildPthreads` is `.true.`, child PETs execute as Pthreads with their own private stack.

For cases where OpenMP threads are used by the user code, each thread allocates its own private stack. For all threads *other* than the master, the stack size is set via the typical `OMP_STACKSIZE` environment variable mechanism. The PET itself, however, becomes the *master* of the OpenMP thread team, and is not affected by `OMP_STACKSIZE`. It is the master's stack that can be sized via the `pthreadMinStackSize` argument, and a large enough size is often critical.

When `pthreadMinStackSize` is absent, the default is to use the system default set by the `limit` or `ulimit` command. However, the stack of a Pthread cannot be unlimited, and a shell *stacksize* setting of *unlimited*, or any setting below the ESMF implemented minimum, will result in setting the stack size to 20MiB (the ESMF minimum). Depending on how much private data is used by the user code under the master thread, the default might be too small, and `pthreadMinStackSize` must be used to allocate sufficient stack space.

[forceChildPthreads] For `.true.`, force each child PET to execute in its own Pthread. By default, `.false.`, single PETs spawned from a parent PET execute in the same thread (or MPI process) as the parent PET. Multiple child PETs spawned by the same parent PET always execute as their own Pthreads.

[rc] Return code; equals `ESMF_SUCCESS` if there are no errors.

17.4.27 ESMF_GridCompSetVMMinThreads - Set a reduced threading level in GridComp VM

INTERFACE:

```
subroutine ESMF_GridCompSetVMMinThreads(gridcomp, &
  maxPeCountPerPet, prefIntraProcess, prefIntraSsi, prefInterSsi, &
  pthreadMinStackSize, forceChildPthreads, rc)
```

ARGUMENTS:

```
  type(ESMF_GridComp), intent(inout)         :: gridcomp
-- The following arguments require argument keyword syntax (e.g. rc=rc). --
  integer,             intent(in),  optional :: maxPeCountPerPet
  integer,             intent(in),  optional :: prefIntraProcess
  integer,             intent(in),  optional :: prefIntraSsi
  integer,             intent(in),  optional :: prefInterSsi
  integer,             intent(in),  optional :: pthreadMinStackSize
  logical,             intent(in),  optional :: forceChildPthreads
  integer,             intent(out), optional :: rc
```

DESCRIPTION:

Set characteristics of the `ESMF_VM` for this `ESMF_GridComp`. Reduces the number of threaded PETs in each VAS. The `max` argument may be specified to limit the maximum number of PEs that a single PET can be associated with.

Several constraints apply: 1) the number of PEs cannot change, 2) PEs cannot migrate between single system images (SSIs), 3) the number of PETs cannot increase, only decrease, 4) PETs cannot migrate between virtual address spaces (VASs), nor can VASs migrate between SSIs.

The typical use of `ESMF_GridCompSetVMMinThreads()` is to run a Component across a set of single-threaded PETs.

The arguments are:

gridcomp `ESMF_GridComp` to set the `ESMF_VM` for.

[maxPeCountPerPet] Maximum number of PEs on each PET. Default for each SSI is the local number of PEs.

[prefIntraProcess] Communication preference within a single process. *Currently options not documented. Use default.*

[prefIntraSsi] Communication preference within a single system image (SSI). *Currently options not documented. Use default.*

[prefInterSsi] Communication preference between different single system images (SSIs). *Currently options not documented. Use default.*

[pthreadMinStackSize] Minimum stack size in byte of any child PET executing as Pthread. By default single threaded child PETs do *not* execute as Pthread, and their stack size is unaffected by this argument. However, for multi-threaded child PETs, or if `forceChildPthreads` is `.true.`, child PETs execute as Pthreads with their own private stack.

For cases where OpenMP threads are used by the user code, each thread allocates its own private stack. For all threads *other* than the master, the stack size is set via the typical `OMP_STACKSIZE` environment variable mechanism. The PET itself, however, becomes the *master* of the OpenMP thread team, and is not affected by `OMP_STACKSIZE`. It is the master's stack that can be sized via the `pthreadMinStackSize` argument, and a large enough size is often critical.

When `pthreadMinStackSize` is absent, the default is to use the system default set by the `limit` or `ulimit` command. However, the stack of a Pthread cannot be unlimited, and a shell *stacksize* setting of *unlimited*, or any setting below the ESMF implemented minimum, will result in setting the stack size to 20MiB (the ESMF minimum). Depending on how much private data is used by the user code under the master thread, the default might be too small, and `pthreadMinStackSize` must be used to allocate sufficient stack space.

[forceChildPthreads] For `.true.`, force each child PET to execute in its own Pthread. By default, `.false.`, single PETs spawned from a parent PET execute in the same thread (or MPI process) as the parent PET. Multiple child PETs spawned by the same parent PET always execute as their own Pthreads.

[rc] Return code; equals `ESMF_SUCCESS` if there are no errors.

17.4.28 ESMF_GridCompSetVMStdRedirect - Set stdout and stderr redirect in GridComp VM

INTERFACE:

```
subroutine ESMF_GridCompSetVMStdRedirect(gridcomp, &
  stdout, stderr, rc)
```

ARGUMENTS:

```
    type(ESMF_GridComp), intent(inout)         :: gridcomp
 -- The following arguments require argument keyword syntax (e.g. rc=rc). --
    character(*),        intent(in),  optional :: stdout
    character(*),        intent(in),  optional :: stderr
    integer,             intent(out), optional :: rc
```

DESCRIPTION:

Set stdout and stderr redirect in the `ESMF_VM` for this `ESMF_GridComp`.

The arguments are:

gridcomp `ESMF_GridComp` to set the `ESMF_VM` for.

[stdout] Filename for the stdout redirect. If found, the last occurance of the asterisk symbol `*` in `stdout` is treated as a wildcard and replaced by the local PET number. By default do not redirect.

[stderr] Filename for the stderr redirect. If found, the last occurance of the asterisk symbol `*` in `stderr` is treated as a wildcard and replaced by the local PET number. By default do not redirect.

[rc] Return code; equals `ESMF_SUCCESS` if there are no errors.

17.4.29 ESMF_GridCompValidate - Check validity of a GridComp

INTERFACE:

```
subroutine ESMF_GridCompValidate(gridcomp, rc)
```

ARGUMENTS:

```
    type(ESMF_GridComp), intent(in)            :: gridcomp
 -- The following arguments require argument keyword syntax (e.g. rc=rc). --
    integer,             intent(out), optional :: rc
```

STATUS:

- This interface is backward compatible with ESMF versions starting at 5.2.0r. If code using this interface compiles with any version of ESMF starting with 5.2.0r, then it will compile with the current version.

DESCRIPTION:

Currently all this method does is to check that the `gridcomp` was created.

The arguments are:

gridcomp `ESMF_GridComp` to validate.

[rc] Return code; equals `ESMF_SUCCESS` if there are no errors.

17.4.30 ESMF_GridCompWait - Wait for a GridComp to return

INTERFACE:

```
subroutine ESMF_GridCompWait(gridcomp, syncflag, &
  timeout, timeoutFlag, userRc, rc)
```

ARGUMENTS:

```
    type(ESMF_GridComp),  intent(inout)         :: gridcomp
-- The following arguments require argument keyword syntax (e.g. rc=rc). --
    type(ESMF_Sync_Flag), intent(in),  optional :: syncflag
    integer,              intent(in),  optional :: timeout
    logical,              intent(out), optional :: timeoutFlag
    integer,              intent(out), optional :: userRc
    integer,              intent(out), optional :: rc
```

STATUS:

- This interface is backward compatible with ESMF versions starting at 5.2.0r. If code using this interface compiles with any version of ESMF starting with 5.2.0r, then it will compile with the current version.
- This interface was modified since ESMF version 5.2.0r. The fact that code using this interface compiles with the current ESMF version does not guarantee that it compiles with previous versions of this interface. If user code compatibility with version 5.2.0r is desired then care must be taken to limit the use of this interface to features that were available in the 5.2.0r release.
  Changes made after the 5.2.0r release:

  5.3.0 Added argument `timeout`. Added argument `timeoutFlag`. The new arguments provide access to the fault-tolerant component features.

DESCRIPTION:

When executing asynchronously, wait for an `ESMF_GridComp` to return.

The arguments are:

gridcomp `ESMF_GridComp` to wait for.

[syncflag] Blocking behavior of this method call. See section 55.59 for a list of valid blocking options. Default option is `ESMF_SYNC_VASBLOCKING` which blocks PETs and their spawned off threads across each VAS but does not synchronize PETs that run in different VASs.

[timeout] The maximum period in seconds the actual component is allowed to execute a previously invoked component method before it must communicate back to the dual component. If the actual component does not communicate back in the specified time, a timeout condition is raised on the dual side (this side). The default is 3600, i.e. 1 hour. The `timeout` argument is only supported for connected dual components.

[timeoutFlag] Returns `.true.` if the timeout was reached, `.false.` otherwise. If `timeoutFlag` was *not* provided, a timeout condition will lead to a return code of `rc \= ESMF_SUCCESS`. Otherwise the return value of `timeoutFlag` is the sole indicator of a timeout condition.

[userRc] Return code set by `userRoutine` before returning.

[rc] Return code; equals `ESMF_SUCCESS` if there are no errors.

17.4.31 ESMF_GridCompWriteRestart - Call the GridComp's write restart routine

INTERFACE:

```
recursive subroutine ESMF_GridCompWriteRestart(gridcomp, &
  importState, exportState, clock, syncflag, phase, timeout, timeoutFlag, &
  userRc, rc)
```

ARGUMENTS:

```
  type(ESMF_GridComp),  intent(inout)           :: gridcomp
-- The following arguments require argument keyword syntax (e.g. rc=rc). --
  type(ESMF_State),     intent(inout), optional :: importState
  type(ESMF_State),     intent(inout), optional :: exportState
  type(ESMF_Clock),     intent(inout), optional :: clock
  type(ESMF_Sync_Flag), intent(in),    optional :: syncflag
  integer,              intent(in),    optional :: phase
  integer,              intent(in),    optional :: timeout
  logical,              intent(out),   optional :: timeoutFlag
  integer,              intent(out),   optional :: userRc
  integer,              intent(out),   optional :: rc
```

STATUS:

- This interface is backward compatible with ESMF versions starting at 5.2.0r. If code using this interface compiles with any version of ESMF starting with 5.2.0r, then it will compile with the current version.
- This interface was modified since ESMF version 5.2.0r. The fact that code using this interface compiles with the current ESMF version does not guarantee that it compiles with previous versions of this interface. If user code compatibility with version 5.2.0r is desired then care must be taken to limit the use of this interface to features that were available in the 5.2.0r release.
  Changes made after the 5.2.0r release:

  5.3.0 Added argument `timeout`. Added argument `timeoutFlag`. The new arguments provide access to the fault-tolerant component features.

DESCRIPTION:

Call the associated user write restart routine for an `ESMF_GridComp`.

The arguments are:

gridcomp `ESMF_GridComp` to call run routine for.

[importState] `ESMF_State` containing import data. If not present, a dummy argument will be passed to the user-supplied routine. The importState argument in the user code cannot be optional.

[exportState] `ESMF_State` containing export data. If not present, a dummy argument will be passed to the user-supplied routine. The exportState argument in the user code cannot be optional.

[clock] External `ESMF_Clock` for passing in time information. This is generally the parent component's clock, and will be treated as read-only by the child component. The child component can maintain a private clock for its own internal time computations. If not present, a dummy argument will be passed to the user-supplied routine. The clock argument in the user code cannot be optional.

[syncflag] Blocking behavior of this method call. See section 55.59 for a list of valid blocking options. Default option is `ESMF_SYNC_VASBLOCKING` which blocks PETs and their spawned off threads across each VAS but does not synchronize PETs that run in different VASs.

[phase] Component providers must document whether each of their routines are *single-phase* or *multi-phase*. Single-phase routines require only one invocation to complete their work. Multi-phase routines provide multiple subroutines to accomplish the work, accommodating components which must complete part of their work, return to the caller and allow other processing to occur, and then continue the original operation. For multiple-phase child components, this is the integer phase number to be invoked. For single-phase child components this argument is optional. The default is 1.

[timeout] The maximum period in seconds that this call will wait in communications with the actual component, before returning with a timeout condition. The default is 3600, i.e. 1 hour. The `timeout` argument is only supported for connected dual components.

[timeoutFlag] Returns `.true.` if the timeout was reached, `.false.` otherwise. If `timeoutFlag` was *not* provided, a timeout condition will lead to a return code of `rc \= ESMF_SUCCESS`. Otherwise the return value of `timeoutFlag` is the sole indicator of a timeout condition.

[userRc] Return code set by `userRoutine` before returning.

[rc] Return code; equals `ESMF_SUCCESS` if there are no errors.

18 CplComp Class

18.1 Description

In a large, multi-component application such as a weather forecasting or climate prediction system running within ESMF, physical domains and major system functions are represented as Gridded Components (see Section 17.1). A Coupler Component, or `ESMF_CplComp`, arranges and executes the data transformations between the Gridded Components. Ideally, Coupler Components should contain all the information about inter-component communication for an application. This enables the Gridded Components in the application to be used in multiple contexts; that is, used in different coupled configurations without changes to their source code. For example, the same atmosphere might in one case be coupled to an ocean in a hurricane prediction model, and to a data assimilation system for numerical weather prediction in another. A single Coupler Component can couple two or more Gridded Components.

Like Gridded Components, Coupler Components have two parts, one that is provided by the user and another that is part of the framework. The user-written portion of the software is the coupling code necessary for a particular exchange between Gridded Components. This portion of the Coupler Component code must be divided into separately callable initialize, run, and finalize methods. The interfaces for these methods are prescribed by ESMF.

The term "user-written" is somewhat misleading here, since within a Coupler Component the user can leverage ESMF infrastructure software for regridding, redistribution, lower-level communications, calendar management, and other functions. However, ESMF is unlikely to offer all the software necessary to customize a data transfer between Gridded

Components. For instance, ESMF does not currently offer tools for unit tranformations or time averaging operations, so users must manage those operations themselves.

The second part of a Coupler Component is the `ESMF_CplComp` derived type within ESMF. The user must create one of these types to represent a specific coupling function, such as the regular transfer of data between a data assimilation system and an atmospheric model. [2]

The user-written part of a Coupler Component is associated with an `ESMF_CplComp` derived type through a routine called `ESMF_SetServices()`. This is a routine that the user must write and declare public. Inside the `ESMF_SetServices()` routine the user must call `ESMF_SetEntryPoint()` methods that associate a standard ESMF operation with the name of the corresponding Fortran subroutine in their user code. For example, a user routine called "couplerInit" might be associated with the standard initialize routine in a Coupler Component.

18.2 Use and Examples

A Coupler Component manages the transformation of data between Components. It contains a list of State objects and the operations needed to make them compatible, including such things as regridding and unit conversion. Coupler Components are user-written, following prescribed ESMF interfaces and, wherever desired, using ESMF infrastructure tools.

18.2.1 Implement a user-code `SetServices` routine

Every `ESMF_CplComp` is required to provide and document a public set services routine. It can have any name, but must follow the declaration below: a subroutine which takes an `ESMF_CplComp` as the first argument, and an integer return code as the second. Both arguments are required and must *not* be declared as `optional`. If an intent is specified in the interface it must be `intent(inout)` for the first and `intent(out)` for the second argument.

The set services routine must call the ESMF method `ESMF_CplCompSetEntryPoint()` to register with the framework what user-code subroutines should be called to initialize, run, and finalize the component. There are additional routines which can be registered as well, for checkpoint and restart functions.

Note that the actual subroutines being registered do not have to be public to this module; only the set services routine itself must be available to be used by other code.

```
! Example Coupler Component
module ESMF_CouplerEx

! ESMF Framework module
use ESMF
implicit none
public CPL_SetServices

contains

subroutine CPL_SetServices(comp, rc)
  type(ESMF_CplComp)    :: comp   ! must not be optional
  integer, intent(out)  :: rc     ! must not be optional

  ! Set the entry points for standard ESMF Component methods
  call ESMF_CplCompSetEntryPoint(comp, ESMF_METHOD_INITIALIZE, &
                      userRoutine=CPL_Init, rc=rc)
```

[2] It is not necessary to create a Coupler Component for each individual data *transfer*.

```
  call ESMF_CplCompSetEntryPoint(comp, ESMF_METHOD_RUN, &
                     userRoutine=CPL_Run, rc=rc)
  call ESMF_CplCompSetEntryPoint(comp, ESMF_METHOD_FINALIZE, &
                     userRoutine=CPL_Final, rc=rc)

  rc = ESMF_SUCCESS
end subroutine
```

18.2.2 Implement a user-code `Initialize` routine

When a higher level component is ready to begin using an `ESMF_CplComp`, it will call its initialize routine.

The component writer must supply a subroutine with the exact interface shown below. Arguments must not be declared as optional, and the types and order must match.

At initialization time the component can allocate data space, open data files, set up initial conditions; anything it needs to do to prepare to run.

The `rc` return code should be set if an error occurs, otherwise the value `ESMF_SUCCESS` should be returned.

```
subroutine CPL_Init(comp, importState, exportState, clock, rc)
  type(ESMF_CplComp)    :: comp               ! must not be optional
  type(ESMF_State)      :: importState        ! must not be optional
  type(ESMF_State)      :: exportState        ! must not be optional
  type(ESMF_Clock)      :: clock              ! must not be optional
  integer, intent(out)  :: rc                 ! must not be optional

  print *, "Coupler Init starting"

  ! Add whatever code here needed
  ! Precompute any needed values, fill in any inital values
  !  needed in Import States

  rc = ESMF_SUCCESS

  print *, "Coupler Init returning"

end subroutine CPL_Init
```

18.2.3 Implement a user-code `Run` routine

During the execution loop, the run routine may be called many times. Each time it should read data from the `importState`, use the `clock` to determine what the current time is in the calling component, compute new values or process the data, and produce any output and place it in the `exportState`.

When a higher level component is ready to use the `ESMF_CplComp` it will call its run routine.

The component writer must supply a subroutine with the exact interface shown below. Arguments must not be declared as optional, and the types and order must match.

It is expected that this is where the bulk of the model computation or data analysis will occur.

The `rc` return code should be set if an error occurs, otherwise the value `ESMF_SUCCESS` should be returned.

```
subroutine CPL_Run(comp, importState, exportState, clock, rc)
  type(ESMF_CplComp)    :: comp              ! must not be optional
  type(ESMF_State)      :: importState       ! must not be optional
  type(ESMF_State)      :: exportState       ! must not be optional
  type(ESMF_Clock)      :: clock             ! must not be optional
  integer, intent(out)  :: rc                ! must not be optional

  print *, "Coupler Run starting"

  ! Add whatever code needed here to transform Export state data
  !  into Import states for the next timestep.

  rc = ESMF_SUCCESS

  print *, "Coupler Run returning"

end subroutine CPL_Run
```

18.2.4 Implement a user-code `Finalize` routine

At the end of application execution, each `ESMF_CplComp` should deallocate data space, close open files, and flush final results. These functions should be placed in a finalize routine.

The component writer must supply a subroutine with the exact interface shown below. Arguments must not be declared as optional, and the types and order must match.

The `rc` return code should be set if an error occurs, otherwise the value `ESMF_SUCCESS` should be returned.

```
subroutine CPL_Final(comp, importState, exportState, clock, rc)
  type(ESMF_CplComp)    :: comp                ! must not be optional
  type(ESMF_State)      :: importState         ! must not be optional
  type(ESMF_State)      :: exportState         ! must not be optional
  type(ESMF_Clock)      :: clock               ! must not be optional
  integer, intent(out)  :: rc                  ! must not be optional

  print *, "Coupler Final starting"

  ! Add whatever code needed here to compute final values and
  !  finish the computation.

  rc = ESMF_SUCCESS

  print *, "Coupler Final returning"

end subroutine CPL_Final
```

18.2.5 Implement a user-code `SetVM` routine

Every `ESMF_CplComp` can optionally provide and document a public set vm routine. It can have any name, but must follow the declaration below: a subroutine which takes an `ESMF_CplComp` as the first argument, and an integer return code as the second. Both arguments are required and must *not* be declared as `optional`. If an intent is specified in the interface it must be `intent(inout)` for the first and `intent(out)` for the second argument.

The set vm routine is the only place where the child component can use the `ESMF_CplCompSetVMMaxPEs()`, or `ESMF_CplCompSetVMMaxThreads()`, or `ESMF_CplCompSetVMMinThreads()` call to modify aspects of its own VM.

A component's VM is started up right before its set services routine is entered. `ESMF_CplCompSetVM()` is executing in the parent VM, and must be called *before* `ESMF_CplCompSetServices()`.

```
subroutine GComp_SetVM(comp, rc)
  type(ESMF_CplComp)   :: comp   ! must not be optional
  integer, intent(out)  :: rc     ! must not be optional

  type(ESMF_VM) :: vm
  logical :: pthreadsEnabled

  ! Test for Pthread support, all SetVM calls require it
  call ESMF_VMGetGlobal(vm, rc=rc)
  call ESMF_VMGet(vm, pthreadsEnabledFlag=pthreadsEnabled, rc=rc)

  if (pthreadsEnabled) then
    ! run PETs single-threaded
    call ESMF_CplCompSetVMMinThreads(comp, rc=rc)
  endif

  rc = ESMF_SUCCESS

end subroutine

end module ESMF_CouplerEx
```

18.3 Restrictions and Future Work

1. **No optional arguments.** User-written routines called by SetServices, and registered for Initialize, Run and Finalize, *must not* declare any of the arguments as optional.

2. **No Transforms.** Components must exchange data through `ESMF_State` objects. The input data are available at the time the component code is called, and data to be returned to another component are available when that code returns.

3. **No automatic unit conversions.** The ESMF framework does not currently contain tools for performing unit conversions, operations that are fairly standard within Coupler Components.

4. **No accumulator.** The ESMF does not have an accumulator tool, to perform time averaging of fields for coupling. This is likely to be developed in the near term.

18.4 Class API

18.4.1 ESMF_CplCompAssignment(=) - CplComp assignment

INTERFACE:

```
interface assignment(=)
cplcomp1 = cplcomp2
```

ARGUMENTS:

```
type(ESMF_CplComp) :: cplcomp1
type(ESMF_CplComp) :: cplcomp2
```

STATUS:

- This interface is backward compatible with ESMF versions starting at 5.2.0r. If code using this interface compiles with any version of ESMF starting with 5.2.0r, then it will compile with the current version.

DESCRIPTION:

Assign cplcomp1 as an alias to the same ESMF CplComp object in memory as cplcomp2. If cplcomp2 is invalid, then cplcomp1 will be equally invalid after the assignment.

The arguments are:

cplcomp1 The `ESMF_CplComp` object on the left hand side of the assignment.

cplcomp2 The `ESMF_CplComp` object on the right hand side of the assignment.

18.4.2 ESMF_CplCompOperator(==) - CplComp equality operator

INTERFACE:

```
interface operator(==)
  if (cplcomp1 == cplcomp2) then ... endif
            OR
  result = (cplcomp1 == cplcomp2)
```

RETURN VALUE:

```
logical :: result
```

ARGUMENTS:

```
type(ESMF_CplComp), intent(in) :: cplcomp1
type(ESMF_CplComp), intent(in) :: cplcomp2
```

STATUS:

- This interface is backward compatible with ESMF versions starting at 5.2.0r. If code using this interface compiles with any version of ESMF starting with 5.2.0r, then it will compile with the current version.

DESCRIPTION:

Test whether cplcomp1 and cplcomp2 are valid aliases to the same ESMF CplComp object in memory. For a more general comparison of two ESMF CplComps, going beyond the simple alias test, the ESMF_CplCompMatch() function (not yet implemented) must be used.

The arguments are:

cplcomp1 The `ESMF_CplComp` object on the left hand side of the equality operation.

cplcomp2 The `ESMF_CplComp` object on the right hand side of the equality operation.

18.4.3 ESMF_CplCompOperator(/=) - CplComp not equal operator

INTERFACE:

```
interface operator(/=)
  if (cplcomp1 /= cplcomp2) then ... endif
            OR
  result = (cplcomp1 /= cplcomp2)
```

RETURN VALUE:

```
logical :: result
```

ARGUMENTS:

```
type(ESMF_CplComp), intent(in) :: cplcomp1
type(ESMF_CplComp), intent(in) :: cplcomp2
```

STATUS:

- This interface is backward compatible with ESMF versions starting at 5.2.0r. If code using this interface compiles with any version of ESMF starting with 5.2.0r, then it will compile with the current version.

DESCRIPTION:

Test whether cplcomp1 and cplcomp2 are *not* valid aliases to the same ESMF CplComp object in memory. For a more general comparison of two ESMF CplComps, going beyond the simple alias test, the ESMF_CplCompMatch() function (not yet implemented) must be used.

The arguments are:

cplcomp1 The `ESMF_CplComp` object on the left hand side of the non-equality operation.

cplcomp2 The `ESMF_CplComp` object on the right hand side of the non-equality operation.

18.4.4 ESMF_CplCompCreate - Create a CplComp

INTERFACE:

```
recursive function ESMF_CplCompCreate(hconfig, config, &
  configFile, clock, petList, devList, contextflag, name, rc)
```

RETURN VALUE:

```
type(ESMF_CplComp) :: ESMF_CplCompCreate
```

ARGUMENTS:

```
-- The following arguments require argument keyword syntax (e.g. rc=rc). --
    type(ESMF_HConfig),      intent(in),  optional :: hconfig
    type(ESMF_Config),       intent(in),  optional :: config
    character(len=*),        intent(in),  optional :: configFile
    type(ESMF_Clock),        intent(in),  optional :: clock
    integer,                 intent(in),  optional :: petList(:)
    integer,                 intent(in),  optional :: devList(:)
    type(ESMF_Context_Flag), intent(in),  optional :: contextflag
    character(len=*),        intent(in),  optional :: name
    integer,                 intent(out), optional :: rc
```

STATUS:

- This interface is backward compatible with ESMF versions starting at 5.2.0r. If code using this interface compiles with any version of ESMF starting with 5.2.0r, then it will compile with the current version.
- This interface was modified since ESMF version 5.2.0r. The fact that code using this interface compiles with the current ESMF version does not guarantee that it compiles with previous versions of this interface. If user code compatibility with version 5.2.0r is desired then care must be taken to limit the use of this interface to features that were available in the 5.2.0r release.
  Changes made after the 5.2.0r release:

  8.6.0 Added argument `devList` to support management of accelerator devices.

  8.7.0 Added argument `hconfig` to simplify direct usage of `ESMF_HConfig` objects with Components.

DESCRIPTION:

This interface creates an `ESMF_CplComp` object. By default, a separate VM context will be created for each component. This implies creating a new MPI communicator and allocating additional memory to manage the VM resources. When running on a large number of processors, creating a separate VM for each component could be both time and memory inefficient. If the application is sequential, i.e., each component is running on all the PETs of the global VM, it

will be more efficient to use the global VM instead of creating a new one. This can be done by setting `contextflag` to ESMF_CONTEXT_PARENT_VM.

The return value is the new `ESMF_CplComp`.

The arguments are:

[hconfig] An already-created `ESMF_HConfig` object to be attached to the newly created component. Only one of `hconfig`, `config`, or `configFile` must be specified.

[config] An already-created `ESMF_Config` object to be attached to the newly created component. Only one of `hconfig`, `config`, or `configFile` must be specified.

[configFile] The filename of a config file. If specified, a new `ESMF_Config` object is created and attached to the newly created component. The `configFile` file is opened and associated with the new config object. Only one of `hconfig`, `config`, or `configFile` must be specified.

[clock] The `ESMF_Clock` object associated with the component. Often this will be a component specific clock that can be queried and updated by the component freely. In that case it should be a clock object separate from that of other components, particularily that of the parent component. However, ESMF itself does not access or update `clock` and therefore does not impose any direct restrictions. It is the user's responsibility to ensure correct usage of the `clock` object by the parent and child components.

[petList] List of parent `PET`s given to the created child component by the parent component. If `petList` is not specified, or is empty, all of the parent `PET`s are given to the child component. The order of PETs in `petList` determines how the child local PETs map back to the parent PETs.

[devList] List of accelerator devices global ids `DEV`s to be associated with the created child component. If `devList` is not specified, or is empty, no devices are associated with the component.

[contextflag] Specify the component's VM context. The default context is `ESMF_CONTEXT_OWN_VM`. See section 55.10 for a complete list of valid flags.

[name] Name of the newly-created `ESMF_CplComp`. This name can be altered from within the `ESMF_CplComp` code once the initialization routine is called.

[rc] Return code; equals `ESMF_SUCCESS` if there are no errors.

18.4.5 ESMF_CplCompDestroy - Release resources associated with a CplComp

INTERFACE:

```
recursive subroutine ESMF_CplCompDestroy(cplcomp, &
  timeout, timeoutFlag, rc)
```

ARGUMENTS:

```
  type(ESMF_CplComp), intent(inout)          :: cplcomp
-- The following arguments require argument keyword syntax (e.g. rc=rc). --
  integer,            intent(in),   optional :: timeout
  logical,            intent(out),  optional :: timeoutFlag
  integer,            intent(out),  optional :: rc
```

STATUS:

- This interface is backward compatible with ESMF versions starting at 5.2.0r. If code using this interface compiles with any version of ESMF starting with 5.2.0r, then it will compile with the current version.
- This interface was modified since ESMF version 5.2.0r. The fact that code using this interface compiles with the current ESMF version does not guarantee that it compiles with previous versions of this interface. If user code compatibility with version 5.2.0r is desired then care must be taken to limit the use of this interface to features that were available in the 5.2.0r release.
  Changes made after the 5.2.0r release:

  5.3.0 Added argument `timeout`. Added argument `timeoutFlag`. The new arguments provide access to the fault-tolerant component features.

DESCRIPTION:

Destroys an `ESMF_CplComp`, releasing the resources associated with the object.

The arguments are:

cplcomp Release all resources associated with this `ESMF_CplComp` and mark the object as invalid. It is an error to pass this object into any other routines after being destroyed.

[timeout] The maximum period in seconds that this call will wait in communications with the actual component, before returning with a timeout condition. The default is 3600, i.e. 1 hour. The `timeout` argument is only supported for connected dual components.

[timeoutFlag] Returns `.true.` if the timeout was reached, `.false.` otherwise. If `timeoutFlag` was *not* provided, a timeout condition will lead to a return code of `rc \= ESMF_SUCCESS`. Otherwise the return value of `timeoutFlag` is the sole indicator of a timeout condition.

[rc] Return code; equals `ESMF_SUCCESS` if there are no errors.

18.4.6 ESMF_CplCompFinalize - Call the CplComp's finalize routine

INTERFACE:

```
recursive subroutine ESMF_CplCompFinalize(cplcomp, &
  importState, exportState, clock, syncflag, phase, timeout, timeoutFlag, &
  userRc, rc)
```

ARGUMENTS:

```
    type(ESMF_CplComp),   intent(inout)           :: cplcomp
-- The following arguments require argument keyword syntax (e.g. rc=rc). --
    type(ESMF_State),     intent(inout), optional :: importState
    type(ESMF_State),     intent(inout), optional :: exportState
    type(ESMF_Clock),     intent(inout), optional :: clock
    type(ESMF_Sync_Flag), intent(in),    optional :: syncflag
    integer,              intent(in),    optional :: phase
    integer,              intent(in),    optional :: timeout
```

```
logical,              intent(out),   optional :: timeoutFlag
integer,              intent(out),   optional :: userRc
integer,              intent(out),   optional :: rc
```

STATUS:

- This interface is backward compatible with ESMF versions starting at 5.2.0r. If code using this interface compiles with any version of ESMF starting with 5.2.0r, then it will compile with the current version.
- This interface was modified since ESMF version 5.2.0r. The fact that code using this interface compiles with the current ESMF version does not guarantee that it compiles with previous versions of this interface. If user code compatibility with version 5.2.0r is desired then care must be taken to limit the use of this interface to features that were available in the 5.2.0r release.
  Changes made after the 5.2.0r release:

  5.3.0 Added argument `timeout`. Added argument `timeoutFlag`. The new arguments provide access to the fault-tolerant component features.

DESCRIPTION:

Call the associated user-supplied finalization routine for an `ESMF_CplComp`.

The arguments are:

cplcomp The `ESMF_CplComp` to call finalize routine for.

[importState] `ESMF_State` containing import data for coupling. If not present, a dummy argument will be passed to the user-supplied routine. The importState argument in the user code cannot be optional.

[exportState] `ESMF_State` containing export data for coupling. If not present, a dummy argument will be passed to the user-supplied routine. The exportState argument in the user code cannot be optional.

[clock] External `ESMF_Clock` for passing in time information. This is generally the parent component's clock, and will be treated as read-only by the child component. The child component can maintain a private clock for its own internal time computations. If not present, a dummy argument will be passed to the user-supplied routine. The clock argument in the user code cannot be optional.

[syncflag] Blocking behavior of this method call. See section 55.59 for a list of valid blocking options. Default option is `ESMF_SYNC_VASBLOCKING` which blocks PETs and their spawned off threads across each VAS but does not synchronize PETs that run in different VASs.

[phase] Component providers must document whether each of their routines are *single-phase* or *multi-phase*. Single-phase routines require only one invocation to complete their work. Multi-phase routines provide multiple subroutines to accomplish the work, accommodating components which must complete part of their work, return to the caller and allow other processing to occur, and then continue the original operation. For multiple-phase child components, this is the integer phase number to be invoked. For single-phase child components this argument is optional. The default is 1.

[timeout] The maximum period in seconds that this call will wait in communications with the actual component, before returning with a timeout condition. The default is 3600, i.e. 1 hour. The `timeout` argument is only supported for connected dual components.

[timeoutFlag] Returns `.true.` if the timeout was reached, `.false.` otherwise. If `timeoutFlag` was *not* provided, a timeout condition will lead to a return code of `rc \= ESMF_SUCCESS`. Otherwise the return value of `timeoutFlag` is the sole indicator of a timeout condition.

[userRc] Return code set by `userRoutine` before returning.

[rc] Return code; equals `ESMF_SUCCESS` if there are no errors.

18.4.7 ESMF_CplCompGet - Get CplComp information

INTERFACE:

```
subroutine ESMF_CplCompGet(cplcomp, hconfigIsPresent, hconfig, &
  configIsPresent, config, configFileIsPresent, configFile, clockIsPresent, clock, local
  petCount, contextflag, currentMethod, currentPhase, vmIsPresent, &
  vm, name, rc)
```

ARGUMENTS:

```
  type(ESMF_CplComp),      intent(in)            :: cplcomp
-- The following arguments require argument keyword syntax (e.g. rc=rc). --
  logical,                 intent(out), optional :: hconfigIsPresent
  type(ESMF_HConfig),      intent(out), optional :: hconfig
  logical,                 intent(out), optional :: configIsPresent
  type(ESMF_Config),       intent(out), optional :: config
  logical,                 intent(out), optional :: configFileIsPresent
  character(len=*),        intent(out), optional :: configFile
  logical,                 intent(out), optional :: clockIsPresent
  type(ESMF_Clock),        intent(out), optional :: clock
  integer,                 intent(out), optional :: localPet
  integer,                 intent(out), optional :: petCount
  type(ESMF_Context_Flag), intent(out), optional :: contextflag
  type(ESMF_Method_Flag),  intent(out), optional :: currentMethod
  integer,                 intent(out), optional :: currentPhase
  logical,                 intent(out), optional :: vmIsPresent
  type(ESMF_VM),           intent(out), optional :: vm
  character(len=*),        intent(out), optional :: name
  integer,                 intent(out), optional :: rc
```

STATUS:

- This interface is backward compatible with ESMF versions starting at 5.2.0r. If code using this interface compiles with any version of ESMF starting with 5.2.0r, then it will compile with the current version.
- This interface was modified since ESMF version 5.2.0r. The fact that code using this interface compiles with the current ESMF version does not guarantee that it compiles with previous versions of this interface. If user code compatibility with version 5.2.0r is desired then care must be taken to limit the use of this interface to features that were available in the 5.2.0r release.
  Changes made after the 5.2.0r release:

  8.7.0 Added arguments `hconfigIsPresent` and `hconfig` to simplify direct usage of `ESMF_HConfig` objects with Components.

DESCRIPTION:

Get information about an `ESMF_CplComp` object.

The arguments are:

cplcomp The `ESMF_CplComp` object being queried.

[configIsPresent] `.true.` if `config` was set in CplComp object, `.false.` otherwise.

[hconfigIsPresent] `.true.` if `hconfig` is available in the CplComp object, `.false.` otherwise.

[hconfig] Return the associated HConfig object. It is an error to query for the HConfig object if none is associated with the CplComp. If unsure, get `hconfigIsPresent` first to determine the status.

[configIsPresent] `.true.` if `config` is available in the CplComp object, `.false.` otherwise.

[config] Return the associated Config object. It is an error to query for the Config if none is associated with the CplComp. If unsure, get `configIsPresent` first to determine the status.

[configFileIsPresent] `.true.` if `configFile` is available in the CplComp object, `.false.` otherwise.

[configFile] Return the associated configuration filename. It is an error to query for the configuration filename if none is associated with the CplComp. If unsure, get `configFileIsPresent` first to determine the status.

[clockIsPresent] `.true.` if `clock` was set in CplComp object, `.false.` otherwise.

[clock] Return the associated Clock. It is an error to query for the Clock if none is associated with the CplComp. If unsure, get `clockIsPresent` first to determine the status.

[localPet] Return the local PET id within the `ESMF_CplComp` object.

[petCount] Return the number of PETs in the the `ESMF_CplComp` object.

[contextflag] Return the `ESMF_Context_Flag` for this `ESMF_CplComp`. See section 55.10 for a complete list of valid flags.

[currentMethod] Return the current `ESMF_Method_Flag` of the `ESMF_CplComp` execution. See section 55.44 for a complete list of valid options.

[currentPhase] Return the current `phase` of the `ESMF_CplComp` execution.

[vmIsPresent] `.true.` if `vm` was set in CplComp object, `.false.` otherwise.

[vm] Return the associated VM. It is an error to query for the VM if none is associated with the CplComp. If unsure, get `vmIsPresent` first to determine the status.

[name] Return the name of the `ESMF_CplComp`.

[rc] Return code; equals `ESMF_SUCCESS` if there are no errors.

18.4.8 ESMF_CplCompGetInternalState - Get private data block pointer - (DEPRECATED METHOD)

INTERFACE:

```
subroutine ESMF_CplCompGetInternalState(cplcomp, wrappedDataPointer, rc)
```

ARGUMENTS:

```
type(ESMF_CplComp)              :: cplcomp
type(wrapper)                   :: wrappedDataPointer
integer,            intent(out) :: rc
```

STATUS:

- This interface is backward compatible with ESMF versions starting at 5.2.0r. If code using this interface compiles with any version of ESMF starting with 5.2.0r, then it will compile with the current version.
- **DEPRECATED METHOD** as of ESMF 8.9.0. Please use `ESMF_InternalStateGet`, section `22.4.3` instead.

DESCRIPTION:

Available to be called by an `ESMF_CplComp` at any time after `ESMF_CplCompSetInternalState` has been called. Since init, run, and finalize must be separate subroutines, data that they need to share in common can either be module global data, or can be allocated in a private data block and the address of that block can be registered with the framework and retrieved by this call. When running multiple instantiations of an `ESMF_CplComp`, for example during ensemble runs, it may be simpler to maintain private data specific to each run with private data blocks. A corresponding `ESMF_CplCompSetInternalState` call sets the data pointer to this block, and this call retrieves the data pointer. Note that the `wrappedDataPointer` argument needs to be a derived type which contains only a pointer of the type of the data block defined by the user. When making this call the pointer needs to be unassociated. When the call returns, the pointer will now reference the original data block which was set during the previous call to `ESMF_CplCompSetInternalState`.

Only the *last* data block set via `ESMF_CplCompSetInternalState` will be accessible.

CAUTION: If you are working with a compiler that does not support Fortran 2018 assumed-type dummy arguments, then this method does not have an explicit Fortran interface. In this case do not specify argument keywords when calling this method!

The arguments are:

cplcomp An `ESMF_CplComp` object.

wrappedDataPointer A derived type (wrapper), containing only an unassociated pointer to the private data block. The framework will fill in the pointer. When this call returns, the pointer is set to the same address set during the last `ESMF_CplCompSetInternalState` call. This level of indirection is needed to reliably set and retrieve the data block no matter which architecture or compiler is used.

rc Return code; equals `ESMF_SUCCESS` if there are no errors. Note: unlike most other ESMF routines, this argument is not optional because of implementation considerations.

18.4.9 ESMF_CplCompInitialize - Call the CplComp's initialize routine

INTERFACE:

```
recursive subroutine ESMF_CplCompInitialize(cplcomp, &
  importState, exportState, clock, syncflag, phase, timeout, timeoutFlag, &
  userRc, rc)
```

ARGUMENTS:

```
  type(ESMF_CplComp),   intent(inout)           :: cplcomp
-- The following arguments require argument keyword syntax (e.g. rc=rc). --
```

```
type(ESMF_State),     intent(inout), optional :: importState
type(ESMF_State),     intent(inout), optional :: exportState
type(ESMF_Clock),     intent(inout), optional :: clock
type(ESMF_Sync_Flag), intent(in),    optional :: syncflag
integer,              intent(in),    optional :: phase
integer,              intent(in),    optional :: timeout
logical,              intent(out),   optional :: timeoutFlag
integer,              intent(out),   optional :: userRc
integer,              intent(out),   optional :: rc
```

STATUS:

- This interface is backward compatible with ESMF versions starting at 5.2.0r. If code using this interface compiles with any version of ESMF starting with 5.2.0r, then it will compile with the current version.
- This interface was modified since ESMF version 5.2.0r. The fact that code using this interface compiles with the current ESMF version does not guarantee that it compiles with previous versions of this interface. If user code compatibility with version 5.2.0r is desired then care must be taken to limit the use of this interface to features that were available in the 5.2.0r release.
  Changes made after the 5.2.0r release:

  5.3.0 Added argument `timeout`. Added argument `timeoutFlag`. The new arguments provide access to the fault-tolerant component features.

DESCRIPTION:

Call the associated user initialization routine for an `ESMF_CplComp`.

The arguments are:

cplcomp `ESMF_CplComp` to call initialize routine for.

[importState] `ESMF_State` containing import data for coupling. If not present, a dummy argument will be passed to the user-supplied routine. The importState argument in the user code cannot be optional.

[exportState] `ESMF_State` containing export data for coupling. If not present, a dummy argument will be passed to the user-supplied routine. The exportState argument in the user code cannot be optional.

[clock] External `ESMF_Clock` for passing in time information. This is generally the parent component's clock, and will be treated as read-only by the child component. The child component can maintain a private clock for its own internal time computations. If not present, a dummy argument will be passed to the user-supplied routine. The clock argument in the user code cannot be optional.

[syncflag] Blocking behavior of this method call. See section 55.59 for a list of valid blocking options. Default option is `ESMF_SYNC_VASBLOCKING` which blocks PETs and their spawned off threads across each VAS but does not synchronize PETs that run in different VASs.

[phase] Component providers must document whether each of their routines are *single-phase* or *multi-phase*. Single-phase routines require only one invocation to complete their work. Multi-phase routines provide multiple subroutines to accomplish the work, accommodating components which must complete part of their work, return to the caller and allow other processing to occur, and then continue the original operation. For multiple-phase child components, this is the integer phase number to be invoked. For single-phase child components this argument is optional. The default is 1.

[timeout] The maximum period in seconds that this call will wait in communications with the actual component, before returning with a timeout condition. The default is 3600, i.e. 1 hour. The `timeout` argument is only supported for connected dual components.

[timeoutFlag] Returns `.true.` if the timeout was reached, `.false.` otherwise. If `timeoutFlag` was *not* provided, a timeout condition will lead to a return code of `rc \= ESMF_SUCCESS`. Otherwise the return value of `timeoutFlag` is the sole indicator of a timeout condition.

[userRc] Return code set by `userRoutine` before returning.

[rc] Return code; equals `ESMF_SUCCESS` if there are no errors.

18.4.10 ESMF_CplCompIsCreated - Check whether a CplComp object has been created

INTERFACE:

```
function ESMF_CplCompIsCreated(cplcomp, rc)
```

RETURN VALUE:

```
logical :: ESMF_CplCompIsCreated
```

ARGUMENTS:

```
     type(ESMF_CplComp), intent(in)            :: cplcomp
 -- The following arguments require argument keyword syntax (e.g. rc=rc). --
     integer,             intent(out), optional :: rc
```

DESCRIPTION:

Return `.true.` if the `cplcomp` has been created. Otherwise return `.false.`. If an error occurs, i.e. `rc /= ESMF_SUCCESS` is returned, the return value of the function will also be `.false.`.

The arguments are:

cplcomp `ESMF_CplComp` queried.

[rc] Return code; equals `ESMF_SUCCESS` if there are no errors.

18.4.11 ESMF_CplCompIsPetLocal - Inquire if this CplComp is to execute on the calling PET

INTERFACE:

```
recursive function ESMF_CplCompIsPetLocal(cplcomp, rc)
```

RETURN VALUE:

```
logical :: ESMF_CplCompIsPetLocal
```

ARGUMENTS:

```
     type(ESMF_CplComp), intent(in)            :: cplcomp
 -- The following arguments require argument keyword syntax (e.g. rc=rc). --
     integer,            intent(out), optional :: rc
```

STATUS:

- This interface is backward compatible with ESMF versions starting at 5.2.0r. If code using this interface compiles with any version of ESMF starting with 5.2.0r, then it will compile with the current version.

DESCRIPTION:

Inquire if this `ESMF_CplComp` object is to execute on the calling PET.

The return value is `.true.` if the component is to execute on the calling PET, `.false.` otherwise.

The arguments are:

cplcomp `ESMF_CplComp` queried.

[rc] Return code; equals `ESMF_SUCCESS` if there are no errors.

18.4.12 ESMF_CplCompPrint - Print CplComp information

INTERFACE:

```
   subroutine ESMF_CplCompPrint(cplcomp, rc)
```

ARGUMENTS:

```
     type(ESMF_CplComp), intent(in)            :: cplcomp
 -- The following arguments require argument keyword syntax (e.g. rc=rc). --
     integer,            intent(out), optional :: rc
```

STATUS:

- This interface is backward compatible with ESMF versions starting at 5.2.0r. If code using this interface compiles with any version of ESMF starting with 5.2.0r, then it will compile with the current version.

DESCRIPTION:

Prints information about an `ESMF_CplComp` to `stdout`.

The arguments are:

cplcomp `ESMF_CplComp` to print.

[rc] Return code; equals `ESMF_SUCCESS` if there are no errors.

18.4.13 ESMF_CplCompReadRestart – Call the CplComp's read restart routine

INTERFACE:

```
recursive subroutine ESMF_CplCompReadRestart(cplcomp, &
  importState, exportState, clock, syncflag, phase, timeout, timeoutFlag, &
  userRc, rc)
```

ARGUMENTS:

```
    type(ESMF_CplComp),   intent(inout)           :: cplcomp
-- The following arguments require argument keyword syntax (e.g. rc=rc). --
    type(ESMF_State),     intent(inout), optional :: importState
    type(ESMF_State),     intent(inout), optional :: exportState
    type(ESMF_Clock),     intent(inout), optional :: clock
    type(ESMF_Sync_Flag), intent(in),    optional :: syncflag
    integer,              intent(in),    optional :: phase
    integer,              intent(in),    optional :: timeout
    logical,              intent(out),   optional :: timeoutFlag
    integer,              intent(out),   optional :: userRc
    integer,              intent(out),   optional :: rc
```

STATUS:

- This interface is backward compatible with ESMF versions starting at 5.2.0r. If code using this interface compiles with any version of ESMF starting with 5.2.0r, then it will compile with the current version.
- This interface was modified since ESMF version 5.2.0r. The fact that code using this interface compiles with the current ESMF version does not guarantee that it compiles with previous versions of this interface. If user code compatibility with version 5.2.0r is desired then care must be taken to limit the use of this interface to features that were available in the 5.2.0r release.
  Changes made after the 5.2.0r release:

  5.3.0 Added argument `timeout`. Added argument `timeoutFlag`. The new arguments provide access to the fault-tolerant component features.

DESCRIPTION:

Call the associated user read restart routine for an `ESMF_CplComp`.

The arguments are:

cplcomp `ESMF_CplComp` to call run routine for.

[importState] `ESMF_State` containing import data. If not present, a dummy argument will be passed to the user-supplied routine. The importState argument in the user code cannot be optional.

[exportState] `ESMF_State` containing export data. If not present, a dummy argument will be passed to the user-supplied routine. The exportState argument in the user code cannot be optional.

[clock] External `ESMF_Clock` for passing in time information. This is generally the parent component's clock, and will be treated as read-only by the child component. The child component can maintain a private clock for its own internal time computations. If not present, a dummy argument will be passed to the user-supplied routine. The clock argument in the user code cannot be optional.

[syncflag] Blocking behavior of this method call. See section 55.59 for a list of valid blocking options. Default option is `ESMF_SYNC_VASBLOCKING` which blocks PETs and their spawned off threads across each VAS but does not synchronize PETs that run in different VASs.

[phase] Component providers must document whether each of their routines are *single-phase* or *multi-phase*. Single-phase routines require only one invocation to complete their work. Multi-phase routines provide multiple subroutines to accomplish the work, accommodating components which must complete part of their work, return to the caller and allow other processing to occur, and then continue the original operation. For multiple-phase child components, this is the integer phase number to be invoked. For single-phase child components this argument is optional. The default is 1.

[timeout] The maximum period in seconds that this call will wait in communications with the actual component, before returning with a timeout condition. The default is 3600, i.e. 1 hour. The `timeout` argument is only supported for connected dual components.

[timeoutFlag] Returns `.true.` if the timeout was reached, `.false.` otherwise. If `timeoutFlag` was *not* provided, a timeout condition will lead to a return code of `rc \= ESMF_SUCCESS`. Otherwise the return value of `timeoutFlag` is the sole indicator of a timeout condition.

[userRc] Return code set by `userRoutine` before returning.

[rc] Return code; equals `ESMF_SUCCESS` if there are no errors.

18.4.14 ESMF_CplCompRun - Call the CplComp's run routine

INTERFACE:

```
recursive subroutine ESMF_CplCompRun(cplcomp, &
  importState, exportState, clock, syncflag, phase, timeout, timeoutFlag, &
  userRc, rc)
```

ARGUMENTS:

```
    type(ESMF_CplComp),   intent(inout)           :: cplcomp
-- The following arguments require argument keyword syntax (e.g. rc=rc). --
    type(ESMF_State),     intent(inout), optional :: importState
    type(ESMF_State),     intent(inout), optional :: exportState
    type(ESMF_Clock),     intent(inout), optional :: clock
    type(ESMF_Sync_Flag), intent(in),    optional :: syncflag
    integer,              intent(in),    optional :: phase
    integer,              intent(in),    optional :: timeout
    logical,              intent(out),   optional :: timeoutFlag
    integer,              intent(out),   optional :: userRc
    integer,              intent(out),   optional :: rc
```

STATUS:

- This interface is backward compatible with ESMF versions starting at 5.2.0r. If code using this interface compiles with any version of ESMF starting with 5.2.0r, then it will compile with the current version.

- This interface was modified since ESMF version 5.2.0r. The fact that code using this interface compiles with the current ESMF version does not guarantee that it compiles with previous versions of this interface. If user code compatibility with version 5.2.0r is desired then care must be taken to limit the use of this interface to features that were available in the 5.2.0r release.
  Changes made after the 5.2.0r release:

  5.3.0 Added argument `timeout`. Added argument `timeoutFlag`. The new arguments provide access to the fault-tolerant component features.

DESCRIPTION:

Call the associated user run routine for an `ESMF_CplComp`.

The arguments are:

cplcomp `ESMF_CplComp` to call run routine for.

[importState] `ESMF_State` containing import data for coupling. If not present, a dummy argument will be passed to the user-supplied routine. The importState argument in the user code cannot be optional.

[exportState] `ESMF_State` containing export data for coupling. If not present, a dummy argument will be passed to the user-supplied routine. The exportState argument in the user code cannot be optional.

[clock] External `ESMF_Clock` for passing in time information. This is generally the parent component's clock, and will be treated as read-only by the child component. The child component can maintain a private clock for its own internal time computations. If not present, a dummy argument will be passed to the user-supplied routine. The clock argument in the user code cannot be optional.

[syncflag] Blocking behavior of this method call. See section 55.59 for a list of valid blocking options. Default option is `ESMF_SYNC_VASBLOCKING` which blocks PETs and their spawned off threads across each VAS but does not synchronize PETs that run in different VASs.

[phase] Component providers must document whether each of their routines are *single-phase* or *multi-phase*. Single-phase routines require only one invocation to complete their work. Multi-phase routines provide multiple subroutines to accomplish the work, accommodating components which must complete part of their work, return to the caller and allow other processing to occur, and then continue the original operation. For multiple-phase child components, this is the integer phase number to be invoked. For single-phase child components this argument is optional. The default is 1.

[timeout] The maximum period in seconds that this call will wait in communications with the actual component, before returning with a timeout condition. The default is 3600, i.e. 1 hour. The `timeout` argument is only supported for connected dual components.

[timeoutFlag] Returns `.true.` if the timeout was reached, `.false.` otherwise. If `timeoutFlag` was *not* provided, a timeout condition will lead to a return code of `rc \= ESMF_SUCCESS`. Otherwise the return value of `timeoutFlag` is the sole indicator of a timeout condition.

[userRc] Return code set by `userRoutine` before returning.

[rc] Return code; equals `ESMF_SUCCESS` if there are no errors.

18.4.15 ESMF_CplCompServiceLoop - Call the CplComp's service loop routine

INTERFACE:

```
recursive subroutine ESMF_CplCompServiceLoop(cplcomp, &
  importState, exportState, clock, syncflag, port, timeout, timeoutFlag, rc)
```

ARGUMENTS:

```
    type(ESMF_CplComp),   intent(inout)           :: cplcomp
-- The following arguments require argument keyword syntax (e.g. rc=rc). --
    type(ESMF_State),     intent(inout), optional :: importState
    type(ESMF_State),     intent(inout), optional :: exportState
    type(ESMF_Clock),     intent(inout), optional :: clock
    type(ESMF_Sync_Flag), intent(in),    optional :: syncflag
    integer,              intent(in),    optional :: port
    integer,              intent(in),    optional :: timeout
    logical,              intent(out),   optional :: timeoutFlag
    integer,              intent(out),   optional :: rc
```

DESCRIPTION:

Call the ServiceLoop routine for an `ESMF_CplComp`. This tries to establish a "component tunnel" between the *actual* Component (calling this routine) and a `dual` Component connecting to it through a matching SetServices call.

The arguments are:

cplcomp `ESMF_CplComp` to call service loop routine for.

[importState] `ESMF_State` containing import data for coupling. If not present, a dummy argument will be passed to the user-supplied routine. The importState argument in the user code cannot be optional.

[exportState] `ESMF_State` containing export data for coupling. If not present, a dummy argument will be passed to the user-supplied routine. The exportState argument in the user code cannot be optional.

[clock] External `ESMF_Clock` for passing in time information. This is generally the parent component's clock, and will be treated as read-only by the child component. The child component can maintain a private clock for its own internal time computations. If not present, a dummy argument will be passed to the user-supplied routine. The clock argument in the user code cannot be optional.

[syncflag] Blocking behavior of this method call. See section 55.59 for a list of valid blocking options. Default option is `ESMF_SYNC_VASBLOCKING` which blocks PETs and their spawned off threads across each VAS but does not synchronize PETs that run in different VASs.

[port] In case a port number is provided, the "component tunnel" is established using sockets. The actual component side, i.e. the side that calls into `ESMF_CplCompServiceLoop()`, starts to listen on the specified port as the server. The valid port range is [1024, 65535]. In case the `port` argument is *not* specified, the "component tunnel" is established within the same executable using local communication methods (e.g. MPI).

[timeout] The maximum period in seconds that this call will wait for communications with the dual component, before returning with a timeout condition. The default is 3600, i.e. 1 hour. (NOTE: Currently this option is only available for socket based component tunnels.)

[timeoutFlag] Returns `.true.` if the timeout was reached, `.false.` otherwise. If `timeoutFlag` was *not* provided, a timeout condition will lead to a return code of `rc \= ESMF_SUCCESS`. Otherwise the return value of `timeoutFlag` is the sole indicator of a timeout condition.

[rc] Return code; equals `ESMF_SUCCESS` if there are no errors.

18.4.16 ESMF_CplCompSet - Set or reset information about the CplComp

INTERFACE:

```
subroutine ESMF_CplCompSet(cplcomp, hconfig, config, &
  configFile, clock, name, rc)
```

ARGUMENTS:

```
  type(ESMF_CplComp), intent(inout)         :: cplcomp
-- The following arguments require argument keyword syntax (e.g. rc=rc). --
  type(ESMF_HConfig), intent(in),  optional :: hconfig
  type(ESMF_Config),  intent(in),  optional :: config
  character(len=*),   intent(in),  optional :: configFile
  type(ESMF_Clock),   intent(in),  optional :: clock
  character(len=*),   intent(in),  optional :: name
  integer,            intent(out), optional :: rc
```

STATUS:

- This interface is backward compatible with ESMF versions starting at 5.2.0r. If code using this interface compiles with any version of ESMF starting with 5.2.0r, then it will compile with the current version.
- This interface was modified since ESMF version 5.2.0r. The fact that code using this interface compiles with the current ESMF version does not guarantee that it compiles with previous versions of this interface. If user code compatibility with version 5.2.0r is desired then care must be taken to limit the use of this interface to features that were available in the 5.2.0r release.
  Changes made after the 5.2.0r release:

  8.7.0 Added argument `hconfig` to simplify direct usage of `ESMF_HConfig` objects with Components.

DESCRIPTION:

Sets or resets information about an `ESMF_CplComp`.

The arguments are:

cplcomp `ESMF_CplComp` to change.

[name] Set the name of the `ESMF_CplComp`.

[hconfig] An already-created `ESMF_HConfig` object to be attached to the component. Only one of `hconfig`, `config`, or `configFile` must be specified.

[config] An already-created `ESMF_Config` object to be attached to the component. Only one of `hconfig`, `config`, or `configFile` must be specified.

[configFile] The filename of a config file. If specified, a new `ESMF_Config` object is created and attached to the component. The `configFile` file is opened and associated with the new config object. Only one of `hconfig`, `config`, or `configFile` must be specified.

[clock] Set the private clock for this `ESMF_CplComp`.

[rc] Return code; equals `ESMF_SUCCESS` if there are no errors.

18.4.17 ESMF_CplCompSetEntryPoint - Set user routine as entry point for standard Component method

INTERFACE:

```
recursive subroutine ESMF_CplCompSetEntryPoint(cplcomp, methodflag, &
  userRoutine, phase, rc)
```

ARGUMENTS:

```
  type(ESMF_CplComp),     intent(inout)         :: cplcomp
  type(ESMF_Method_Flag), intent(in)            :: methodflag
  interface
    subroutine userRoutine(cplcomp, importState, exportState, clock, rc)
      use ESMF_CompMod
      use ESMF_StateMod
      use ESMF_ClockMod
      implicit none
      type(ESMF_CplComp)          :: cplcomp      ! must not be optional
      type(ESMF_State)            :: importState  ! must not be optional
      type(ESMF_State)            :: exportState  ! must not be optional
      type(ESMF_Clock)            :: clock        ! must not be optional
      integer, intent(out)        :: rc           ! must not be optional
    end subroutine
  end interface
-- The following arguments require argument keyword syntax (e.g. rc=rc). --
  integer,                intent(in),  optional :: phase
  integer,                intent(out), optional :: rc
```

STATUS:

- This interface is backward compatible with ESMF versions starting at 5.2.0r. If code using this interface compiles with any version of ESMF starting with 5.2.0r, then it will compile with the current version.

DESCRIPTION:

Registers a user-supplied `userRoutine` as the entry point for one of the predefined Component `methodflag`s. After this call the `userRoutine` becomes accessible via the standard Component method API.

The arguments are:

cplcomp An `ESMF_CplComp` object.

methodflag One of a set of predefined Component methods - e.g. `ESMF_METHOD_INITIALIZE`, `ESMF_METHOD_RUN`, `ESMF_METHOD_FINALIZE`. See section 55.44 for a complete list of valid method options.

userRoutine The user-supplied subroutine to be associated for this `methodflag`. The Component writer must supply a subroutine with the exact interface shown above for the `userRoutine` argument. Arguments in `userRoutine` must not be declared as optional, and the types, intent and order must match. Prior to Fortran-2008, the subroutine must be either a module scope procedure, or an external procedure that has a matching interface block specified for it. An internal procedure which is contained within another procedure must not be used. From Fortran-2008 onwards, an internal procedure contained within either a main program or a module procedure may be used. If the internal procedure is contained within a module procedure, it is subject to initialization requirements. See: 16.4.9

[phase] The `phase` number for multi-phase methods. For single phase methods the `phase` argument can be omitted. The default setting is 1.

[rc] Return code; equals `ESMF_SUCCESS` if there are no errors.

18.4.18 ESMF_CplCompSetInternalState - Set private data block pointer - (DEPRECATED METHOD)

INTERFACE:

```
subroutine ESMF_CplCompSetInternalState(cplcomp, wrappedDataPointer, rc)
```

ARGUMENTS:

```
type(ESMF_CplComp)              :: cplcomp
type(wrapper)                   :: wrappedDataPointer
integer,            intent(out) :: rc
```

STATUS:

- This interface is backward compatible with ESMF versions starting at 5.2.0r. If code using this interface compiles with any version of ESMF starting with 5.2.0r, then it will compile with the current version.
- **DEPRECATED METHOD** as of ESMF 8.9.0. Please use `ESMF_InternalStateAdd`, section `22.4.1` instead.

DESCRIPTION:

Available to be called by an `ESMF_CplComp` at any time, but expected to be most useful when called during the registration process, or initialization. Since init, run, and finalize must be separate subroutines data that they need to share in common can either be module global data, or can be allocated in a private data block and the address of that block can be registered with the framework and retrieved by subsequent calls. When running multiple instantiations of an `ESMF_CplComp`, for example during ensemble runs, it may be simpler to maintain private data specific to each run with private data blocks. A corresponding `ESMF_CplCompGetInternalState` call retrieves the data pointer.

Only the *last* data block set via `ESMF_CplCompSetInternalState` will be accessible.

CAUTION: If you are working with a compiler that does not support Fortran 2018 assumed-type dummy arguments, then this method does not have an explicit Fortran interface. In this case do not specify argument keywords when calling this method!

The arguments are:

cplcomp An `ESMF_CplComp` object.

wrappedDataPointer A pointer to the private data block, wrapped in a derived type which contains only a pointer to the block. This level of indirection is needed to reliably set and retrieve the data block no matter which architecture or compiler is used.

rc Return code; equals `ESMF_SUCCESS` if there are no errors. Note: unlike most other ESMF routines, this argument is not optional because of implementation considerations.

18.4.19 ESMF_CplCompSetServices - Call user routine to register CplComp methods

INTERFACE:

```
recursive subroutine ESMF_CplCompSetServices(cplcomp, userRoutine, &
   userRc, rc)
```

ARGUMENTS:

```
     type(ESMF_CplComp), intent(inout)         :: cplcomp
     interface
       subroutine userRoutine(cplcomp, rc)
         use ESMF_CompMod
         implicit none
         type(ESMF_CplComp)         :: cplcomp  ! must not be optional
         integer, intent(out)       :: rc       ! must not be optional
       end subroutine
     end interface
 -- The following arguments require argument keyword syntax (e.g. rc=rc). --
     integer,            intent(out), optional :: userRc
     integer,            intent(out), optional :: rc
```

STATUS:

- This interface is backward compatible with ESMF versions starting at 5.2.0r. If code using this interface compiles with any version of ESMF starting with 5.2.0r, then it will compile with the current version.

DESCRIPTION:

Call into user provided `userRoutine` which is responsible for setting Component's Initialize(), Run(), and Finalize() services.

The arguments are:

cplcomp Coupler Component.

userRoutine The Component writer must supply a subroutine with the exact interface shown above for the `userRoutine` argument. Arguments in `userRoutine` must not be declared as optional, and the types, intent and order must match. Prior to Fortran-2008, the subroutine must be either a module scope procedure, or an external procedure that has a matching interface block specified for it. An internal procedure which is contained within another procedure must not be used. From Fortran-2008 onwards, an internal procedure contained

within either a main program or a module procedure may be used. If the internal procedure is contained within a module procedure, it is subject to initialization requirements. See: 16.4.9

The `userRoutine`, when called by the framework, must make successive calls to `ESMF_CplCompSetEntryPoint()` to preset callback routines for standard Component Initialize(), Run(), and Finalize() methods.

[userRc] Return code set by `userRoutine` before returning.

[rc] Return code; equals `ESMF_SUCCESS` if there are no errors.

18.4.20 ESMF_CplCompSetServices - Call user routine through name lookup, to register CplComp methods

INTERFACE:

```
! Private name; call using ESMF_CplCompSetServices()
recursive subroutine ESMF_CplCompSetServicesShObj(cplcomp, userRoutine, &
  sharedObj, userRoutineFound, userRc, rc)
```

ARGUMENTS:

```
    type(ESMF_CplComp),  intent(inout)          :: cplcomp
    character(len=*),    intent(in)             :: userRoutine
-- The following arguments require argument keyword syntax (e.g. rc=rc). --
    character(len=*),    intent(in),  optional :: sharedObj
    logical,             intent(out), optional :: userRoutineFound
    integer,             intent(out), optional :: userRc
    integer,             intent(out), optional :: rc
```

STATUS:

- This interface is backward compatible with ESMF versions starting at 5.2.0r. If code using this interface compiles with any version of ESMF starting with 5.2.0r, then it will compile with the current version.
- This interface was modified since ESMF version 5.2.0r. The fact that code using this interface compiles with the current ESMF version does not guarantee that it compiles with previous versions of this interface. If user code compatibility with version 5.2.0r is desired then care must be taken to limit the use of this interface to features that were available in the 5.2.0r release.
  Changes made after the 5.2.0r release:

  6.3.0r Added argument `userRoutineFound`. The new argument provides a way to test availability without causing error conditions.

DESCRIPTION:

Call into a user provided routine which is responsible for setting Component's Initialize(), Run(), and Finalize() services. The named `userRoutine` must exist in the executable, or in the shared object specified by `sharedObj`. In the latter case all of the platform specific details about dynamic linking and loading apply.

The arguments are:

cplcomp Coupler Component.

userRoutine Name of routine to be called, specified as a character string. The Component writer must supply a subroutine with the exact interface shown for `userRoutine` below. Arguments must not be declared as optional, and the types, intent and order must match. Prior to Fortran-2008, the subroutine must be either a module scope procedure, or an external procedure that has a matching interface block specified for it. An internal procedure which is contained within another procedure must not be used. From Fortran-2008 onwards, an internal procedure contained within either a main program or a module procedure may be used. If the internal procedure is contained within a module procedure, it is subject to initialization requirements. See: 16.4.9

INTERFACE:

```
interface
  subroutine userRoutine(cplcomp, rc)
    type(ESMF_CplComp)   :: cplcomp    ! must not be optional
    integer, intent(out) :: rc         ! must not be optional
  end subroutine
end interface
```

DESCRIPTION:

The `userRoutine`, when called by the framework, must make successive calls to `ESMF_CplCompSetEntryPoint()` to preset callback routines for standard Component Initialize(), Run(), and Finalize() methods.

[sharedObj] Name of shared object that contains `userRoutine`. The asterisk character `(*)` is supported as a wildcard for the file name suffix. When present, the asterisk is replaced by "so", "dylib", and "dll", in this order, and the first successfully loaded object is used to search for `userRoutine`. If the `sharedObj` argument is not provided, the executable itself is searched for `userRoutine`.

[userRoutineFound] Report back whether the specified `userRoutine` was found and executed, or was not available. If this argument is present, not finding the `userRoutine` will not result in returning an error in `rc`. The default is to return an error if the `userRoutine` cannot be found.

[userRc] Return code set by `userRoutine` before returning.

[rc] Return code; equals `ESMF_SUCCESS` if there are no errors.

18.4.21 ESMF_CplCompSetServices - Set to serve as Dual Component for an Actual Component

INTERFACE:

```
! Private name; call using ESMF_CplCompSetServices()
recursive subroutine ESMF_CplCompSetServicesComp(cplcomp, &
  actualCplcomp, rc)
```

ARGUMENTS:

```
  type(ESMF_CplComp), intent(inout)         :: cplcomp
  type(ESMF_CplComp), intent(in)            :: actualCplcomp
-- The following arguments require argument keyword syntax (e.g. rc=rc). --
  integer,            intent(out), optional :: rc
```

DESCRIPTION:

Set the services of a Coupler Component to serve a "dual" Component for an "actual" Component. The component tunnel is VM based.

The arguments are:

cplcomp Dual Coupler Component.

actualCplcomp Actual Coupler Component.

[rc] Return code; equals `ESMF_SUCCESS` if there are no errors.

18.4.22 ESMF_CplCompSetServices - Set to serve as Dual Component for an Actual Component through sockets

INTERFACE:

```
! Private name; call using ESMF_CplCompSetServices()
recursive subroutine ESMF_CplCompSetServicesSock(cplcomp, port, &
  server, timeout, timeoutFlag, rc)
```

ARGUMENTS:

```
  type(ESMF_CplComp), intent(inout)         :: cplcomp
  integer,            intent(in)            :: port
-- The following arguments require argument keyword syntax (e.g. rc=rc). --
  character(len=*),   intent(in),  optional :: server
  integer,            intent(in),  optional :: timeout
  logical,            intent(out), optional :: timeoutFlag
  integer,            intent(out), optional :: rc
```

DESCRIPTION:

Set the services of a Coupler Component to serve a "dual" Component for an "actual" Component. The component tunnel is socket based.

The arguments are:

cplcomp Dual Coupler Component.

port Port number under which the actual component is being served. The valid port range is [1024, 65535].

[server] Server name where the actual component is being served. The default, i.e. if the `server` argument was not provided, is `localhost`.

[timeout] The maximum period in seconds that this call will wait in communications with the actual component, before returning with a timeout condition. The default is 3600, i.e. 1 hour.

[timeoutFlag] Returns `.true.` if the timeout was reached, `.false.` otherwise. If `timeoutFlag` was *not* provided, a timeout condition will lead to a return code of `rc \= ESMF_SUCCESS`. Otherwise the return value of `timeoutFlag` is the sole indicator of a timeout condition.

[rc] Return code; equals `ESMF_SUCCESS` if there are no errors.

18.4.23 ESMF_CplCompSetVM - Call user routine to set CplComp VM properties

INTERFACE:

```
recursive subroutine ESMF_CplCompSetVM(cplcomp, userRoutine, &
  userRc, rc)
```

ARGUMENTS:

```
     type(ESMF_CplComp), intent(inout)         :: cplcomp
     interface
       subroutine userRoutine(cplcomp, rc)
         use ESMF_CompMod
         implicit none
         type(ESMF_CplComp)         :: cplcomp  ! must not be optional
         integer, intent(out)       :: rc       ! must not be optional
       end subroutine
     end interface
 -- The following arguments require argument keyword syntax (e.g. rc=rc). --
     integer,            intent(out), optional :: userRc
     integer,            intent(out), optional :: rc
```

STATUS:

- This interface is backward compatible with ESMF versions starting at 5.2.0r. If code using this interface compiles with any version of ESMF starting with 5.2.0r, then it will compile with the current version.

DESCRIPTION:

Optionally call into user provided `userRoutine` which is responsible for setting Component's VM properties.

The arguments are:

cplcomp Coupler Component.

userRoutine The Component writer must supply a subroutine with the exact interface shown above for the `userRoutine` argument. Arguments in `userRoutine` must not be declared as optional, and the types, intent and order must match. Prior to Fortran-2008, the subroutine must be either a module scope procedure, or an external procedure that has a matching interface block specified for it. An internal procedure which is contained within another procedure must not be used. From Fortran-2008 onwards, an internal procedure contained within either a main program or a module procedure may be used. If the internal procedure is contained within a module procedure, it is subject to initialization requirements. See: 16.4.9

The subroutine, when called by the framework, is expected to use any of the `ESMF_CplCompSetVMxxx()` methods to set the properties of the VM associated with the Coupler Component.

[userRc] Return code set by `userRoutine` before returning.

[rc] Return code; equals `ESMF_SUCCESS` if there are no errors.

18.4.24 ESMF_CplCompSetVM - Call user routine through name lookup, to set CplComp VM properties

INTERFACE:

```
! Private name; call using ESMF_CplCompSetVM()
recursive subroutine ESMF_CplCompSetVMShObj(cplcomp, userRoutine, &
  sharedObj, userRoutineFound, userRc, rc)
```

ARGUMENTS:

```
  type(ESMF_CplComp),  intent(inout)         :: cplcomp
  character(len=*),    intent(in)            :: userRoutine
-- The following arguments require argument keyword syntax (e.g. rc=rc). --
  character(len=*),    intent(in),  optional :: sharedObj
  logical,             intent(out), optional :: userRoutineFound
  integer,             intent(out), optional :: userRc
  integer,             intent(out), optional :: rc
```

STATUS:

- This interface is backward compatible with ESMF versions starting at 5.2.0r. If code using this interface compiles with any version of ESMF starting with 5.2.0r, then it will compile with the current version.
- This interface was modified since ESMF version 5.2.0r. The fact that code using this interface compiles with the current ESMF version does not guarantee that it compiles with previous versions of this interface. If user code compatibility with version 5.2.0r is desired then care must be taken to limit the use of this interface to features that were available in the 5.2.0r release.
  Changes made after the 5.2.0r release:

  8.4.0 Added argument `userRoutineFound`. The new argument provides a way to test availability without causing error conditions.

DESCRIPTION:

Optionally call into user provided `userRoutine` which is responsible for setting Component's VM properties. The named `userRoutine` must exist in the executable, or in the shared object specified by `sharedObj`. In the latter case all of the platform specific details about dynamic linking and loading apply.

The arguments are:

cplcomp Coupler Component.

userRoutine Routine to be called, specified as a character string. The Component writer must supply a subroutine with the exact interface shown for `userRoutine` below. Arguments must not be declared as optional, and the types, intent and order must match. Prior to Fortran-2008, the subroutine must be either a module scope procedure, or an external procedure that has a matching interface block specified for it. An internal procedure which is contained within another procedure must not be used. From Fortran-2008 onwards, an internal procedure contained within either a main program or a module procedure may be used. If the internal procedure is contained within a module procedure, it is subject to initialization requirements. See: 16.4.9

INTERFACE:

```
interface
  subroutine userRoutine(cplcomp, rc)
    type(ESMF_CplComp)   :: cplcomp     ! must not be optional
    integer, intent(out) :: rc          ! must not be optional
  end subroutine
end interface
```

DESCRIPTION:

The subroutine, when called by the framework, is expected to use any of the `ESMF_CplCompSetVMxxx()` methods to set the properties of the VM associated with the Coupler Component.

[sharedObj] Name of shared object that contains `userRoutine`. The asterisk character `(*)` is supported as a wildcard for the file name suffix. When present, the asterisk is replaced by "so", "dylib", and "dll", in this order, and the first successfully loaded object is used to search for `userRoutine`. If the `sharedObj` argument is not provided, the executable itself is searched for `userRoutine`.

[userRoutineFound] Report back whether the specified `userRoutine` was found and executed, or was not available. If this argument is present, not finding the `userRoutine` will not result in returning an error in `rc`. The default is to return an error if the `userRoutine` cannot be found.

[userRc] Return code set by `userRoutine` before returning.

[rc] Return code; equals `ESMF_SUCCESS` if there are no errors.

18.4.25 ESMF_CplCompSetVMMaxPEs - Associate PEs with PETs in CplComp VM

INTERFACE:

```
subroutine ESMF_CplCompSetVMMaxPEs(cplcomp, &
  maxPeCountPerPet, prefIntraProcess, prefIntraSsi, prefInterSsi, &
  pthreadMinStackSize, forceChildPthreads, rc)
```

ARGUMENTS:

```
  type(ESMF_CplComp),  intent(inout)         :: cplcomp
-- The following arguments require argument keyword syntax (e.g. rc=rc). --
  integer,             intent(in),  optional :: maxPeCountPerPet
  integer,             intent(in),  optional :: prefIntraProcess
  integer,             intent(in),  optional :: prefIntraSsi
  integer,             intent(in),  optional :: prefInterSsi
  integer,             intent(in),  optional :: pthreadMinStackSize
  logical,             intent(in),  optional :: forceChildPthreads
  integer,             intent(out), optional :: rc
```

DESCRIPTION:

Set characteristics of the `ESMF_VM` for this `ESMF_CplComp`. Attempts to associate up to `maxPeCountPerPet` PEs with each PET. Only PEs that are located on the same single system image (SSI) can be associated with the same PET. Within this constraint the call tries to get as close as possible to the number specified by `maxPeCountPerPet`.

The other constraint to this call is that the number of PEs is preserved. This means that the child Component in the end is associated with as many PEs as the parent Component provided to the child. The number of child PETs however is adjusted according to the above rule.

The typical use of `ESMF_CplCompSetVMMaxPEs()` is to allocate multiple PEs per PET in a Component for user-level threading, e.g. OpenMP.

The arguments are:

cplcomp `ESMF_CplComp` to set the `ESMF_VM` for.

[maxPeCountPerPet] Maximum number of PEs on each PET. Default for each SSI is the local number of PEs.

[prefIntraProcess] Communication preference within a single process. *Currently options not documented. Use default.*

[prefIntraSsi] Communication preference within a single system image (SSI). *Currently options not documented. Use default.*

[prefInterSsi] Communication preference between different single system images (SSIs). *Currently options not documented. Use default.*

[pthreadMinStackSize] Minimum stack size in byte of any child PET executing as Pthread. By default single threaded child PETs do *not* execute as Pthread, and their stack size is unaffected by this argument. However, for multi-threaded child PETs, or if `forceChildPthreads` is `.true.`, child PETs execute as Pthreads with their own private stack.

For cases where OpenMP threads are used by the user code, each thread allocates its own private stack. For all threads *other* than the master, the stack size is set via the typical `OMP_STACKSIZE` environment variable mechanism. The PET itself, however, becomes the *master* of the OpenMP thread team, and is not affected by `OMP_STACKSIZE`. It is the master's stack that can be sized via the `pthreadMinStackSize` argument, and a large enough size is often critical.

When `pthreadMinStackSize` is absent, the default is to use the system default set by the `limit` or `ulimit` command. However, the stack of a Pthread cannot be unlimited, and a shell *stacksize* setting of *unlimited*, or any setting below the ESMF implemented minimum, will result in setting the stack size to 20MiB (the ESMF minimum). Depending on how much private data is used by the user code under the master thread, the default might be too small, and `pthreadMinStackSize` must be used to allocate sufficient stack space.

[forceChildPthreads] For `.true.`, force each child PET to execute in its own Pthread. By default, `.false.`, single PETs spawned from a parent PET execute in the same thread (or MPI process) as the parent PET. Multiple child PETs spawned by the same parent PET always execute as their own Pthreads.

[rc] Return code; equals `ESMF_SUCCESS` if there are no errors.

18.4.26 ESMF_CplCompSetVMMaxThreads - Set multi-threaded PETs in CplComp VM

INTERFACE:

```
subroutine ESMF_CplCompSetVMMaxThreads(cplcomp, &
  maxPetCountPerVas, prefIntraProcess, prefIntraSsi, prefInterSsi, &
  pthreadMinStackSize, forceChildPthreads, rc)
```

ARGUMENTS:

```
    type(ESMF_CplComp),  intent(inout)         :: cplcomp
-- The following arguments require argument keyword syntax (e.g. rc=rc). --
    integer,             intent(in),  optional :: maxPetCountPerVas
    integer,             intent(in),  optional :: prefIntraProcess
    integer,             intent(in),  optional :: prefIntraSsi
    integer,             intent(in),  optional :: prefInterSsi
    integer,             intent(in),  optional :: pthreadMinStackSize
    logical,             intent(in),  optional :: forceChildPthreads
    integer,             intent(out), optional :: rc
```

DESCRIPTION:

Set characteristics of the `ESMF_VM` for this `ESMF_CplComp`. Attempts to provide `maxPetCountPerVas` threaded PETs in each virtual address space (VAS). Only as many threaded PETs as there are PEs located on the single system image (SSI) can be associated with the VAS. Within this constraint the call tries to get as close as possible to the number specified by `maxPetCountPerVas`.

The other constraint to this call is that the number of PETs is preserved. This means that the child Component in the end is associated with as many PETs as the parent Component provided to the child. The threading level of the child PETs however is adjusted according to the above rule.

The typical use of `ESMF_CplCompSetVMMaxThreads()` is to run a Component multi-threaded with groups of PETs executing within a common virtual address space.

The arguments are:

cplcomp `ESMF_CplComp` to set the `ESMF_VM` for.

[maxPetCountPerVas] Maximum number of threaded PETs in each virtual address space (VAS). Default for each SSI is the local number of PEs.

[prefIntraProcess] Communication preference within a single process. *Currently options not documented. Use default.*

[prefIntraSsi] Communication preference within a single system image (SSI). *Currently options not documented. Use default.*

[prefInterSsi] Communication preference between different single system images (SSIs). *Currently options not documented. Use default.*

[pthreadMinStackSize] Minimum stack size in byte of any child PET executing as Pthread. By default single threaded child PETs do *not* execute as Pthread, and their stack size is unaffected by this argument. However, for multi-threaded child PETs, or if `forceChildPthreads` is `.true.`, child PETs execute as Pthreads with their own private stack.

For cases where OpenMP threads are used by the user code, each thread allocates its own private stack. For all threads *other* than the master, the stack size is set via the typical `OMP_STACKSIZE` environment variable mechanism. The PET itself, however, becomes the *master* of the OpenMP thread team, and is not affected by `OMP_STACKSIZE`. It is the master's stack that can be sized via the `pthreadMinStackSize` argument, and a large enough size is often critical.

When `pthreadMinStackSize` is absent, the default is to use the system default set by the `limit` or `ulimit` command. However, the stack of a Pthread cannot be unlimited, and a shell *stacksize* setting of *unlimited*, or any setting below the ESMF implemented minimum, will result in setting the stack size to 20MiB (the ESMF minimum). Depending on how much private data is used by the user code under the master thread, the default might be too small, and `pthreadMinStackSize` must be used to allocate sufficient stack space.

[forceChildPthreads] For `.true.`, force each child PET to execute in its own Pthread. By default, `.false.`, single PETs spawned from a parent PET execute in the same thread (or MPI process) as the parent PET. Multiple child PETs spawned by the same parent PET always execute as their own Pthreads.

[rc] Return code; equals `ESMF_SUCCESS` if there are no errors.

18.4.27 ESMF_CplCompSetVMMinThreads - Set a reduced threading level in CplComp VM

INTERFACE:

```
subroutine ESMF_CplCompSetVMMinThreads(cplcomp, &
  maxPeCountPerPet, prefIntraProcess, prefIntraSsi, prefInterSsi, &
  pthreadMinStackSize, forceChildPthreads, rc)
```

ARGUMENTS:

```
  type(ESMF_CplComp),  intent(inout)         :: cplcomp
-- The following arguments require argument keyword syntax (e.g. rc=rc). --
  integer,             intent(in),  optional :: maxPeCountPerPet
  integer,             intent(in),  optional :: prefIntraProcess
  integer,             intent(in),  optional :: prefIntraSsi
  integer,             intent(in),  optional :: prefInterSsi
  integer,             intent(in),  optional :: pthreadMinStackSize
  logical,             intent(in),  optional :: forceChildPthreads
  integer,             intent(out), optional :: rc
```

DESCRIPTION:

Set characteristics of the `ESMF_VM` for this `ESMF_CplComp`. Reduces the number of threaded PETs in each VAS. The `max` argument may be specified to limit the maximum number of PEs that a single PET can be associated with.

Several constraints apply: 1) the number of PEs cannot change, 2) PEs cannot migrate between single system images (SSIs), 3) the number of PETs cannot increase, only decrease, 4) PETs cannot migrate between virtual address spaces (VASs), nor can VASs migrate between SSIs.

The typical use of `ESMF_CplCompSetVMMinThreads()` is to run a Component across a set of single-threaded PETs.

The arguments are:

cplcomp `ESMF_CplComp` to set the `ESMF_VM` for.

[maxPeCountPerPet] Maximum number of PEs on each PET. Default for each SSI is the local number of PEs.

[prefIntraProcess] Communication preference within a single process. *Currently options not documented. Use default.*

[prefIntraSsi] Communication preference within a single system image (SSI). *Currently options not documented. Use default.*

[prefInterSsi] Communication preference between different single system images (SSIs). *Currently options not documented. Use default.*

[pthreadMinStackSize] Minimum stack size in byte of any child PET executing as Pthread. By default single threaded child PETs do *not* execute as Pthread, and their stack size is unaffected by this argument. However, for

multi-threaded child PETs, or if `forceChildPthreads` is `.true.`, child PETs execute as Pthreads with their own private stack.

For cases where OpenMP threads are used by the user code, each thread allocates its own private stack. For all threads *other* than the master, the stack size is set via the typical `OMP_STACKSIZE` environment variable mechanism. The PET itself, however, becomes the *master* of the OpenMP thread team, and is not affected by `OMP_STACKSIZE`. It is the master's stack that can be sized via the `pthreadMinStackSize` argument, and a large enough size is often critical.

When `pthreadMinStackSize` is absent, the default is to use the system default set by the `limit` or `ulimit` command. However, the stack of a Pthread cannot be unlimited, and a shell *stacksize* setting of *unlimited*, or any setting below the ESMF implemented minimum, will result in setting the stack size to 20MiB (the ESMF minimum). Depending on how much private data is used by the user code under the master thread, the default might be too small, and `pthreadMinStackSize` must be used to allocate sufficient stack space.

[forceChildPthreads] For `.true.`, force each child PET to execute in its own Pthread. By default, `.false.`, single PETs spawned from a parent PET execute in the same thread (or MPI process) as the parent PET. Multiple child PETs spawned by the same parent PET always execute as their own Pthreads.

[rc] Return code; equals `ESMF_SUCCESS` if there are no errors.

18.4.28 ESMF_CplCompSetVMStdRedirect - Set stdout and stderr redirect in CplComp VM

INTERFACE:

```
subroutine ESMF_CplCompSetVMStdRedirect(cplcomp, &
  stdout, stderr, rc)
```

ARGUMENTS:

```
     type(ESMF_CplComp),  intent(inout)         :: cplcomp
 -- The following arguments require argument keyword syntax (e.g. rc=rc). --
     character(*),        intent(in),  optional :: stdout
     character(*),        intent(in),  optional :: stderr
     integer,             intent(out), optional :: rc
```

DESCRIPTION:

Set stdout and stderr redirect in the `ESMF_VM` for this `ESMF_CplComp`.

The arguments are:

cplcomp `ESMF_CplComp` to set the `ESMF_VM` for.

[stdout] Filename for the stdout redirect. If found, the last occurance of the asterisk symbol `*` in `stdout` is treated as a wildcard and replaced by the local PET number. By default do not redirect.

[stderr] Filename for the stderr redirect. If found, the last occurance of the asterisk symbol `*` in `stderr` is treated as a wildcard and replaced by the local PET number. By default do not redirect.

[rc] Return code; equals `ESMF_SUCCESS` if there are no errors.

18.4.29 ESMF_CplCompValidate – Ensure the CplComp is internally consistent

INTERFACE:

```
subroutine ESMF_CplCompValidate(cplcomp, rc)
```

ARGUMENTS:

```
    type(ESMF_CplComp), intent(in)            :: cplcomp
 -- The following arguments require argument keyword syntax (e.g. rc=rc). --
    integer,            intent(out), optional :: rc
```

STATUS:

- This interface is backward compatible with ESMF versions starting at 5.2.0r. If code using this interface compiles with any version of ESMF starting with 5.2.0r, then it will compile with the current version.

DESCRIPTION:

Currently all this method does is to check that the `cplcomp` was created.

The arguments are:

cplcomp `ESMF_CplComp` to validate.

[rc] Return code; equals `ESMF_SUCCESS` if there are no errors.

18.4.30 ESMF_CplCompWait - Wait for a CplComp to return

INTERFACE:

```
subroutine ESMF_CplCompWait(cplcomp, syncflag, &
  timeout, timeoutFlag, userRc, rc)
```

ARGUMENTS:

```
    type(ESMF_CplComp),   intent(inout)         :: cplcomp
 -- The following arguments require argument keyword syntax (e.g. rc=rc). --
    type(ESMF_Sync_Flag), intent(in),  optional :: syncflag
    integer,              intent(in),  optional :: timeout
    logical,              intent(out), optional :: timeoutFlag
    integer,              intent(out), optional :: userRc
    integer,              intent(out), optional :: rc
```

STATUS:

- This interface is backward compatible with ESMF versions starting at 5.2.0r. If code using this interface compiles with any version of ESMF starting with 5.2.0r, then it will compile with the current version.
- This interface was modified since ESMF version 5.2.0r. The fact that code using this interface compiles with the current ESMF version does not guarantee that it compiles with previous versions of this interface. If user code compatibility with version 5.2.0r is desired then care must be taken to limit the use of this interface to features that were available in the 5.2.0r release.
  Changes made after the 5.2.0r release:

  5.3.0 Added argument `timeout`. Added argument `timeoutFlag`. The new arguments provide access to the fault-tolerant component features.

DESCRIPTION:

When executing asynchronously, wait for an `ESMF_CplComp` to return.

The arguments are:

cplcomp `ESMF_CplComp` to wait for.

[syncflag] Blocking behavior of this method call. See section 55.59 for a list of valid blocking options. Default option is `ESMF_SYNC_VASBLOCKING` which blocks PETs and their spawned off threads across each VAS but does not synchronize PETs that run in different VASs.

[timeout] The maximum period in seconds the actual component is allowed to execute a previously invoked component method before it must communicate back to the dual component. If the actual component does not communicate back in the specified time, a timeout condition is raised on the dual side (this side). The default is 3600, i.e. 1 hour. The `timeout` argument is only supported for connected dual components.

[timeoutFlag] Returns `.true.` if the timeout was reached, `.false.` otherwise. If `timeoutFlag` was *not* provided, a timeout condition will lead to a return code of `rc \= ESMF_SUCCESS`. Otherwise the return value of `timeoutFlag` is the sole indicator of a timeout condition.

[userRc] Return code set by `userRoutine` before returning.

[rc] Return code; equals `ESMF_SUCCESS` if there are no errors.

18.4.31 ESMF_CplCompWriteRestart – Call the CplComp's write restart routine

INTERFACE:

```
recursive subroutine ESMF_CplCompWriteRestart(cplcomp, &
  importState, exportState, clock, syncflag, phase, timeout, timeoutFlag, &
  userRc, rc)
```

ARGUMENTS:

```
  type(ESMF_CplComp),   intent(inout)           :: cplcomp
-- The following arguments require argument keyword syntax (e.g. rc=rc). --
  type(ESMF_State),     intent(inout), optional :: importState
  type(ESMF_State),     intent(inout), optional :: exportState
```

```
type(ESMF_Clock),     intent(inout), optional :: clock
type(ESMF_Sync_Flag), intent(in),    optional :: syncflag
integer,              intent(in),    optional :: phase
integer,              intent(in),    optional :: timeout
logical,              intent(out),   optional :: timeoutFlag
integer,              intent(out),   optional :: userRc
integer,              intent(out),   optional :: rc
```

STATUS:

- This interface is backward compatible with ESMF versions starting at 5.2.0r. If code using this interface compiles with any version of ESMF starting with 5.2.0r, then it will compile with the current version.
- This interface was modified since ESMF version 5.2.0r. The fact that code using this interface compiles with the current ESMF version does not guarantee that it compiles with previous versions of this interface. If user code compatibility with version 5.2.0r is desired then care must be taken to limit the use of this interface to features that were available in the 5.2.0r release.
  Changes made after the 5.2.0r release:

  5.3.0 Added argument `timeout`. Added argument `timeoutFlag`. The new arguments provide access to the fault-tolerant component features.

DESCRIPTION:

Call the associated user write restart routine for an `ESMF_CplComp`.

The arguments are:

cplcomp `ESMF_CplComp` to call run routine for.

[importState] `ESMF_State` containing import data. If not present, a dummy argument will be passed to the user-supplied routine. The importState argument in the user code cannot be optional.

[exportState] `ESMF_State` containing export data. If not present, a dummy argument will be passed to the user-supplied routine. The exportState argument in the user code cannot be optional.

[clock] External `ESMF_Clock` for passing in time information. This is generally the parent component's clock, and will be treated as read-only by the child component. The child component can maintain a private clock for its own internal time computations. If not present, a dummy argument will be passed to the user-supplied routine. The clock argument in the user code cannot be optional.

[syncflag] Blocking behavior of this method call. See section 55.59 for a list of valid blocking options. Default option is `ESMF_SYNC_VASBLOCKING` which blocks PETs and their spawned off threads across each VAS but does not synchronize PETs that run in different VASs.

[phase] Component providers must document whether each of their routines are *single-phase* or *multi-phase*. Single-phase routines require only one invocation to complete their work. Multi-phase routines provide multiple subroutines to accomplish the work, accommodating components which must complete part of their work, return to the caller and allow other processing to occur, and then continue the original operation. For multiple-phase child components, this is the integer phase number to be invoked. For single-phase child components this argument is optional. The default is 1.

[timeout] The maximum period in seconds that this call will wait in communications with the actual component, before returning with a timeout condition. The default is 3600, i.e. 1 hour. The `timeout` argument is only supported for connected dual components.

[timeoutFlag] Returns `.true.` if the timeout was reached, `.false.` otherwise. If `timeoutFlag` was *not* provided, a timeout condition will lead to a return code of `rc \= ESMF_SUCCESS`. Otherwise the return value of `timeoutFlag` is the sole indicator of a timeout condition.

[userRc] Return code set by `userRoutine` before returning.

[rc] Return code; equals `ESMF_SUCCESS` if there are no errors.

19 SciComp Class

19.1 Description

In Earth system modeling, a particular piece of code representing a physical domain, such as an atmospheric model or an ocean model, is typically implemented as an ESMF Gridded Component, or `ESMC_GridComp`. However, there are times when physical domains, or realms, need to be represented, but aren't actual pieces of code, or software. These domains can be implemented as ESMF Science Components, or `ESMC_SciComp`.

Unlike Gridded and Coupler Components, Science Components are not associated with software; they don't include execution routines such as initialize, run and finalize. The main purpose of a Science Component is to provide a container for Attributes within a Component hierarchy.

19.2 Use and Examples

A Science Component is a container object intended to represent scientific domains, or realms, in an Earth Science Model. It's primary purpose is to provide a means for representing Component metadata within a hierarchy of Components, and it does this by being a container for Attributes as well as other Components.

19.2.1 Use ESMF_SciComp and Attach Attributes

This example illustrates the use of the ESMF_SciComp to attach Attributes within a Component hierarchy. The hierarchy includes Coupler, Gridded, and Science Components and Attributes are attached to the Science Components. For demonstrable purposes, we'll add some CIM Component attributes to the Gridded Component.

Create the top 2 levels of the Component hierarchy. This example creates a parent Coupler Component and 2 Gridded Components as children.

```
! Create top-level Coupler Component
cplcomp = ESMF_CplCompCreate(name="coupler_component", rc=rc)

! Create Gridded Component for Atmosphere
atmcomp = ESMF_GridCompCreate(name="Atmosphere", rc=rc)

! Create Gridded Component for Ocean
ocncomp = ESMF_GridCompCreate(name="Ocean", rc=rc)
```

Now add CIM Attribute packages to the Component. Also, add a CIM Component Properties package, to contain two custom attributes.

```
convCIM = 'CIM 1.5'
purpComp = 'ModelComp'
purpProp = 'CompProp'
purpField = 'Inputs'
purpPlatform = 'Platform'

convISO = 'ISO 19115'
purpRP = 'RespParty'
purpCitation = 'Citation'

! Add CIM Attribute package to the Science Component
call ESMF_AttributeAdd(atmcomp, convention=convCIM, &
  purpose=purpComp, attpack=attpack, rc=rc)
```

The Attribute package can also be retrieved in a multi-Component setting like this:

```
call ESMF_AttributeGetAttPack(atmcomp, convCIM, purpComp, &
                              attpack=attpack, rc=rc)
```

Now, add some CIM Component attributes to the Atmosphere Grid Component.

```
!
! Top-level model component attributes, set on gridded component
!
call ESMF_AttributeSet(atmcomp, 'ShortName', 'EarthSys_Atmos', &
  attpack=attpack, rc=rc)


call ESMF_AttributeSet(atmcomp, 'LongName', &
  'Earth System High Resolution Global Atmosphere Model', &
  attpack=attpack, rc=rc)


call ESMF_AttributeSet(atmcomp, 'Description', &
  'EarthSys brings together expertise from the global ' // &
  'community in a concerted effort to develop coupled ' // &
  'climate models with increased horizontal resolutions.  ' // &
  'Increasing the horizontal resolution of coupled climate ' // &
  'models will allow us to capture climate processes and ' // &
  'weather systems in much greater detail.', &
  attpack=attpack, rc=rc)


call ESMF_AttributeSet(atmcomp, 'Version', '2.0', &
  attpack=attpack, rc=rc)


call ESMF_AttributeSet(atmcomp, 'ReleaseDate', '2009-01-01T00:00:00Z', &
  attpack=attpack, rc=rc)


call ESMF_AttributeSet(atmcomp, 'ModelType', 'aerosol', &
  attpack=attpack, rc=rc)
```

```
call ESMF_AttributeSet(atmcomp, 'URL', &
  'www.earthsys.org', attpack=attpack, rc=rc)
```

Now create a set of Science Components as a children of the Atmosphere Gridded Component. The hierarchy is as follows:

- Atmosphere
  - AtmosDynamicalCore
    - AtmosAdvection
  - AtmosRadiation

After each Component is created, we need to link it with its parent Component. We then add some standard CIM Component properties as well as Scientific Properties to each of these components.

```
!
! Atmosphere Dynamical Core Science Component
!
dc_scicomp = ESMF_SciCompCreate(name="AtmosDynamicalCore", rc=rc)

call ESMF_AttributeAdd(dc_scicomp,  &
                       convention=convCIM, purpose=purpComp, &
                       attpack=attpack, rc=rc)

call ESMF_AttributeSet(dc_scicomp, "ShortName", "AtmosDynamicalCore", &
                       attpack=attpack, rc=rc)
call ESMF_AttributeSet(dc_scicomp, "LongName", &
                       "Atmosphere Dynamical Core", &
                       attpack=attpack, rc=rc)

purpSci = 'SciProp'

dc_sciPropAtt(1) = 'TopBoundaryCondition'
dc_sciPropAtt(2) = 'HeatTreatmentAtTop'
dc_sciPropAtt(3) = 'WindTreatmentAtTop'

call ESMF_AttributeAdd(dc_scicomp,  &
                       convention=convCIM, purpose=purpSci, &
                       attrList=dc_sciPropAtt, &
                       attpack=attpack, rc=rc)

call ESMF_AttributeSet(dc_scicomp, 'TopBoundaryCondition', &
                       'radiation boundary condition', &
                       attpack=attpack, rc=rc)
call ESMF_AttributeSet(dc_scicomp, 'HeatTreatmentAtTop', &
                       'some heat treatment', &
                       attpack=attpack, rc=rc)
call ESMF_AttributeSet(dc_scicomp, 'WindTreatmentAtTop', &
                       'some wind treatment', &
                       attpack=attpack, rc=rc)
```

```
!
! Atmosphere Advection Science Component
!
adv_scicomp = ESMF_SciCompCreate(name="AtmosAdvection", rc=rc)

call ESMF_AttributeAdd(adv_scicomp,  &
                       convention=convCIM, purpose=purpComp, &
                       attpack=attpack, rc=rc)

call ESMF_AttributeSet(adv_scicomp, "ShortName", "AtmosAdvection", &
                       attpack=attpack, rc=rc)
call ESMF_AttributeSet(adv_scicomp, "LongName", "Atmosphere Advection", &
                       attpack=attpack, rc=rc)

adv_sciPropAtt(1) = 'TracersSchemeName'
adv_sciPropAtt(2) = 'TracersSchemeCharacteristics'
adv_sciPropAtt(3) = 'MomentumSchemeName'

call ESMF_AttributeAdd(adv_scicomp,  &
                       convention=convCIM, purpose=purpSci, &
                       attrList=adv_sciPropAtt, &
                       attpack=attpack, rc=rc)

call ESMF_AttributeSet(adv_scicomp, 'TracersSchemeName', 'Prather', &
                       attpack=attpack, rc=rc)
call ESMF_AttributeSet(adv_scicomp, 'TracersSchemeCharacteristics', &
                       'modified Euler', &
                       attpack=attpack, rc=rc)
call ESMF_AttributeSet(adv_scicomp, 'MomentumSchemeName', 'Van Leer', &
                       attpack=attpack, rc=rc)

!
! Atmosphere Radiation Science Component
!
rad_scicomp = ESMF_SciCompCreate(name="AtmosRadiation", rc=rc)

call ESMF_AttributeAdd(rad_scicomp,  &
                       convention=convCIM, purpose=purpComp, &
                       attpack=attpack, rc=rc)

call ESMF_AttributeSet(rad_scicomp, "ShortName", "AtmosRadiation", &
                       attpack=attpack, rc=rc)
call ESMF_AttributeSet(rad_scicomp, "LongName", &
                       "Atmosphere Radiation", &
                       attpack=attpack, rc=rc)

rad_sciPropAtt(1) = 'LongwaveSchemeType'
rad_sciPropAtt(2) = 'LongwaveSchemeMethod'

call ESMF_AttributeAdd(rad_scicomp,  &
                       convention=convCIM, purpose=purpSci, &
                       attrList=rad_sciPropAtt, &
                       attpack=attpack, rc=rc)
```

```
call ESMF_AttributeSet(rad_scicomp, &
                       'LongwaveSchemeType', &
                       'wide-band model', &
                       attpack=attpack, rc=rc)
call ESMF_AttributeSet(rad_scicomp, &
                       'LongwaveSchemeMethod', &
                       'two-stream', &
                       attpack=attpack, rc=rc)
```

Finally, destroy all of the Components.

```
call ESMF_SciCompDestroy(rad_scicomp, rc=rc)
call ESMF_SciCompDestroy(adv_scicomp, rc=rc)
call ESMF_SciCompDestroy(dc_scicomp, rc=rc)
call ESMF_GridCompDestroy(atmcomp, rc=rc)
call ESMF_GridCompDestroy(ocncomp, rc=rc)
call ESMF_CplCompDestroy(cplcomp, rc=rc)
```

19.3 Restrictions and Future Work

1. **None.**

19.4 Class API

19.4.1 ESMF_SciCompAssignment(=) - SciComp assignment

INTERFACE:

```
interface assignment(=)
scicomp1 = scicomp2
```

ARGUMENTS:

```
type(ESMF_SciComp) :: scicomp1
type(ESMF_SciComp) :: scicomp2
```

DESCRIPTION:

Assign scicomp1 as an alias to the same ESMF SciComp object in memory as scicomp2. If scicomp2 is invalid, then scicomp1 will be equally invalid after the assignment.

The arguments are:

scicomp1 The `ESMF_SciComp` object on the left hand side of the assignment.

scicomp2 The `ESMF_SciComp` object on the right hand side of the assignment.

19.4.2 ESMF_SciCompOperator(==) - SciComp equality operator

INTERFACE:

```
interface operator(==)
  if (scicomp1 == scicomp2) then ... endif
            OR
  result = (scicomp1 == scicomp2)
```

RETURN VALUE:

```
logical :: result
```

ARGUMENTS:

```
type(ESMF_SciComp), intent(in) :: scicomp1
type(ESMF_SciComp), intent(in) :: scicomp2
```

DESCRIPTION:

Test whether scicomp1 and scicomp2 are valid aliases to the same ESMF SciComp object in memory. For a more general comparison of two ESMF SciComps, going beyond the simple alias test, the ESMF_SciCompMatch() function (not yet implemented) must be used.

The arguments are:

scicomp1 The `ESMF_SciComp` object on the left hand side of the equality operation.

scicomp2 The `ESMF_SciComp` object on the right hand side of the equality operation.

19.4.3 ESMF_SciCompOperator(/=) - SciComp not equal operator

INTERFACE:

```
interface operator(/=)
  if (scicomp1 /= scicomp2) then ... endif
            OR
  result = (scicomp1 /= scicomp2)
```

RETURN VALUE:

```
logical :: result
```

ARGUMENTS:

```
type(ESMF_SciComp), intent(in) :: scicomp1
type(ESMF_SciComp), intent(in) :: scicomp2
```

DESCRIPTION:

Test whether scicomp1 and scicomp2 are *not* valid aliases to the same ESMF SciComp object in memory. For a more general comparison of two ESMF SciComps, going beyond the simple alias test, the ESMF_SciCompMatch() function (not yet implemented) must be used.

The arguments are:

scicomp1 The `ESMF_SciComp` object on the left hand side of the non-equality operation.

scicomp2 The `ESMF_SciComp` object on the right hand side of the non-equality operation.

19.4.4 ESMF_SciCompCreate - Create a SciComp

INTERFACE:

```
recursive function ESMF_SciCompCreate(name, rc)
```

RETURN VALUE:

```
type(ESMF_SciComp) :: ESMF_SciCompCreate
```

ARGUMENTS:

```
-- The following arguments require argument keyword syntax (e.g. rc=rc). --
    character(len=*),        intent(in),    optional :: name
    integer,                 intent(out),   optional :: rc
```

DESCRIPTION:

This interface creates an `ESMF_SciComp` object. The return value is the new `ESMF_SciComp`.

The arguments are:

[name] Name of the newly-created `ESMF_SciComp`. This name can be altered from within the `ESMF_SciComp` code once the initialization routine is called.

[rc] Return code; equals `ESMF_SUCCESS` if there are no errors.

19.4.5 ESMF_SciCompDestroy - Release resources associated with a SciComp

INTERFACE:

```
subroutine ESMF_SciCompDestroy(scicomp, rc)
```

ARGUMENTS:

```
     type(ESMF_SciComp), intent(inout)           :: scicomp
 -- The following arguments require argument keyword syntax (e.g. rc=rc). --
     integer,             intent(out),  optional :: rc
```

DESCRIPTION:

Destroys an `ESMF_SciComp`, releasing the resources associated with the object.

The arguments are:

scicomp Release all resources associated with this `ESMF_SciComp` and mark the object as invalid. It is an error to pass this object into any other routines after being destroyed.

[rc] Return code; equals `ESMF_SUCCESS` if there are no errors.

19.4.6 ESMF_SciCompGet - Get SciComp information

INTERFACE:

```
   subroutine ESMF_SciCompGet(scicomp, name, rc)
```

ARGUMENTS:

```
     type(ESMF_SciComp),       intent(in)            :: scicomp
 -- The following arguments require argument keyword syntax (e.g. rc=rc). --
     character(len=*),         intent(out), optional :: name
     integer,                  intent(out), optional :: rc
```

DESCRIPTION:

Get information about an `ESMF_SciComp` object.

The arguments are:

scicomp The `ESMF_SciComp` object being queried.

[name] Return the name of the `ESMF_SciComp`.

[rc] Return code; equals `ESMF_SUCCESS` if there are no errors.

19.4.7 ESMF_SciCompIsCreated - Check whether a SciComp object has been created

INTERFACE:

```
function ESMF_SciCompIsCreated(scicomp, rc)
```

RETURN VALUE:

```
logical :: ESMF_SciCompIsCreated
```

ARGUMENTS:

```
     type(ESMF_SciComp), intent(in)            :: scicomp
 -- The following arguments require argument keyword syntax (e.g. rc=rc). --
     integer,             intent(out), optional :: rc
```

DESCRIPTION:

Return `.true.` if the `scicomp` has been created. Otherwise return `.false.`. If an error occurs, i.e. `rc /= ESMF_SUCCESS` is returned, the return value of the function will also be `.false.`.

The arguments are:

scicomp `ESMF_SciComp` queried.

[rc] Return code; equals `ESMF_SUCCESS` if there are no errors.

19.4.8 ESMF_SciCompPrint - Print SciComp information

INTERFACE:

```
subroutine ESMF_SciCompPrint(scicomp, rc)
```

ARGUMENTS:

```
     type(ESMF_SciComp), intent(in)             :: scicomp
 -- The following arguments require argument keyword syntax (e.g. rc=rc). --
     integer,             intent(out), optional :: rc
```

DESCRIPTION:

Prints information about an `ESMF_SciComp` to `stdout`.

The arguments are:

scicomp `ESMF_SciComp` to print.

[rc] Return code; equals `ESMF_SUCCESS` if there are no errors.

19.4.9 ESMF_SciCompSet - Set or reset information about the SciComp

INTERFACE:

```
subroutine ESMF_SciCompSet(scicomp, name, rc)
```

ARGUMENTS:

```
     type(ESMF_SciComp), intent(inout)          :: scicomp
 -- The following arguments require argument keyword syntax (e.g. rc=rc). --
     character(len=*),    intent(in),  optional :: name
     integer,             intent(out), optional :: rc
```

DESCRIPTION:

Sets or resets information about an `ESMF_SciComp`.

The arguments are:

scicomp `ESMF_SciComp` to change.

[name] Set the name of the `ESMF_SciComp`.

[rc] Return code; equals `ESMF_SUCCESS` if there are no errors.

19.4.10 ESMF_SciCompValidate - Check validity of a SciComp

INTERFACE:

```
subroutine ESMF_SciCompValidate(scicomp, rc)
```

ARGUMENTS:

```
     type(ESMF_SciComp), intent(in)             :: scicomp
 -- The following arguments require argument keyword syntax (e.g. rc=rc). --
     integer,             intent(out), optional :: rc
```

DESCRIPTION:

Currently all this method does is to check that the `scicomp` was created.

The arguments are:

scicomp `ESMF_SciComp` to validate.

[rc] Return code; equals `ESMF_SUCCESS` if there are no errors.

20 Fault-tolerant Component Tunnel

20.1 Description

For ensemble runs with many ensemble members, fault-tolerance becomes an issue of very critical practical impact. The meaning of *fault-tolerance* in this context refers to the ability of an ensemble application to continue with normal execution after one or more ensemble members have experienced catastrophic conditions, from which they cannot recover. ESMF implements this type of fault-tolerance on the Component level via a **timeout** paradigm: A timeout parameter is specified for all interactions that need to be fault-tolerant. When a connection to a component times out, maybe because it has become inaccessible due to some catastrophic condition, the driver application can react to this condition, for example by not further interacting with the component during the otherwise normal continuation of the model execution.

The fault-tolerant connection between a driver application and a Component is established through a **Component Tunnel**. There are two sides to a Component Tunnel: the "actual" side is where the component is actually executing, and the "dual" side is the portal through which the Component becomes accessible on the driver side. Both the actual and the dual side of a Component Tunnel are implemented in form of a regular ESMF Gridded or Coupler Component.

Component Tunnels between Components can be based on a number of low level implementations. The only implementation that currently provides fault-tolerance is *socket* based. In this case an actual Component typically runs as a separate executable, listening to a specific port for connections from the driver application. The dual Component is created on the driver side. It connects to the actual Component during the SetServices() call.

20.2 Use and Examples

A Component Tunnel connects a *dual* Component to an *actual* Component. This connection can be based on a number of different low level implementations, e.g. VM-based or socket-based. VM-based Component Tunnels require that both dual and actual Components run within the same application (i.e. execute under the same MPI_COMM_WORLD). Fault-tolerant Component Tunnels require that dual and actual Components run in separate applications, under different MPI_COMM_WORLD communicators. This mode is implemented in the socket-based Component Tunnels.

20.2.1 Creating an *actual* Component

The creation process of an *actual* Gridded Component, which will become one of the two end points of a Component Tunnel, is identical to the creation of a regular Gridded Component. On the actual side, an actual Component is very similar to a regular Component. Here the actual Component is created with a custom `petList`.

```
petList = (/0,1,2/)
actualComp = ESMF_GridCompCreate(petList=petList, name="actual", rc=rc)
```

20.2.2 Creating a *dual* Component

The same way an actual Component appears as a regular Component in the context of the actual side application, a *dual* Component is created as a regular Component on the dual side. A dual Gridded Component with custom `petList` is created using the regular create call.

```
petList = (/4,3,5/)
dualComp = ESMF_GridCompCreate(petList=petList, name="dual", rc=rc)
```

20.2.3 Setting up the *actual* side of a Component Tunnel

After creation, the regular procedure for registering the standard Component methods is followed for the actual Gridded Component.

```
call ESMF_GridCompSetServices(actualComp, userRoutine=setservices, &
  userRc=userRc, rc=rc)
```

So far the `actualComp` object is no different from a regular Gridded Component. In order to turn it into the *actual* end point of a Component Tunnel the `ServiceLoop()` method is called. Here the socket-based implementation is chosen.

```
call ESMF_GridCompServiceLoop(actualComp, port=61010, timeout=20, rc=rc)
```

This call opens the actual side of the Component Tunnel in form of a socket-based server, listening on `port` 61010. The `timeout` argument specifies how long the actual side will wait for the dual side to connect, before the actual side returns with a time out condition. The time out is set to 20 seconds.

At this point, before a dual Component connects to the other side of the Component Tunnel, it is possible to manually connect to the waiting actual Component. This can be useful when debugging connection issues. A convenient tool for this is the standard `telnet` application. Below is a transcript of such a connection. The manually typed commands are separate from the previous responses by a blank line.

```
$ telnet localhost 61010
Trying 127.0.0.1...
Connected to localhost.
Escape character is '^]'.
Hello from ESMF Actual Component server!

date
Tue Apr  3 21:53:03 2012

version
ESMF_VERSION_STRING: 5.3.0
```

If at any point the `telnet` session is manually shut down, the `ServiceLoop()` on the actual side will return with an error condition. The clean way to disconnect the `telnet` session, and to have the `ServiceLoop()` wait for a new connection, e.g. from a dual Component, is to send the `reconnect` command. This will automatically shut down the `telnet` connection.

```
reconnect
Actual Component server will reconnect now!
Connection closed by foreign host.
$
```

At this point the actual Component is back in listening mode, with a time out of 20 seconds, as specified during the ServiceLoop() call.

Before moving on to the dual side of the GridComp based Component Tunnel example, it should be pointed out that the exact same procedure is used to set up the actual side of a *CplComp* based Component Tunnel. Assuming that `actualCplComp` is a CplComp object for which SetServices has already been called, the actual side uses `ESMF_CplCompServiceLoop()` to start listening for connections from the dual side.

```
call ESMF_CplCompServiceLoop(actualCplComp, port=61011, timeout=2, &
  timeoutFlag=timeoutFlag, rc=rc)
```

Here the `timeoutFlag` is specified in order to prevent the expected time-out condition to be indicated through the return code. Instead, when `timeoutFlag` is present, the return code is still `ESMF_SUCCESS`, but `timeoutFlag` is set to `.true.` when a time-out occurs.

20.2.4 Setting up the *dual* side of a Component Tunnel

On the dual side, the `dualComp` object needs to be connected to the actual Component in order to complete the Component Tunnel. Instead of registering standard Component methods locally, a special variant of the `SetServices()` call is used to connect to the actual Component.

```
call ESMF_GridCompSetServices(dualComp, port=61010, server="localhost", &
  timeout=10, timeoutFlag=timeoutFlag, rc=rc)
```

The `port` and `server` arguments are used to connect to the desired actual Component. The time out of 10 seconds ensures that if the actual Component is not available, a time out condition is returned instead of resulting in a hang. The `timeoutFlag` argument further absorbs the time out condition, either returning as `.true.` or `.false.`. In this mode the standard `rc` will indicate success even when a time out condition was reached.

20.2.5 Invoking standard Component methods through a Component Tunnel

Once a Component Tunnel is established, the actual Component is fully under the control of the dual Component. A standard Component method invoked on the dual Component is not executed by the dual Component itself, but by the actual Component instead. In fact, it is the entry points registered with the actual Component that are executed when standard methods are invoked on the dual Component. The connected `dualComp` object serves as a portal through which the connected `actualComp` becomes accessible on the dual side.

Typically the first standard method called is the `CompInitialize()` routine.

```
call ESMF_GridCompInitialize(dualComp, timeout=10, timeoutFlag=timeoutFlag, &
  userRc=userRc, rc=rc)
```

Again, the `timeout` argument serves to prevent the dual side from hanging if the actual Component application has experienced a catastrophic condition and is no longer available, or takes longer than expected. The presence of the `timeoutFlag` allows time out conditions to be caught gracefully, so the dual side can deal with it in an orderly fashion, instead of triggering an application abort due to an error condition.

The `CompRun()` and `CompFinalize()` methods follow the same format.

```
call ESMF_GridCompRun(dualComp, timeout=10, timeoutFlag=timeoutFlag, &
  userRc=userRc, rc=rc)

call ESMF_GridCompFinalize(dualComp, timeout=10, timeoutFlag=timeoutFlag, &
  userRc=userRc, rc=rc)
```

20.2.6 The non-blocking option to invoke standard Component methods through a Component Tunnel

Standard Component methods called on a connected dual Component are executed on the actual side, across the PETs of the actual Component. By default the dual Component PETs are blocked until the actual Component has

finished executing the invoked Component method, or until a time out condition has been reached. In many practical applications a more loose synchronization between dual and actual Components is useful. Having the PETs of a dual Component return immediately from a standard Component method allows multiple dual Component, on the same PETs, to control multiple actual Components. If the actual Components are executing in separate executables, or the same executable but on exclusive sets of PETs, they can execute concurrently, even with the controlling dual Components all running on the same PETs. The non-blocking dual side regains control over the actual Component by synchronizing through the CompWait() call.

Any of the standard Component methods can be called in non-blocking mode by setting the optional `syncflag` argument to `ESMF_SYNC_NONBLOCKING`.

```
call ESMF_GridCompInitialize(dualComp, syncflag=ESMF_SYNC_NONBLOCKING, rc=rc)
```

If communication between the dual and the actual Component was successful, this call will return immediately on all of the dual Component PETs, while the actual Component continues to execute the invoked Component method. However, if the dual Component has difficulties reaching the actual Component, the call will block on all dual PETs until successful contact was made, or the default time out (3600 seconds, i.e. 1 hour) has been reached. In most cases a shorter time out condition is desired with the non-blocking option, as shown below.

First the dual Component must wait for the outstanding method.

```
call ESMF_GridCompWait(dualComp, rc=rc)
```

Now the same non-blocking CompInitialize() call is issued again, but this time with an explicit 10 second time out.

```
call ESMF_GridCompInitialize(dualComp, syncflag=ESMF_SYNC_NONBLOCKING, &
  timeout=10, timeoutFlag=timeoutFlag, rc=rc)
```

This call is guaranteed to return within 10 seconds, or less, on the dual Component PETs, either without time out condition, indicating that the actual Component has been contacted successfully, or with time out condition, indicating that the actual Component was unreachable at the time. Either way, the dual Component PETs are back under user control quickly.

Calling the CompWait() method on the dual Component causes the dual Component PETs to block until the actual Component method has returned, or a time out condition has been reached.

```
call ESMF_GridCompWait(dualComp, userRc=userRc, rc=rc)
```

The default time out for CompWait() is 3600 seconds, i.e. 1 hour, just like for the other Component methods. However, the semantics of a time out condition under CompWait() is different from the other Component methods. Typically the `timeout` is simply the maximum time that any communication between dual and actual Component is allowed to take before a time out condition is raised. For CompWait(), the `timeout` is the maximum time that an actual Component is allowed to execute before reporting back to the dual Component. Here, even with the default time out, the dual Component would return from CompWait() immediately with a time out condition if the actual Component has already been executing for over 1 hour, and is not already waiting to report back when the dual Component calls CompWait(). On the other hand, if it has only been 30 minutes since CompInitialize() was called on the dual Component, then the actual Component still has 30 minutes before CompWait() returns with a time out condition. During this time (or until the actual Component returns) the dual Component PETs are blocked.

A standard Component method is invoked in non-blocking mode.

```
call ESMF_GridCompRun(dualComp, syncflag=ESMF_SYNC_NONBLOCKING, &
  timeout=10, timeoutFlag=timeoutFlag, rc=rc)
```

Once the user code on the dual side is ready to regain control over the actual Component it calls CompWait() on the dual Component. Here a `timeout` of 60s is specified, meaning that the total execution time the actual Component spends in the registered Run() routine may not exceed 60s before CompWait() returns with a time out condition.

```
call ESMF_GridCompWait(dualComp, timeout=60, userRc=userRc, rc=rc)
```

20.2.7 Destroying a connected *dual* Component

A dual Component that is connected to an actual Component through a Component Tunnel is destroyed the same way a regular Component is. The only difference is that a connected dual Component may specify a `timeout` argument to the `CompDestroy()` call.

```
call ESMF_GridCompDestroy(dualComp, timeout=10, rc=rc)
```

The `timeout` argument again ensures that the dual side does not hang indefinitely in case the actual Component has become unavailable. If the actual Component is available, the destroy call will indicate to the actual Component that it should break out of the `ServiceLoop()`. Either way, the local dual Component is destroyed.

20.2.8 Destroying a connected *actual* Component

An actual Component that is in a `ServiceLoop()` must first return from that call before it can be destroyed. This can either happen when a connected dual Component calls its `CompDestroy()` method, or if the `ServiceLoop()` reaches the specified time out condition. Either way, once control has been returned to the user code, the actual Component is destroyed in the same way a regular Component is, by calling the destroy method.

```
call ESMF_GridCompDestroy(actualComp, rc=rc)
```

20.3 Restrictions and Future Work

1. **No data flow through States.** The current implementation does not support data flow (Fields, FieldBundles, etc.) between actual and dual Components. The current work-around is to employ user controlled, file based transfer methods. The next implementation phase will offer transparent data flow through the Component Tunnel, where the user code interacts with the States on the actual and dual side in the same way as if they were the same Component.

21 State Class

21.1 Description

A State contains the data and metadata to be transferred between ESMF Components. It is an important class, because it defines a standard for how data is represented in data transfers between Earth science components. The State construct is a rational compromise between a fully prescribed interface - one that would dictate what specific fields should be transferred between components - and an interface in which data structures are completely ad hoc.

There are two types of States, import and export. An import State contains data that is necessary for a Gridded Component or Coupler Component to execute, and an export State contains the data that a Gridded Component or Coupler Component can make available.

States can contain Arrays, ArrayBundles, Fields, FieldBundles, and other States. They cannot directly contain native language arrays (i.e. Fortran or C style arrays). Objects in a State must span the VM on which they are running. For sequentially executing components which run on the same set of PETs this happens by calling the object create methods on each PET, creating the object in unison. For concurrently executing components which are running on subsets of PETs, an additional method, called `ESMF_StateReconcile()`, is provided by ESMF to broadcast information about objects which were created in sub-components.

State methods include creation and deletion, adding and retrieving data items, adding and retrieving attributes, and performing queries.

21.2 Constants

21.2.1 ESMF_STATEINTENT

DESCRIPTION:
Specifies whether a `ESMF_State` contains data to be imported into a component or exported from a component.

The type of this flag is:

`type(ESMF_StateIntent_Flag)`

The valid values are:

ESMF_STATEINTENT_IMPORT Contains data to be imported into a component.

ESMF_STATEINTENT_EXPORT Contains data to be exported out of a component.

ESMF_STATEINTENT_INTERNAL Contains data that is not exposed outside of a component.

ESMF_STATEINTENT_UNSPECIFIED The intent has not been specified.

21.2.2 ESMF_STATEITEM

DESCRIPTION:
Specifies the type of object being added to or retrieved from an ESMF_State.

The type of this flag is:

`type(ESMF_StateItem_Flag)`

The valid values are:

ESMF_STATEITEM_ARRAY Refers to an `ESMF_Array` within an `ESMF_State`.

ESMF_STATEITEM_ARRAYBUNDLE Refers to an `ESMF_Array` within an `ESMF_State`.

ESMF_STATEITEM_FIELD Refers to a `ESMF_Field` within an `ESMF_State`.

ESMF_STATEITEM_FIELDBUNDLE Refers to a `ESMF_FieldBundle` within an `ESMF_State`.

ESMF_STATEITEM_ROUTEHANDLE Refers to a `ESMF_RouteHandle` within an `ESMF_State`.

ESMF_STATEITEM_STATE Refers to a `ESMF_State` within an `ESMF_State`.

21.3 Use and Examples

A Gridded Component generally has one associated import State and one export State. Generally the States associated with a Gridded Component will be created by the Gridded Component's parent component. In many cases, the States will be created containing no data. Both the empty States and the newly created Gridded Component are passed by the parent component into the Gridded Component's initialize method. This is where the States get prepared for use and the import State is first filled with data.

States can be filled with data items that do not yet have data allocated. Fields, FieldBundles, Arrays, and ArrayBundles each have methods that support their creation without actual data allocation - the Grid and Attributes are set up but no Fortran array of data values is allocated. In this approach, when a State is passed into its associated Gridded Component's initialize method, the incomplete Arrays, Fields, FieldBundles, and ArrayBundles within the State can allocate or reference data inside the initialize method.

States are passed through the interfaces of the Gridded and Coupler Components' run methods in order to carry data between the components. While we expect a Gridded Component's import State to be filled with data during initialization, its export State will typically be filled over the course of its run method. At the end of a Gridded Component's run method, the filled export State is passed out through the argument list into a Coupler Component's run method. We recommend the convention that it enters the Coupler Component as the Coupler Component's import State. Here the data is transformed into a form that another Gridded Component requires, and passed out of the Coupler Component as its export State. It can then be passed into the run method of a recipient Gridded Component as that component's import State.

While the above sounds complicated, the rule is simple: a State going into a component is an import State, and a State leaving a component is an export State.

Objects inside States are normally created in *unison* where each PET executing a component makes the same object create call. If the object contains data, like a Field, each PET may have a different local chunk of the entire dataset but each Field has the same name and is logically one part of a single distributed object. As States are passed between components, if any object in a State was not created in unison on all the current PETs then some PETs have no object to pass into a communication method (e.g. regrid or data redistribution). The `ESMF_StateReconcile()` method must be called to broadcast information about these objects to all PETs in a component; after which all PETs have a single uniform view of all objects and metadata.

If components are running in sequential mode on all available PETs and States are being passed between them there is no need to call `ESMF_StateReconcile` since all PETs have a uniform view of the objects. However, if components are running on a subset of the PETs, as is usually the case when running in concurrent mode, then when States are passed into components which contain a superset of those PETs, for example, a Coupler Component, all PETs must call `ESMF_StateReconcile` on the States before using them in any ESMF communication methods. The reconciliation process broadcasts information about objects which exist only on a subset of the PETs. On PETs missing those objects it creates a *proxy* object which contains any qualities of the original object plus enough information for it to be a data source or destination for a regrid or data redistribution operation.

21.3.1 Create a State and add items

Creation of an empty `ESMF_State`. Then adding an `ESMF_FieldBundle` to it. Note that the `ESMF_FieldBundle` is empty. The `ESMF_State` only contains a reference to the objects it contains. It does not make a copy; the original objects can be updated and code accessing them by using the `ESMF_State` will see the updated version.

```
state = ESMF_StateCreate(name="Ocean", &
  stateintent=ESMF_STATEINTENT_EXPORT, rc=rc)
```

```
bundle = ESMF_FieldBundleCreate(name="Surface Fields", rc=rc)

call ESMF_StateAdd(state, [bundle], rc=rc)
```

21.3.2 Query a State for items and add more items

The objects contained in a State can be queried by name.

```
call ESMF_StateGet(state, itemName="Surface Fields", fieldbundle=bundle, &
  rc=rc)
```

More objects can be created and added to the State. Here an empty Field is created and added to the State.

```
field = ESMF_FieldEmptyCreate(name="MyField", rc=rc)

call ESMF_StateAdd(state, [field], rc=rc)
```

Multiple objects of the same type can be added to the State at the same time.

```
field1 = ESMF_FieldEmptyCreate(name="field1", rc=rc)

field2 = ESMF_FieldEmptyCreate(name="field2", rc=rc)

call ESMF_StateAdd(state, [field1, field2], rc=rc)
```

21.3.3 Removing items from a State

Objects contained in a State can be removed using the item name.

```
call ESMF_StateRemove(state, ["field1"], rc=rc)
```

Notice that objects removed from a State are *not* destroyed by the `ESMF_StateRemove()` call. They must be destroyed explicitly when no longer needed.

```
call ESMF_FieldDestroy(field1, rc=rc)
```

21.3.4 Destroy a State

Once an `ESMF_State` is not longer needed, it should be destroyed.

```
call ESMF_StateDestroy(state, rc=rc)
```

Notice that objects contained in a State are *not* destroyed by the `ESMF_StateDestroy()` call. They must be destroyed explicitly when no longer needed.

```
call ESMF_FieldBundleDestroy(bundle, rc=rc)

call ESMF_FieldDestroy(field, rc=rc)

call ESMF_FieldDestroy(field2, rc=rc)
```

21.3.5 Reconcile a State

An `ESMF_State` object must be reconciled if it contains objects that were created and added to the State on a subset of the PETs from which the objects are now accessed and operated on. A typical case of this is when a State object is passed to a component that runs on a subset of PETs, and that component creates objects that are added to the State. After the component passes control back to the larger calling context (a parent component or the main program), the State object is not consistent across PETs. The `ESMF_StateReconcile()` method is used to reconcilce the State across all PETs.

In order to demonstrate State reconciliation we need to set up at least one component that can be run on a subset of PETs. To this end an external routine is created that adds a few emtpy Fields into its `exportState`.

```
subroutine init(gcomp, importState, exportState, clock, rc)
  ! Abide to ESMF-prescribed Fortran interface
  type(ESMF_GridComp)  :: gcomp
  type(ESMF_State)     :: importState, exportState
  type(ESMF_Clock)     :: clock
  integer, intent(out) :: rc

  type(ESMF_Field) :: field1, field2, field3

  rc = ESMF_SUCCESS   ! indicate success... unless error is found

  field1 = ESMF_FieldEmptyCreate(name="Field1", rc=rc)
  if (ESMF_LogFoundError(rcToCheck=rc, msg=ESMF_LOGERR_PASSTHRU, &
    line=__LINE__, file=__FILE__)) return

  field2 = ESMF_FieldEmptyCreate(name="Field2", rc=rc)
  if (ESMF_LogFoundError(rcToCheck=rc, msg=ESMF_LOGERR_PASSTHRU, &
    line=__LINE__, file=__FILE__)) return

  field3 = ESMF_FieldEmptyCreate(name="Field3", rc=rc)
  if (ESMF_LogFoundError(rcToCheck=rc, msg=ESMF_LOGERR_PASSTHRU, &
    line=__LINE__, file=__FILE__)) return

  call ESMF_StateAdd(exportState, [field1, field2, field3], rc=rc)
  if (ESMF_LogFoundError(rcToCheck=rc, msg=ESMF_LOGERR_PASSTHRU, &
    line=__LINE__, file=__FILE__)) return

end subroutine init
```

The standard way to register ESMF component routines is in the `SetServices` routine.

```
subroutine SetServices(gcomp, rc)
 ! Abide to ESMF-prescribed Fortran interface
 type(ESMF_GridComp)  :: gcomp
 integer, intent(out) :: rc

  rc = ESMF_SUCCESS   ! indicate success... unless error is found

  ! register 'init' as component initialization method
  call ESMF_GridCompSetEntryPoint(gcomp, ESMF_METHOD_INITIALIZE, &
    userRoutine=init, rc=rc)
  if (ESMF_LogFoundError(rcToCheck=rc, msg=ESMF_LOGERR_PASSTHRU, &
    line=__LINE__, file=__FILE__)) return
```

```
  end subroutine SetServices
```

A component can now be created in the main program that uses these routines.

```
  program ESMF_StateReconcileEx

!   ... other local variables ...
    type(ESMF_GridComp) :: comp

    comp = ESMF_GridCompCreate(name="MyComp", petList=[0,1], rc=rc)
```

Here `comp` is created to execute on two PETs: 0 and 1.

Next the Component `SetServices` method is called to register the custom component method(s).

```
    call ESMF_GridCompSetServices(comp, userRoutine=SetServices, rc=rc)
```

Now a State is created that can be passed in when the registered Component method is called.

```
    state = ESMF_StateCreate(rc=rc)
```

The `state` object is used as the Component's `exportState`.

```
    call ESMF_GridCompInitialize(comp, exportState=state, rc=rc)
```

Once control of execution has returned from the pevious `ESMF_GridCompInitialize()` call, the `state` object is in an inconsistent state across the PETs of the current (main program) context. This is because Fields were added on PETs 0 and 1, but not on the remaining PETs (2 and 3). This situation can easliy be observed by writing the current `state` to the ESMF log.

```
    call ESMF_StateLog(state, prefix="Before Reconcile:", rc=rc)
```

To reconcile `state` across all of the PETs, use the `ESMF_StateReconcile()` method.

```
    call ESMF_StateReconcile(state, rc=rc)
```

The output of `state` to the ESMF log shows that the object is now consistent across all PETs. I.e. `state` contains identical items on all of the PETs.

```
    call ESMF_StateLog(state, prefix="After Reconcile:", rc=rc)

end program ESMF_StateReconcileEx
```

21.4 Restrictions and Future Work

1. **No synchronization of object IDs at object create time - Unison Rule:** Object IDs are used during the reconcile process to identify objects which are unknown to some subset of the PETs in the currently running VM. Object IDs are assigned in sequential order at object create time across the context of the current VM without communication. This design was requested by the user community during ESMF object design to reduce communication and synchronization overhead when creating distributed ESMF objects. As a consequence it is required to create distributed ESMF objects in **unison** across all PETs of the current VM in order to keep the ESMF object identification in sync.

   Violation of the unison rule will lead to undefined behavior when reconciling a State that contains objects with inconsistent object IDs.

2. **Info keys on top level State not reconciled without actual objects present from the relevant sub-context.** One of the actions of the `ESMF_StateReconcile()` method is to reconcile the Info keys of the State object itself. The endresult is that the reconciled State has the same Info *keys* on all of the PETs of the VM across which it was reconciled – albeit with potentially different values across PETs (see the `ESMF_StateReconcile()` API doc for more details). An edge case for which `ESMF_StateReconcile()` does **not** provide Info key reconcilation is when keys were added under a component executing on a subset of PETs (compared to the reconciling VM), but no actual object (Field, FieldBundle, Array, ArrayBundle, or nested State) was added under the VM of that sub-context.

   The situation of unreconciled Info keys across PETs for an ESMF State is not an error condition per-se, however, it can lead to unexpected behavior in downstream code. Specifically if such code expects to find consistent Info keys across all PETs. If this is the case, care should be taken to ensure actual objects are added to the top level State on the sub-context PETs where new Info keys are added.

21.5 Design and Implementation Notes

1. States contain the name of the associated Component, a flag for Import or Export, and a list of data objects, which can be a combination of FieldBundles, Fields, and/or Arrays. The objects must be named and have the proper attributes so they can be identified by the receiver of the data. For example, units and other detailed information may need to be associated with the data as an Attribute.

2. Data contained in States must be created in unison on each PET of the current VM. This allows the creation process to avoid doing communications since each PET can compute any information it needs to know about any remote PET (for example, the grid distribute method can compute the decomposition of the grid on not only the local PET but also the remote PETs since it knows each PET is making the identical call). For all PETs to have a consistent view of the data this means objects must be given unique names when created, or all objects must be created in the same order on all PETs so ESMF can generate consistent default names for the objects.

   When running components on subsets of the original VM all the PETs can create consistent objects but then when they are put into a State and passed to a component with a different VM and a different set of PETs, a communication call (reconcile) must be made to communicate the missing information to the PETs which were not involved in the original object creation. The reconcile call broadcasts object lists; those PETs which are missing any objects in the total list can receive enough information to reconstruct a proxy object which contains all necessary information about that object, with no local data, on that PET. These proxy objects can be queried by ESMF routines to determine the amount of data and what PETs contain data which is destined to be moved to the local PET (for receiving data) and conversely, can determine which other PETs are going to receive data and how much (for sending data).

   For example, the FieldExcl system test creates 2 Gridded Components on separate subsets of PETs. They use the option of mapping particular, non-monotonic PETs to DEs. The following figures illustrate how the DEs are mapped in each of the Gridded Components in that test:

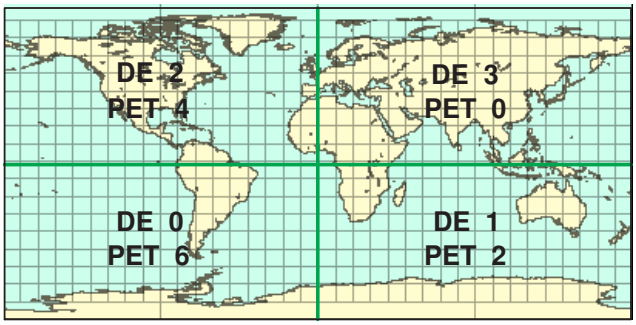

Source Grid Decomposition

Figure 7: The mapping of PETs (processors) to DEs (data) in the source grid created by `user_model1.F90` in the FieldExcl system test.

Destination Grid Decomposition

Figure 8: The mapping of PETs (processors) to DEs (data) in the destination grid created by `user_model2.F90` in the FieldExcl system test.

In the coupler code, all PETs must make the reconcile call before accessing data in the State. On PETs which already contain data, the objects are unchanged. On PETs which were not involved during the creation of the FieldBundles or Fields, the reconcile call adds an object to the State which contains all the same metadata associated with the object, but creates a slightly different Grid object, called a Proxy Grid. These PETs contain no local data, so the Array object is empty, and the DELayout for the Grid is like this:

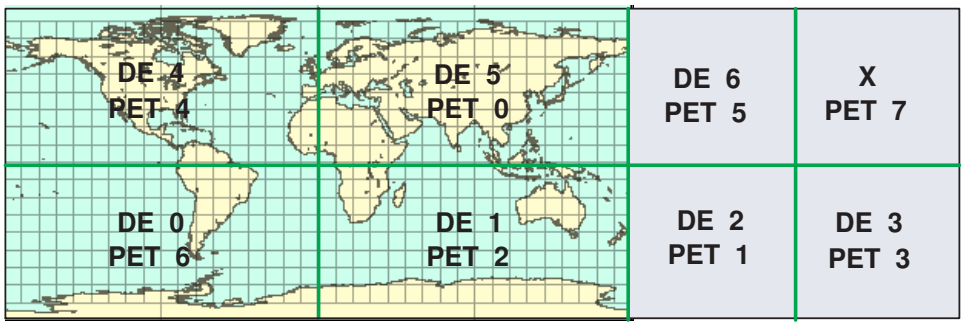

Proxy DELayout created by Framework for Source Grid Decomposition in Coupler

Figure 9: The mapping of PETs (processors) to DEs (data) in the source grid after the reconcile call in `user_coupler.F90` in the FieldExcl system test.

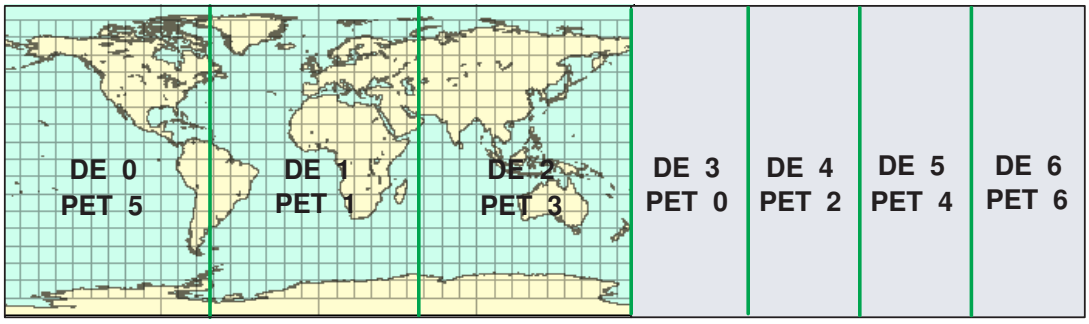

Proxy DELayout created by Framework for Destination Grid Decomposition in Coupler

Figure 10: The mapping of PETs (processors) to DEs (data) in the destination grid after the reconcile call in `user_coupler.F90` in the FieldExcl system test.

21.6 Object Model

The following is a simplified UML diagram showing the structure of the State class. States can contain FieldBundles, Fields, Arrays, or nested States. See Appendix A, *A Brief Introduction to UML*, for a translation table that lists the symbols in the diagram and their meaning.

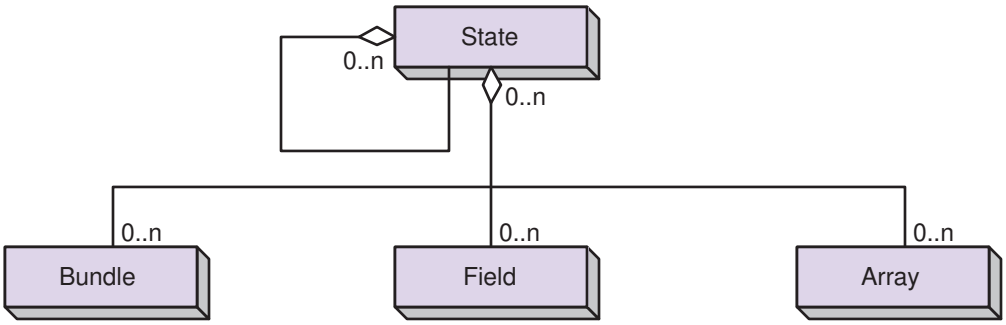

21.7 Class API

21.7.1 ESMF_StateAssignment(=) - State assignment

INTERFACE:

```
interface assignment(=)
state1 = state2
```

ARGUMENTS:

```
type(ESMF_State) :: state1
type(ESMF_State) :: state2
```

STATUS:

- This interface is backward compatible with ESMF versions starting at 5.2.0r. If code using this interface compiles with any version of ESMF starting with 5.2.0r, then it will compile with the current version.

DESCRIPTION:

Assign state1 as an alias to the same ESMF State object in memory as state2. If state2 is invalid, then state1 will be equally invalid after the assignment.

The arguments are:

state1 The `ESMF_State` object on the left hand side of the assignment.

state2 The `ESMF_State` object on the right hand side of the assignment.

21.7.2 ESMF_StateOperator(==) - State equality operator

INTERFACE:

```
interface operator(==)
if (state1 == state2) then ... endif
OR
result = (state1 == state2)
```

RETURN VALUE:

```
logical :: result
```

ARGUMENTS:

```
type(ESMF_State), intent(in) :: state1
type(ESMF_State), intent(in) :: state2
```

STATUS:

- This interface is backward compatible with ESMF versions starting at 5.2.0r. If code using this interface compiles with any version of ESMF starting with 5.2.0r, then it will compile with the current version.

DESCRIPTION:

Test whether state1 and state2 are valid aliases to the same ESMF State object in memory. For a more general comparison of two ESMF States, going beyond the simple alias test, the ESMF_StateMatch() function (not yet implemented) must be used.

The arguments are:

state1 The `ESMF_State` object on the left hand side of the equality operation.

state2 The `ESMF_State` object on the right hand side of the equality operation.

21.7.3 ESMF_StateOperator(/=) - State not equal operator

INTERFACE:

```
interface operator(/=)
if (state1 /= state2) then ... endif
OR
result = (state1 /= state2)
```

RETURN VALUE:

```
logical :: result
```

ARGUMENTS:

```
type(ESMF_State), intent(in) :: state1
type(ESMF_State), intent(in) :: state2
```

STATUS:

- This interface is backward compatible with ESMF versions starting at 5.2.0r. If code using this interface compiles with any version of ESMF starting with 5.2.0r, then it will compile with the current version.

DESCRIPTION:

Test whether state1 and state2 are *not* valid aliases to the same ESMF State object in memory. For a more general comparison of two ESMF States, going beyond the simple alias test, the ESMF_StateMatch() function (not yet implemented) must be used.

The arguments are:

state1 The `ESMF_State` object on the left hand side of the non-equality operation.

state2 The `ESMF_State` object on the right hand side of the non-equality operation.

21.7.4 ESMF_StateAdd - Add a list of items to a State

INTERFACE:

```
subroutine ESMF_StateAdd(state, <itemList>, relaxedFlag, rc)
```

ARGUMENTS:

```
  type(ESMF_State), intent(inout) :: state
  <itemList>, see below for supported values
-- The following arguments require argument keyword syntax (e.g. rc=rc). --
  logical, intent(in), optional :: relaxedFlag
  integer, intent(out), optional :: rc
```

STATUS:

- This interface is backward compatible with ESMF versions starting at 5.2.0r. If code using this interface compiles with any version of ESMF starting with 5.2.0r, then it will compile with the current version.

DESCRIPTION:

Add a list of items to a `ESMF_State`. It is an error if any item in <itemlist> already matches, by name, an item already contained in `state`.

Supported values for <itemList> are:

type(ESMF_Array), intent(in) :: arrayList(:)

type(ESMF_ArrayBundle), intent(in) :: arraybundleList(:)

type(ESMF_Field), intent(in) :: fieldList(:)

type(ESMF_FieldBundle), intent(in) :: fieldbundleList(:)

type(ESMF_RouteHandle), intent(in) :: routehandleList(:)

type(ESMF_State), intent(in) :: nestedStateList(:)

The arguments are:

state An `ESMF_State` to which the <itemList> will be added.

<itemList> The list of items to be added. This is a reference only; when the `ESMF_State` is destroyed the <itemList> items contained within it will not be destroyed. Also, the items in the <itemList> cannot be safely destroyed before the `ESMF_State` is destroyed. Since <itemList> items can be added to multiple containers, it remains the responsibility of the user to manage their destruction when they are no longer in use.

[relaxedflag] A setting of `.true.` indicates a relaxed definition of "add", where it is *not* an error if `<itemList>` contains items with names that are found in `state`. The `State` is left unchanged for these items. For `.false.` this is treated as an error condition. The default setting is `.false.`.

[rc] Return code; equals `ESMF_SUCCESS` if there are no errors.

21.7.5 ESMF_StateAddReplace - Add or replace a list of items to a State

INTERFACE:

```
subroutine ESMF_StateAddReplace(state, <itemList>, rc)
```

ARGUMENTS:

```
  type(ESMF_State), intent(inout) :: state
  <itemList>, see below for supported values
-- The following arguments require argument keyword syntax (e.g. rc=rc). --
  integer, intent(out), optional :: rc
```

STATUS:

- This interface is backward compatible with ESMF versions starting at 5.2.0r. If code using this interface compiles with any version of ESMF starting with 5.2.0r, then it will compile with the current version.

DESCRIPTION:

Add or replace a list of items to an `ESMF_State`. If an item in <itemList> does not match any items already present in `state`, it is added. Items with names already present in the `state` replace the existing item.

Supported values for <itemList> are:

type(ESMF_Array), intent(in) :: arrayList(:)

type(ESMF_ArrayBundle), intent(in) :: arraybundleList(:)

type(ESMF_Field), intent(in) :: fieldList(:)

type(ESMF_FieldBundle), intent(in) :: fieldbundleList(:)

type(ESMF_RouteHandle), intent(in) :: routehandleList(:)

type(ESMF_State), intent(in) :: nestedStateList(:)

The arguments are:

state An `ESMF_State` to which the <itemList> will be added or replaced.

<itemList> The list of items to be added or replaced. This is a reference only; when the `ESMF_State` is destroyed the <itemList> items contained within it will not be destroyed. Also, the items in the <itemList> cannot be safely destroyed before the `ESMF_State` is destroyed. Since <itemList> items can be added to multiple containers, it remains the responsibility of the user to manage their destruction when they are no longer in use.

[rc] Return code; equals `ESMF_SUCCESS` if there are no errors.

21.7.6 ESMF_StateCreate - Create a new State

INTERFACE:

```
function ESMF_StateCreate(stateIntent, &
             arrayList, arraybundleList, &
             fieldList, fieldbundleList, &
             nestedStateList, &
             routehandleList, name, vm, rc)
```

RETURN VALUE:

```
type(ESMF_State) :: ESMF_StateCreate
```

ARGUMENTS:

```
-- The following arguments require argument keyword syntax (e.g. rc=rc). --
      type(ESMF_StateIntent_Flag), intent(in), optional :: stateIntent
      type(ESMF_Array), intent(in), optional :: arrayList(:)
      type(ESMF_ArrayBundle), intent(in), optional :: arraybundleList(:)
      type(ESMF_Field), intent(in), optional :: fieldList(:)
      type(ESMF_FieldBundle), intent(in), optional :: fieldbundleList(:)
      type(ESMF_State), intent(in), optional :: nestedStateList(:)
      type(ESMF_RouteHandle), intent(in), optional :: routehandleList(:)
      character(len=*), intent(in), optional :: name
      type(ESMF_VM), intent(in), optional :: vm
      integer, intent(out), optional :: rc
```

STATUS:

- This interface is backward compatible with ESMF versions starting at 5.2.0r. If code using this interface compiles with any version of ESMF starting with 5.2.0r, then it will compile with the current version.
- This interface was modified since ESMF version 5.2.0r. The fact that code using this interface compiles with the current ESMF version does not guarantee that it compiles with previous versions of this interface. If user code compatibility with version 5.2.0r is desired then care must be taken to limit the use of this interface to features that were available in the 5.2.0r release.
  Changes made after the 5.2.0r release:

  8.1.0 Added argument `vm` to support object creation on a different VM than that of the current context.

DESCRIPTION:

Create a new `ESMF_State`, set default characteristics for objects added to it, and optionally add initial objects to it.

The arguments are:

[stateIntent] The intent, e.g. Import, Export, or Internal, of this `ESMF_State`. Possible values are listed in Section 21.2.1. The default is `ESMF_STATEINTENT_UNSPECIFIED`.

[arrayList] A list (Fortran array) of `ESMF_Array`s.

[arraybundleList] A list (Fortran array) of `ESMF_ArrayBundle`s.

[fieldList] A list (Fortran array) of `ESMF_Field`s.

[fieldbundleList] A list (Fortran array) of `ESMF_FieldBundle`s.

[nestedStateList] A list (Fortran array) of `ESMF_State`s to be nested inside the outer `ESMF_State`.

[routehandleList] A list (Fortran array) of `ESMF_RouteHandle`s.

[name] Name of this `ESMF_State` object. A default name will be generated if none is specified.

[vm] If present, the State object is created on the specified `ESMF_VM` object. The default is to create on the VM of the current component context.

[rc] Return code; equals `ESMF_SUCCESS` if there are no errors.

21.7.7 ESMF_StateDestroy - Release resources for a State

INTERFACE:

```
      recursive subroutine ESMF_StateDestroy(state, noGarbage, rc)
```

ARGUMENTS:

```
      type(ESMF_State), intent(inout) :: state
 -- The following arguments require argument keyword syntax (e.g. rc=rc). --
      logical, intent(in), optional :: noGarbage
      integer, intent(out), optional :: rc
```

STATUS:

- This interface is backward compatible with ESMF versions starting at 5.2.0r. If code using this interface compiles with any version of ESMF starting with 5.2.0r, then it will compile with the current version.
- This interface was modified since ESMF version 5.2.0r. The fact that code using this interface compiles with the current ESMF version does not guarantee that it compiles with previous versions of this interface. If user code compatibility with version 5.2.0r is desired then care must be taken to limit the use of this interface to features that were available in the 5.2.0r release.
  Changes made after the 5.2.0r release:

  8.1.0 Added argument `noGarbage`. The argument provides a mechanism to override the default garbage collection mechanism when destroying an ESMF object.

DESCRIPTION:

Releases resources associated with this `ESMF_State`. Actual objects added to `ESMF_States` will not be destroyed, it remains the responsibility of the user to destroy these objects in the correct context.

The arguments are:

state Destroy contents of this `ESMF_State`.

[noGarbage] If set to `.TRUE.` the object will be fully destroyed and removed from the ESMF garbage collection system. Note however that under this condition ESMF cannot protect against accessing the destroyed object through dangling aliases – a situation which may lead to hard to debug application crashes.

It is generally recommended to leave the `noGarbage` argument set to `.FALSE.` (the default), and to take advantage of the ESMF garbage collection system which will prevent problems with dangling aliases or incorrect sequences of destroy calls. However this level of support requires that a small remnant of the object is kept in memory past the destroy call. This can lead to an unexpected increase in memory consumption over the course of execution in applications that use temporary ESMF objects. For situations where the repeated creation and destruction of temporary objects leads to memory issues, it is recommended to call with `noGarbage` set to `.TRUE.`, fully removing the entire temporary object from memory.

[rc] Return code; equals `ESMF_SUCCESS` if there are no errors.

21.7.8 ESMF_StateGet - Get object-wide information from a State

INTERFACE:

```
! Private name; call using ESMF_StateGet()
subroutine ESMF_StateGetInfo(state, &
      itemSearch, itemorderflag, nestedFlag, &
      stateIntent, itemCount, itemNameList, itemTypeList, name, vm, rc)
```

ARGUMENTS:

```
      type(ESMF_State), intent(in) :: state
 -- The following arguments require argument keyword syntax (e.g. rc=rc). --
      character (len=*), intent(in), optional :: itemSearch
```

```
type(ESMF_ItemOrder_Flag), intent(in), optional :: itemorderflag
logical, intent(in), optional :: nestedFlag
type(ESMF_StateIntent_Flag), intent(out), optional :: stateIntent
integer, intent(out), optional :: itemCount
character (len=*), intent(out), optional :: itemNameList(:)
type(ESMF_StateItem_Flag), intent(out), optional :: itemTypeList(:)
character (len=*), intent(out), optional :: name
type(ESMF_VM), intent(out), optional :: vm
integer, intent(out), optional :: rc
```

STATUS:

- This interface is backward compatible with ESMF versions starting at 5.2.0r. If code using this interface compiles with any version of ESMF starting with 5.2.0r, then it will compile with the current version.
- This interface was modified since ESMF version 5.2.0r. The fact that code using this interface compiles with the current ESMF version does not guarantee that it compiles with previous versions of this interface. If user code compatibility with version 5.2.0r is desired then care must be taken to limit the use of this interface to features that were available in the 5.2.0r release.
  Changes made after the 5.2.0r release:

  6.1.0 Added argument `itemorderflag`. The new argument gives the user control over the order in which the items are returned.

  8.8.0 Added argument `vm` in order to offer information about the VM on which the State was created.

DESCRIPTION:

Returns the requested information about this `ESMF_State`. The optional `itemSearch` argument may specify the name of an individual item to search for. When used in conjunction with the `nestedFlag`, nested States will also be searched.

Typically, an `ESMF_StateGet()` information request will be performed twice. The first time, the `itemCount` argument will be used to query the size of arrays that are needed. Arrays can then be allocated to the correct size for `itemNameList` and `itemtypeList` as needed. A second call to `ESMF_StateGet()` will then fill in the values.

The arguments are:

state An `ESMF_State` object to be queried.

[itemSearch] Query objects by name in the State. When the `nestedFlag` option is set to .true., all nested States will also be searched for the specified name.

[itemorderflag] Specifies the order of the returned items in the `itemNameList` and `itemTypeList`. The default is `ESMF_ITEMORDER_ABC`. See 55.34 for a full list of options.

[nestedFlag] When set to `.false.`, returns information at the current State level only (default) When set to `.true.`, additionally returns information from nested States

[stateIntent] The intent, e.g. Import, Export, or Internal, of this `ESMF_State`. Possible values are listed in Section 21.2.1.

[itemCount] Count of items in this `ESMF_State`. When the `nestedFlag` option is set to `.true.`, the count will include items present in nested States. When using `itemSearch`, it will count the number of items matching the specified name.

[itemNameList] Array of item names in this `ESMF_State`. When the `nestedFlag` option is set to `.true.`, the list will include items present in nested States. When using `itemSearch`, it will return the names of items matching the specified name. `itemNameList` must be at least `itemCount` long.

[itemTypeList] Array of possible item object types in this `ESMF_State`. When the `nestedFlag` option is set to `.true.`, the list will include items present in nested States. When using `itemSearch`, it will return the types of items matching the specified name. Must be at least `itemCount` long. Return values are listed in Section 21.2.2.

[name] Returns the name of this `ESMF_State`.

[vm The VM on which the State object was created.

[rc] Return code; equals `ESMF_SUCCESS` if there are no errors.

21.7.9 ESMF_StateGet - Get information about an item in a State by item name

INTERFACE:

```
      ! Private name; call using ESMF_StateGet()
      subroutine ESMF_StateGetItemInfo(state, itemName, itemType, rc)
```

ARGUMENTS:

```
      type(ESMF_State), intent(in) :: state
      character (len=*), intent(in) :: itemName
      type(ESMF_StateItem_Flag), intent(out) :: itemType
 -- The following arguments require argument keyword syntax (e.g. rc=rc). --
      integer, intent(out), optional :: rc
```

STATUS:

- This interface is backward compatible with ESMF versions starting at 5.2.0r. If code using this interface compiles with any version of ESMF starting with 5.2.0r, then it will compile with the current version.

DESCRIPTION:

Returns the type for the item named `name` in this `ESMF_State`. If no item with this name exists, the value `ESMF_STATEITEM_NOTFOUND` will be returned and the error code will not be set to an error. Thus this routine can be used to safely query for the existence of items by name whether or not they are expected to be there. The error code will be set in case of other errors, for example if the `ESMF_State` itself is invalid.

The arguments are:

state `ESMF_State` to be queried.

itemName Name of the item to return information about.

itemType Returned item types for the item with the given name, including placeholder names. Options are listed in Section 21.2.2. If no item with the given name is found, `ESMF_STATEITEM_NOTFOUND` will be returned and `rc` will **not** be set to an error.

[rc] Return code; equals `ESMF_SUCCESS` if there are no errors.

21.7.10 ESMF_StateGet - Get an item from a State by item name

INTERFACE:

```
subroutine ESMF_StateGet(state, itemName, <item>, rc)
```

ARGUMENTS:

```
  type(ESMF_State), intent(in) :: state
  character (len=*), intent(in) :: itemName
  <item>, see below for supported values
-- The following arguments require argument keyword syntax (e.g. rc=rc). --
  integer, intent(out), optional :: rc
```

STATUS:

- This interface is backward compatible with ESMF versions starting at 5.2.0r. If code using this interface compiles with any version of ESMF starting with 5.2.0r, then it will compile with the current version.

DESCRIPTION:

Returns an <item> from an `ESMF_State` by item name. If the `ESMF_State` contains the <item> directly, only `itemName` is required.

If the `state` contains nested `ESMF_States`, the `itemName` argument may specify a fully qualified name to access the desired item with a single call. This is performed using the '/' character to separate the names of the intermediate State names leading to the desired item. (E.g., `itemName='state1/state12/item'`).

Supported values for <item> are:

type(ESMF_Array), intent(out) :: array

type(ESMF_ArrayBundle), intent(out) :: arraybundle

type(ESMF_Field), intent(out) :: field

type(ESMF_FieldBundle), intent(out) :: fieldbundle

type(ESMF_RouteHandle), intent(out) :: routehandle

type(ESMF_State), intent(out) :: nestedState

The arguments are:

state State to query for an <item> named `itemName`.

itemName Name of <item> to be returned. This name may be fully qualified in order to access nested State items.

<item> Returned reference to the <item>.

[rc] Return code; equals `ESMF_SUCCESS` if there are no errors.

21.7.11 ESMF_StateIsCreated - Check whether an State object has been created

INTERFACE:

```
function ESMF_StateIsCreated(state, rc)
```

RETURN VALUE:

```
logical :: ESMF_StateIsCreated
```

ARGUMENTS:

```
     type(ESMF_State), intent(in) :: state
 -- The following arguments require argument keyword syntax (e.g. rc=rc). --
     integer, intent(out), optional :: rc
```

DESCRIPTION:

Return `.true.` if the `state` has been created. Otherwise return `.false.`. If an error occurs, i.e. `rc /= ESMF_SUCCESS` is returned, the return value of the function will also be `.false.`.

The arguments are:

state `ESMF_State` queried.

[rc] Return code; equals `ESMF_SUCCESS` if there are no errors.

21.7.12 ESMF_StateLog - Log State information

INTERFACE:

```
subroutine ESMF_StateLog(state, prefix, logMsgFlag, nestedFlag, deepFlag, rc)
```

ARGUMENTS:

```
     type(ESMF_State), intent(in) :: state
 -- The following arguments require argument keyword syntax (e.g. rc=rc). --
     character(len=*), intent(in), optional :: prefix
     type(ESMF_LogMsg_Flag), intent(in), optional :: logMsgFlag
     logical, intent(in), optional :: nestedFlag
     logical, intent(in), optional :: deepFlag
     integer, intent(out), optional :: rc
```

DESCRIPTION:

Write information about `state` to the ESMF default Log.

The arguments are:

state `ESMF_State` object logged.

[prefix] String to prefix the log message. Default is no prefix.

[logMsgFlag] Type of log message generated. See section 50.2.3 for a list of valid message types. Default is `ESMF_LOGMSG_INFO`.

[nestedFlag] When set to `.false.` (default), only log information about the current State level. When set to `.true.`, additionally log information for each nested State.

[deepFlag] When set to `.false.` (default), only log top level information for each item contained in the State. When set to `.true.`, additionally log information for each item.

[rc] Return code; equals `ESMF_SUCCESS` if there are no errors.

21.7.13 ESMF_StatePrint - Print State information

INTERFACE:

```
subroutine ESMF_StatePrint(state, options, nestedFlag, rc)
```

ARGUMENTS:

```
type(ESMF_State), intent(in) :: state
character(len=*), intent(in), optional :: options
logical, intent(in), optional :: nestedFlag
integer, intent(out), optional :: rc
```

DESCRIPTION:

Prints information about the `state` to `stdout`.

The arguments are:

state The `ESMF_State` to print.

[options] Print options: " ", or "brief" - print names and types of the objects within the state (default), "long" - print additional information, such as proxy flags

[nestedFlag] When set to `.false.`, prints information about the current State level only (default), When set to `.true.`, additionally prints information from nested States

[rc] Return code; equals `ESMF_SUCCESS` if there are no errors.

21.7.14 ESMF_StateReconcile – Reconcile State across PETs

INTERFACE:

```
subroutine ESMF_StateReconcile(state, vm, checkflag, rc)
```

ARGUMENTS:

```
     type(ESMF_State),            intent(inout)         :: state
 -- The following arguments require argument keyword syntax (e.g. rc=rc). --
     type(ESMF_VM),               intent(in),  optional :: vm
     logical,                     intent(in),  optional :: checkflag
     integer,                     intent(out), optional :: rc
```

DESCRIPTION:

Must be called for any `ESMF_State` which contains ESMF objects that have not been created on all the PETs of `vm`. For example, if a coupler component is operating on objects which were created by another component that ran on only a subset of the coupler PETs, the coupler must make this call first before operating with any of the objects held by the `ESMF_State`. After calling `ESMF_StateReconcile()` all PETs will have a common view of all objects contained in this `ESMF_State`.

The Info metadata keys of reconciled objects are also reconciled. This means that after reconciliation, every object in `state` holds a consistent set of Info *keys* across all the PETs of `vm`. Notice however, that no guarantee is made with respect to the Info *value* that is associated with reconciled Info keys.

The Info metadata keys of the `state` object itself are also reconciled for most common cases. The only exception is for the case where Info keys were added to `state` under a component that is executing on a subset of PETs, and no actual object created under such component was added to `state`.

This call is collective across the specified VM.

The arguments are:

state `ESMF_State` to reconcile.

[vm] `ESMF_VM` across which to reconcile. The default is the current VM.

[checkflag] If set to `.TRUE.` the reconciled State object is checked for consistency across PETs before returning. Any detected issues are indicated in `rc`. Set `checkflag` to `.FALSE.` in order to achieve highest performance. The default is `.FALSE.`.

[rc] Return code; equals `ESMF_SUCCESS` if there are no errors.

21.7.15 ESMF_StateRemove - Remove an item from a State - (DEPRECATED METHOD)

INTERFACE:

```
   ! Private name; call using ESMF_StateRemove ()
   subroutine ESMF_StateRemoveOneItem (state, itemName, &
       relaxedFlag, rc)
```

ARGUMENTS:

```
     type(ESMF_State), intent(inout) :: state
     character(*), intent(in) :: itemName
 -- The following arguments require argument keyword syntax (e.g. rc=rc). --
     logical, intent(in), optional :: relaxedFlag
     integer, intent(out), optional :: rc
```

STATUS:

- This interface is backward compatible with ESMF versions starting at 5.2.0r. If code using this interface compiles with any version of ESMF starting with 5.2.0r, then it will compile with the current version.
- **DEPRECATED METHOD** as of ESMF 5.3.1. Please use `ESMF_StateRemove`, section `21.7.16` instead. Rationale: The list version is consistent with other ESMF container operations which use lists.

DESCRIPTION:

Remove an existing reference to an item from a `State`.

The arguments are:

state The `ESMF_State` within which `itemName` will be removed.

itemName The name of the item to be removed. This is a reference only. The item itself is unchanged.

If the `state` contains nested `ESMF_State`s, the `itemName` argument may specify a fully qualified name to remove the desired item with a single call. This is performed using the "/" character to separate the names of the intermediate State names leading to the desired item. (E.g., `itemName="state1/state12/item"`.

Since an item could potentially be referenced by multiple containers, it remains the responsibility of the user to manage its destruction when it is no longer in use.

[relaxedflag] A setting of `.true.` indicates a relaxed definition of "remove", where it is *not* an error if `itemName` is not present in the `state`. For `.false.` this is treated as an error condition. The default setting is `.false.`.

[rc] Return code; equals `ESMF_SUCCESS` if there are no errors.

21.7.16 ESMF_StateRemove - Remove a list of items from a State

INTERFACE:

```
! Private name; call using ESMF_StateRemove ()
subroutine ESMF_StateRemoveList (state, itemNameList, relaxedFlag, rc)
```

ARGUMENTS:

```
    type(ESMF_State), intent(inout) :: state
    character(*), intent(in) :: itemNameList(:)
-- The following arguments require argument keyword syntax (e.g. rc=rc). --
    logical, intent(in), optional :: relaxedFlag
    integer, intent(out), optional :: rc
```

STATUS:

- This interface is backward compatible with ESMF versions starting at 5.3.1. If code using this interface compiles with any version of ESMF starting with 5.3.1, then it will compile with the current version.

DESCRIPTION:

Remove existing references to items from a `State`.

The arguments are:

state The `ESMF_State` within which `itemName` will be removed.

itemNameList The name of the items to be removed. This is a reference only. The items themselves are unchanged.

If the `state` contains nested `ESMF_State`s, the `itemName` arguments may specify fully qualified names to remove the desired items with a single call. This is performed using the "/" character to separate the names of the intermediate State names leading to the desired items. (E.g., `itemName="state1/state12/item"`.

Since items could potentially be referenced by multiple containers, it remains the responsibility of the user to manage their destruction when they are no longer in use.

[relaxedflag] A setting of `.true.` indicates a relaxed definition of "remove", where it is *not* an error if an item in the `itemNameList` is not present in the `state`. For `.false.` this is treated as an error condition. The default setting is `.false.`.

[rc] Return code; equals `ESMF_SUCCESS` if there are no errors.

21.7.17 ESMF_StateReplace - Replace a list of items within a State

INTERFACE:

```
subroutine ESMF_StateReplace(state, <itemList>, relaxedflag, rc)
```

ARGUMENTS:

```
  type(ESMF_State), intent(inout) :: state
  <itemList>, see below for supported values
-- The following arguments require argument keyword syntax (e.g. rc=rc). --
  logical, intent(in), optional :: relaxedflag
  integer, intent(out), optional :: rc
```

STATUS:

- This interface is backward compatible with ESMF versions starting at 5.2.0r. If code using this interface compiles with any version of ESMF starting with 5.2.0r, then it will compile with the current version.

DESCRIPTION:

Replace a list of items with a `ESMF_State`. If an item in <itemList> does not match any items already present in `state`, an error is returned.

Supported values for <itemList> are:

type(ESMF_Array), intent(in) :: arrayList(:)

type(ESMF_ArrayBundle), intent(in) :: arraybundleList(:)

type(ESMF_Field), intent(in) :: fieldList(:)

type(ESMF_FieldBundle), intent(in) :: fieldbundleList(:)

type(ESMF_RouteHandle), intent(in) :: routehandleList(:)

type(ESMF_State), intent(in) :: nestedStateList(:)

The arguments are:

state An `ESMF_State` within which the <itemList> items will be replaced.

<itemList> The list of items to be replaced. This is a reference only; when the `ESMF_State` is destroyed the <itemList> contained in it will not be destroyed. Also, the items in the <itemList> cannot be safely destroyed before the `ESMF_State` is destroyed. Since <itemList> items can be added to multiple containers, it remains the responsibility of the user to manage their destruction when they are no longer in use.

[relaxedflag] A setting of `.true.` indicates a relaxed definition of "replace", where it is *not* an error if `<itemList>` contains items with names that are not found in `state`. The `State` is left unchanged for these items. For `.false.` this is treated as an error condition. The default setting is `.false.`.

[rc] Return code; equals `ESMF_SUCCESS` if there are no errors.

21.7.18 ESMF_StateSet - Set State aspects

INTERFACE:

```
subroutine ESMF_StateSet(state, stateIntent, name, rc)
```

ARGUMENTS:

```
     type(ESMF_State),            intent(inout)         :: state
 -- The following arguments require argument keyword syntax (e.g. rc=rc). --
     type(ESMF_StateIntent_Flag), intent(in),  optional :: stateIntent
     character(len = *),          intent(in),  optional :: name
     integer,                     intent(out), optional :: rc
```

DESCRIPTION:

Set the info in the `state` object.

he arguments are:

state The `ESMF_State` to set.

[stateIntent] The intent, e.g. Import, Export, or Internal, of this `ESMF_State`. Possible values are listed in Section 21.2.1.

[name] The State name.

[rc] Return code; equals `ESMF_SUCCESS` if there are no errors.

21.7.19 ESMF_StateValidate - Check validity of a State

INTERFACE:

```
subroutine ESMF_StateValidate(state, nestedFlag, rc)
```

ARGUMENTS:

```
      type(ESMF_State), intent(in) :: state
 -- The following arguments require argument keyword syntax (e.g. rc=rc). --
      logical,          intent(in),  optional :: nestedFlag
      integer,          intent(out), optional :: rc
```

STATUS:

- This interface is backward compatible with ESMF versions starting at 5.2.0r. If code using this interface compiles with any version of ESMF starting with 5.2.0r, then it will compile with the current version.

DESCRIPTION:

Validates that the `state` is internally consistent. Currently this method determines if the `State` is uninitialized or already destroyed. The method returns an error code if problems are found.

The arguments are:

state The `ESMF_State` to validate.

[nestedFlag] `.false.` - validates at the current State level only (default) `.true.` - recursively validates any nested States

[rc] Return code; equals `ESMF_SUCCESS` if there are no errors.

22 Internal State

22.1 Description

ESMF provides the concept of an Internal State that is associated with a Component. Through the InternalState API a user can attach a private data block to a Component, and later retrieve a pointer to this memory allocation.

22.2 Use and Examples

The following examples demonstrate common use cases of the InternalState API.

22.2.1 Add and Get the Internal State

Adding and getting of InternalState information are supported from anywhere in the Component's SetServices, Initialize, Run, or Finalize code.

The code below demonstrates the basic InternalState API. Notice that an extra level of indirection to the user data is necessary!

```
  ! ESMF Framework module
  use ESMF
  use ESMF_TestMod
  implicit none

  type(ESMF_GridComp) :: comp
  integer :: rc, finalrc, i

  ! Internal State Variables
  type testData
  sequence
    integer :: testValue
    real    :: testScaling
  end type

  type dataWrapper
  sequence
    type(testData), pointer :: p
  end type

  type(dataWrapper)             :: wrap
  character(len=:), allocatable :: labelList(:)

!-------------------------------------------------------------------------

  call ESMF_Initialize(defaultlogfilename="InternalStateEx.Log", &
                   logkindflag=ESMF_LOGKIND_MULTI, rc=rc)
  if (rc /= ESMF_SUCCESS) call ESMF_Finalize(endflag=ESMF_END_ABORT)

!-------------------------------------------------------------------------

  !  Creation of a Component
  comp = ESMF_GridCompCreate(name="test", rc=rc)
  if (rc .ne. ESMF_SUCCESS) finalrc = ESMF_FAILURE
```

This could be called, for example, during a Component's initialize phase.

```
  ! Allocate private data
  allocate(wrap%p)

  ! Initialize private data block
  wrap%p%testValue = 4567
  wrap%p%testScaling = 0.5

  ! Add Internal State to Component
  call ESMF_InternalStateAdd(comp, internalState=wrap, rc=rc)
  if (rc .ne. ESMF_SUCCESS) finalrc = ESMF_FAILURE

  ! "Forget" the local reference to the private data block, do demonstrate that
```

```
! it can be correctly retrieved below.
wrap%p => null()
```

This could be called, for example, during a Component's run phase.

```
! Get Internal State
call ESMF_InternalStateGet(comp, internalState=wrap, rc=rc)
if (rc .ne. ESMF_SUCCESS) finalrc = ESMF_FAILURE

! Access private data block and verify data
if ((wrap%p%testValue .ne. 4567) .or. &
  (wrap%p%testScaling - 0.5 > tiny(wrap%p%testScaling))) then
  print *, "private data validation NOT successful"
  finalrc = ESMF_FAILURE
else
  print *, "private data validation successful"
endif

! Deallocate the private data block
deallocate(wrap%p)
```

22.2.2 Add and Get Internal State with label

InternalState information added to a component can be associated with a string label. Multiple such named internal states can be added to the same component object.

```
! Allocate another private data block
allocate(wrap%p)

! Initialize private data block
wrap%p%testValue = 1234
wrap%p%testScaling = 0.8

! Add Internal State to the Component with label
call ESMF_InternalStateAdd(comp, internalState=wrap, &
  label="first named data block", rc=rc)
if (rc .ne. ESMF_SUCCESS) finalrc = ESMF_FAILURE

! And allocate another private data block
allocate(wrap%p)

! Initialize private data block
wrap%p%testValue = 4321
wrap%p%testScaling = 0.1

! Add Internal State to the Component with label
call ESMF_InternalStateAdd(comp, internalState=wrap, &
  label="second named data block", rc=rc)
if (rc .ne. ESMF_SUCCESS) finalrc = ESMF_FAILURE
```

```
! A list of InternalState labels can be queried from the component object.
call ESMF_InternalStateGet(comp, labelList=labelList, rc=rc)
if (rc .ne. ESMF_SUCCESS) finalrc = ESMF_FAILURE

! write the labelList to log
do i=1, size(labelList)
  call ESMF_LogWrite("InternalState label: "//labelList(i), &
    ESMF_LOGMSG_INFO, rc=rc)
  if (rc /= ESMF_SUCCESS) call ESMF_Finalize(endflag=ESMF_END_ABORT)
enddo
```

The last internal state added under a specific label can be retrieved using the `ESMF_InternalStateGet()` method with the `lable` argument.

```
! Get Internal State
call ESMF_InternalStateGet(comp, internalState=wrap, &
  label="first named data block", rc=rc)
if (rc .ne. ESMF_SUCCESS) finalrc = ESMF_FAILURE

! Deallocate the private data block
deallocate(wrap%p)

! Get Internal State
call ESMF_InternalStateGet(comp, internalState=wrap, &
  label="second named data block", rc=rc)
if (rc .ne. ESMF_SUCCESS) finalrc = ESMF_FAILURE

! Deallocate the private data block
deallocate(wrap%p)
```

22.3 Restrictions and Future Work

There is currently no `ESMF_InternalStateAddReplace()` method implemented. However, the available `ESMF_InternalStateAdd()` method practically acts how `ESMF_InternalStateAddReplace()` should act: `ESMF_SUCCESS` is returned when calling repeatedly with the same `label`, or empty `label`), and the last InternalState added will be returned when queried by `ESMF_InternalStateGet()`.

Furthermore, no `ESMF_InternalStateRemove()` method is available. InternalState references set once with `ESMF_InternalStateAdd()` are kept until the host component object is destroyed. However, references overridden by successive calls of `ESMF_InternalStateAdd()` are no longer accessible by the user via `ESMF_InternalStateGet()`.

It is the user's responsibility to ensure data blocks accessed via the InternalState API are correctly allocated and valid.

Future work will align the `ESMF_InternalState` API with the `ESMF_AttachableMethods` API.

22.4 Class API

22.4.1 ESMF_InternalStateAdd - Add an InternalState to CplComp

INTERFACE:

```
! Private name; call using ESMF_InternalStateAdd()
subroutine ESMF_InternalStateCplCompAdd(cplcomp, &
  internalState, label, rc)
```

ARGUMENTS:

```
  type(ESMF_CplComp),  intent(in)            :: cplcomp
  type(*)                                    :: internalState
-- The following arguments require argument keyword syntax (e.g. rc=rc). --
  character(*),        intent(in),  optional :: label
  integer,             intent(out), optional :: rc
```

DESCRIPTION:

Add an internal state.

CAUTION: This interface is only implemented for compilers that support Fortran 2018 assumed-type dummy arguments. Do not use this method in code that requires portability with compilers that do not support this feature!

The arguments are:

cplcomp The `ESMF_CplComp` object to hold the internal state.

internalState The internal state to add.

[label] The label to associate with the internal state. By default, associated without label.

[rc] Return code; equals `ESMF_SUCCESS` if there are no errors.

22.4.2 ESMF_InternalStateAdd - Add an InternalState to GridComp

INTERFACE:

```
! Private name; call using ESMF_InternalStateAdd()
subroutine ESMF_InternalStateGridCompAdd(gcomp, &
  internalState, label, rc)
```

ARGUMENTS:

```
  type(ESMF_GridComp), intent(in)            :: gcomp
  type(*)                                    :: internalState
-- The following arguments require argument keyword syntax (e.g. rc=rc). --
  character(*),        intent(in),  optional :: label
  integer,             intent(out), optional :: rc
```

DESCRIPTION:

Add an internal state.

CAUTION: This interface is only implemented for compilers that support Fortran 2018 assumed-type dummy arguments. Do not use this method in code that requires portability with compilers that do not support this feature!

The arguments are:

gcomp The `ESMF_GridComp` object to hold the internal state.

internalState The internal state to add.

[label] The label to associate with the internal state. By default, associated without label.

[rc] Return code; equals `ESMF_SUCCESS` if there are no errors.

22.4.3 ESMF_InternalStateGet - Get InternalState from CplComp

INTERFACE:

```
! Private name; call using ESMF_InternalStateGet()
subroutine ESMF_InternalStateCplCompGet(cplcomp, &
  internalState, label, rc)
```

ARGUMENTS:

```
  type(ESMF_CplComp),  intent(in)            :: cplcomp
  type(*)                                    :: internalState
-- The following arguments require argument keyword syntax (e.g. rc=rc). --
  character(*),        intent(in),  optional :: label
  integer,             intent(out), optional :: rc
```

DESCRIPTION:

Access the internal state.

CAUTION: This interface is only implemented for compilers that support Fortran 2018 assumed-type dummy arguments. Do not use this method in code that requires portability with compilers that do not support this feature!

The arguments are:

cplcomp The `ESMF_CplComp` object holding the internal state.

internalState The returned internal state.

[label] The label of the internal state accessed. By default, access the last internal state set without label.

[rc] Return code; equals `ESMF_SUCCESS` if there are no errors.

22.4.4 ESMF_InternalStateGet - Get InternalState labels from CplComp

INTERFACE:

```
! Private name; call using ESMF_InternalStateGet()
subroutine ESMF_InternalStateCplCompGetL(cplcomp, labelList, rc)
```

ARGUMENTS:

```
  type(ESMF_CplComp),            intent(in)            :: cplcomp
  character(len=:), allocatable, intent(out)           :: labelList(:)
  integer,                       intent(out), optional :: rc
```

DESCRIPTION:

Access labels of all the internal states.

The arguments are:

cplcomp The `ESMF_CplComp` object holding the internal states.

labelList List of labels of *all* the internal states. On return, it will be allocated with as many list elements as there are internal states. The length of each label in `labelList` is that of the longest label currently set. Elements with shorter labels are padded with white spaces.

[rc] Return code; equals `ESMF_SUCCESS` if there are no errors.

22.4.5 ESMF_InternalStateGet - Get InternalState from GridComp

INTERFACE:

```
! Private name; call using ESMF_InternalStateGet()
subroutine ESMF_InternalStateGridCompGet(gcomp, &
  internalState, label, rc)
```

ARGUMENTS:

```
  type(ESMF_GridComp), intent(in)            :: gcomp
  type(*)                                    :: internalState
-- The following arguments require argument keyword syntax (e.g. rc=rc). --
  character(*),        intent(in),  optional :: label
  integer,             intent(out), optional :: rc
```

DESCRIPTION:

Access the internal state.

CAUTION: This interface is only implemented for compilers that support Fortran 2018 assumed-type dummy arguments. Do not use this method in code that requires portability with compilers that do not support this feature!

The arguments are:

cplcomp The `ESMF_CplComp` object holding the internal state.

internalState The returned internal state.

[label] The label of the internal state accessed. By default, access the last internal state set without label.

[rc] Return code; equals `ESMF_SUCCESS` if there are no errors.

22.4.6 ESMF_InternalStateGet - Get InternalState labels from GridComp

INTERFACE:

```
! Private name; call using ESMF_InternalStateGet()
subroutine ESMF_InternalStateGridCompGetL(gcomp, labelList, rc)
```

ARGUMENTS:

```
type(ESMF_GridComp),           intent(in)            :: gcomp
character(len=:), allocatable, intent(out)           :: labelList(:)
integer,                       intent(out), optional :: rc
```

DESCRIPTION:

Access labels of all the internal states.

The arguments are:

gcomp The `ESMF_GridComp` object holding the internal states.

labelList List of labels of *all* the internal states. On return, it will be allocated with as many list elements as there are internal states. The length of each label in `labelList` is that of the longest label currently set. Elements with shorter labels are padded with white spaces.

[rc] Return code; equals `ESMF_SUCCESS` if there are no errors.

23 Attachable Methods

23.1 Description

ESMF allows user methods to be attached to Components and States. Providing this capability supports a more object oriented way of model design.

Attachable methods on Components can be used to implement the concept of generic Components where the specialization requires attaching methods with well defined names. This methods are then called by the generic Component code.

Attaching methods to States can be used to supply data operations along with the data objects inside of a State object. This can be useful where a producer Component not only supplies a data set, but also the associated processing functionality. This can be more efficient than providing all of the possible sets of derived data.

23.2 Use and Examples

The following examples demonstrate how a producer Component attaches a user defined method to a State, and how it implements the method. The attached method is then executed by the consumer Component.

23.2.1 Producer Component attaches user defined method

The producer Component attaches a user defined method to `exportState` during the Component's initialize method. The user defined method is attached with label `finalCalculation` by which it will become accessible to the consumer Component.

```
subroutine init(gcomp, importState, exportState, clock, rc)
  ! arguments
  type(ESMF_GridComp):: gcomp
  type(ESMF_State):: importState, exportState
  type(ESMF_Clock):: clock
  integer, intent(out):: rc

  rc = ESMF_SUCCESS
  call ESMF_MethodAdd(exportState, label="finalCalculation", &
    userRoutine=finalCalc, rc=rc)
  if (rc /= ESMF_SUCCESS) return

  ! just for testing purposes add the same method with a crazy string label
  call ESMF_MethodAdd(exportState, label="Somewhat of a SILLY @$^@_ label", &
    userRoutine=finalCalc, rc=rc)
  if (rc /= ESMF_SUCCESS) return

end subroutine !-----------------------------------------------------------------
```

23.2.2 Producer Component implements user defined method

The producer Component implements the attached, user defined method `finalCalc`. Strict interface rules apply for the user defined method.

```
subroutine finalCalc(state, rc)
  ! arguments
  type(ESMF_State):: state
  integer, intent(out):: rc

  rc = ESMF_SUCCESS

  ! access data objects in state and perform calculation
  print *, "dummy output from attached method "

end subroutine !-----------------------------------------------------------------
```

23.2.3 Consumer Component executes user defined method

The consumer Component executes the user defined method on the `importState`.

```
subroutine init(gcomp, importState, exportState, clock, rc)
  ! arguments
  type(ESMF_GridComp):: gcomp
  type(ESMF_State):: importState, exportState
  type(ESMF_Clock):: clock
  integer, intent(out):: rc

  integer:: userRc, i
  logical:: isPresent
  character(len=:), allocatable :: labelList(:)

  rc = ESMF_SUCCESS
```

The importState can be queried for a list of *all* the attached methods.

```
  call ESMF_MethodGet(importState, labelList=labelList, rc=rc)
  if (rc /= ESMF_SUCCESS) return

  ! print the labels
  do i=1, size(labelList)
    print *, labelList(i)
  enddo
```

It is also possible to check the importState whether a *specific* method is attached. This allows the consumer code to implement alternatives in case the method is not available.

```
  call ESMF_MethodGet(importState, label="finalCalculation", &
    isPresent=isPresent, rc=rc)
  if (rc /= ESMF_SUCCESS) return
```

Finally call into the attached method from the consumer side.

```
  call ESMF_MethodExecute(importState, label="finalCalculation", &
    userRc=userRc, rc=rc)
  if (rc /= ESMF_SUCCESS) return
  rc = userRc
  if (rc /= ESMF_SUCCESS) return

end subroutine !-----------------------------------------------------------------
```

23.3 Restrictions and Future Work

1. **Not reconciled.** Attachable Methods are PET-local settings on an object. Currently Attachable Methods cannot be reconciled (i.e. ignored during `ESMF_StateReconcile()`).
2. **No copy nor move.** Currently Attachable Methods cannot be copied or moved between objects.

23.4 Class API

23.4.1 ESMF_MethodAdd - Attach user method to CplComp

INTERFACE:

```
! Private name; call using ESMF_MethodAdd()
subroutine ESMF_MethodCplCompAdd(cplcomp, label, index, userRoutine, rc)
```

ARGUMENTS:

```
type(ESMF_CplComp)                      :: cplcomp
character(len=*), intent(in)            :: label
integer,          intent(in),  optional :: index
interface
  subroutine userRoutine(cplcomp, rc)
    use ESMF_CompMod
    implicit none
    type(ESMF_CplComp)          :: cplcomp      ! must not be optional
    integer, intent(out)        :: rc           ! must not be optional
  end subroutine
end interface
integer,          intent(out), optional :: rc
```

DESCRIPTION:

Attach `userRoutine`. Error out if there is a previous attached method under the same `label` and `index`.

The arguments are:

cplcomp The `ESMF_CplComp` to attach to.

label Label of method.

[index] Integer modifier to distinguish multiple entries with the same `label`.

userRoutine The user-supplied subroutine to be associated with the `label`.

The subroutine must have the exact interface shown above for the `userRoutine` argument. Arguments in `userRoutine` must not be declared as optional, and the types, intent and order must match. Prior to Fortran-2008, the subroutine must be either a module scope procedure, or an external procedure that has a matching interface block specified for it. An internal procedure which is contained within another procedure must not be used. From Fortran-2008 onwards, an internal procedure contained within either a main program or a module procedure may be used. If the internal procedure is contained within a module procedure, it is subject to initialization requirements. See: 16.4.9

[rc] Return code; equals `ESMF_SUCCESS` if there are no errors.

23.4.2 ESMF_MethodAdd - Attach user method, located in shared object, to CplComp

INTERFACE:

```
! Private name; call using ESMF_MethodAdd()
subroutine ESMF_MethodCplCompAddShObj(cplcomp, label, index, userRoutine, &
  sharedObj, rc)
```

ARGUMENTS:

```
type(ESMF_CplComp)                      :: cplcomp
character(len=*), intent(in)            :: label
integer,          intent(in),  optional :: index
character(len=*), intent(in)            :: userRoutine
character(len=*), intent(in),  optional :: sharedObj
integer,          intent(out), optional :: rc
```

DESCRIPTION:

Attach `userRoutine`. Error out if there is a previous attached method under the same `label` and `index`.

The arguments are:

cplcomp The `ESMF_CplComp` to attach to.

label Label of method.

[index] Integer modifier to distinguish multiple entries with the same `label`.

userRoutine Name of user-supplied subroutine to be associated with the `label`, specified as a character string.

The subroutine must have the exact interface shown in `ESMF_MethodCplCompAdd` for the `userRoutine` argument. Arguments in `userRoutine` must not be declared as optional, and the types, intent and order must match. Prior to Fortran-2008, the subroutine must be either a module scope procedure, or an external procedure that has a matching interface block specified for it. An internal procedure which is contained within another procedure must not be used. From Fortran-2008 onwards, an internal procedure contained within either a main program or a module procedure may be used. If the internal procedure is contained within a module procedure, it is subject to initialization requirements. See: 16.4.9

[sharedObj] Name of shared object that contains `userRoutine`. If the `sharedObj` argument is not provided the executable itself will be searched for `userRoutine`.

[rc] Return code; equals `ESMF_SUCCESS` if there are no errors.

23.4.3 ESMF_MethodAdd - Attach user method to GridComp

INTERFACE:

```
! Private name; call using ESMF_MethodAdd()
subroutine ESMF_MethodGridCompAdd(gcomp, label, index, userRoutine, rc)
```

ARGUMENTS:

```
type(ESMF_GridComp)                     :: gcomp
character(len=*), intent(in)            :: label
integer,          intent(in),  optional :: index
interface
  subroutine userRoutine(gcomp, rc)
    use ESMF_CompMod
    implicit none
    type(ESMF_GridComp)         :: gcomp        ! must not be optional
```

```
      integer, intent(out)        :: rc           ! must not be optional
    end subroutine
  end interface
  integer,          intent(out), optional :: rc
```

DESCRIPTION:

Attach `userRoutine`. Error out if there is a previous attached method under the same `label` and `index`.

The arguments are:

gcomp The `ESMF_GridComp` to attach to.

label Label of method.

[index] Integer modifier to distinguish multiple entries with the same `label`.

userRoutine The user-supplied subroutine to be associated with the `label`.

The subroutine must have the exact interface shown above for the `userRoutine` argument. Arguments in `userRoutine` must not be declared as optional, and the types, intent and order must match. Prior to Fortran-2008, the subroutine must be either a module scope procedure, or an external procedure that has a matching interface block specified for it. An internal procedure which is contained within another procedure must not be used. From Fortran-2008 onwards, an internal procedure contained within either a main program or a module procedure may be used. If the internal procedure is contained within a module procedure, it is subject to initialization requirements. See: 16.4.9

[rc] Return code; equals `ESMF_SUCCESS` if there are no errors.

23.4.4 ESMF_MethodAdd - Attach user method, located in shared object, to GridComp

INTERFACE:

```
! Private name; call using ESMF_MethodAdd()
subroutine ESMF_MethodGridCompAddShObj(gcomp, label, index, userRoutine, &
  sharedObj, rc)
```

ARGUMENTS:

```
  type(ESMF_GridComp)                     :: gcomp
  character(len=*), intent(in)            :: label
  integer,          intent(in),  optional :: index
  character(len=*), intent(in)            :: userRoutine
  character(len=*), intent(in),  optional :: sharedObj
  integer,          intent(out), optional :: rc
```

DESCRIPTION:

Attach `userRoutine`. Error out if there is a previous attached method under the same `label` and `index`.

The arguments are:

gcomp The `ESMF_GridComp` to attach to.

label Label of method.

[index] Integer modifier to distinguish multiple entries with the same `label`.

userRoutine Name of user-supplied subroutine to be associated with the `label`, specified as a character string.

The subroutine must have the exact interface shown in `ESMF_MethodGridCompAdd` for the `userRoutine` argument. Arguments in `userRoutine` must not be declared as optional, and the types, intent and order must match. Prior to Fortran-2008, the subroutine must be either a module scope procedure, or an external procedure that has a matching interface block specified for it. An internal procedure which is contained within another procedure must not be used. From Fortran-2008 onwards, an internal procedure contained within either a main program or a module procedure may be used. If the internal procedure is contained within a module procedure, it is subject to initialization requirements. See: 16.4.9

[sharedObj] Name of shared object that contains `userRoutine`. If the `sharedObj` argument is not provided the executable itself will be searched for `userRoutine`.

[rc] Return code; equals `ESMF_SUCCESS` if there are no errors.

23.4.5 ESMF_MethodAdd - Attach user method to State

INTERFACE:

```
! Private name; call using ESMF_MethodAdd()
subroutine ESMF_MethodStateAdd(state, label, index, userRoutine, rc)
```

ARGUMENTS:

```
type(ESMF_State)                        :: state
character(len=*), intent(in)            :: label
integer,          intent(in),  optional :: index
interface
  subroutine userRoutine(state, rc)
    use ESMF_StateMod
    implicit none
    type(ESMF_State)            :: state        ! must not be optional
    integer, intent(out)        :: rc           ! must not be optional
  end subroutine
end interface
integer,          intent(out), optional :: rc
```

DESCRIPTION:

Attach `userRoutine`. Error out if there is a previous attached method under the same `label` and `index`.

The arguments are:

state The `ESMF_State` to attach to.

label Label of method.

[index] Integer modifier to distinguish multiple entries with the same `label`.

userRoutine The user-supplied subroutine to be associated with the `label`.

The subroutine must have the exact interface shown above for the `userRoutine` argument. Arguments in `userRoutine` must not be declared as optional, and the types, intent and order must match. Prior to Fortran-2008, the subroutine must be either a module scope procedure, or an external procedure that has a matching interface block specified for it. An internal procedure which is contained within another procedure must not be used. From Fortran-2008 onwards, an internal procedure contained within either a main program or a module procedure may be used. If the internal procedure is contained within a module procedure, it is subject to initialization requirements. See: 16.4.9

[rc] Return code; equals `ESMF_SUCCESS` if there are no errors.

23.4.6 ESMF_MethodAdd - Attach user method, located in shared object, to State

INTERFACE:

```
! Private name; call using ESMF_MethodAdd()
subroutine ESMF_MethodStateAddShObj(state, label, index, userRoutine, &
  sharedObj, rc)
```

ARGUMENTS:

```
type(ESMF_State)                        :: state
character(len=*), intent(in)            :: label
integer,          intent(in),  optional :: index
character(len=*), intent(in)            :: userRoutine
character(len=*), intent(in),  optional :: sharedObj
integer,          intent(out), optional :: rc
```

DESCRIPTION:

Attach `userRoutine`. Error out if there is a previous attached method under the same `label` and `index`.

The arguments are:

state The `ESMF_State` to attach to.

label Label of method.

[index] Integer modifier to distinguish multiple entries with the same `label`.

userRoutine Name of user-supplied subroutine to be associated with the `label`, specified as a character string.

The subroutine must have the exact interface shown in `ESMF_MethodStateAdd` for the `userRoutine` argument. Arguments in `userRoutine` must not be declared as optional, and the types, intent and order must match. Prior to Fortran-2008, the subroutine must be either a module scope procedure, or an external procedure that has a matching interface block specified for it. An internal procedure which is contained within another procedure must not be used. From Fortran-2008 onwards, an internal procedure contained within either a main program or a module procedure may be used. If the internal procedure is contained within a module procedure, it is subject to initialization requirements. See: 16.4.9

[sharedObj] Name of shared object that contains `userRoutine`. If the `sharedObj` argument is not provided the executable itself will be searched for `userRoutine`.

[rc] Return code; equals `ESMF_SUCCESS` if there are no errors.

23.4.7 ESMF_MethodAddReplace - Attach user method to CplComp

INTERFACE:

```
! Private name; call using ESMF_MethodAddReplace()
subroutine ESMF_MethodCplCompAddRep(cplcomp, label, index, userRoutine, rc)
```

ARGUMENTS:

```
type(ESMF_CplComp)                      :: cplcomp
character(len=*), intent(in)            :: label
integer,          intent(in),  optional :: index
interface
  subroutine userRoutine(cplcomp, rc)
    use ESMF_CompMod
    implicit none
    type(ESMF_CplComp)          :: cplcomp      ! must not be optional
    integer, intent(out)        :: rc           ! must not be optional
  end subroutine
end interface
integer,          intent(out), optional :: rc
```

DESCRIPTION:

Attach `userRoutine`. Replacing potential previous attached method under the same `label` and `index`.

The arguments are:

cplcomp The `ESMF_CplComp` to attach to.

label Label of method.

[index] Integer modifier to distinguish multiple entries with the same `label`.

userRoutine The user-supplied subroutine to be associated with the `label`.

The subroutine must have the exact interface shown above for the `userRoutine` argument. Arguments in `userRoutine` must not be declared as optional, and the types, intent and order must match. Prior to Fortran-2008, the subroutine must be either a module scope procedure, or an external procedure that has a matching interface block specified for it. An internal procedure which is contained within another procedure must not be used. From Fortran-2008 onwards, an internal procedure contained within either a main program or a module procedure may be used. If the internal procedure is contained within a module procedure, it is subject to initialization requirements. See: 16.4.9

[rc] Return code; equals `ESMF_SUCCESS` if there are no errors.

23.4.8 ESMF_MethodAddReplace - Attach user method, located in shared object, to CplComp

INTERFACE:

```
! Private name; call using ESMF_MethodAddReplace()
subroutine ESMF_MethodCplCompAddRepShObj(cplcomp, label, index, userRoutine, &
  sharedObj, rc)
```

ARGUMENTS:

```
type(ESMF_CplComp)                      :: cplcomp
character(len=*), intent(in)            :: label
integer,          intent(in),  optional :: index
character(len=*), intent(in)            :: userRoutine
character(len=*), intent(in),  optional :: sharedObj
integer,          intent(out), optional :: rc
```

DESCRIPTION:

Attach `userRoutine`. Replacing potential previous attached method under the same `label` and `index`.

The arguments are:

cplcomp The `ESMF_CplComp` to attach to.

label Label of method.

[index] Integer modifier to distinguish multiple entries with the same `label`.

userRoutine Name of user-supplied subroutine to be associated with the `label`, specified as a character string.

The subroutine must have the exact interface shown in `ESMF_MethodCplCompAdd` for the `userRoutine` argument. Arguments in `userRoutine` must not be declared as optional, and the types, intent and order must match. Prior to Fortran-2008, the subroutine must be either a module scope procedure, or an external procedure that has a matching interface block specified for it. An internal procedure which is contained within another procedure must not be used. From Fortran-2008 onwards, an internal procedure contained within either a main program or a module procedure may be used. If the internal procedure is contained within a module procedure, it is subject to initialization requirements. See: 16.4.9

[sharedObj] Name of shared object that contains `userRoutine`. If the `sharedObj` argument is not provided the executable itself will be searched for `userRoutine`.

[rc] Return code; equals `ESMF_SUCCESS` if there are no errors.

23.4.9 ESMF_MethodAddReplace - Attach user method to GridComp

INTERFACE:

```
! Private name; call using ESMF_MethodAddReplace()
subroutine ESMF_MethodGridCompAddRep(gcomp, label, index, userRoutine, rc)
```

ARGUMENTS:

```
type(ESMF_GridComp)                      :: gcomp
character(len=*), intent(in)             :: label
integer,          intent(in),  optional :: index
interface
  subroutine userRoutine(gcomp, rc)
    use ESMF_CompMod
    implicit none
    type(ESMF_GridComp)         :: gcomp        ! must not be optional
    integer, intent(out)        :: rc           ! must not be optional
  end subroutine
end interface
integer,          intent(out), optional :: rc
```

DESCRIPTION:

Attach `userRoutine`. Replacing potential previous attached method under the same `label` and `index`.

The arguments are:

gcomp The `ESMF_GridComp` to attach to.

label Label of method.

[index] Integer modifier to distinguish multiple entries with the same `label`.

userRoutine The user-supplied subroutine to be associated with the `label`.

The subroutine must have the exact interface shown above for the `userRoutine` argument. Arguments in `userRoutine` must not be declared as optional, and the types, intent and order must match. Prior to Fortran-2008, the subroutine must be either a module scope procedure, or an external procedure that has a matching interface block specified for it. An internal procedure which is contained within another procedure must not be used. From Fortran-2008 onwards, an internal procedure contained within either a main program or a module procedure may be used. If the internal procedure is contained within a module procedure, it is subject to initialization requirements. See: 16.4.9

[rc] Return code; equals `ESMF_SUCCESS` if there are no errors.

23.4.10 ESMF_MethodAddReplace - Attach user method, located in shared object, to GridComp

INTERFACE:

```
! Private name; call using ESMF_MethodAddReplace()
subroutine ESMF_MethodGridCompAddRepShObj(gcomp, label, index, userRoutine, &
  sharedObj, rc)
```

ARGUMENTS:

```
type(ESMF_GridComp)                      :: gcomp
character(len=*), intent(in)             :: label
```

```
integer,          intent(in),  optional :: index
character(len=*), intent(in)            :: userRoutine
character(len=*), intent(in),  optional :: sharedObj
integer,          intent(out), optional :: rc
```

DESCRIPTION:

Attach `userRoutine`. Replacing potential previous attached method under the same `label` and `index`.

The arguments are:

gcomp The `ESMF_GridComp` to attach to.

label Label of method.

[index] Integer modifier to distinguish multiple entries with the same `label`.

userRoutine Name of user-supplied subroutine to be associated with the `label`, specified as a character string.

The subroutine must have the exact interface shown in `ESMF_MethodGridCompAdd` for the `userRoutine` argument. Arguments in `userRoutine` must not be declared as optional, and the types, intent and order must match. Prior to Fortran-2008, the subroutine must be either a module scope procedure, or an external procedure that has a matching interface block specified for it. An internal procedure which is contained within another procedure must not be used. From Fortran-2008 onwards, an internal procedure contained within either a main program or a module procedure may be used. If the internal procedure is contained within a module procedure, it is subject to initialization requirements. See: 16.4.9

[sharedObj] Name of shared object that contains `userRoutine`. If the `sharedObj` argument is not provided the executable itself will be searched for `userRoutine`.

[rc] Return code; equals `ESMF_SUCCESS` if there are no errors.

23.4.11 ESMF_MethodAddReplace - Attach user method to State

INTERFACE:

```
! Private name; call using ESMF_MethodAddReplace()
subroutine ESMF_MethodStateAddRep(state, label, index, userRoutine, rc)
```

ARGUMENTS:

```
type(ESMF_State)                        :: state
character(len=*), intent(in)            :: label
integer,          intent(in),  optional :: index
interface
  subroutine userRoutine(state, rc)
    use ESMF_StateMod
    implicit none
    type(ESMF_State)            :: state        ! must not be optional
    integer, intent(out)        :: rc           ! must not be optional
  end subroutine
end interface
integer,          intent(out), optional :: rc
```

DESCRIPTION:

Attach `userRoutine`. Replacing potential previous attached method under the same `label` and `index`.

The arguments are:

state The `ESMF_State` to attach to.

label Label of method.

[index] Integer modifier to distinguish multiple entries with the same `label`.

userRoutine The user-supplied subroutine to be associated with the `label`.

The subroutine must have the exact interface shown above for the `userRoutine` argument. Arguments in `userRoutine` must not be declared as optional, and the types, intent and order must match. Prior to Fortran-2008, the subroutine must be either a module scope procedure, or an external procedure that has a matching interface block specified for it. An internal procedure which is contained within another procedure must not be used. From Fortran-2008 onwards, an internal procedure contained within either a main program or a module procedure may be used. If the internal procedure is contained within a module procedure, it is subject to initialization requirements. See: 16.4.9

[rc] Return code; equals `ESMF_SUCCESS` if there are no errors.

23.4.12 ESMF_MethodAddReplace - Attach user method, located in shared object, to State

INTERFACE:

```
! Private name; call using ESMF_MethodAddReplace()
subroutine ESMF_MethodStateAddRepShObj(state, label, index, userRoutine, &
  sharedObj, rc)
```

ARGUMENTS:

```
type(ESMF_State)                        :: state
character(len=*), intent(in)            :: label
integer,          intent(in),  optional :: index
character(len=*), intent(in)            :: userRoutine
character(len=*), intent(in),  optional :: sharedObj
integer,          intent(out), optional :: rc
```

DESCRIPTION:

Attach `userRoutine`. Replacing potential previous attached method under the same `label` and `index`.

The arguments are:

state The `ESMF_State` to attach to.

label Label of method.

[index] Integer modifier to distinguish multiple entries with the same `label`.

userRoutine Name of user-supplied subroutine to be associated with the `label`, specified as a character string.

The subroutine must have the exact interface shown in `ESMF_MethodStateAdd` for the `userRoutine` argument. Arguments in `userRoutine` must not be declared as optional, and the types, intent and order must match. Prior to Fortran-2008, the subroutine must be either a module scope procedure, or an external procedure that has a matching interface block specified for it. An internal procedure which is contained within another procedure must not be used. From Fortran-2008 onwards, an internal procedure contained within either a main program or a module procedure may be used. If the internal procedure is contained within a module procedure, it is subject to initialization requirements. See: 16.4.9

[sharedObj] Name of shared object that contains `userRoutine`. If the `sharedObj` argument is not provided the executable itself will be searched for `userRoutine`.

[rc] Return code; equals `ESMF_SUCCESS` if there are no errors.

23.4.13 ESMF_MethodExecute - Execute user method attached to CplComp

INTERFACE:

```
! Private name; call using ESMF_MethodExecute()
recursive subroutine ESMF_MethodCplCompExecute(cplcomp, label, index, existflag, &
  userRc, rc)
```

ARGUMENTS:

```
type(ESMF_CplComp)                      :: cplcomp
character(len=*), intent(in)            :: label
integer,          intent(in),  optional :: index
logical,          intent(out), optional :: existflag
integer,          intent(out), optional :: userRc
integer,          intent(out), optional :: rc
```

DESCRIPTION:

Execute attached method.

The arguments are:

cplcomp The `ESMF_CplComp` object holding the attachable method.

label Label of method.

[index] Integer modifier to distinguish multiple entries with the same `label`.

[existflag] Returned `.true.` indicates that the method specified by `label` exists and was executed. A return value of `.false.` indicates that the method does not exist and consequently was not executed. By default, i.e. if `existflag` was not specified, the latter condition will lead to `rc` not equal `ESMF_SUCCESS` being returned. However, if `existflag` was specified, a method not existing is not an error condition.

[userRc] Return code set by attached method before returning.

[rc] Return code; equals `ESMF_SUCCESS` if there are no errors.

23.4.14 ESMF_MethodExecute - Execute user method attached to GridComp

INTERFACE:

```
! Private name; call using ESMF_MethodExecute()
recursive subroutine ESMF_MethodGridCompExecute(gcomp, label, index, existflag, &
  userRc, rc)
```

ARGUMENTS:

```
type(ESMF_GridComp)                     :: gcomp
character(len=*), intent(in)            :: label
integer,          intent(in),  optional :: index
logical,          intent(out), optional :: existflag
integer,          intent(out), optional :: userRc
integer,          intent(out), optional :: rc
```

DESCRIPTION:

Execute attached method.

The arguments are:

gcomp The `ESMF_GridComp` object holding the attachable method.

label Label of method.

[index] Integer modifier to distinguish multiple entries with the same `label`.

[existflag] Returned `.true.` indicates that the method specified by `label` exists and was executed. A return value of `.false.` indicates that the method does not exist and consequently was not executed. By default, i.e. if `existflag` was not specified, the latter condition will lead to `rc` not equal `ESMF_SUCCESS` being returned. However, if `existflag` was specified, a method not existing is not an error condition.

[userRc] Return code set by attached method before returning.

[rc] Return code; equals `ESMF_SUCCESS` if there are no errors.

23.4.15 ESMF_MethodExecute - Execute user method attached to State

INTERFACE:

```
! Private name; call using ESMF_MethodExecute()
recursive subroutine ESMF_MethodStateExecute(state, label, index, existflag, &
  userRc, rc)
```

ARGUMENTS:

```
type(ESMF_State)                        :: state
character(len=*), intent(in)            :: label
integer,          intent(in),  optional :: index
logical,          intent(out), optional :: existflag
integer,          intent(out), optional :: userRc
integer,          intent(out), optional :: rc
```

DESCRIPTION:

Execute attached method.

The arguments are:

state The `ESMF_State` object holding the attachable method.

label Label of method.

[index] Integer modifier to distinguish multiple entries with the same `label`.

[existflag] Returned `.true.` indicates that the method specified by `label` exists and was executed. A return value of `.false.` indicates that the method does not exist and consequently was not executed. By default, i.e. if `existflag` was not specified, the latter condition will lead to `rc` not equal `ESMF_SUCCESS` being returned. However, if `existflag` was specified, a method not existing is not an error condition.

[userRc] Return code set by attached method before returning.

[rc] Return code; equals `ESMF_SUCCESS` if there are no errors.

23.4.16 ESMF_MethodGet - Get info about user method attached to CplComp

INTERFACE:

```
! Private name; call using ESMF_MethodGet()
subroutine ESMF_MethodCplCompGet(cplcomp, label, index, isPresent, rc)
```

ARGUMENTS:

```
type(ESMF_CplComp)                      :: cplcomp
character(len=*), intent(in)            :: label
integer,          intent(in),  optional :: index
logical,          intent(out), optional :: isPresent
integer,          intent(out), optional :: rc
```

DESCRIPTION:

Access information about attached method.

The arguments are:

cplcomp The `ESMF_CplComp` object holding the attachable method.

label Label of method.

[index] Integer modifier to distinguish multiple entries with the same `label`.

[isPresent] `.true.` if a method was attached for `label/index`. `.false.` otherwise.

[rc] Return code; equals `ESMF_SUCCESS` if there are no errors.

23.4.17 ESMF_MethodGet - Get info about user methods attached to CplComp

INTERFACE:

```
! Private name; call using ESMF_MethodGet()
subroutine ESMF_MethodCplCompGetList(cplcomp, labelList, rc)
```

ARGUMENTS:

```
type(ESMF_CplComp)                                  :: cplcomp
character(len=:), allocatable, intent(out)          :: labelList(:)
integer,                       intent(out), optional :: rc
```

DESCRIPTION:

Access labels of all attached methods.

The arguments are:

cplcomp The `ESMF_CplComp` object holding the attachable method.

labelList List of labels of *all* the attached methods. On return, it will be allocated with as many list elements as there are attached methods. The length of each label in `labelList` is that of the largest method label currently attached. Elements with shorter labels are padded with white spaces.

[rc] Return code; equals `ESMF_SUCCESS` if there are no errors.

23.4.18 ESMF_MethodGet - Get info about user method attached to GridComp

INTERFACE:

```
! Private name; call using ESMF_MethodGet()
subroutine ESMF_MethodGridCompGet(gcomp, label, index, isPresent, rc)
```

ARGUMENTS:

```
type(ESMF_GridComp)                      :: gcomp
character(len=*), intent(in)             :: label
integer,          intent(in),  optional :: index
logical,          intent(out), optional :: isPresent
integer,          intent(out), optional :: rc
```

DESCRIPTION:

Access information about attached method.

The arguments are:

gcomp The `ESMF_GridComp` object holding the attachable method.

label Label of method.

[index] Integer modifier to distinguish multiple entries with the same `label`.

[isPresent] `.true.` if a method was attached for `label`/`index`. `.false.` otherwise.

[rc] Return code; equals `ESMF_SUCCESS` if there are no errors.

23.4.19 ESMF_MethodGet - Get info about user methods attached to GridComp

INTERFACE:

```
! Private name; call using ESMF_MethodGet()
subroutine ESMF_MethodGridCompGetList(gcomp, labelList, rc)
```

ARGUMENTS:

```
type(ESMF_GridComp)                                  :: gcomp
character(len=:), allocatable, intent(out)           :: labelList(:)
integer,                       intent(out), optional :: rc
```

DESCRIPTION:

Access labels of all attached methods.

The arguments are:

gcomp The `ESMF_GridComp` object holding the attachable method.

labelList List of labels of *all* the attached methods. On return, it will be allocated with as many list elements as there are attached methods. The length of each label in `labelList` is that of the largest method label currently attached. Elements with shorter labels are padded with white spaces.

[rc] Return code; equals `ESMF_SUCCESS` if there are no errors.

23.4.20 ESMF_MethodGet - Get info about user method attached to State

INTERFACE:

```
! Private name; call using ESMF_MethodGet()
subroutine ESMF_MethodStateGet(state, label, index, isPresent, rc)
```

ARGUMENTS:

```
type(ESMF_State)                        :: state
character(len=*), intent(in)            :: label
integer,          intent(in),  optional :: index
logical,          intent(out), optional :: isPresent
integer,          intent(out), optional :: rc
```

DESCRIPTION:

Access information about attached method.

The arguments are:

state The `ESMF_State` object holding the attachable method.

label Label of method.

[index] Integer modifier to distinguish multiple entries with the same `label`.

[isPresent] `.true.` if a method was attached for `label`/`index`. `.false.` otherwise.

[rc] Return code; equals `ESMF_SUCCESS` if there are no errors.

23.4.21 ESMF_MethodGet - Get info about user methods attached to State

INTERFACE:

```
! Private name; call using ESMF_MethodGet()
subroutine ESMF_MethodStateGetList(state, labelList, rc)
```

ARGUMENTS:

```
type(ESMF_State)                                      :: state
character(len=:), allocatable, intent(out)            :: labelList(:)
integer,                       intent(out), optional  :: rc
```

DESCRIPTION:

Access labels of all attached methods.

The arguments are:

state The `ESMF_State` object holding the attachable method.

labelList List of labels of *all* the attached methods. On return, it will be allocated with as many list elements as there are attached methods. The length of each label in `labelList` is that of the largest method label currently attached. Elements with shorter labels are padded with white spaces.

[rc] Return code; equals `ESMF_SUCCESS` if there are no errors.

23.4.22 ESMF_MethodRemove - Remove user method attached to CplComp

INTERFACE:

```
! Private name; call using ESMF_MethodRemove()
subroutine ESMF_MethodCplCompRemove(cplcomp, label, index, rc)
```

ARGUMENTS:

```
type(ESMF_CplComp)                      :: cplcomp
character(len=*), intent(in)            :: label
integer,          intent(in),  optional :: index
integer,          intent(out), optional :: rc
```

DESCRIPTION:

Remove attached method.

The arguments are:

cplcomp The `ESMF_CplComp` object holding the attachable method.

label Label of method.

[index] Integer modifier to distinguish multiple entries with the same `label`.

[rc] Return code; equals `ESMF_SUCCESS` if there are no errors.

23.4.23 ESMF_MethodRemove - Remove user method attached to GridComp

INTERFACE:

```
! Private name; call using ESMF_MethodRemove()
subroutine ESMF_MethodGridCompRemove(gcomp, label, index, rc)
```

ARGUMENTS:

```
type(ESMF_GridComp)                        :: gcomp
character(len=*),  intent(in)              :: label
 integer,          intent(in),  optional :: index
integer,           intent(out), optional :: rc
```

DESCRIPTION:

Remove attached method.

The arguments are:

gcomp The `ESMF_GridComp` object holding the attachable method.

label Label of method.

[index] Integer modifier to distinguish multiple entries with the same `label`.

[rc] Return code; equals `ESMF_SUCCESS` if there are no errors.

23.4.24 ESMF_MethodRemove - Remove user method attached to State

INTERFACE:

```
! Private name; call using ESMF_MethodRemove()
subroutine ESMF_MethodStateRemove(state, label, index, rc)
```

ARGUMENTS:

```
type(ESMF_State)                          :: state
character(len=*), intent(in)              :: label
integer,          intent(in),  optional :: index
integer,          intent(out), optional :: rc
```

DESCRIPTION:

Remove attached method.

The arguments are:

state The `ESMF_State` object holding the attachable method.

label Label of method.

[index] Integer modifier to distinguish multiple entries with the same `label`.

[rc] Return code; equals `ESMF_SUCCESS` if there are no errors.

Figure 11: The diagram describes the ESMF Web Services software architecture. The architecture defines a multi-tiered set of applications that provide a flexible approach for accessing model components.

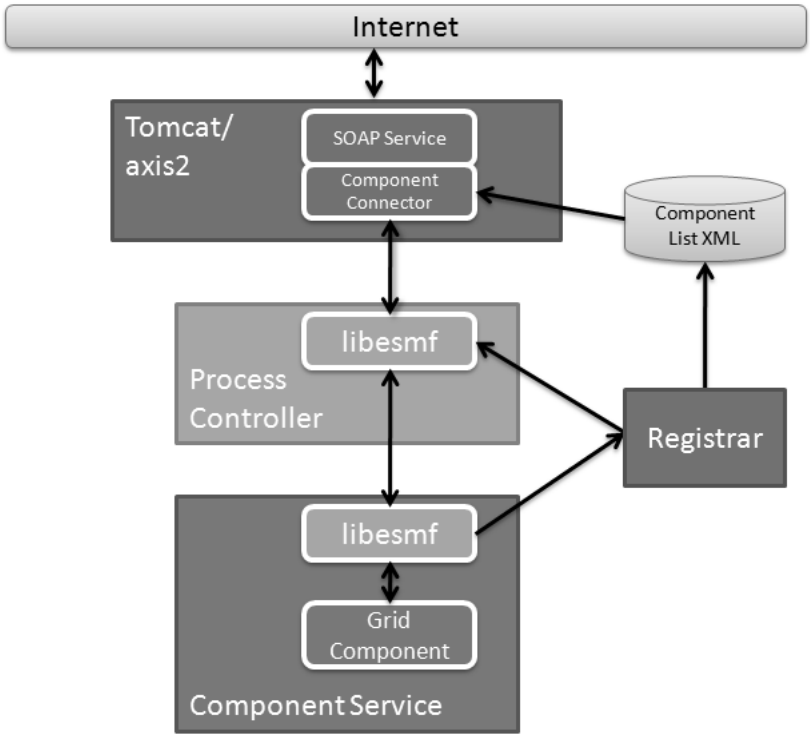

24 Web Services

24.1 Description

The goal of the ESMF Web Services is to provide the tools to allow ESMF Users to make their Components available via a web service. The first step is to make the Component a service, and then make it accessible via the Web.

At the heart of this architecture is the Component Service; this is the application that does the model work. The ESMF Web Services part provides a way to make the model accessible via a network API (Application Programming Interface). ESMF provides the tools to turn a model component into a service as well as the tools to access the service from the network.

The Process Controller is a stand-alone application that provides a control mechanism between the end user and the Component Service. The Process Controller is responsible for managing client information as well as restricting client access to a Component Service. (The role of the Process Controller is expected to expand in the future.)

The tomcat/axis2 application provides the access via the Web using standard SOAP protocols. Part of this application includes the SOAP interface definition (using a WSDL file) as well as some java code that provides the access to the Process Controller application.

Finally, the Registrar maintains a list of Component Services that are currently available; Component Services register themselves with the Registrar when they startup, and unregister themselves when they shutdown. The list of available

services is maintained in an XML file and is accessible from the Registrar using its network API.

24.1.1 Creating a Service around a Component

24.1.2 Code Modifications

One of the goals in providing the tools to make Components into services was to make the process as simple and easy as possible. Any model component that has been implemented using the ESMF Component Framework can easily be turned into a Component Services with just a minor change to the Application driver code. (For details on the ESMF Framework, see the ESMF Developers Documentation.)

The primary function in ESMF Web Services is the ESMF_WebServicesLoop routine. This function registers the Component Service with the Registrar and then sets up a network socket service that listens for requests from a client. It starts a loop that waits for incoming requests and manages the routing of these requests to all PETs. It is also responsible for making sure the appropriate ESMF routine (ESMF_Initialize, ESMF_Run or ESMF_Finalize) is called based on the incoming request. When the client has completed its interaction with the Component Service, the loop will be terminated and it will unregister the Component Service from the Registrar.

To make all of this happen, the Application Driver just needs to replace its calls to ESMF_Initialize, ESMF_Run, and ESMF_Finalize with a single call to ESMF_WebServicesLoop.

```
use ESMF_WebServMod
....

call ESMF_WebServicesLoop(gridComponent, portNumber, returnCode)
```

That's all there is to turning an ESMF Component into a network-accessible ESMF Component Service. For a detailed example of an ESMF Component turned into an ESMF Component Service, see the Examples in the Web Services section of the Developer' Guide.

24.1.3 Accessing the Service

Now that the Component is available as a service, it can be accessed remotely by any client that can communicate via TCP sockets. The ESMF library, in addition to providing the service tools, also provides the classes to create C++ clients to access the Component Service via the socket interface.

However, the goal of ESMF Web Services is to make an ESMF Component accessible through a standard web service, which is accomplished through the Process Controller and the Tomcat/Axis2 applications

24.1.4 Client Application via C++ API

Interfacing to a Component service is fairly simple using the ESMF library. The following code is a simple example of how to interface to a Component Service in C++ and request the initialize operation (the entire sample client can be found in the Web Services examples section of the ESMF Distribution):

```
#include "ESMCI_WebServCompSvrClient.h"
```

```
int  main(int  argc, char*  argv[])
{
        int    portNum = 27060;
           int    clientId = 101;
        int    rc = ESMF_SUCCESS;

        ESMCI::ESMCI_WebServCompSvrClient
                        client("localhost", portNum, clientId);

        rc = client.init();
        printf("Initialize return code: %d\n", rc);
}
```

To see a complete description of the NetEsmfClient class, refer to the netesmf library section of the Web Services Reference Manual.

24.1.5 Process Controller

The Process Controller is basically just a instance of a C++ client application. It manages client access to the Component Service (only 1 client can access the service at a time), and will eventually be responsible for starting up and shutting down instances of Component Services (planned for a future release). The Process Controller application is built with the ESMF library and is included in the apps section of the distribution.

24.1.6 Tomcat/Axis2

The Tomcat/Axis2 "application" is essentially the Apache Tomcat server using the Apache Axis2 servlet to implement web services using SOAP protocols. The web interface is defined by a WSDL file, and its implementation is handled by the Component Connector java code. Tomcat and Axis2 are both open source projects that should be downloaded from the Apache web site, but the WSDL file, the Component Connector java code, and all required software for supporting the interface can be found next to the ESMF distribution in the web_services_server directory. This code is not included with the ESMF distribution because they can be distributed and installed independent of each other.

24.2 Use and Examples

The following examples demonstrate how to use ESMF Web Services.

24.2.1 Making a Component available through ESMF Web Services

In this example, a standard ESMF Component is made available through the Web Services interface.

The first step is to make sure your callback routines for initialize, run and finalize are setup. This is done by creating a register routine that sets the entry points for each of these callbacks. In this example, we've packaged it all up into a separate module.

```
module ESMF_WebServUserModel
```

```
! ESMF Framework module
use ESMF

implicit none

public ESMF_WebServUserModelRegister

contains

!-------------------------------------------------------------------------
!  The Registration routine
!
subroutine ESMF_WebServUserModelRegister(comp, rc)
  type(ESMF_GridComp)  :: comp
  integer, intent(out) :: rc

  ! Initialize return code
  rc = ESMF_SUCCESS

  print *, "User Comp1 Register starting"

  ! Register the callback routines.

  call ESMF_GridCompSetEntryPoint(comp, ESMF_METHOD_INITIALIZE, &
                                  userRoutine=user_init, rc=rc)
  if (rc/=ESMF_SUCCESS) return ! bail out

  call ESMF_GridCompSetEntryPoint(comp, ESMF_METHOD_RUN, &
                                  userRoutine=user_run, rc=rc)
  if (rc/=ESMF_SUCCESS) return ! bail out

  call ESMF_GridCompSetEntryPoint(comp, ESMF_METHOD_FINALIZE, &
                                  userRoutine=user_final, rc=rc)
  if (rc/=ESMF_SUCCESS) return ! bail out

  print *, "Registered Initialize, Run, and Finalize routines"
  print *, "User Comp1 Register returning"

end subroutine

!-------------------------------------------------------------------------
!  The Initialization routine
!
subroutine user_init(comp, importState, exportState, clock, rc)
  type(ESMF_GridComp)  :: comp
  type(ESMF_State)     :: importState, exportState
  type(ESMF_Clock)     :: clock
  integer, intent(out) :: rc

  ! Initialize return code
  rc = ESMF_SUCCESS

  print *, "User Comp1 Init"

end subroutine user_init
```

```
  !------------------------------------------------------------------------
  !  The Run routine
  !
  subroutine user_run(comp, importState, exportState, clock, rc)
    type(ESMF_GridComp)  :: comp
    type(ESMF_State)     :: importState, exportState
    type(ESMF_Clock)     :: clock
    integer, intent(out) :: rc

    ! Initialize return code
    rc = ESMF_SUCCESS

    print *, "User Comp1 Run"

  end subroutine user_run

  !------------------------------------------------------------------------
  !  The Finalization routine
  !
  subroutine user_final(comp, importState, exportState, clock, rc)
    type(ESMF_GridComp)  :: comp
    type(ESMF_State)     :: importState, exportState
    type(ESMF_Clock)     :: clock
    integer, intent(out) :: rc

    ! Initialize return code
    rc = ESMF_SUCCESS

    print *, "User Comp1 Final"

  end subroutine user_final

end module ESMF_WebServUserModel
```

The actual driver code then becomes very simple; ESMF is initialized, the component is created, the callback functions for the component are registered, and the Web Service loop is started.

```
program WebServicesEx
#include "ESMF.h"

  ! ESMF Framework module
  use ESMF
  use ESMF_TestMod

  use ESMF_WebServMod
  use ESMF_WebServUserModel

  implicit none

  ! Local variables
  type(ESMF_GridComp) :: comp1     !! Grid Component
  integer             :: rc        !! Return Code
  integer             :: finalrc  !! Final return code
  integer             :: portNum   !! The port number for the listening socket
```

A listening socket will be created on the local machine with the specified port number. This socket is used by the service to wait for and receive requests from the client. Check with your system administrator to determine an appropriate port to use for your service.

```
  finalrc = ESMF_SUCCESS

  call ESMF_Initialize(defaultlogfilename="WebServicesEx.Log", &
                   logkindflag=ESMF_LOGKIND_MULTI, rc=rc)


  ! create the grid component
  comp1 = ESMF_GridCompCreate(name="My Component", rc=rc)


  ! Set up the register routine
  call ESMF_GridCompSetServices(comp1, &
          userRoutine=ESMF_WebServUserModelRegister, rc=rc)


  portNum = 27060

  ! Call the Web Services Loop and wait for requests to come in
  !call ESMF_WebServicesLoop(comp1, portNum, rc=rc)
```

The call to ESMF_WebServicesLoop will setup the listening socket for your service and will wait for requests from a client. As requests are received, the Web Services software will process the requests and then return to the loop to continue to wait.

The 3 main requests processed are INIT, RUN, and FINAL. These requests will then call the appropriate callback routine as specified in your register routine (as specified in the ESMF_GridCompSetServices call). In this example, when the INIT request is received, the user_init routine found in the ESMF_WebServUserModel module is called.

One other request is also processed by the Component Service, and that is the EXIT request. When this request is received, the Web Services loop is terminated and the remainder of the code after the ESMF_WebServicesLoop call is executed.

```
  call ESMF_Finalize(rc=rc)


end program WebServicesEx
```

24.3 Restrictions and Future Work

1. **Manual Control of Process.** Currently, the Component Service must be manually started and stopped. Future plans include having the Process Controller be responsible for controlling the Component Service processes.

2. **Data Streaming.** While data can be streamed from the web server to the client, it is not yet getting the data directly from the Component Service. Instead, the Component Service exports the data to a file which the Process Controller can read and return across the network interface. The data streaming capabilities will be a major component of future improvements to the Web Services architecture.

24.4 Class API

24.4.1 ESMF_WebServicesLoop

INTERFACE:

```
subroutine ESMF_WebServicesLoop(comp, portNum, clientId, registrarHost, rc)
```

ARGUMENTS:

```
type(ESMF_GridComp)                          :: comp
integer,            intent(inout), optional :: portNum
character(len=*),   intent(in),    optional, target :: clientId
character(len=*),   intent(in),    optional, target :: registrarHost
integer,            intent(out),   optional :: rc
```

DESCRIPTION:

Encapsulates all of the functionality necessary to setup a component as a component service. On the root PET, it registers the component service and then enters into a loop that waits for requests on a socket. The loop continues until an "exit" request is received, at which point it exits the loop and unregisters the service. On any PET other than the root PET, it sets up a process block that waits for instructions from the root PET. Instructions will come as requests are received from the socket.

The arguments are:

[comp] `ESMF_CplComp` object that represents the Grid Component for which routine is run.

[portNum] Number of the port on which the component service is listening.

[clientId] Identifier of the client responsible for this component service. If a Process Controller application manages this component service, then the clientId is provided to the component service application in the command line. Otherwise, the clientId is not necessary.

[registrarHost] Name of the host on which the Registrar is running. Needed so the component service can notify the Registrar when it is ready to receive requests from clients.

[rc] Return code; equals `ESMF_SUCCESS` if there are no errors.

24.4.2 ESMF_WebServicesCplCompLoop

INTERFACE:

```
subroutine ESMF_WebServicesCplCompLoop(comp, portNum, clientId, registrarHost, rc)
```

ARGUMENTS:

```
type(ESMF_CplComp)                          :: comp
integer,            intent(inout), optional :: portNum
character(len=*),   intent(in),    optional, target :: clientId
character(len=*),   intent(in),    optional, target :: registrarHost
integer,            intent(out),   optional :: rc
```

DESCRIPTION:

Encapsulates all of the functionality necessary to setup a component as a component service. On the root PET, it registers the component service and then enters into a loop that waits for requests on a socket. The loop continues until an "exit" request is received, at which point it exits the loop and unregisters the service. On any PET other than the root PET, it sets up a process block that waits for instructions from the root PET. Instructions will come as requests are received from the socket.

The arguments are:

[comp] `ESMF_CplComp` object that represents the Grid Component for which routine is run.

[portNum] Number of the port on which the component service is listening.

[clientId] Identifier of the client responsible for this component service. If a Process Controller application manages this component service, then the clientId is provided to the component service application in the command line. Otherwise, the clientId is not necessary.

[registrarHost] Name of the host on which the Registrar is running. Needed so the component service can notify the Registrar when it is ready to receive requests from clients.

[rc] Return code; equals `ESMF_SUCCESS` if there are no errors.

Part IV

Infrastructure: Fields and Grids

25 Overview of Data Classes

The ESMF infrastructure data classes are part of the framework's hierarchy of structures for handling Earth system model data and metadata on parallel platforms. The hierarchy is in complexity; the simplest data class in the infrastructure represents a distributed data array and the most complex data class represents a bundle of physical fields that are discretized on the same grid. Data class methods are called both from user-written code and from other classes internal to the framework.

Data classes are distributed over **DE**s, or **Decomposition Elements**. A DE represents a piece of a decomposition. A DELayout is a collection of DEs with some associated connectivity that describes a specific distribution. For example, the distribution of a grid divided into four segments in the x-dimension would be expressed in ESMF as a DELayout with four DEs lying along an x-axis. This abstract concept enables a data decomposition to be defined in terms of threads, MPI processes, virtual decomposition elements, or combinations of these without changes to user code. This is a primary strategy for ensuring optimal performance and portability for codes using ESMF for communications.

ESMF data classes provide a standard, convenient way for developers to collect together information related to model or observational data. The information assembled in a data class includes a data pointer, a set of attributes (e.g. units, although attributes can also be user-defined), and a description of an associated grid. The same set of information within an ESMF data object can be used by the framework to arrange intercomponent data transfers, to perform I/O, for communications such as gathers and scatters, for simplification of interfaces within user code, for debugging, and for other functions. This unifies and organizes codes overall so that the user need not define different representations of metadata for the same field for I/O and for component coupling.

Since it is critical that users be able to introduce ESMF into their codes easily and incrementally, ESMF data classes can be created based on native Fortran pointers. Likewise, there are methods for retrieving native Fortran pointers from within ESMF data objects. This allows the user to perform allocations using ESMF, and to retrieve Fortran arrays later for optimized model calculations. The ESMF data classes do not have associated differential operators or other mathematical methods.

For flexibility, it is not necessary to build an ESMF data object all at once. For example, it's possible to create a field but to defer allocation of the associated field data until a later time.

Key Features
Hierarchy of data structures designed specifically for the Earth system domain and high performance, parallel computing.
Multi-use ESMF structures simplify user code overall.
Data objects support incremental construction and deferred allocation.
Native Fortran arrays can be associated with or retrieved from ESMF data objects, for ease of adoption, convenience, and performance.
A variety of operations are provided for manipulating data in data objects such as regridding, redistribution, halo communication, and sparse matrix multiply.

The main classes that are used for model and observational data manipulation are as follows:

- **Array** An ESMF Array contains a data pointer, information about its associated datatype, precision, and dimension.

  Data elements in Arrays are partitioned into categories defined by the role the data element plays in distributed halo operations. Haloing - sometimes called ghosting - is the practice of copying portions of array data to multiple memory locations to ensure that data dependencies can be satisfied quickly when performing a calculation. ESMF Arrays contain an **exclusive** domain, which contains data elements updated exclusively and definitively by a given DE; a **computational** domain, which contains all data elements with values that are updated by the

DE in computations; and a **total** domain, which includes both the computational domain and data elements from other DEs which may be read but are not updated in computations.

- **ArrayBundle** ArrayBundles are collections of Arrays that are stored in a single object. Unlike FieldBundles, they don't need to be distributed the same way across PETs. The motivation for ArrayBundles is both convenience and performance.

- **Field** A Field holds model and/or observational data together with its underlying grid or set of spatial locations. It provides methods for configuration, initialization, setting and retrieving data values, data I/O, data regridding, and manipulation of attributes.

- **FieldBundle** Groups of Fields on the same underlying physical grid can be collected into a single object called a FieldBundle. A FieldBundle provides two major functions: it allows groups of Fields to be manipulated using a single identifier, for example during export or import of data between Components; and it allows data from multiple Fields to be packed together in memory for higher locality of reference and ease in subsetting operations. Packing a set of Fields into a single FieldBundle before performing a data communication allows the set to be transferred at once rather than as a Field at a time. This can improve performance on high-latency platforms.

  FieldBundle objects contain methods for setting and retrieving constituent fields, regridding, data I/O, and reordering of data in memory.

25.1 Bit-for-Bit Considerations

Bit-for-bit reproducibility is at the core of the regression testing schemes of many scientific model codes. The bit-for-bit requirement makes it easy to compare the numerical results of simulation runs using standard binary diff tools.

For the most part, ESMF methods do not modify user data numerically, and thus have no effect on the bit-for-bit characteristics of the model code. The exceptions are the regrid weight generation and the sparse matrix multiplication.

In the case of the regrid weight generation, user data is used to produce interpolation weights following specific numerical schemes. The bit-for-bit reproducibility of the generated weights depends on the implementation details. Section 25.2 provides more details about the bit-for-bit considerations with respect to the regrid weights generated by ESMF.

In the case of the sparse matrix multiplication, which is the typical method that is used to apply the regrid weights, user data is directly manipulated by ESMF. In order to help users with the implementation of their bit-for-bit requirements, while also considering the associated performance impact, the ESMF sparse matrix implementation provides three levels of bit-for-bit support. The strictest level ensures that the numerical results are bit-for-bit identical, even when executing across different numbers of PETs. In the relaxed level, bit-for-bit reproducibility is guaranteed when running across an unchanged number of PETs. The lowest level makes no guarantees about bit-for-bit reproducibility, however, it provides the greatest performance potential for those cases where numerical round-off differences are acceptable. An in-depth discussion of bit-for-bit reproducibility, and the performance aspects of route-based communication methods, such the sparse matrix multiplication, is given in section 38.2.1.

25.2 Regrid

This section describes the regridding methods provided by ESMF. Regridding, also called remapping or interpolation, is the process of changing the grid that underlies data values while preserving qualities of the original data. Different kinds of transformations are appropriate for different problems. Regridding may be needed when communicating data between Earth system model components such as land and atmosphere, or between different data sets to support operations such as visualization.

Regridding can be broken into two stages. The first stage is generation of an interpolation weight matrix that describes how points in the source grid contribute to points in the destination grid. The second stage is the multiplication of values on the source grid by the interpolation weight matrix to produce values on the destination grid. This is implemented as a parallel sparse matrix multiplication.

There are two options for accessing ESMF regridding functionality: **offline** and **integrated**. Offline regridding is a process whereby interpolation weights are generated by a separate ESMF command line tool, not within the user code. The ESMF offline regridding tool also only generates the interpolation matrix, the user is responsible for reading in this matrix and doing the actual interpolation (multiplication by the sparse matrix) in their code. Please see Section 12 for a description of the offline regridding command line tool and the options it supports. For user convenience, there is also a method interface to the offline regrid tool functionality which is described in Section 25.3.1. In contrast to offline regridding, integrated regridding is a process whereby interpolation weights are generated via subroutine calls during the execution of the user's code. In addition to generating the weights, integrated regridding can also produce a **RouteHandle** (described in Section 38.1) which allows the user to perform the parallel sparse matrix multiplication using ESMF methods. In other words, ESMF integrated regridding allows a user to perform the whole process of interpolation within their code.

To see what types of grids and other options are supported in the two types of regridding and their testing status, please see the ESMF Regridding Status webpage for this version of ESMF. Figure 25.2 shows a comparison of different regrid interfaces and where they can be found in the documentation.

The rest of this section further describes the various options available in ESMF regridding.

Name	Access via	Inputs	Outputs		Description
			Weights	RouteHandle	
ESMF_FieldRegridStore()	Subroutine call	Field object	yes	yes	Sec. 27.6.71
ESMF_FieldBundleRegridStore()	Subroutine call	Fieldbundle obj.	no	yes	Sec. 26.5.26
ESMF_RegridWeightGen()	Subroutine call	Grid files	yes	no	Sec. 25.3.1
ESMF_RegridWeightGen	Command Line Tool	Grid files	yes	no	Sec. 12

Table 1: Regrid Interfaces

25.2.1 Interpolation methods: bilinear

Bilinear interpolation calculates the value for the destination point as a combination of multiple linear interpolations, one for each dimension of the Grid. Note that for ease of use, the term bilinear interpolation is used for 3D interpolation in ESMF as well, although it should more properly be referred to as trilinear interpolation.

In 2D, ESMF supports bilinear regridding between any combination of the following:

- Structured grids (`ESMF_Grid`) composed of any number of logically rectangular tiles
- Unstructured meshes (`ESMF_Mesh`) composed of polygons with any number of sides
- A set of disconnected points (`ESMF_LocStream`) may be the destination of the regridding
- An exchange grid (`ESMF_XGrid`)

In 3D, ESMF supports bilinear regridding between any combination of the following:

- Structured grids (`ESMF_Grid`) composed of a single logically rectangular tile

- Unstructured meshes (`ESMF_Mesh`) composed of hexahedrons
- A set of disconnected points (`ESMF_LocStream`) may be the destination of the regridding

Restrictions:

- Cells which contain enough identical corners to collapse to a line or point are currently ignored
- Self-intersecting cells (e.g. a cell twisted into a bow tie) are not supported
- On a spherical grid, cells which contain an edge which extends more than half way around the sphere are not supported
- Source Fields built on a Grid which contains a DE of width less than 2 elements are not supported

To use the bilinear method the user may create their Fields on any stagger location (e.g. `ESMF_STAGGERLOC_CENTER`) for a Grid, or any Mesh location (e.g. `ESMF_MESHLOC_NODE`) for a Mesh. For either a Grid or a Mesh, the location upon which the Field is built must contain coordinates. This method will also work with a destination Field built on a LocStream that contains coordinates, or with a source or destination Field built on an XGrid.

25.2.2 Interpolation methods: higher-order patch

Patch (or higher-order) interpolation is the ESMF version of a technique called "patch recovery" commonly used in finite element modeling [25] [22]. It typically results in better approximations to values and derivatives when compared to bilinear interpolation. Patch interpolation works by constructing multiple polynomial patches to represent the data in a source cell. For 2D grids, these polynomials are currently 2nd degree 2D polynomials. One patch is constructed for each corner of the source cell, and the patch is constructed by doing a least squares fit through the data in the cells surrounding the corner. The interpolated value at the destination point is then a weighted average of the values of the patches at that point.

The patch method has a larger stencil than the bilinear, for this reason the patch weight matrix can be correspondingly larger than the bilinear matrix (e.g. for a quadrilateral grid the patch matrix is around 4x the size of the bilinear matrix). This can be an issue when performing a regrid operation close to the memory limit on a machine.

The patch method does not guarantee that after regridding the range of values in the destination field is within the range of values in the source field. For example, if the mininum value in the source field is 0.0, then it's possible that after regridding with the patch method, the destination field will contain values less than 0.0.

In 2D, ESMF supports patch regridding between any combination of the following:

- Structured Grids (`ESMF_Grid`) composed of a single logically rectangular tile
- Unstructured meshes (`ESMF_Mesh`) composed of polygons with any number of sides
- A set of disconnected points (`ESMF_LocStream`) may be the destination of the regridding
- An exchange grid (`ESMF_XGrid`)

In 3D, ESMF supports patch regridding between any combination of the following:

- NONE

Restrictions:

- Cells which contain enough identical corners to collapse to a line or point are currently ignored
- Self-intersecting cells (e.g. a cell twisted into a bow tie) are not supported
- On a spherical grid, cells which contain an edge which extends more than half way around the sphere are not supported
- Source Fields built on a Grid which contains a DE of width less than 2 elements are not supported

To use the patch method the user may create their Fields on any stagger location (e.g. `ESMF_STAGGERLOC_CENTER`) for a Grid, or any Mesh location (e.g. `ESMF_MESHLOC_NODE`) for a Mesh. For either a Grid or a Mesh, the location upon which the Field is built must contain coordinates. This method will also work with a destination Field built on a LocStream that contains coordinates, or with a source or destination Field built on an XGrid.

25.2.3 Interpolation methods: nearest source to destination

In nearest source to destination interpolation (`ESMF_REGRIDMETHOD_NEAREST_STOD`) each destination point is mapped to the closest source point. A given source point may map to multiple destination points, but no destination point will receive input from more than one source point. If two points are equally close, then the point with the smallest sequence index is arbitrarily used (i.e. the point which would have the smallest index in the weight matrix).

In 2D, ESMF supports nearest source to destination regridding between any combination of the following:

- Structured Grids (`ESMF_Grid`) composed of any number of logically rectangular tiles
- Unstructured meshes (`ESMF_Mesh`) composed of polygons with any number of sides
- A set of disconnected points (`ESMF_LocStream`)
- An exchange grid (`ESMF_XGrid`)

In 3D, ESMF supports nearest source to destination regridding between any combination of the following:

- Structured Grids (`ESMF_Grid`) composed of any number of logically rectangular tiles
- Unstructured Meshes (`ESMF_Mesh`) composed of hexahedrons (e.g. cubes) and tetrahedrons
- A set of disconnected points (`ESMF_LocStream`)

Restrictions:
NONE

To use the nearest source to destination method the user may create their Fields on any stagger location (e.g. `ESMF_STAGGERLOC_CENTER`) for a Grid, or any Mesh location (e.g. `ESMF_MESHLOC_NODE`) for a Mesh. For either a Grid or a Mesh, the location upon which the Field is built must contain coordinates. This method will also work with a source or destination Field built on a LocStream that contains coordinates, or when the source or destination Field is built on an XGrid.

25.2.4 Interpolation methods: nearest destination to source

In nearest destination to source interpolation (`ESMF_REGRIDMETHOD_NEAREST_DTOS`) each source point is mapped to the closest destination point. A given destination point may receive input from multiple source points, but no source point will map to more than one destination point. If two points are equally close, then the point with the smallest sequence index is arbitrarily used (i.e. the point which would have the smallest index in the weight matrix). Note that with this method the unmapped destination point detection currently doesn't work, so no error will be returned even if there are destination points that don't map to any source point.

In 2D, ESMF supports nearest destination to source regridding between any combination of the following:

- Structured Grids (`ESMF_Grid`) composed of any number of logically rectangular tiles
- Unstructured meshes (`ESMF_Mesh`) composed of polygons with any number of sides
- A set of disconnected points (`ESMF_LocStream`)
- An exchange grid (`ESMF_XGrid`)

In 3D, ESMF supports nearest destination to source regridding between any combination of the following:

- Structured Grids (`ESMF_Grid`) composed of any number of logically rectangular tiles
- Unstructured Meshes (`ESMF_Mesh`) composed of hexahedrons (e.g. cubes) and tetrahedrons
- A set of disconnected points (`ESMF_LocStream`)

Restrictions:

- The unmapped destination point detection doesn't currently work for this method. Even if there are unmapped points, no error will be returned.

To use the nearest destination to source method the user may create their Fields on any stagger location (e.g. `ESMF_STAGGERLOC_CENTER`) for a Grid, or any Mesh location (e.g. `ESMF_MESHLOC_NODE`) for a Mesh. For either a Grid or a Mesh, the location upon which the Field is built must contain coordinates. This method will also work with a source or destination Field built on a LocStream that contains coordinates, or when the source or destination Field is built on an XGrid.

25.2.5 Interpolation methods: first-order conservative

The goal of this method is to preserve the integral of the field across the interpolation from source to destination. (For a more in-depth description of what this preservation of the integral (i.e. conservation) means please see section 25.2.7.) In this method the value across each source cell is treated as a constant, so it will typically have a larger interpolation error than the bilinear or patch methods. The first-order method used here is similar to that described in the following paper [28].

In the first-order method, the values for a particular destination cell are a calculated as a combination of the values of the intersecting source cells. The weight of a given source cell's contribution to the total being the amount that that source cell overlaps with the destination cell. In particular, the weight is the ratio of the area of intersection of the source and destination cells to the area of the whole destination cell.

To see a description of how the different normalization options affect the values and integrals produced by the conservative methods see section 25.2.8. For Grids, Meshes, or XGrids on a sphere this method uses great circle cells, for a description of potential problems with these see 25.2.9.

In 2D, ESMF supports conservative regridding between any combination of the following:

- Structured Grids (`ESMF_Grid`) composed of any number of logically rectangular tiles
- Unstructured meshes (`ESMF_Mesh`) composed of polygons with any number of sides
- An exchange grid (`ESMF_XGrid`)

In 3D, ESMF supports conservative regridding between any combination of the following:

- Structured Grids (`ESMF_Grid`) composed of a single logically rectangular tile
- Unstructured Meshes (`ESMF_Mesh`) composed of hexahedrons (e.g. cubes) and tetrahedrons

Restrictions:

- Cells which contain enough identical corners to collapse to a line or point are optionally (via a flag) either ignored or return an error
- Self-intersecting cells (e.g. a cell twisted into a bow tie) are not supported
- On a spherical grid, cells which contain an edge which extends more than half way around the sphere are not supported
- Source or destination Fields built on a Grid which contains a DE of width less than 2 elements are not supported

To use the conservative method the user should create their Fields on the center stagger location (`ESMF_STAGGERLOC_CENTER` in 2D or `ESMF_STAGGERLOC_CENTER_VCENTER` in 3D) for Grids or the element location (`ESMF_MESHLOC_ELEMENT`) for Meshes. For Grids, the corner stagger location (`ESMF_STAGGERLOC_CORNER` in 2D or `ESMF_STAGGERLOC_CORNER_VFACE` in 3D) must contain coordinates describing the outer perimeter of the Grid cells. This method will also work when the source or destination Field is built on an XGrid.

25.2.6 Interpolation methods: second-order conservative

Like the first-order conservative method, this method's goal is to preserve the integral of the field across the interpolation from source to destination. (For a more in-depth description of what this preservation of the integral (i.e. conservation) means please see section 25.2.7.) The difference between the first and second-order conservative methods is that the second-order takes the source gradient into account, so it yields a smoother destination field that typically better matches the source field. This difference between the first and second-order methods is particularly apparent when going from a coarse source grid to a finer destination grid. Another difference is that the second-order method does not guarantee that after regridding the range of values in the destination field is within the range of values in the source field. For example, if the mininum value in the source field is 0.0, then it's possible that after regridding with the second-order method, the destination field will contain values less than 0.0. The implementation of this method is based on the one described in this paper [19].

Like the first-order method, the values for a particular destination cell with the second-order method are a combination of the values of the intersecting source cells with the weight of a given source cell's contribution to the total being

the amount that that source cell overlaps with the destination cell. However, with the second-order conservative interpolation there are additional terms that take into account the gradient of the field across the source cell. In particular, the value d for a given destination cell is calculated as:

$d = \sum_i^{intersecting-source-cells}(s_i + \nabla s_i \cdot (c_{si} - c_d))$

Where:

s_i is the intersecting source cell value.

∇s_i is the intersecting source cell gradient.

c_{si} is the intersecting source cell centroid.

c_d is the destination cell centroid.

To see a description of how the different normalization options affect the values and integrals produced by the conservative methods see section 25.2.8. For Grids, Meshes, or XGrids on a sphere this method uses great circle cells, for a description of potential problems with these see 25.2.9.

In 2D, ESMF supports second-order conservative regridding between any combination of the following:

- Structured Grids (`ESMF_Grid`) composed of any number of logically rectangular tiles
- Unstructured meshes (`ESMF_Mesh`) composed of polygons with any number of sides
- An exchange grid (`ESMF_XGrid`)

In 3D, ESMF supports second-order conservative regridding between any combination of the following:

- NONE

Restrictions:

- Cells which contain enough identical corners to collapse to a line or point are optionally (via a flag) either ignored or return an error
- Self-intersecting cells (e.g. a cell twisted into a bow tie) are not supported
- On a spherical grid, cells which contain an edge which extends more than half way around the sphere are not supported
- Source or destination Fields built on a Grid which contains a DE of width less than 2 elements are not supported

To use the second-order conservative method the user should create their Fields on the center stagger location (`ESMF_STAGGERLOC_CENTER` for Grids or the element location (`ESMF_MESHLOC_ELEMENT`) for Meshes. For Grids, the corner stagger location (`ESMF_STAGGERLOC_CORNER` in 2D must contain coordinates describing the outer perimeter of the Grid cells. This method will also work when the source or destination Field is built on an XGrid.

25.2.7 Conservation

Conservation means that the following equation will hold: $\sum^{all-source-cells}(V_{si} * A_{si}) = \sum^{all-destination-cells}(V_{dj} * A_{dj})$, where V is the variable being regridded and A is the area of a cell. The subscripts s and d refer to source and destination values, and the i and j are the source and destination grid cell indices (flattening the arrays to 1 dimension).

If the user doesn't specify a cell areas in the involved Grids or Meshes, then the areas (A) in the above equation are calculated by ESMF. For Cartesian grids, the area of a grid cell calculated by ESMF is the typical Cartesian area. For grids on a sphere, cell areas are calculated by connecting the corner coordinates of each grid cell with great circles. If the user does specify the areas in the Grid or Mesh, then the conservation will be adjusted to work for the areas provided by the user. This means that the above equation will hold, but with the areas (A) being the ones specified by the user.

The user should be aware that because of the conservation relationship between the source and destination fields, the more the total source area differs from the total destination area the more the values of the source field will differ from the corresponding values of the destination field, likely giving a higher interpolation error. It is best to have the total source and destination areas the same (this will automatically be true if no user areas are specified). For source and destination grids that only partially overlap, the overlapping regions of the source and destination should be the same.

25.2.8 The effect of normalization options on integrals and values produced by conservative methods

It is important to note that by default (i.e. using destination area normalization) conservative regridding doesn't normalize the interpolation weights by the destination fraction. This means that for a destination grid which only partially overlaps the source grid the destination field that is output from the regrid operation should be divided by the corresponding destination fraction to yield the true interpolated values for cells which are only partially covered by the source grid. The fraction also needs to be included when computing the total source and destination integrals. (To include the fraction in the conservative weights, the user can specify the fraction area normalization type. This can be done by specifying `normType=ESMF_NORMTYPE_FRACAREA` when invoking `ESMF_FieldRegridStore()`.)

For weights generated using destination area normalization (either by not specifying any normalization type or by specifying `normType=ESMF_NORMTYPE_DSTAREA`), if a destination field extends outside the unmasked source field, then the values of the cells which extend partway outside the unmasked source field are decreased by the fraction they extend outside. To correct these values, the destination field (`dst_field`) resulting from the `ESMF_FieldRegrid()` call can be divided by the destination fraction `dst_frac` from the `ESMF_FieldRegridStore()` call. The following pseudocode demonstrates how to do this:

```
for each destination element i
   if (dst_frac(i) not equal to 0.0) then
      dst_field(i)=dst_field(i)/dst_frac(i)
   end if
end for
```

For weights generated using destination area normalization (either by not specifying any normalization type or by specifying `normType=ESMF_NORMTYPE_DSTAREA`), the following pseudo-code shows how to compute the total destination integral (`dst_total`) given the destination field values (`dst_field`) resulting from the `ESMF_FieldRegrid()` call, the destination area (`dst_area`) from the `ESMF_FieldRegridGetArea()` call, and the destination fraction (`dst_frac`) from the `ESMF_FieldRegridStore()` call. As shown in the previous paragraph, it also shows how to adjust the destination field (`dst_field`) resulting from the `ESMF_FieldRegrid()` call by the fraction (`dst_frac`) from the `ESMF_FieldRegridStore()` call:

```
dst_total=0.0
for each destination element i
   if (dst_frac(i) not equal to 0.0) then
      dst_total=dst_total+dst_field(i)*dst_area(i)
      dst_field(i)=dst_field(i)/dst_frac(i)
      ! If mass computed here after dst_field adjust, would need to be:
      ! dst_total=dst_total+dst_field(i)*dst_area(i)*dst_frac(i)
   end if
end for
```

For weights generated using fraction area normalization (by specifying `normType=ESMF_NORMTYPE_FRACAREA`), no adjustment of the destination field is necessary. The following pseudo-code shows how to compute the total destination integral (`dst_total`) given the destination field values (`dst_field`) resulting from the `ESMF_FieldRegrid()` call, the destination area (`dst_area`) from the `ESMF_FieldRegridGetArea()` call, and the destination fraction (`dst_frac`) from the `ESMF_FieldRegridStore()` call:

```
dst_total=0.0
for each destination element i
     dst_total=dst_total+dst_field(i)*dst_area(i)*dst_frac(i)
end for
```

For both normalization types, the following pseudo-code shows how to compute the total source integral (`src_total`) given the source field values (`src_field`), the source area (`src_area`) from the `ESMF_FieldRegridGetArea()` call, and the source fraction (`src_frac`) from the `ESMF_FieldRegridStore()` call:

```
src_total=0.0
for each source element i
   src_total=src_total+src_field(i)*src_area(i)*src_frac(i)
end for
```

25.2.9 Great circle cells

For Grids, Meshes, or XGrids on a sphere some combinations of interpolation options (e.g. first and second-order conservative methods) use cells whose edges are great circles. This section describes some behavior that the user may not expect from these cells and some potential solutions.

A great circle edge isn't necessarily the same as a straight line in latitude longitude space. For small edges, this difference will be small, but for long edges it could be significant. This means if the user expects cell edges as straight lines in latitude longitude space, they should avoid using one large cell with long edges to compute an average over a region (e.g. over an ocean basin).

Also, the user should also avoid using cells that contain one edge that runs half way or more around the earth, because the regrid weight calculation assumes the edge follows the shorter great circle path. There isn't a unique great circle edge defined between points on the exact opposite side of the earth from one another (antipodal points). However, the user can work around both of these problem by breaking the long edge into two smaller edges by inserting an extra node, or by breaking the large target grid cells into two or more smaller grid cells. This allows the application to resolve the ambiguity in edge direction.

25.2.10 Masking

Masking is the process whereby parts of a Grid, Mesh, or LocStream can be marked to be ignored during an operation, such as when they are used in regridding. Masking can be used on a Field created from a regridding source to indicate that certain portions should not be used to generate regridded data. This is useful, for example, if a portion of the source contains unusable values. Masking can also be used on a Field created from a regridding destination to indicate that a certain portion should not receive regridded data. This is useful, for example, when part of the destination isn't being used (e.g. the land portion of an ocean grid).

The user may mask out points in the source Field or destination Field or both. To do masking the user sets mask information in the Grid (see 32.3.17), Mesh (see 34.3.11), or LocStream (see 33.2.2) upon which the Fields passed into the `ESMF_FieldRegridStore()` call are built. The `srcMaskValues` and `dstMaskValues` arguments to that call can then be used to specify which values in that mask information indicate that a location should be masked out. For example, if `dstMaskValues` is set to (/1,2/), then any location that has a value of 1 or 2 in the mask information of the Grid, Mesh or LocStream upon which the destination Field is built will be masked out.

Masking behavior differs slightly between regridding methods. For non-conservative regridding methods (e.g. bilinear or high-order patch), masking is done on points. For these methods, masking a destination point means that that point won't participate in regridding (e.g. won't be interpolated to). For these methods, masking a source point means that the entire source cell using that point is masked out. In other words, if any corner point making up a source cell is masked then the cell is masked. For conservative regridding methods (e.g. first-order conservative) masking is done on cells. Masking a destination cell means that the cell won't participate in regridding (e.g. won't be interpolated to). Similarly, masking a source cell means that the cell won't participate in regridding (e.g. won't be interpolated from). For any type of interpolation method (conservative or non-conservative) the masking is set on the location upon which the Fields passed into the regridding call are built. For example, if Fields built on `ESMF_STAGGERLOC_CENTER` are passed into the `ESMF_FieldRegridStore()` call then the masking should also be set on `ESMF_STAGGERLOC_CENTER`.

25.2.11 Extrapolation methods: overview

Extrapolation in the ESMF regridding system is a way to automatically fill some or all of the destination points left unmapped by a regridding method. Weights generated by the extrapolation method are merged into the regridding weights to yield one set of weights or routehandle. Currently extrapolation is not supported with conservative regridding methods, because doing so would result in non-conservative weights.

25.2.12 Extrapolation methods: nearest source to destination

In nearest source to destination extrapolation (`ESMF_EXTRAPMETHOD_NEAREST_STOD`) each unmapped destination point is mapped to the closest source point. A given source point may map to multiple destination points, but no destination point will receive input from more than one source point. If two points are equally close, then the point with the smallest sequence index is arbitrarily used (i.e. the point which would have the smallest index in the weight matrix).

If there is at least one unmasked source point, then this method is expected to fill all unmapped points.

25.2.13 Extrapolation methods: inverse distance weighted average

In inverse distance weighted average extrapolation (`ESMF_EXTRAPMETHOD_NEAREST_IDAVG`) each unmapped destination point is the weighted average of the closest N source points. The weight is the reciprocal of the distance

of the source point from the destination point raised to a power P. All the weights contributing to one destination point are normalized so that they sum to 1.0. The user can choose N and P when using this method, but defaults are also provided. For example, when calling `ESMF_FieldRegridStore()` N is specified via the argument `extrapNumSrcPnts` and P is specified via the argument `extrapDistExponent`.

If there is at least one unmasked source point, then this method is expected to fill all unmapped points.

25.2.14 Extrapolation methods: creep fill

In creep fill extrapolation (`ESMF_EXTRAPMETHOD_CREEP`) unmapped destination points are filled by repeatedly moving data from mapped locations to neighboring unmapped locations for a user specified number of levels. More precisely, for each creeped point, its value is the average of the values of the point's immediate neighbors in the previous level. For the first level, the values are the average of the point's immediate neighbors in the destination points mapped by the regridding method. The number of creep levels is specified by the user. For example, in ESMF_FieldRegridStore() this number of levels is specified via the `extrapNumLevels` argument.

Unlike some extrapolation methods, creep fill does not necessarily fill all unmapped destination points. Unfilled destination points are still unmapped with the usual consequences (e.g. they won't be in the resulting regridding matrix, and won't be set by the application of the regridding weights).

Because it depends on the connections in the destination grid, creep fill extrapolation is not supported when the destination Field is built on a Location Stream (ESMF_LocStream). Also, creep fill is currently only supported for 2D Grids, Meshes, or XGrids

25.2.15 Unmapped destination points

If a destination point can't be mapped to a location in the source grid by the combination of regrid method and optional follow on extrapolation method, then the user has two choices. The user may ignore those destination points that can't be mapped by setting the `unmappedaction` argument to `ESMF_UNMAPPEDACTION_IGNORE` (Ignored points won't be included in the sparse matrix or routeHandle). If the user needs the unmapped points, the `ESMF_FieldRegridStore()` method has the capability to return a list of them using the `unmappedDstList` argument. In addition to ignoring them, the user also has the option to return an error if unmapped destination points exist. This is the default behavior, so the user can either not set the `unmappedaction` argument or the user can set it to `ESMF_UNMAPPEDACTION_ERROR`. Currently, the unmapped destination error detection doesn't work with the nearest destination to source regrid method (`ESMF_REGRIDMETHOD_NEAREST_DTOS`), so with this method the regridding behaves as if `ESMF_UNMAPPEDACTION_IGNORE` is always on.

25.2.16 Spherical grids and poles

In the case that the Grid is on a sphere (`coordSys=ESMF_COORDSYS_SPH_DEG or ESMF_COORDSYS_SPH_RAD`) then the coordinates given in the Grid are interpreted as latitude and longitude values. The coordinates can either be in degrees or radians as indicated by the `coordSys` flag set during Grid creation. As is true with many global models, this application currently assumes the latitude and longitude refer to positions on a perfect sphere, as opposed to a more complex and accurate representation of the Earth's true shape such as would be used in a GIS system. (ESMF's current user base doesn't require this level of detail in representing the Earth's shape, but it could be added in the future if necessary.)

For Grids on a sphere, the regridding occurs in 3D Cartesian to avoid problems with periodicity and with the pole singularity. This library supports four options for handling the pole region (i.e. the empty area above the top row of

the source grid or below the bottom row of the source grid). Note that all of these pole options currently only work for the Fields build on the Grid class.

The first option is to leave the pole region empty (`polemethod=ESMF_POLEMETHOD_NONE`), in this case if a destination point lies above or below the top row of the source grid, it will fail to map, yielding an error (unless `unmappedaction=ESMF_UNMAPPEDACTION_IGNORE` is specified).

With the next two options (`ESMF_POLEMETHOD_ALLAVG` and `ESMF_POLEMETHOD_NPNTAVG`), the pole region is handled by constructing an artificial pole in the center of the top and bottom row of grid points and then filling in the region from this pole to the edges of the source grid with triangles. The pole is located at the average of the position of the points surrounding it, but moved outward to be at the same radius as the rest of the points in the grid. The difference between the two artificial pole options is what value is used at the pole. The option (`polemethod=ESMF_POLEMETHOD_ALLAVG`) sets the value at the pole to be the average of the values of all of the grid points surrounding the pole. The option (`polemethod=ESMF_POLEMETHOD_NPNTAVG`) allows the user to choose a number N from 1 to the number of source grid points around the pole. The value N is set via the argument `regridPoleNPnts`. For each destination point, the value at the pole is then the average of the N source points surrounding that destination point.

The last option (`polemethod=ESMF_POLEMETHOD_TEETH`) does not construct an artificial pole, instead the pole region is covered by connecting points across the top and bottom row of the source Grid into triangles. As this makes the top and bottom of the source sphere flat, for a big enough difference between the size of the source and destination pole regions, this can still result in unmapped destination points. Only pole option `ESMF_POLEMETHOD_NONE` is currently supported with the conservative interpolation methods (e.g. `regridmethod=ESMF_REGRIDMETHOD_CONSERVE`) and with the nearest neighbor interpolation options (e.g. `regridmethod=ESMF_REGRIDMETHOD_NEAREST_STOD`).

Regrid Method	Line Type	
	ESMF_LINETYPE_CART	ESMF_LINETYPE_GREAT_CIRCLE
ESMF_REGRIDMETHOD_BILINEAR	Y*	Y
ESMF_REGRIDMETHOD_PATCH	Y*	Y
ESMF_REGRIDMETHOD_NEAREST_STOD	Y*	N
ESMF_REGRIDMETHOD_NEAREST_DTOS	Y*	N
ESMF_REGRIDMETHOD_CONSERVE	N/A	Y*
ESMF_REGRIDMETHOD_CONSERVE_2ND	N/A	Y*

Table 2: Line Type Support by Regrid Method (* indicates the default)

Another variation in the regridding supported with spherical grids is **line type**. This is controlled in the `ESMF_FieldRegridStore()` method by the `lineType` argument. This argument allows the user to select the path of the line which connects two points on a sphere surface. This in turn controls the path along which distances are calculated and the shape of the edges that make up a cell. Both of these quantities can influence how interpolation weights are calculated, for example in bilinear interpolation the distances are used to calculate the weights and the cell edges are used to determine to which source cell a destination point should be mapped.

ESMF currently supports two line types: ESMF_LINETYPE_CART and ESMF_LINETYPE_GREAT_CIRCLE. The ESMF_LINETYPE_CART option specifies that the line between two points follows a straight path through the 3D Cartesian space in which the sphere is embedded. Distances are measured along this 3D Cartesian line. Under this option cells are approximated by planes in 3D space, and their boundaries are 3D Cartesian lines between their corner points. The ESMF_LINETYPE_GREAT_CIRCLE option specifies that the line between two points follows a great circle path along the sphere surface. (A great circle is the shortest path between two points on a sphere.) Distances are measured along the great circle path. Under this option cells are on the sphere surface, and their boundaries are great circle paths between their corner points.

Figure 25.2.16 shows which line types are supported for each regrid method as well as the defaults (indicated by *).

25.2.17 Vector regridding

ESMF's initial vector regridding capability is intended to give cleaner results for 2D spherical vectors expressed in terms of local directions (e.g. east and north) than regridding each vector component separately. To do this, it converts the vectors to 3D Cartesian space and then does the regridding there. This allows all the vectors participating in the regridding to have a consistent representation. After regridding, the resulting 3D vectors are then converted back to the local direction form. This entire process is expressed in the usual weight matrix and/or routeHandle form and so the typical `ESMF_FieldRegridStore()/ESMF_FieldRegrid()/ESMF_FieldRegridRelease()` regridding paradigm can be used. However, the weight matrix will be in the format that allows it to contain tensor dimension indices (i.e. the leading dimension of the `factorIndexList` will be of size 4).

In this initial version, the meaning of the different entries in the vector dimension are fixed. They will be interpreted as:

1st entry the east component of the vector

2nd entry the north component of the vector

Note that because the different components are mixed, using vector regridding with a conservative regrid method will not necessarily produce vectors whose components are conservative.

25.2.18 Troubleshooting guide

The below is a list of problems users commonly encounter with regridding and potential solutions. This is by no means an exhaustive list, so if none of these problems fit your case, or if the solutions don't fix your problem, please feel free to email esmf support (esmf_support@ucar.edu).

Problem: Regridding is too slow.

Possible Cause: The `ESMF_FieldRegridStore()` method is called more than is necessary.
The `ESMF_FieldRegridStore()` operation is a complex one and can be relatively slow for some cases (large Grids, 3D grids, etc.)

Solution: Reduce the number of `ESMF_FieldRegridStore()` calls to the minimum necessary. The routeHandle generated by the `ESMF_FieldRegridStore()` call depends on only four factors: the stagger locations that the input Fields are created on, the coordinates in the Grids the input Fields are built on at those stagger locations, the padding of the input Fields (specified by the `totalWidth` arguments in `FieldCreate`) and the size of the tensor dimensions in the input Fields (specified by the `ungridded` arguments in `FieldCreate`). For any pair of Fields which share these attributes with the Fields used in the `ESMF_FieldRegridStore` call the same routeHandle can be used. Note that the data in the Fields does NOT matter, the same routeHandle can be used no matter how the data in the Fields changes.

In particular:

- If Grid coordinates do not change during a run, then the `ESMF_FieldRegridStore()` call can be done once between a pair of Fields at the beginning and the resulting routeHandle used for each timestep during the run.

- If a pair of Fields was created with exactly the same arguments to `ESMF_FieldCreate()` as the pair of Fields used during an `ESMF_FieldRegridStore()` call, then the resulting routeHandle can also be used between that pair of Fields.

Problem: Distortions in destination Field at periodic boundary.

Possible Cause: The Grid overlaps itself. With a periodic Grid, the regrid system expects the first point to not be a repeat of the last point. In other words, regrid constructs its own connection and overlap between the first and last points of the periodic dimension and so the Grid doesn't need to contain these. If the Grid does, then this can cause problems.

Solution: Define the Grid so that it doesn't contain the overlap point. This typically means simply making the Grid one point smaller in the periodic dimension. If a Field constructed on the Grid needs to contain these overlap points then the user can use the `totalWidth` arguments to include this extra padding in the Field. Note, however, that the regrid won't update these extra points, so the user will have to do a copy to fill the points in the overlap region in the Field.

25.2.19 Restrictions and Future Work

This section contains restrictions that apply to the entire regridding system. For restrictions that apply to just one interpolation method, see the section corresponding to that method above.

- **Regridding doesn't work on a Field created on a Grid with an arbitrary distribution:** Using a Field built on a Grid with an arbitrary distribution will cause the regridding to stop with an error.

25.2.20 Design and implementation notes

The ESMF regrid weight calculation functionality has been designed to enable it to support a wide range of grid and interpolation types without needing to support each individual combination of source grid type, destination grid type, and interpolation method. To avoid the quadratic growth of the number of pairs of grid types, all grids are converted to a common internal format and the regrid weight calculation is performed on that format. This vastly reduces the variety of grids that need to be supported in the weight calculations for each interpolation method. It also has the added benefit of making it straightforward to add new grid types and to allow them to work with all the existing grid types. To hook into the existing weight calculation code, the new type just needs to be converted to the internal format.

The internal grid format used by the ESMF regrid weight calculation is a finite element unstructured mesh. This was chosen because it was the most general format and all the others could be converted to it. The ESMF finite element unstructured mesh (ESMF FEM) is similar in some respects to the SIERRA [20] package developed at Sandia National Laboratory. The ESMF code relies on some of the same underlying toolkits (e.g. Zoltan [18] library for calculating mesh partitions) and adds a layer on top that allows the calculation of regrid weights and some mesh operations (e.g. mesh redistribution) that ESMF needs. The ESMF FEM has similar notions to SIERRA about the basic structure of the mesh entities, fields, iteration and a similar notion of parallel distribution.

Currently we use the ESMF FEM internal mesh to hold the structure of our Mesh class and in our regrid weight calculation. The parts of the internal FEM code that are used/tested by ESMF are the following:

- The creation of a mesh composed of triangles and quadrilaterals or hexahedrons and tetrahedrons.
- The object relations data base to store the connections between objects (e.g. which element contains which nodes).

- The fields to hold data (e.g. coordinates). We currently only build fields on nodes and elements (2D and 3D).
- Iteration to move through mesh entities.
- The parallel code to maintain information about the distribution of the mesh across processors and to communicate data between parts of the mesh on different processors (i.e. halos).

25.3 File-based Regrid API

25.3.1 ESMF_RegridWeightGen - Generate regrid weight file from grid files

INTERFACE:

```
! Private name; call using ESMF_RegridWeightGen()
subroutine ESMF_RegridWeightGenFile(srcFile, dstFile, &
  weightFile, rhFile, regridmethod, polemethod, regridPoleNPnts, lineType, normType, &
  extrapMethod, extrapNumSrcPnts, extrapDistExponent, extrapNumLevels, &
  unmappedaction, ignoreDegenerate, srcFileType, dstFileType, &
  srcRegionalFlag, dstRegionalFlag, srcMeshname, dstMeshname,  &
  srcMissingvalueFlag, srcMissingvalueVar, &
  dstMissingvalueFlag, dstMissingvalueVar, &
  useSrcCoordFlag, srcCoordinateVars, &
  useDstCoordFlag, dstCoordinateVars, &
  useSrcCornerFlag, useDstCornerFlag, &
  useUserAreaFlag, largefileFlag, &
  netcdf4fileFlag, weightOnlyFlag, &
  tileFilePath, &
  verboseFlag, checkFlag, rc)
```

ARGUMENTS:

```
  character(len=*),             intent(in)            :: srcFile
  character(len=*),             intent(in)            :: dstFile
-- The following arguments require argument keyword syntax (e.g. rc=rc). --
  character(len=*),             intent(in),  optional :: weightFile
  character(len=*),             intent(in),  optional :: rhFile
  type(ESMF_RegridMethod_Flag), intent(in),  optional :: regridmethod
  type(ESMF_PoleMethod_Flag),   intent(in),  optional :: polemethod
  integer,                      intent(in),  optional :: regridPoleNPnts
  type(ESMF_LineType_Flag),     intent(in),  optional :: lineType
  type(ESMF_NormType_Flag),     intent(in),  optional :: normType
  type(ESMF_ExtrapMethod_Flag),   intent(in),    optional :: extrapMethod
  integer,                        intent(in),    optional :: extrapNumSrcPnts
  real,                           intent(in),    optional :: extrapDistExponent
  integer,                      intent(in), optional :: extrapNumLevels
  type(ESMF_UnmappedAction_Flag),intent(in), optional :: unmappedaction
  logical,                      intent(in),  optional :: ignoreDegenerate
  type(ESMF_FileFormat_Flag),   intent(in),  optional :: srcFileType
```

```
type(ESMF_FileFormat_Flag),   intent(in),  optional :: dstFileType
logical,                      intent(in),  optional :: srcRegionalFlag
logical,                      intent(in),  optional :: dstRegionalFlag
character(len=*),             intent(in),  optional :: srcMeshname
character(len=*),             intent(in),  optional :: dstMeshname
logical,                      intent(in),  optional :: srcMissingValueFlag
character(len=*),             intent(in),  optional :: srcMissingValueVar
logical,                      intent(in),  optional :: dstMissingValueFlag
character(len=*),             intent(in),  optional :: dstMissingValueVar
logical,                      intent(in),  optional :: useSrcCoordFlag
character(len=*),             intent(in),  optional :: srcCoordinateVars(:)
logical,                      intent(in),  optional :: useDstCoordFlag
character(len=*),             intent(in),  optional :: dstCoordinateVars(:)
logical,                      intent(in),  optional :: useSrcCornerFlag
logical,                      intent(in),  optional :: useDstCornerFlag
logical,                      intent(in),  optional :: useUserAreaFlag
logical,                      intent(in),  optional :: largefileFlag
logical,                      intent(in),  optional :: netcdf4fileFlag
logical,                      intent(in),  optional :: weightOnlyFlag
character(len=*),             intent(in),  optional :: tileFilePath
logical,                      intent(in),  optional :: verboseFlag
logical,                      intent(in),  optional :: checkFlag
integer,                      intent(out), optional :: rc
```

DESCRIPTION:

This subroutine provides the same function as the `ESMF_RegridWeightGen` application described in Section 12. It takes two grid files in NetCDF format and writes out an interpolation weight file also in NetCDF format. The interpolation weights can be generated with the bilinear (25.2.1), higher-order patch (25.2.2), or first order conservative (25.2.5) methods. The grid files can be in one of the following four formats:

- The SCRIP format (12.8.1)
- The native ESMF format for an unstructured grid (12.8.2)
- The CF Convention Single Tile File format (12.8.3)
- The proposed CF Unstructured grid (UGRID) format (12.8.4)
- The GRIDSPEC Mosaic File format (12.8.5)

The weight file is created in SCRIP format (12.9). The optional arguments allow users to specify various options to control the regrid operation, such as which pole option to use, whether to use user-specified area in the conservative regridding, or whether ESMF should generate masks using a given variable's missing value. There are also optional arguments specific to a certain type of the grid file. All the optional arguments are similar to the command line arguments for the `ESMF_RegridWeightGen` application (12.6). The acceptable values and the default value for the optional arguments are listed below.

The arguments are:

srcFile The source grid file name.

dstFile The destination grid file name.

weightFile The interpolation weight file name.

[rhFile] The RouteHandle file name.

[regridmethod] The type of interpolation. Please see Section 55.51 for a list of valid options. If not specified, defaults to `ESMF_REGRIDMETHOD_BILINEAR`.

[polemethod] A flag to indicate which type of artificial pole to construct on the source Grid for regridding. Please see Section 55.48 for a list of valid options. The default value varies depending on the regridding method and the grid type and format.

[regridPoleNPnts] If `polemethod` is set to `ESMF_POLEMETHOD_NPNTAVG`, this argument is required to specify how many points should be averaged over at the pole.

[lineType] This argument controls the path of the line which connects two points on a sphere surface. This in turn controls the path along which distances are calculated and the shape of the edges that make up a cell. Both of these quantities can influence how interpolation weights are calculated. As would be expected, this argument is only applicable when `srcField` and `dstField` are built on grids which lie on the surface of a sphere. Section 55.36 shows a list of valid options for this argument. If not specified, the default depends on the regrid method. Section 55.36 has the defaults by line type. Figure 25.2.16 shows which line types are supported for each regrid method as well as showing the default line type by regrid method.

[normType] This argument controls the type of normalization used when generating conservative weights. This option only applies to weights generated with `regridmethod=ESMF_REGRIDMETHOD_CONSERVE`. Please see Section 55.45 for a list of valid options. If not specified `normType` defaults to `ESMF_NORMTYPE_DSTAREA`.

[extrapMethod] The type of extrapolation. Please see Section 55.18 for a list of valid options. If not specified, defaults to `ESMF_EXTRAPMETHOD_NONE`.

[extrapNumSrcPnts] The number of source points to use for the extrapolation methods that use more than one source point (e.g. `ESMF_EXTRAPMETHOD_NEAREST_IDAVG`). If not specified, defaults to 8.

[extrapDistExponent] The exponent to raise the distance to when calculating weights for the `ESMF_EXTRAPMETHOD_NEAREST_IDAVG` extrapolation method. A higher value reduces the influence of more distant points. If not specified, defaults to 2.0.

[unmappedaction] Specifies what should happen if there are destination points that can't be mapped to a source cell. Please see Section 55.62 for a list of valid options. If not specified, `unmappedaction` defaults to `ESMF_UNMAPPEDACTION_ERROR`.

[ignoreDegenerate] Ignore degenerate cells when checking the input Grids or Meshes for errors. If this is set to true, then the regridding proceeds, but degenerate cells will be skipped. If set to false, a degenerate cell produces an error. If not specified, `ignoreDegenerate` defaults to false.

[srcFileType] The file format of the source grid. Please see Section 55.20 for a list of valid options. If not specifed, the program will determine the file format automatically.

[dstFileType] The file format of the destination grid. Please see Section 55.20 for a list of valid options. If not specifed, the program will determine the file format automatically.

[srcRegionalFlag] If .TRUE., the source grid is a regional grid, otherwise, it is a global grid. The default value is .FALSE.

[dstRegionalFlag] If .TRUE., the destination grid is a regional grid, otherwise, it is a global grid. The default value is .FALSE.

[srcMeshname] If the source file is in UGRID format, this argument is required to define the dummy variable name in the grid file that contains the mesh topology info.

[dstMeshname] If the destination file is in UGRID format, this argument is required to define the dummy variable name in the grid file that contains the mesh topology info.

[srcMissingValueFlag] If .TRUE., the source grid mask will be constructed using the missing values of the variable defined in `srcMissingValueVar`. This flag is only used for the grid defined in the GRIDSPEC or the UGRID file formats. The default value is .FALSE..

[srcMissingValueVar] If `srcMissingValueFlag` is .TRUE., the argument is required to define the variable name whose missing values will be used to construct the grid mask. It is only used for the grid defined in the GRIDSPEC or the UGRID file formats.

[dstMissingValueFlag] If .TRUE., the destination grid mask will be constructed using the missing values of the variable defined in `dstMissingValueVar`. This flag is only used for the grid defined in the GRIDSPEC or the UGRID file formats. The default value is .FALSE..

[dstMissingValueVar] If `dstMissingValueFlag` is .TRUE., the argument is required to define the variable name whose missing values will be used to construct the grid mask. It is only used for the grid defined in the GRIDSPEC or the UGRID file formats.

[useSrcCoordFlag] If .TRUE., the coordinate variables defined in `srcCoordinateVars` will be used as the longitude and latitude variables for the source grid. This flag is only used for the GRIDSPEC file format. The default is .FALSE.

[srcCoordinateVars] If `useSrcCoordFlag` is .TRUE., this argument defines the longitude and ! latitude variables in the source grid file to be used for the regrid. This argument is only used when the grid file is in GRIDSPEC format. `srcCoordinateVars` should be a array of 2 elements.

[useDstCoordFlag] If .TRUE., the coordinate variables defined in `dstCoordinateVars` will be used as the longitude and latitude variables for the destination grid. This flag is only used for the GRIDSPEC file format. The default is .FALSE.

[dstCoordinateVars] If `useDstCoordFlag` is .TRUE., this argument defines the longitude and latitude variables in the destination grid file to be used for the regrid. This argument is only used when the grid file is in GRIDSPEC format. `dstCoordinateVars` should be a array of 2 elements.

[useSrcCornerFlag] If `useSrcCornerFlag` is .TRUE., the corner coordinates of the source file will be used for regridding. Otherwise, the center coordinates will be us ed. The default is .FALSE. The corner stagger is not supported for the SCRIP formatted input grid or multi-tile GRIDSPEC MOSAIC input grid.

[useDstCornerFlag] If `useDstCornerFlag` is .TRUE., the corner coordinates of the destination file will be used for regridding. Otherwise, the center coordinates will be used. The default is .FALSE. The corner stagger is not supported for the SCRIP formatted input grid or multi-tile GRIDSPEC MOSAIC input grid.

[useUserAreaFlag] If .TRUE., the element area values defined in the grid files are used. Only the SCRIP and ESMF format grid files have user specified areas. This flag is only used for conservative regridding. The default is .FALSE..

[largefileFlag] If .TRUE., the output weight file is in NetCDF 64bit offset format. The default is .FALSE..

[netcdf4fileFlag] If .TRUE., the output weight file is in NetCDF4 file format. The default is .FALSE..

[weightOnlyFlag] If .TRUE., the output weight file only contains factorList and factorIndexList. The default is .FALSE..

[tileFilePath] Optional argument to define the path where the tile files reside. If it is given, it overwrites the path defined in `gridlocation` variable in the mosaic file.

[verboseFlag] If .TRUE., it will print summary information about the regrid parameters, default to .FALSE..

[checkFlag] checkFlag value to pass into ESMF_FieldRegridStore(), if not provided has same default as ESMF_FieldRegridStore() which is false.

[rc] Return code; equals `ESMF_SUCCESS` if there are no errors.

25.3.2 ESMF_RegridWeightGen - Generate regrid routeHandle and an optional weight file from grid files with user-specified distribution

INTERFACE:

```
! Private name; call using ESMF_RegridWeightGen()
subroutine ESMF_RegridWeightGenDG(srcFile, dstFile, regridRouteHandle, &
  srcElementDistgrid, dstElementDistgrid, &
  srcNodalDistgrid, dstNodalDistgrid, &
  weightFile, regridmethod, lineType, normType, &
  extrapMethod, extrapNumSrcPnts, extrapDistExponent, extrapNumLevels,&
  unmappedaction, ignoreDegenerate, useUserAreaFlag, &
  largefileFlag, netcdf4fileFlag, &
  weightOnlyFlag, verboseFlag, rc)
```

ARGUMENTS:

```
  character(len=*),             intent(in)            :: srcFile
  character(len=*),             intent(in)            :: dstFile
  type(ESMF_RouteHandle),       intent(out)           :: regridRouteHandle
-- The following arguments require argument keyword syntax (e.g. rc=rc). --
  type(ESMF_DistGrid),          intent(in),  optional :: srcElementDistgrid
  type(ESMF_DistGrid),          intent(in),  optional :: dstElementDistgrid
  character(len=*),             intent(in),  optional :: weightFile
  type(ESMF_DistGrid),          intent(in),  optional :: srcNodalDistgrid
  type(ESMF_DistGrid),          intent(in),  optional :: dstNodalDistgrid
  type(ESMF_RegridMethod_Flag), intent(in),  optional :: regridmethod
  type(ESMF_LineType_Flag),     intent(in),  optional :: lineType
  type(ESMF_NormType_Flag),     intent(in),  optional :: normType
  type(ESMF_ExtrapMethod_Flag),   intent(in),    optional :: extrapMethod
  integer,                        intent(in),    optional :: extrapNumSrcPnts
  real,                           intent(in),    optional :: extrapDistExponent
  integer,                      intent(in),  optional :: extrapNumLevels
  type(ESMF_UnmappedAction_Flag),intent(in), optional :: unmappedaction
  logical,                      intent(in),  optional :: ignoreDegenerate
  logical,                      intent(in),  optional :: useUserAreaFlag
  logical,                      intent(in),  optional :: largefileFlag
  logical,                      intent(in),  optional :: netcdf4fileFlag
  logical,                      intent(in),  optional :: weightOnlyFlag
  logical,                      intent(in),  optional :: verboseFlag
  integer,                      intent(out), optional :: rc
```

DESCRIPTION:

This subroutine does online regridding weight generation from files with user specified distribution. The main differences between this API and the one in 25.3.1 are listed below:

- The input grids are always represented as `ESMF_Mesh` whether they are logically rectangular or unstructured.
- The input grids will be decomposed using a user-specified distribution instead of a fixed decomposition in the other subroutine if `srcElementDistgrid` and `dstElementDistgrid` are specified.

- The source and destination grid files have to be in the SCRIP grid file format.
- This subroutine has one additional required argument `regridRouteHandle` and four additional optional arguments: `srcElementDistgrid`, `dstElementDistgrid`, `srcNodelDistgrid` and `dstNodalDistgrid`. These four arguments are of type `ESMF_DistGrid`, they are used to define the distribution of the source and destination grid elements and nodes. The output `regridRouteHandle` allows users to regrid the field values later in the application.
- The `weightFile` argument is optional. When it is given, a weightfile will be generated as well.

The arguments are:

srcFile The source grid file name in SCRIP grid file format

dstFile The destination grid file name in SCRIP grid file format

regridRouteHandle The regrid RouteHandle returned by `ESMF_FieldRegridStore()`

srcElementDistgrid An optional distGrid that specifies the distribution of the source grid's elements. If not specified, a system-defined block decomposition is used.

dstElementDistgrid An optional distGrid that specifies the distribution of the destination grid's elements. If not specified, a system-defined block decomposition is used.

weightFile The interpolation weight file name. If present, an output weight file will be generated.

srcNodalDistgrid An optional distGrid that specifies the distribution of the source grid's nodes

dstNodalDistgrid An optional distGrid that specifies the distribution of the destination grid's nodes

[regridmethod] The type of interpolation. Please see Section 55.51 for a list of valid options. If not specified, defaults to `ESMF_REGRIDMETHOD_BILINEAR`.

[lineType] This argument controls the path of the line which connects two points on a sphere surface. This in turn controls the path along which distances are calculated and the shape of the edges that make up a cell. Both of these quantities can influence how interpolation weights are calculated. As would be expected, this argument is only applicable when `srcField` and `dstField` are built on grids which lie on the surface of a sphere. Section 55.36 shows a list of valid options for this argument. If not specified, the default depends on the regrid method. Section 55.36 has the defaults by line type. Figure 25.2.16 shows which line types are supported for each regrid method as well as showing the default line type by regrid method.

[normType] This argument controls the type of normalization used when generating conservative weights. This option only applies to weights generated with `regridmethod=ESMF_REGRIDMETHOD_CONSERVE`. Please see Section 55.45 for a list of valid options. If not specified `normType` defaults to `ESMF_NORMTYPE_DSTAREA`.

[extrapMethod] The type of extrapolation. Please see Section 55.18 for a list of valid options. If not specified, defaults to `ESMF_EXTRAPMETHOD_NONE`.

[extrapNumSrcPnts] The number of source points to use for the extrapolation methods that use more than one source point (e.g. `ESMF_EXTRAPMETHOD_NEAREST_IDAVG`). If not specified, defaults to 8..

[extrapDistExponent] The exponent to raise the distance to when calculating weights for the `ESMF_EXTRAPMETHOD_NEAREST_IDAVG` extrapolation method. A higher value reduces the influence of more distant points. If not specified, defaults to 2.0.

[unmappedaction] Specifies what should happen if there are destination points that can't be mapped to a source cell. Please see Section 55.62 for a list of valid options. If not specified, `unmappedaction` defaults to `ESMF_UNMAPPEDACTION_ERROR`.

[ignoreDegenerate] Ignore degenerate cells when checking the input Grids or Meshes for errors. If this is set to true, then the regridding proceeds, but degenerate cells will be skipped. If set to false, a degenerate cell produces an error. If not specified, `ignoreDegenerate` defaults to false.

[useUserAreaFlag] If .TRUE., the element area values defined in the grid files are used. Only the SCRIP and ESMF format grid files have user specified areas. This flag is only used for conservative regridding. The default is .FALSE.

[largefileFlag] If .TRUE., the output weight file is in NetCDF 64bit offset format. The default is .FALSE.

[netcdf4fileFlag] If .TRUE., the output weight file is in NetCDF4 file format. The default is .FALSE.

[weightOnlyFlag] If .TRUE., the output weight file only contains factorList and factorIndexList. The default is .FALSE.

[verboseFlag] If .TRUE., it will print summary information about the regrid parameters, default to .FALSE.

[rc] Return code; equals `ESMF_SUCCESS` if there are no errors.

25.3.3 ESMF_FileRegrid - Regrid variables defined in the grid files

INTERFACE:

```
subroutine ESMF_FileRegrid(srcFile, dstFile, srcVarName, dstVarName, &
  dstLoc, srcDataFile, dstDataFile, tileFilePath, &
  dstCoordVars, regridmethod, polemethod, regridPoleNPnts, &
  unmappedaction, ignoreDegenerate, srcRegionalFlag, dstRegionalFlag, &
  verboseFlag, rc)
```

ARGUMENTS:

```
  character(len=*),             intent(in)            :: srcFile
  character(len=*),             intent(in)            :: dstFile
  character(len=*),             intent(in)            :: srcVarName
  character(len=*),             intent(in)            :: dstVarName
 -- The following arguments require argument keyword syntax (e.g. rc=rc). --
  character(len=*),             intent(in),  optional :: dstLoc
  character(len=*),             intent(in),  optional :: srcDataFile
  character(len=*),             intent(in),  optional :: dstDataFile
  character(len=*),             intent(in),  optional :: tileFilePath
  character(len=*),             intent(in),  optional :: dstCoordVars
  type(ESMF_RegridMethod_Flag), intent(in),  optional :: regridmethod
  type(ESMF_PoleMethod_Flag),   intent(in),  optional :: polemethod
  integer,                      intent(in),  optional :: regridPoleNPnts
  type(ESMF_UnmappedAction_Flag),intent(in), optional :: unmappedaction
  logical,                      intent(in),  optional :: ignoreDegenerate
  logical,                      intent(in),  optional :: srcRegionalFlag
  logical,                      intent(in),  optional :: dstRegionalFlag
  logical,                      intent(in),  optional :: verboseFlag
  integer,                      intent(out), optional :: rc
```

DESCRIPTION:

This subroutine provides the same function as the `ESMF_Regrid` application described in Section 13. It takes two grid files in NetCDF format and interpolate the variable defined in the source grid file to the destination variable using one of the ESMF supported regrid methods – bilinear (25.2.1), higher-order patch (25.2.2), first order conservative (25.2.5) or nearest neighbor methods. The grid files can be in one of the following two formats:

- The GRIDSPEC Tile grid file following the CF metadata convention (12.8.3) for logically rectangular grids
- The proposed CF Unstructured grid (UGRID) format (12.8.4) for unstructured grids.

The optional arguments allow users to specify various options to control the regrid operation, such as which pole option to use, or whether to use user-specified area in the conservative regridding. The acceptable values and the default value for the optional arguments are listed below.

The arguments are:

srcFile The source grid file name.

dstFile The destination grid file name.

srcVarName The source variable names to be regridded. If more than one, separate them by comma.

dstVarName The destination variable names to be regridded to. If more than one, separate them by comma.

[dstLoc] The destination variable's location, either 'node' or 'face'. This argument is only used when the destination grid file is UGRID, the regridding method is non-conservative and the destination variable does not exist in the destination grid file. If not specified, default is 'face'.

[srcDataFile] The input data file prefix if the srcFile is in GRIDSPEC MOSAIC fileformat. The tilename and the file extension (.nc) will be added to the prefix. The tilename is defined in the MOSAIC file using variable "gridtiles".

[dstDataFile] The output data file prefix if the dstFile is in GRIDSPEC MOSAIC fileformat. The tilename and the file extension (.nc) will be added to the prefix. The tilename is defined in the MOSAIC file using variable "gridtiles".

[tileFilePath] The alternative file path for the tile files and mosaic data files when either srcFile or dstFile is a GRIDSPEC MOSAIC grid. The path can be either relative or absolute. If it is relative, it is relative to the working directory. When specified, the gridlocation variable defined in the Mosaic file will be ignored.

[dstCoordVars] The destination coordinate variable names if the dstVarName does not exist in the dstFile

[regridmethod] The type of interpolation. Please see Section 55.51 for a list of valid options. If not specified, defaults to `ESMF_REGRIDMETHOD_BILINEAR`.

[polemethod] A flag to indicate which type of artificial pole to construct on the source Grid for regridding. Please see Section 55.48 for a list of valid options. The default value varies depending on the regridding method and the grid type and format.

[regridPoleNPnts] If `polemethod` is set to `ESMF_POLEMETHOD_NPNTAVG`, this argument is required to specify how many points should be averaged over at the pole.

[unmappedaction] Specifies what should happen if there are destination points that can't be mapped to a source cell. Please see Section 55.62 for a list of valid options. If not specified, `unmappedaction` defaults to `ESMF_UNMAPPEDACTION_ERROR`.

[ignoreDegenerate] Ignore degenerate cells when checking the input Grids or Meshes for errors. If this is set to true, then the regridding proceeds, but degenerate cells will be skipped. If set to false, a degenerate cell produces an error. If not specified, `ignoreDegenerate` defaults to false.

[srcRegionalFlag] If .TRUE., the source grid is a regional grid, otherwise, it is a global grid. The default value is .FALSE.

[dstRegionalFlag] If .TRUE., the destination grid is a regional grid, otherwise, it is a global grid. The default value is .FALSE.

[verboseFlag] If .TRUE., it will print summary information about the regrid parameters, default to .FALSE.

[rc] Return code; equals `ESMF_SUCCESS` if there are no errors.

25.4 Restrictions and Future Work

1. **32-bit index limitation:** Currently all index space dimensions in an ESMF object are represented by signed 32-bit integers. This limits the number of elements in one-dimensional objects to the 32-bit limit. This limit can be crossed by higher dimensional objects, where the product space is only limited by the 64-bit sequence index representation.

26 FieldBundle Class

26.1 Description

A FieldBundle functions mainly as a convenient container for storing similar Fields. It represents "bundles" of Fields that are discretized on the same Grid, Mesh, LocStream, or XGrid and distributed in the same manner. The FieldBundle is an important data structure because it can be added to a State, which is used for sending and receiving data between Components.

In the common case where FieldBundle is built on top of a Grid, Fields within a FieldBundle may be located at different locations relative to the vertices of their common Grid. The Fields in a FieldBundle may be of different dimensions, as long as the Grid dimensions that are distributed are the same. For example, a surface Field on a distributed lat/lon Grid and a 3D Field with an added vertical dimension on the same distributed lat/lon Grid can be included in the same FieldBundle.

FieldBundles can be created and destroyed, can have Attributes added or retrieved, and can have Fields added, removed, replaced, or retrieved. Methods include queries that return information about the FieldBundle itself and about the Fields that it contains. The Fortran data pointer of a Field within a FieldBundle can be obtained by first retrieving the Field with a call to `ESMF_FieldBundleGet()`, and then using `ESMF_FieldGet()` to get the data.

In the future FieldBundles will serve as a mechanism for performance optimization. ESMF will take advantage of the similarities of the Fields within a FieldBundle to optimize collective communication, I/O, and regridding. See Section 26.3 for a description of features that are scheduled for future work.

26.2 Use and Examples

Examples of creating, accessing and destroying FieldBundles and their constituent Fields are provided in this section, along with some notes on FieldBundle methods.

26.2.1 Creating a FieldBundle from a list of Fields

A user can create a FieldBundle from a predefined list of Fields. In the following example, we first create an `ESMF_Grid`, then build 3 different `ESMF_Fields` with different names. The `ESMF_FieldBundle` is created from the list of 3 Fields.

```
!------------------------------------------------------------------------
!   !  Create several Fields and add them to a new FieldBundle.

    grid = ESMF_GridCreateNoPeriDim(minIndex=(/1,1/), maxIndex=(/100,200/), &
                                    regDecomp=(/2,2/), name="atmgrid", rc=rc)


    call ESMF_ArraySpecSet(arrayspec, 2, ESMF_TYPEKIND_R8, rc=rc)
    if (rc /= ESMF_SUCCESS) call ESMF_Finalize(endflag=ESMF_END_ABORT)

    field(1) = ESMF_FieldCreate(grid, arrayspec, &
                                staggerloc=ESMF_STAGGERLOC_CENTER, &
                                name="temperature", rc=rc)

    field(2) = ESMF_FieldCreate(grid, arrayspec, &
```

```
                                staggerloc=ESMF_STAGGERLOC_CENTER, &
                                name="pressure", rc=rc)

    field(3) = ESMF_FieldCreate(grid, arrayspec, &
                                staggerloc=ESMF_STAGGERLOC_CENTER, &
                                name="heat flux", rc=rc)

    bundle1 = ESMF_FieldBundleCreate(fieldList=field(1:3), &
                                name="atmosphere data", rc=rc)

    print *, "FieldBundle example 1 returned"
```

26.2.2 Creating an empty FieldBundle then add one Field to it

A user can create an empty FieldBundle then add Fields to the empty FieldBundle. In the following example, we use the previously defined `ESMF_Grid` to build an `ESMF_Field`. An empty `ESMF_FieldBundle` is created, then the Field is added to the FieldBundle.

```
!-------------------------------------------------------------------------
!   !  Create an empty FieldBundle and then add a single field to it.


    simplefield = ESMF_FieldCreate(grid, arrayspec, &
                  staggerloc=ESMF_STAGGERLOC_CENTER, name="rh", rc=rc)

    bundle2 = ESMF_FieldBundleCreate(name="time step 1", rc=rc)

    call ESMF_FieldBundleAdd(bundle2, (/simplefield/), rc=rc)

    call ESMF_FieldBundleGet(bundle2, fieldCount=fieldcount, rc=rc)

    print *, "FieldBundle example 2 returned, fieldcount =", fieldcount
```

26.2.3 Creating an empty FieldBundle then add a list of Fields to it

A user can create an empty FieldBundle then add multiple Fields to the empty FieldBundle. In the following example, we use the previously defined `ESMF_Grid` and `ESMF_Fields`. An empty `ESMF_FieldBundle` is created, then three Fields are added to the FieldBundle.

```
!-------------------------------------------------------------------------
!   !  Create an empty FieldBundle and then add multiple fields to it.

    bundle3 = ESMF_FieldBundleCreate(name="southern hemisphere", rc=rc)

    call ESMF_FieldBundleAdd(bundle3, field(1:3), rc=rc)

    call ESMF_FieldBundleGet(bundle3, fieldCount=fieldcount, rc=rc)

    print *, "FieldBundle example 3 returned, fieldcount =", fieldcount
```

26.2.4 Query a Field stored in the FieldBundle by name or index

Users can query a Field stored in a FieldBundle by the Field's name or index. In the following example, the pressure Field stored in FieldBundle is queried by its name then by its index through `ESMF_FieldBundleGet()` method.

```
!-------------------------------------------------------------------------
!   !  Get a Field back from a FieldBundle, first by name and then by index.
!   !  Also get the FieldBundle name.

    call ESMF_FieldBundleGet(bundle1, "pressure", field=returnedfield1, rc=rc)


    call ESMF_FieldGet(returnedfield1, name=fname1, rc=rc)


    call ESMF_FieldBundleGet(bundle1, 2, returnedfield2, rc=rc)


    call ESMF_FieldGet(returnedfield2, name=fname2, rc=rc)


    call ESMF_FieldBundleGet(bundle1, name=bname1, rc=rc)

    print *, "FieldBundle example 4 returned, field names = ", &
                   trim(fname1), ", ", trim(fname2)
    print *, "FieldBundle name = ", trim(bname1)
```

26.2.5 Query FieldBundle for Fields list either alphabetical or in order of addition

Users can query the list of Fields stored in a FieldBundle. By default the returned list of Fields are ordered alphabetically by the Field names. Users can also retrieve the list of Fields in the order by which the Fields were added to the FieldBundle.

```
    call ESMF_FieldBundleGet(bundle1, fieldList=r_fields, rc=rc)


    do i = 1, 3
      call ESMF_FieldGet(r_fields(i), name=fname1, rc=rc)


      print *, fname1
    enddo


    call ESMF_FieldBundleGet(bundle1, fieldList=r_fields, &
      itemorderflag=ESMF_ITEMORDER_ADDORDER, rc=rc)


    do i = 1, 3
      call ESMF_FieldGet(r_fields(i), name=fname1, rc=rc)


      print *, fname1
    enddo
```

26.2.6 Create a packed FieldBundle on a Grid

Create a packed fieldbundle from user supplied field names and a packed Fortran array pointer that contains the data of the packed fields on a Grid.

Create a 2D grid of 4x1 regular decomposition on 4 PETs, each PET has 10x50 elements. The index space of the entire Grid is 40x50.

```
gridxy = ESMF_GridCreateNoPeriDim(maxIndex=(/40,50/), regDecomp=(/4,1/), rc=rc)
```

Allocate a packed Fortran array pointer containing 10 packed fields, each field has 3 time slices and uses the 2D grid created. Note that gridToFieldMap uses the position of the grid dimension as elements, 3rd element of the packedPtr is 10, 4th element of the packedPtr is 50.

```
allocate(packedPtr(10, 3, 10, 50)) ! fieldDim, time, y, x
fieldDim = 1
packedFB = ESMF_FieldBundleCreate(fieldNameList, packedPtr, gridxy, fieldDim, &
gridToFieldMap=(/3,4/), staggerloc=ESMF_Staggerloc_Center, rc=rc)
```

26.2.7 Create a packed FieldBundle on a Mesh

Similarly we could create a packed fieldbundle from user supplied field names and a packed Fortran array pointer that contains the data of the packed fields on a Mesh.

Due to the verbosity of the MeshCreate process, the code for MeshCreate is not shown below, user can either refer to the MeshCreate section 34.3.1 or examine the FieldBundleCreate example source code contained in the ESMF source distribution directly. A ESMF Mesh on 4 PETs with one mesh element on each PET is created.

Allocate the packed Fortran array pointer, the first dimension is fieldDim; second dimension is the data associated with mesh element, since there is only one mesh element on each processor in this example, the allocation is 1; last dimension is the time dimension which contains 3 time slices.

```
allocate(packedPtr3D(10, 1, 3))
fieldDim = 1
packedFB = ESMF_FieldBundleCreate(fieldNameList, packedPtr3D, meshEx, fieldDim, &
  gridToFieldMap=(/2/), meshloc=ESMF_MESHLOC_ELEMENT, rc=rc)
```

26.2.8 Destroy a FieldBundle

The user must call `ESMF_FieldBundleDestroy()` before deleting any of the Fields it contains. Because Fields can be shared by multiple FieldBundles and States, they are not deleted by this call.

```
!------------------------------------------------------------------------

     call ESMF_FieldBundleDestroy(bundle1, rc=rc)
```

26.2.9 Redistribute data from a source FieldBundle to a destination FieldBundle

The `ESMF_FieldBundleRedist` interface can be used to redistribute data from source FieldBundle to destination FieldBundle. This interface is overloaded by type and kind; In the version of `ESMF_FieldBundleRedist` without factor argument, a default value of factor 1 is used.

In this example, we first create two FieldBundles, a source FieldBundle and a destination FieldBundle. Then we use `ESMF_FieldBundleRedist` to redistribute data from source FieldBundle to destination FieldBundle.

```
! perform redist
call ESMF_FieldBundleRedistStore(srcFieldBundle, dstFieldBundle, &
     routehandle, rc=rc)

call ESMF_FieldBundleRedist(srcFieldBundle, dstFieldBundle, &
     routehandle, rc=rc)
```

26.2.10 Redistribute data from a packed source FieldBundle to a packed destination FieldBundle

The `ESMF_FieldBundleRedist` interface can be used to redistribute data from source FieldBundle to destination FieldBundle when both Bundles are packed with same number of fields.

In this example, we first create two packed FieldBundles, a source FieldBundle and a destination FieldBundle. Then we use `ESMF_FieldBundleRedist` to redistribute data from source FieldBundle to destination FieldBundle.

The same Grid is used where the source and destination packed FieldBundle are built upon. Source and destination Bundle have different memory layout.

```
allocate(srcfptr(3,5,10), dstfptr(10,5,3))
srcfptr = lpe
srcFieldBundle = ESMF_FieldBundleCreate((/'field01', 'field02', 'field03'/), &
  srcfptr, grid, 1, gridToFieldMap=(/2,3/), rc=rc)

dstFieldBundle = ESMF_FieldBundleCreate((/'field01', 'field02', 'field03'/), &
  dstfptr, grid, 3, gridToFieldMap=(/2,1/), rc=rc)

! perform redist
call ESMF_FieldBundleRedistStore(srcFieldBundle, dstFieldBundle, &
     routehandle, rc=rc)

call ESMF_FieldBundleRedist(srcFieldBundle, dstFieldBundle, &
     routehandle, rc=rc)
```

26.2.11 Perform sparse matrix multiplication from a source FieldBundle to a destination FieldBundle

The `ESMF_FieldBundleSMM` interface can be used to perform SMM from source FieldBundle to destination FieldBundle. This interface is overloaded by type and kind;

In this example, we first create two FieldBundles, a source FieldBundle and a destination FieldBundle. Then we use `ESMF_FieldBundleSMM` to perform sparse matrix multiplication from source FieldBundle to destination FieldBundle.

The operation performed in this example is better illustrated in section 27.3.33.

Section 29.2.18 provides a detailed discussion of the sparse matrix multiplication operation implemented in ESMF.

```
call ESMF_VMGetCurrent(vm, rc=rc)
```

```
call ESMF_VMGet(vm, localPet=lpe, rc=rc)

! create distgrid and grid
distgrid = ESMF_DistGridCreate(minIndex=(/1/), maxIndex=(/16/), &
    regDecomp=(/4/), &
    rc=rc)

grid = ESMF_GridCreate(distgrid=distgrid, &
    gridEdgeLWidth=(/0/), gridEdgeUWidth=(/0/), &
    name="grid", rc=rc)

call ESMF_ArraySpecSet(arrayspec, 1, ESMF_TYPEKIND_I4, rc=rc)

! create field bundles and fields
srcFieldBundle = ESMF_FieldBundleCreate(rc=rc)

dstFieldBundle = ESMF_FieldBundleCreate(rc=rc)

do i = 1, 3
    srcField(i) = ESMF_FieldCreate(grid, arrayspec, &
        totalLWidth=(/1/), totalUWidth=(/2/), &
        rc=rc)

    call ESMF_FieldGet(srcField(i), localDe=0, farrayPtr=srcfptr, rc=rc)

    srcfptr = 1

    call ESMF_FieldBundleAdd(srcFieldBundle, (/srcField(i)/), rc=rc)

    dstField(i) = ESMF_FieldCreate(grid, arrayspec, &
        totalLWidth=(/1/), totalUWidth=(/2/), &
        rc=rc)

    call ESMF_FieldGet(dstField(i), localDe=0, farrayPtr=dstfptr, rc=rc)

    dstfptr = 0

    call ESMF_FieldBundleAdd(dstFieldBundle, (/dstField(i)/), rc=rc)

enddo

! initialize factorList and factorIndexList
allocate(factorList(4))
allocate(factorIndexList(2,4))
factorList = (/1,2,3,4/)
factorIndexList(1,:) = (/lpe*4+1,lpe*4+2,lpe*4+3,lpe*4+4/)
factorIndexList(2,:) = (/lpe*4+1,lpe*4+2,lpe*4+3,lpe*4+4/)
call ESMF_FieldBundleSMMStore(srcFieldBundle, dstFieldBundle, &
    routehandle, factorList, factorIndexList, rc=rc)
```

```
! perform smm
call ESMF_FieldBundleSMM(srcFieldBundle, dstFieldBundle, routehandle, &
      rc=rc)

! release SMM route handle
call ESMF_FieldBundleSMMRelease(routehandle, rc=rc)
```

26.2.12 Perform FieldBundle halo update

`ESMF_FieldBundleHalo` interface can be used to perform halo updates for all the Fields contained in the `ESMF_FieldBundle`.

In this example, we will set up a FieldBundle for a 2D inviscid and compressible flow problem. We will illustrate the FieldBundle halo update operation but we will not solve the non-linear PDEs. The emphasis here is to demonstrate how to set up halo regions, how a numerical scheme updates the exclusive regions, and how a halo update communicates data in the halo regions. Here are the governing equations:

$u_t + uu_x + vu_y + \frac{1}{\rho}p_x = 0$ (conservation of momentum in x-direction)

$v_t + uv_x + vv_y + \frac{1}{\rho}p_y = 0$ (conservation of momentum in y-direction)

$\rho_t + \rho u_x + \rho v_y = 0$ (conservation of mass)

$\frac{\rho}{\rho^\gamma} + u(\frac{p}{\rho^\gamma})_x + v(\frac{p}{\rho^\gamma})_y = 0$ (conservation of energy)

The four unknowns are pressure p, density ρ, velocity (u, v). The grids are set up using Arakawa D stagger (p on corner, ρ at center, u and v on edges). p, ρ, u, and v are bounded by necessary boundary conditions and initial conditions.

Section 29.2.15 provides a detailed discussion of the halo operation implemented in ESMF.

```
! create distgrid and grid according to the following decomposition
! and stagger pattern, r is density.
!
! p--------u-------+p+-------u--------p
! !                 |                 |
! !                 |                 |
! !                 |                 |
! v        r        v        r        v
! !      PET 0      |      PET 1      |
! !                 |                 |
! !                 |                 |
! p--------u-------+p+-------u--------p
! !                 |                 |
! !                 |                 |
! !                 |                 |
! v        r        v        r        v
! !      PET 2      |      PET 3      |
! !                 |                 |
! !                 |                 |
! p--------u-------+p+-------u--------p
!
distgrid = ESMF_DistGridCreate(minIndex=(/1,1/), maxIndex=(/256,256/), &
    regDecomp=(/2,2/), &
    rc=rc)
```

```
grid = ESMF_GridCreate(distgrid=distgrid, name="grid", rc=rc)

call ESMF_ArraySpecSet(arrayspec, 2, ESMF_TYPEKIND_R4, rc=rc)

! create field bundles and fields
fieldBundle = ESMF_FieldBundleCreate(rc=rc)

! set up exclusive/total region for the fields
!
! halo: L/U, nDim, nField, nPet
! halo configuration for pressure, and similarly for density, u, and v
halo(1,1,1,1) = 0
halo(2,1,1,1) = 0
halo(1,2,1,1) = 0
halo(2,2,1,1) = 0
halo(1,1,1,2) = 1   ! halo in x direction on left hand side of pet 1
halo(2,1,1,2) = 0
halo(1,2,1,2) = 0
halo(2,2,1,2) = 0
halo(1,1,1,3) = 0
halo(2,1,1,3) = 1   ! halo in y direction on upper side of pet 2
halo(1,2,1,3) = 0
halo(2,2,1,3) = 0
halo(1,1,1,4) = 1   ! halo in x direction on left hand side of pet 3
halo(2,1,1,4) = 1   ! halo in y direction on upper side of pet 3
halo(1,2,1,4) = 0
halo(2,2,1,4) = 0

! names and staggers of the 4 unknown fields
names(1) = "pressure"
names(2) = "density"
names(3) = "u"
names(4) = "v"
staggers(1) = ESMF_STAGGERLOC_CORNER
staggers(2) = ESMF_STAGGERLOC_CENTER
staggers(3) = ESMF_STAGGERLOC_EDGE2
staggers(4) = ESMF_STAGGERLOC_EDGE1

! create a FieldBundle
lpe = lpe + 1
do i = 1, 4
    field(i) = ESMF_FieldCreate(grid, arrayspec, &
            totalLWidth=(/halo(1,1,i,lpe), halo(1,2,i,lpe)/), &
            totalUWidth=(/halo(2,1,i,lpe), halo(2,2,i,lpe)/), &
            staggerloc=staggers(i), name=names(i), &
            rc=rc)

    call ESMF_FieldBundleAdd(fieldBundle, (/field(i)/), rc=rc)

enddo

! compute the routehandle
call ESMF_FieldBundleHaloStore(fieldBundle, routehandle=routehandle, &
                               rc=rc)
```

```
do iter = 1, 10
    do i = 1, 4
        call ESMF_FieldGet(field(i), farrayPtr=fptr, &
            exclusiveLBound=excllb, exclusiveUBound=exclub, rc=rc)

        sizes = exclub - excllb
        ! fill the total region with 0.
        fptr = 0.
        ! only update the exclusive region on local PET
        do j = excllb(1), exclub(1)
          do k = excllb(2), exclub(2)
            fptr(j,k) = iter * cos(2.*PI*j/sizes(1))*sin(2.*PI*k/sizes(2))
          enddo
        enddo
    enddo
    ! call halo execution to update the data in the halo region,
    ! it can be verified that the halo regions change from 0.
    ! to non zero values.
    call ESMF_FieldBundleHalo(fieldbundle, routehandle=routehandle, rc=rc)

enddo
! release halo route handle
call ESMF_FieldBundleHaloRelease(routehandle, rc=rc)
```

26.3 Restrictions and Future Work

1. **No enforcement of the *same* Grid, Mesh, LocStream, or XGrid restriction.** While the documentation indicates in several places (including the Design and Implementation Notes) that a FieldBundle can only contain Fields that are built on the same Grid, Mesh, LocStream, or XGrid, and all Fields must have the same distribution, the actual FieldBundle implementation is more general and supports bundling of any Fields. The documentation, however, is in line with the long term plan of making the restrictive FieldBundle definition the default behavior. The more general bundling option would then be retained as a special case that requires explicit specification by the user. There is currently no functional difference in the FieldBundle implementation that profits from the documented restrictive approach. In addition, the general bundling option has been supported for a long time. Note however that the documented restrictive behavior is the anticipated long term default for FieldBundles.

2. **No mathematical operators.** The FieldBundle class does not support differential or other mathematical operators. We do not anticipate providing this functionality in the near future.

3. **Limited validation and print options.** We are planning to increase the number of validity checks available for FieldBundles as soon as possible. We also will be working on print options.

4. **Packed data has limited supported.** One of the options that we are currently working on for FieldBundles is packing. Packing means that the data from all the Fields that comprise the FieldBundle are manipulated collectively. This operation can be done without destroying the original Field data. Packing is being designed to facilitate optimized regridding, data communication, and I/O operations. This will reduce the latency overhead of the communication.

   CAUTION: For communication methods, the undistributed dimension representing the number of fields must have identical size between source and destination packed data. Communication methods do not permute the order of fields in the source and destination packed FieldBundle.

5. **Interleaving Fields within a FieldBundle.** Data locality is important for performance on some computing platforms. An interleave option will be added to allow the user to create a packed FieldBundle in which Fields are either concatenated in memory or in which Field elements are interleaved.

26.4 Design and Implementation Notes

1. **Fields in a FieldBundle reference the same Grid, Mesh, LocStream, or XGrid.** In order to reduce memory requirements and ensure consistency, the Fields within a FieldBundle all reference the same Grid, Mesh, LocStream, or XGrid object. This restriction may be relaxed in the future.

26.5 Class API: Basic FieldBundle Methods

26.5.1 ESMF_FieldBundleAssignment(=) - FieldBundle assignment

INTERFACE:

```
interface assignment(=)
fieldbundle1 = fieldbundle2
```

ARGUMENTS:

```
type(ESMF_FieldBundle) :: fieldbundle1
type(ESMF_FieldBundle) :: fieldbundle2
```

STATUS:

- This interface is backward compatible with ESMF versions starting at 5.2.0r. If code using this interface compiles with any version of ESMF starting with 5.2.0r, then it will compile with the current version.

DESCRIPTION:

Assign fieldbundle1 as an alias to the same ESMF fieldbundle object in memory as fieldbundle2. If fieldbundle2 is invalid, then fieldbundle1 will be equally invalid after the assignment.

The arguments are:

fieldbundle1 The `ESMF_FieldBundle` object on the left hand side of the assignment.

fieldbundle2 The `ESMF_FieldBundle` object on the right hand side of the assignment.

26.5.2 ESMF_FieldBundleOperator(==) - FieldBundle equality operator

INTERFACE:

```
interface operator(==)
if (fieldbundle1 == fieldbundle2) then ... endif
OR
result = (fieldbundle1 == fieldbundle2)
```

RETURN VALUE:

```
logical :: result
```

ARGUMENTS:

```
type(ESMF_FieldBundle), intent(in) :: fieldbundle1
type(ESMF_FieldBundle), intent(in) :: fieldbundle2
```

STATUS:

- This interface is backward compatible with ESMF versions starting at 5.2.0r. If code using this interface compiles with any version of ESMF starting with 5.2.0r, then it will compile with the current version.

DESCRIPTION:

Test whether fieldbundle1 and fieldbundle2 are valid aliases to the same ESMF fieldbundle object in memory. For a more general comparison of two ESMF FieldBundles, going beyond the simple alias test, the ESMF_FieldBundleMatch() function (not yet implemented) must be used.

The arguments are:

fieldbundle1 The `ESMF_FieldBundle` object on the left hand side of the equality operation.

fieldbundle2 The `ESMF_FieldBundle` object on the right hand side of the equality operation.

26.5.3 ESMF_FieldBundleOperator(/=) - FieldBundle not equal operator

INTERFACE:

```
interface operator(/=)
if (fieldbundle1 /= fieldbundle2) then ... endif
OR
result = (fieldbundle1 /= fieldbundle2)
```

RETURN VALUE:

```
logical :: result
```

ARGUMENTS:

```
type(ESMF_FieldBundle), intent(in) :: fieldbundle1
type(ESMF_FieldBundle), intent(in) :: fieldbundle2
```

STATUS:

- This interface is backward compatible with ESMF versions starting at 5.2.0r. If code using this interface compiles with any version of ESMF starting with 5.2.0r, then it will compile with the current version.

DESCRIPTION:

Test whether fieldbundle1 and fieldbundle2 are *not* valid aliases to the same ESMF fieldbundle object in memory. For a more general comparison of two ESMF FieldBundles, going beyond the simple alias test, the ESMF_FieldBundleMatch() function (not yet implemented) must be used.

The arguments are:

fieldbundle1 The `ESMF_FieldBundle` object on the left hand side of the non-equality operation.

fieldbundle2 The `ESMF_FieldBundle` object on the right hand side of the non-equality operation.

26.5.4 ESMF_FieldBundleAdd - Add Fields to a FieldBundle

INTERFACE:

```
! Private name; call using ESMF_FieldBundleAdd()
subroutine ESMF_FieldBundleAddList(fieldbundle, fieldList, &
  multiflag, relaxedflag, rc)
```

ARGUMENTS:

```
 type(ESMF_FieldBundle), intent(inout) :: fieldbundle
 type(ESMF_Field), intent(in) :: fieldList(:)
-- The following arguments require argument keyword syntax (e.g. rc=rc). --
 logical, intent(in), optional :: multiflag
 logical, intent(in), optional :: relaxedflag
 integer, intent(out), optional :: rc
```

STATUS:

- This interface is backward compatible with ESMF versions starting at 5.2.0r. If code using this interface compiles with any version of ESMF starting with 5.2.0r, then it will compile with the current version.

DESCRIPTION:

Add Field(s) to a FieldBundle. It is an error if `fieldList` contains Fields that match by name Fields already contained in `fieldbundle` when multiflag is set to `.false.` and relaxedflag is set to `.false.`.

fieldbundle `ESMF_FieldBundle` to be added to.

fieldList List of `ESMF_Field` objects to be added.

[multiflag] A setting of `.true.` allows multiple items with the same name to be added to `ESMF_FieldBundle`. For `.false.` added items must have unique names. The default setting is `.false.`.

[relaxedflag] A setting of `.true.` indicates a relaxed definition of "add" under `multiflag=.false.` mode, where it is *not* an error if `fieldList` contains items with names that are also found in `ESMF_FieldBundle`. The `ESMF_FieldBundle` is left unchanged for these items. For `.false.` this is treated as an error condition. The default setting is `.false.`.

[rc] Return code; equals `ESMF_SUCCESS` if there are no errors.

26.5.5 ESMF_FieldBundleAddReplace - Conditionally add or replace Fields in a FieldBundle

INTERFACE:

```
     subroutine ESMF_FieldBundleAddReplace(fieldbundle, fieldList, rc)
```

ARGUMENTS:

```
     type(ESMF_FieldBundle), intent(inout) :: fieldbundle
     type(ESMF_Field), intent(in) :: fieldList(:)
 -- The following arguments require argument keyword syntax (e.g. rc=rc). --
     integer, intent(out), optional :: rc
```

STATUS:

- This interface is backward compatible with ESMF versions starting at 5.2.0r. If code using this interface compiles with any version of ESMF starting with 5.2.0r, then it will compile with the current version.

DESCRIPTION:

Fields in `fieldList` that do not match any Fields by name in `fieldbundle` are added to the FieldBundle. Fields in `fieldList` that match any Fields by name in `fieldbundle` replace those Fields.

fieldbundle `ESMF_FieldBundle` to be manipulated.

fieldList List of `ESMF_Field` objects to be added or used as replacement.

[rc] Return code; equals `ESMF_SUCCESS` if there are no errors.

26.5.6 ESMF_FieldBundleCreate - Create a non packed FieldBundle from a list of Fields

INTERFACE:

```
   ! Private name; call using ESMF_FieldBundleCreate()
   function ESMF_FieldBundleCreateDefault(fieldList, &
       multiflag, relaxedflag, name, rc)
```

RETURN VALUE:

```
type(ESMF_FieldBundle) :: ESMF_FieldBundleCreateDefault
```

ARGUMENTS:

```
-- The following arguments require argument keyword syntax (e.g. rc=rc). --
    type(ESMF_Field), intent(in), optional :: fieldList(:)
    logical, intent(in), optional :: multiflag
    logical, intent(in), optional :: relaxedflag
    character (len=*),intent(in), optional :: name
    integer, intent(out), optional :: rc
```

STATUS:

- This interface is backward compatible with ESMF versions starting at 5.2.0r. If code using this interface compiles with any version of ESMF starting with 5.2.0r, then it will compile with the current version.

DESCRIPTION:

Create an `ESMF_FieldBundle` object from a list of existing Fields.

The creation of a FieldBundle leaves the bundled Fields unchanged, they remain valid individual objects. a FieldBundle is a light weight container of Field references. The actual data remains in place, there are no data movements or duplications associated with the creation of an FieldBundle.

[fieldList] List of `ESMF_Field` objects to be bundled.

[multiflag] A setting of `.true.` allows multiple items with the same name to be added to `fieldbundle`. For `.false.` added items must have unique names. The default setting is `.false.`.

[relaxedflag] A setting of `.true.` indicates a relaxed definition of "add" under `multiflag=.false.` mode, where it is *not* an error if `fieldList` contains items with names that are also found in `fieldbundle`. The `fieldbundle` is left unchanged for these items. For `.false.` this is treated as an error condition. The default setting is `.false.`.

[name] Name of the created `ESMF_FieldBundle`. A default name is generated if not specified.

[rc] Return code; equals `ESMF_SUCCESS` if there are no errors.

26.5.7 ESMF_FieldBundleCreate - Create a packed FieldBundle from Fortran array pointer and Grid

INTERFACE:

```
! Private name; call using ESMF_FieldBundleCreate()
function ESMF_FieldBundleCreateGrid<rank><type><kind>(fieldNameList, &
farrayPtr, grid, fieldDim, &
indexflag, staggerLoc, &
gridToFieldMap, &
totalLWidth, totalUWidth, name, rc)
```

RETURN VALUE:

```
type(ESMF_FieldBundle) :: ESMF_FieldBundleCreateGridDataPtr<rank><type><kind>
```

ARGUMENTS:

```
  character(len=*), intent(in) :: fieldNameList(:)
  <type> (ESMF_KIND_<kind>), dimension(<rank>), pointer :: farrayPtr
  type(ESMF_Grid), intent(in) :: grid
  integer, intent(in) :: fieldDim
-- The following arguments require argument keyword syntax (e.g. rc=rc). --
  type(ESMF_Index_Flag), intent(in), optional :: indexflag
  type(ESMF_StaggerLoc), intent(in), optional :: staggerloc
  integer, intent(in), optional :: gridToFieldMap(:)
  integer, intent(in), optional :: totalLWidth(:)
  integer, intent(in), optional :: totalUWidth(:)
  integer, intent(in), optional :: name
  integer, intent(out), optional :: rc
```

DESCRIPTION:

Create a packed FieldBundle from user supplied list of field names, pre-allocated Fortran array pointer, and `ESMF_Grid` object.

The arguments are:

fieldNameList A list of field names for the Fields held by the packed `FieldBundle`.

farrayPtr Pre-allocated Fortran array pointer holding the memory of the list of Fields.

grid The `ESMF_Grid` object on which the Fields in the packed FieldBundle are built.

fieldDim The dimension in the `farrayPtr` that contains the indices of Fields to be packed.

[indexflag] Indicate how DE-local indices are defined. See section 55.29 for a list of valid indexflag options. All Fields in packed FieldBundle use identical indexflag setting.

[staggerloc] Stagger location of data in grid cells. For valid predefined values see section 32.2.6. To create a custom stagger location see section 32.3.25. The default value is `ESMF_STAGGERLOC_CENTER`. All Fields in packed FieldBundle use identical staggerloc setting.

[gridToFieldMap] List with number of elements equal to the `grid`'s dimCount. The list elements map each dimension of the `grid` to a dimension in the `farrayPtr` by specifying the appropriate `farrayPtr` dimension index. The default is to map all of the `grid`'s dimensions against the lowest dimensions of the `farrayPtr` in sequence, i.e. `gridToFieldMap` = (/1,2,3,.../). The values of all `gridToFieldMap` entries must be greater than or equal to one and smaller than or equal to the `farrayPtr` rank. It is erroneous to specify the same `gridToFieldMap` entry multiple times. The total ungridded dimensions in the `field` are the total `farrayPtr` dimensions less the total (distributed + undistributed) dimensions in the `grid`. Ungridded dimensions must be in the same order they are stored in the farrayPtr. Permutations of the order of dimensions are handled via individual communication methods. For example, an undistributed dimension can be remapped to a distributed dimension as part of the `ESMF_ArrayRedist()` operation. All Fields in packed FieldBundle use identical gridToFieldMap setting.

[totalLWidth] Lower bound of halo region. The size of this array is the number of gridded dimensions in the Field. However, ordering of the elements needs to be the same as they appear in the `farrayPtr`. Values default to 0. If values for totalLWidth are specified they must be reflected in the size of the `farrayPtr`. That is, for each gridded dimension the `farrayPtr` size should be max(`totalLWidth` + `totalUWidth` + `computationalCount`, `exclusiveCount`). All Fields in packed FieldBundle use identical totalLWidth setting.

[totalUWidth] Upper bound of halo region. The size of this array is the number of gridded dimensions in the Field. However, ordering of the elements needs to be the same as they appear in the `farrayPtr`. Values default to 0. If values for totalUWidth are specified they must be reflected in the size of the `farrayPtr`. That is, for each gridded dimension the `farrayPtr` size should max(`totalLWidth` + `totalUWidth` + `computationalCount`, `exclusiveCount`). All Fields in packed FieldBundle use identical totalUWidth setting.

[name] FieldBundle name.

[rc] Return code; equals `ESMF_SUCCESS` if there are no errors.

26.5.8 ESMF_FieldBundleCreate - Create a packed FieldBundle from Fortran array pointer and Mesh

INTERFACE:

```
! Private name; call using ESMF_FieldBundleCreate()
function ESMF_FieldBundleCreateMesh<rank><type><kind>(fieldNameList, &
farrayPtr, Mesh, fieldDim, &
meshLoc, gridToFieldMap, name, rc)
```

RETURN VALUE:

```
type(ESMF_FieldBundle) :: ESMF_FieldBundleCreateMeshDataPtr<rank><type><kind>
```

ARGUMENTS:

```
  character(len=*), intent(in) :: fieldNameList(:)
  <type> (ESMF_KIND_<kind>), dimension(<rank>), pointer :: farrayPtr
  type(ESMF_Mesh), intent(in) :: mesh
  integer, intent(in) :: fieldDim
-- The following arguments require argument keyword syntax (e.g. rc=rc). --
  type(ESMF_MeshLoc), intent(in), optional:: meshloc
  integer, intent(in), optional :: gridToFieldMap(:)
  integer, intent(in), optional :: name
  integer, intent(out), optional :: rc
```

DESCRIPTION:

Create a packed FieldBundle from user supplied list of field names, pre-allocated Fortran array pointer, and `ESMF_Mesh` object.

The arguments are:

fieldNameList A list of field names for the Fields held by the packed `FieldBundle`.

farrayPtr Pre-allocated Fortran array pointer holding the memory of the list of Fields.

mesh The `ESMF_Mesh` object on which the Fields in the packed FieldBundle are built.

fieldDim The dimension in the `farrayPtr` that contains the indices of Fields to be packed.

[meshloc] The part of the Mesh on which to build the Field. For valid predefined values see Section 55.41. If not set, defaults to `ESMF_MESHLOC_NODE`.

[gridToFieldMap] List with number of elements equal to the `mesh`'s dimCount. The list elements map each dimension of the `mesh` to a dimension in the `farrayPtr` by specifying the appropriate `farrayPtr` dimension index. The default is to map all of the `mesh`'s dimensions against the lowest dimensions of the `farrayPtr` in sequence, i.e. `gridToFieldMap` = (/1,2,3,.../). The values of all `gridToFieldMap` entries must be greater than or equal to one and smaller than or equal to the `farrayPtr` rank. It is erroneous to specify the same `gridToFieldMap` entry multiple times. The total ungridded dimensions in the `field` are the total `farrayPtr` dimensions less the total (distributed + undistributed) dimensions in the `mesh`. Ungridded dimensions must be in the same order they are stored in the farrayPtr. Permutations of the order of dimensions are handled via individual communication methods. For example, an undistributed dimension can be remapped to a distributed dimension as part of the `ESMF_ArrayRedist()` operation. All Fields in packed FieldBundle use identical gridToFieldMap setting.

[name] FieldBundle name.

[rc] Return code; equals `ESMF_SUCCESS` if there are no errors.

26.5.9 ESMF_FieldBundleDestroy - Release resources associated with a FieldBundle

INTERFACE:

```
subroutine ESMF_FieldBundleDestroy(fieldbundle, noGarbage, rc)
```

ARGUMENTS:

```
     type(ESMF_FieldBundle), intent(inout) :: fieldbundle
 -- The following arguments require argument keyword syntax (e.g. rc=rc). --
     logical, intent(in), optional :: noGarbage
     integer, intent(out), optional :: rc
```

STATUS:

- This interface is backward compatible with ESMF versions starting at 5.2.0r. If code using this interface compiles with any version of ESMF starting with 5.2.0r, then it will compile with the current version.
- This interface was modified since ESMF version 5.2.0r. The fact that code using this interface compiles with the current ESMF version does not guarantee that it compiles with previous versions of this interface. If user code compatibility with version 5.2.0r is desired then care must be taken to limit the use of this interface to features that were available in the 5.2.0r release.
  Changes made after the 5.2.0r release:

  7.0.0 Added argument `noGarbage`. The argument provides a mechanism to override the default garbage collection mechanism when destroying an ESMF object.

DESCRIPTION:

Destroy an `ESMF_FieldBundle` object. The member Fields are not touched by this operation and remain valid objects that need to be destroyed individually if necessary.

The arguments are:

fieldbundle `ESMF_FieldBundle` object to be destroyed.

[noGarbage] If set to `.TRUE.` the object will be fully destroyed and removed from the ESMF garbage collection system. Note however that under this condition ESMF cannot protect against accessing the destroyed object through dangling aliases – a situation which may lead to hard to debug application crashes.

It is generally recommended to leave the `noGarbage` argument set to `.FALSE.` (the default), and to take advantage of the ESMF garbage collection system which will prevent problems with dangling aliases or incorrect sequences of destroy calls. However this level of support requires that a small remnant of the object is kept in memory past the destroy call. This can lead to an unexpected increase in memory consumption over the course of execution in applications that use temporary ESMF objects. For situations where the repeated creation and destruction of temporary objects leads to memory issues, it is recommended to call with `noGarbage` set to `.TRUE.`, fully removing the entire temporary object from memory.

[rc] Return code; equals `ESMF_SUCCESS` if there are no errors.

26.5.10 ESMF_FieldBundleGet - Get object-wide information from a FieldBundle

INTERFACE:

```
! Private name; call using ESMF_FieldBundleGet()
subroutine ESMF_FieldBundleGetListAll(fieldbundle, &
  itemorderflag, geomtype, geom, grid, locstream, mesh, xgrid, &
  fieldCount, fieldList, fieldNameList, isPacked, name, vm, rc)
```

ARGUMENTS:

```
    type(ESMF_FieldBundle), intent(in) :: fieldbundle
-- The following arguments require argument keyword syntax (e.g. rc=rc). --
    type(ESMF_ItemOrder_Flag), intent(in), optional :: itemorderflag
    type(ESMF_GeomType_Flag), intent(out), optional :: geomtype
    type(ESMF_Geom), intent(out), optional :: geom
    type(ESMF_Grid), intent(out), optional :: grid
    type(ESMF_LocStream), intent(out), optional :: locstream
    type(ESMF_Mesh), intent(out), optional :: mesh
    type(ESMF_XGrid), intent(out), optional :: xgrid
    integer, intent(out), optional :: fieldCount
    type(ESMF_Field), intent(out), optional :: fieldList(:)
    character(len=*), intent(out), optional :: fieldNameList(:)
    logical, intent(out), optional :: isPacked
    character(len=*), intent(out), optional :: name
    type(ESMF_VM), intent(out), optional :: vm
    integer, intent(out), optional :: rc
```

STATUS:

- This interface is backward compatible with ESMF versions starting at 5.2.0r. If code using this interface compiles with any version of ESMF starting with 5.2.0r, then it will compile with the current version.
- This interface was modified since ESMF version 5.2.0r. The fact that code using this interface compiles with the current ESMF version does not guarantee that it compiles with previous versions of this interface. If user code compatibility with version 5.2.0r is desired then care must be taken to limit the use of this interface to features that were available in the 5.2.0r release.
  Changes made after the 5.2.0r release:

  6.1.0 Added argument `itemorderflag`. The new argument gives the user control over the order in which the items are returned.

  8.0.0 Added argument `isPacked`. The new argument allows the user to query if this is a packed FieldBundle.

  8.8.0 Added argument `vm` in order to offer information about the VM on which the FieldBundle was created.

  8.9.0 Added argument `geom` to allow the user to retrieve a generic representation of the geometry of the FieldBundle.

DESCRIPTION:

Get the list of all Fields and field names bundled in a FieldBundle.

fieldbundle `ESMF_FieldBundle` to be queried.

[itemorderflag] Specifies the order of the returned items in the `fieldList` or the `fieldNameList`. The default is `ESMF_ITEMORDER_ABC`. See 55.34 for a full list of options.

[geomtype] Flag that indicates what type of geometry this FieldBundle object holds. Can be `ESMF_GEOMTYPE_GRID`, `ESMF_GEOMTYPE_MESH`, `ESMF_GEOMTYPE_LOCSTREAM`, `ESMF_GEOMTYPE_XGRID`

[geom] The Geom object that this FieldBundle object holds.

[grid] The Grid object that this FieldBundle object holds.

[locstream] The LocStream object that this FieldBundle object holds.

[mesh] The Mesh object that this FieldBundle object holds.

[xgrid] The XGrid object that this FieldBundle object holds.

[fieldCount] Upon return holds the number of Fields bundled in the fieldbundle.

[fieldList] Upon return holds a list of Fields bundled in `ESMF_FieldBundle`. The argument must be allocated to be at least of size `fieldCount`.

[fieldNameList] Upon return holds a list of the names of the fields bundled in `ESMF_FieldBundle`. The argument must be allocated to be at least of size `fieldCount`.

[isPacked] Upon return holds the information if this FieldBundle is packed.

[name] Name of the FieldBundle object.

[vm The VM on which the FieldBundle object was created.

[rc] Return code; equals `ESMF_SUCCESS` if there are no errors.

26.5.11 ESMF_FieldBundleGet - Get information about a Field by name and optionally return a Field

INTERFACE:

```
! Private name; call using ESMF_FieldBundleGet()
subroutine ESMF_FieldBundleGetItem(fieldbundle, fieldName, &
  field, fieldCount, isPresent, rc)
```

ARGUMENTS:

```
 type(ESMF_FieldBundle), intent(in) :: fieldbundle
 character(len=*), intent(in) :: fieldName
-- The following arguments require argument keyword syntax (e.g. rc=rc). --
 type(ESMF_Field), intent(out), optional :: field
 integer, intent(out), optional :: fieldCount
 logical, intent(out), optional :: isPresent
 integer, intent(out), optional :: rc
```

STATUS:

- This interface is backward compatible with ESMF versions starting at 5.2.0r. If code using this interface compiles with any version of ESMF starting with 5.2.0r, then it will compile with the current version.

DESCRIPTION:

Get information about items that match `fieldName` in FieldBundle.

fieldbundle `ESMF_FieldBundle` to be queried.

fieldName Specified name.

[field] Upon return holds the requested field item. It is an error if this argument was specified and there is not exactly one field item in `ESMF_FieldBundle` that matches `fieldName`.

[fieldCount] Number of Fields with `fieldName` in `ESMF_FieldBundle`.

[isPresent] Upon return indicates whether field(s) with `fieldName` exist in `ESMF_FieldBundle`.

[rc] Return code; equals `ESMF_SUCCESS` if there are no errors.

26.5.12 ESMF_FieldBundleGet - Get a list of Fields by name

INTERFACE:

```
! Private name; call using ESMF_FieldBundleGet()
subroutine ESMF_FieldBundleGetList(fieldbundle, fieldName, fieldList, &
  itemorderflag, rc)
```

ARGUMENTS:

```
     type(ESMF_FieldBundle), intent(in) :: fieldbundle
     character(len=*), intent(in) :: fieldName
     type(ESMF_Field), intent(out) :: fieldList(:)
 -- The following arguments require argument keyword syntax (e.g. rc=rc). --
     type(ESMF_ItemOrder_Flag), intent(in), optional :: itemorderflag
     integer, intent(out), optional :: rc
```

STATUS:

- This interface is backward compatible with ESMF versions starting at 5.2.0r. If code using this interface compiles with any version of ESMF starting with 5.2.0r, then it will compile with the current version.
- This interface was modified since ESMF version 5.2.0r. The fact that code using this interface compiles with the current ESMF version does not guarantee that it compiles with previous versions of this interface. If user code compatibility with version 5.2.0r is desired then care must be taken to limit the use of this interface to features that were available in the 5.2.0r release.
  Changes made after the 5.2.0r release:

  6.1.0 Added argument `itemorderflag`. The new argument gives the user control over the order in which the items are returned.

DESCRIPTION:

Get the list of Fields from fieldbundle that match fieldName.

fieldbundle `ESMF_FieldBundle` to be queried.

fieldName Specified name.

fieldList List of Fields in `ESMF_FieldBundle` that match `fieldName`. The argument must be allocated to be at least of size `fieldCount` returned for this `fieldName`.

[itemorderflag] Specifies the order of the returned items in the `fieldList`. The default is `ESMF_ITEMORDER_ABC`. See 55.34 for a full list of options.

[rc] Return code; equals `ESMF_SUCCESS` if there are no errors.

26.5.13 ESMF_FieldBundleGet - Get Fortran array pointer from a packed FieldBundle

INTERFACE:

```
! Private name; call using ESMF_FieldBundleGet()
function ESMF_FieldBundleGetDataPtr<rank><type><kind>(fieldBundle, &
localDe, farrayPtr, &
rc)
```

RETURN VALUE:

```
type(ESMF_FieldBundle) :: ESMF_FieldBundleGetDataPtr<rank><type><kind>
```

ARGUMENTS:

```
  type(ESMF_FieldBundle), intent(in) :: fieldBundle
  integer, intent(in), optional :: localDe
  <type> (ESMF_KIND_<kind>), dimension(<rank>), pointer :: farrayPtr
-- The following arguments require argument keyword syntax (e.g. rc=rc). --
  integer, intent(out), optional :: rc
```

DESCRIPTION:

Get a Fortran pointer to DE-local memory allocation within packed FieldBundle. It's erroneous to perform this call on a FieldBundle that's not packed.

The arguments are:

fieldBundle `ESMF_FieldBundle` object.

[localDe] Local DE for which information is requested. [0,..,localDeCount-1]. For localDeCount==1 the localDe argument may be omitted, in which case it will default to localDe=0. In the case where packed FieldBundle is created on a Grid, the number of localDes can be queried from the Grid attached to the FieldBundle. In the case where packed FieldBundle is created on a Mesh, the number of localDes is 1.

farrayPtr Fortran array pointer which will be pointed at DE-local memory allocation in packed FieldBundle.

[rc] Return code; equals `ESMF_SUCCESS` if there are no errors.

26.5.14 ESMF_FieldBundleHalo - Execute a FieldBundle halo operation

INTERFACE:

```
subroutine ESMF_FieldBundleHalo(fieldbundle, routehandle, &
  checkflag, rc)
```

ARGUMENTS:

```
        type(ESMF_FieldBundle), intent(inout) :: fieldbundle
        type(ESMF_RouteHandle), intent(inout) :: routehandle
-- The following arguments require argument keyword syntax (e.g. rc=rc). --
        logical, intent(in), optional :: checkflag
        integer, intent(out), optional :: rc
```

STATUS:

- This interface is backward compatible with ESMF versions starting at 5.2.0r. If code using this interface compiles with any version of ESMF starting with 5.2.0r, then it will compile with the current version.

DESCRIPTION:

Execute a precomputed halo operation for the Fields in `fieldbundle`. The FieldBundle must match the respective FieldBundle used during `ESMF_FieldBundleHaloStore()` in *type*, *kind*, and memory layout of the *gridded* dimensions. However, the size, number, and index order of *ungridded* dimensions may be different. See section 38.2.5 for a more detailed discussion of RouteHandle reusability.

See `ESMF_FieldBundleHaloStore()` on how to precompute `routehandle`.

fieldbundle `ESMF_FieldBundle` with source data. The data in this FieldBundle may be destroyed by this call.

routehandle Handle to the precomputed Route.

[checkflag] If set to `.TRUE.` the input FieldBundle pair will be checked for consistency with the precomputed operation provided by `routehandle`. If set to `.FALSE.` *(default)* only a very basic input check will be performed, leaving many inconsistencies undetected. Set `checkflag` to `.FALSE.` to achieve highest performance.

[rc] Return code; equals `ESMF_SUCCESS` if there are no errors.

26.5.15 ESMF_FieldBundleHaloRelease - Release resources associated with a FieldBundle halo operation

INTERFACE:

```
subroutine ESMF_FieldBundleHaloRelease(routehandle, &
  noGarbage, rc)
```

ARGUMENTS:

```
        type(ESMF_RouteHandle), intent(inout) :: routehandle
-- The following arguments require argument keyword syntax (e.g. rc=rc). --
        logical, intent(in), optional :: noGarbage
        integer, intent(out), optional :: rc
```

STATUS:

- This interface is backward compatible with ESMF versions starting at 5.2.0r. If code using this interface compiles with any version of ESMF starting with 5.2.0r, then it will compile with the current version.
- This interface was modified since ESMF version 5.2.0r. The fact that code using this interface compiles with the current ESMF version does not guarantee that it compiles with previous versions of this interface. If user code compatibility with version 5.2.0r is desired then care must be taken to limit the use of this interface to features that were available in the 5.2.0r release.
  Changes made after the 5.2.0r release:

  8.0.0 Added argument `noGarbage`. The argument provides a mechanism to override the default garbage collection mechanism when destroying an ESMF object.

DESCRIPTION:

Release resources associated with a FieldBundle halo operation. After this call `routehandle` becomes invalid.

routehandle Handle to the precomputed Route.

[noGarbage] If set to `.TRUE.` the object will be fully destroyed and removed from the ESMF garbage collection system. Note however that under this condition ESMF cannot protect against accessing the destroyed object through dangling aliases – a situation which may lead to hard to debug application crashes.

It is generally recommended to leave the `noGarbage` argument set to `.FALSE.` (the default), and to take advantage of the ESMF garbage collection system which will prevent problems with dangling aliases or incorrect sequences of destroy calls. However this level of support requires that a small remnant of the object is kept in memory past the destroy call. This can lead to an unexpected increase in memory consumption over the course of execution in applications that use temporary ESMF objects. For situations where the repeated creation and destruction of temporary objects leads to memory issues, it is recommended to call with `noGarbage` set to `.TRUE.`, fully removing the entire temporary object from memory.

[rc] Return code; equals `ESMF_SUCCESS` if there are no errors.

26.5.16 ESMF_FieldBundleHaloStore - Precompute a FieldBundle halo operation

INTERFACE:

```
     subroutine ESMF_FieldBundleHaloStore(fieldbundle, routehandle, &
       rc)
```

ARGUMENTS:

```
     type(ESMF_FieldBundle), intent(inout) :: fieldbundle
     type(ESMF_RouteHandle), intent(inout) :: routehandle
 -- The following arguments require argument keyword syntax (e.g. rc=rc). --
     integer, intent(out), optional :: rc
```

STATUS:

- This interface is backward compatible with ESMF versions starting at 5.2.0r. If code using this interface compiles with any version of ESMF starting with 5.2.0r, then it will compile with the current version.

DESCRIPTION:

Store a FieldBundle halo operation over the data in `fieldbundle`. By definition, all elements in the total Field regions that lie outside the exclusive regions will be considered potential destination elements for the halo operation. However, only those elements that have a corresponding halo source element, i.e. an exclusive element on one of the DEs, will be updated under the halo operation. Elements that have no associated source remain unchanged under halo.

The routine returns an `ESMF_RouteHandle` that can be used to call `ESMF_FieldBundleHalo()` on any pair of FieldBundles that matches `srcFieldBundle` and `dstFieldBundle` in *type*, *kind*, and memory layout of the *gridded* dimensions. However, the size, number, and index order of *ungridded* dimensions may be different. See section 38.2.5 for a more detailed discussion of RouteHandle reusability.

This call is *collective* across the current VM.

fieldbundle `ESMF_FieldBundle` containing data to be haloed. The data in this FieldBundle may be destroyed by this call.

routehandle Handle to the precomputed Route.

[rc] Return code; equals `ESMF_SUCCESS` if there are no errors.

26.5.17 ESMF_FieldBundleIsCreated - Check whether a FieldBundle object has been created

INTERFACE:

```
function ESMF_FieldBundleIsCreated(fieldbundle, rc)
```

RETURN VALUE:

```
logical :: ESMF_FieldBundleIsCreated
```

ARGUMENTS:

```
     type(ESMF_FieldBundle), intent(in) :: fieldbundle
 -- The following arguments require argument keyword syntax (e.g. rc=rc). --
     integer, intent(out), optional :: rc
```

DESCRIPTION:

Return `.true.` if the `fieldbundle` has been created. Otherwise return `.false.`. If an error occurs, i.e. `rc /= ESMF_SUCCESS` is returned, the return value of the function will also be `.false.`.

The arguments are:

fieldbundle `ESMF_FieldBundle` queried.

[rc] Return code; equals `ESMF_SUCCESS` if there are no errors.

26.5.18 ESMF_FieldBundlePrint - Print FieldBundle information

INTERFACE:

```
subroutine ESMF_FieldBundlePrint(fieldbundle, rc)
```

ARGUMENTS:

```
     type(ESMF_FieldBundle), intent(in) :: fieldbundle
 -- The following arguments require argument keyword syntax (e.g. rc=rc). --
     integer, intent(out), optional :: rc
```

STATUS:

- This interface is backward compatible with ESMF versions starting at 5.2.0r. If code using this interface compiles with any version of ESMF starting with 5.2.0r, then it will compile with the current version.

DESCRIPTION:

Print internal information of the specified `fieldbundle` object.

The arguments are:

fieldbundle `ESMF_FieldBundle` object.

[rc] Return code; equals `ESMF_SUCCESS` if there are no errors.

26.5.19 ESMF_FieldBundleRead - Read Fields to a FieldBundle from file(s)

INTERFACE:

```
subroutine ESMF_FieldBundleRead(fieldbundle, fileName, &
  singleFile, timeslice, iofmt, rc)
```

ARGUMENTS:

```
  type(ESMF_FieldBundle), intent(inout) :: fieldbundle
  character(*), intent(in) :: fileName
-- The following arguments require argument keyword syntax (e.g. rc=rc). --
  logical, intent(in), optional :: singleFile
  integer, intent(in), optional :: timeslice
  type(ESMF_IOFmt_Flag), intent(in), optional :: iofmt
  integer, intent(out), optional :: rc
```

DESCRIPTION:

Read field data to a FieldBundle object from file(s). For this API to be functional, the environment variable `ESMF_PIO` should be set to either "internal" or "external" when the ESMF library is built. Please see the section on Data I/O, 39.2.

Limitations:

- For multi-tile Fields, all Fields in the FieldBundle must contain the same number of tiles.

The arguments are:

fieldbundle An `ESMF_FieldBundle` object.

fileName The name of the file from which FieldBundle data is read. If the FieldBundle contains multi-tile Arrays, then fileName must contain exactly one instance of "*"; this is a placeholder that will be replaced by the tile number, with each tile being read from a separate file. (For example, for a fileName of "myfile*.nc", tile 1 will be read from "myfile1.nc", tile 2 from "myfile2.nc", etc.) (This handling of the fileName for multi-tile I/O is subject to change.)

[singleFile] A logical flag, the default is .true., i.e., all Fields in the bundle are stored in one single file. If .false., each field is stored in separate files; these files are numbered with the name based on the argument "file". That is, a set of files are named: [file_name]001, [file_name]002, [file_name]003,...

[timeslice] The time-slice number of the variable read from file.

[iofmt] The I/O format. Please see Section 55.30 for the list of options. If not present, defaults to `ESMF_IOFMT_NETCDF`.

[rc] Return code; equals `ESMF_SUCCESS` if there are no errors.

26.5.20 ESMF_FieldBundleRedist - Execute a FieldBundle redistribution

INTERFACE:

```
subroutine ESMF_FieldBundleRedist(srcFieldBundle, dstFieldBundle, &
  routehandle, checkflag, rc)
```

ARGUMENTS:

```
        type(ESMF_FieldBundle), intent(in), optional :: srcFieldBundle
        type(ESMF_FieldBundle), intent(inout), optional :: dstFieldBundle
        type(ESMF_RouteHandle), intent(inout) :: routehandle
-- The following arguments require argument keyword syntax (e.g. rc=rc). --
        logical, intent(in), optional :: checkflag
        integer, intent(out), optional :: rc
```

STATUS:

- This interface is backward compatible with ESMF versions starting at 5.2.0r. If code using this interface compiles with any version of ESMF starting with 5.2.0r, then it will compile with the current version.

DESCRIPTION:

Execute a precomputed redistribution from `srcFieldBundle` to `dstFieldBundle`. Both `srcFieldBundle` and `dstFieldBundle` must match the respective FieldBundles used during `ESMF_FieldBundleRedistStore()` in *type*, *kind*, and memory layout of the *gridded* dimensions. However, the size, number, and index order of *ungridded* dimensions may be different. See section 38.2.5 for a more detailed discussion of RouteHandle reusability.

The `srcFieldBundle` and `dstFieldBundle` arguments are optional in support of the situation where `srcFieldBundle` and/or `dstFieldBundle` are not defined on all PETs. The `srcFieldBundle` and `dstFieldBundle` must be specified on those PETs that hold source or destination DEs, respectively, but may be omitted on all other PETs. PETs that hold neither source nor destination DEs may omit both arguments.

It is erroneous to specify the identical FieldBundle object for `srcFieldBundle` and `dstFieldBundle` arguments.

See `ESMF_FieldBundleRedistStore()` on how to precompute `routehandle`.

This call is *collective* across the current VM.

For examples and associated documentation regarding this method see Section 26.2.9.

[srcFieldBundle] `ESMF_FieldBundle` with source data.

[dstFieldBundle] `ESMF_FieldBundle` with destination data.

routehandle Handle to the precomputed Route.

[checkflag] If set to `.TRUE.` the input FieldBundle pair will be checked for consistency with the precomputed operation provided by `routehandle`. If set to `.FALSE.` *(default)* only a very basic input check will be performed, leaving many inconsistencies undetected. Set `checkflag` to `.FALSE.` to achieve highest performance.

[rc] Return code; equals `ESMF_SUCCESS` if there are no errors.

26.5.21 ESMF_FieldBundleRedistRelease - Release resources associated with a FieldBundle redistribution

INTERFACE:

```
subroutine ESMF_FieldBundleRedistRelease(routehandle, &
  noGarbage, rc)
```

ARGUMENTS:

```
        type(ESMF_RouteHandle), intent(inout) :: routehandle
-- The following arguments require argument keyword syntax (e.g. rc=rc). --
        logical, intent(in), optional :: noGarbage
        integer, intent(out), optional :: rc
```

STATUS:

- This interface is backward compatible with ESMF versions starting at 5.2.0r. If code using this interface compiles with any version of ESMF starting with 5.2.0r, then it will compile with the current version.
- This interface was modified since ESMF version 5.2.0r. The fact that code using this interface compiles with the current ESMF version does not guarantee that it compiles with previous versions of this interface. If user code compatibility with version 5.2.0r is desired then care must be taken to limit the use of this interface to features that were available in the 5.2.0r release.
  Changes made after the 5.2.0r release:

  8.0.0 Added argument `noGarbage`. The argument provides a mechanism to override the default garbage collection mechanism when destroying an ESMF object.

DESCRIPTION:

Release resources associated with a FieldBundle redistribution. After this call `routehandle` becomes invalid.

routehandle Handle to the precomputed Route.

[noGarbage] If set to `.TRUE.` the object will be fully destroyed and removed from the ESMF garbage collection system. Note however that under this condition ESMF cannot protect against accessing the destroyed object through dangling aliases – a situation which may lead to hard to debug application crashes.

It is generally recommended to leave the `noGarbage` argument set to `.FALSE.` (the default), and to take advantage of the ESMF garbage collection system which will prevent problems with dangling aliases or incorrect sequences of destroy calls. However this level of support requires that a small remnant of the object is kept in memory past the destroy call. This can lead to an unexpected increase in memory consumption over the course of execution in applications that use temporary ESMF objects. For situations where the repeated creation and destruction of temporary objects leads to memory issues, it is recommended to call with `noGarbage` set to `.TRUE.`, fully removing the entire temporary object from memory.

[rc] Return code; equals `ESMF_SUCCESS` if there are no errors.

26.5.22 ESMF_FieldBundleRedistStore - Precompute a FieldBundle redistribution with local factor argument

INTERFACE:

```
! Private name; call using ESMF_FieldBundleRedistStore()
subroutine ESMF_FieldBundleRedistStore<type><kind>(srcFieldBundle, &
dstFieldBundle, routehandle, factor, &
ignoreUnmatchedIndicesFlag, srcToDstTransposeMap, rc)
```

ARGUMENTS:

```
type(ESMF_FieldBundle), intent(in) :: srcFieldBundle
type(ESMF_FieldBundle), intent(inout) :: dstFieldBundle
type(ESMF_RouteHandle), intent(inout) :: routehandle
<type>(ESMF_KIND_<kind>), intent(in) :: factor
-- The following arguments require argument keyword syntax (e.g. rc=rc). --
logical, intent(in), optional :: ignoreUnmatchedIndicesFlag(:)
integer, intent(in), optional :: srcToDstTransposeMap(:)
integer, intent(out), optional :: rc
```

STATUS:

- This interface is backward compatible with ESMF versions starting at 5.2.0r. If code using this interface compiles with any version of ESMF starting with 5.2.0r, then it will compile with the current version.
- This interface was modified since ESMF version 5.2.0r. The fact that code using this interface compiles with the current ESMF version does not guarantee that it compiles with previous versions of this interface. If user code compatibility with version 5.2.0r is desired then care must be taken to limit the use of this interface to features that were available in the 5.2.0r release.
  Changes made after the 5.2.0r release:

  8.1.0 Added argument `ignoreUnmatchedIndicesFlag` to support cases where source and destination side do not cover the exact same index space.

DESCRIPTION:

Store a FieldBundle redistribution operation from `srcFieldBundle` to `dstFieldBundle`. PETs that specify a `factor` argument must use the <type><kind> overloaded interface. Other PETs call into the interface without `factor` argument. If multiple PETs specify the `factor` argument its type and kind as well as its value must match across all PETs. If none of the PETs specifies a `factor` argument the default will be a factor of 1.

Both srcFieldBundle and dstFieldBundle are interpreted as sequentialized vectors. The sequence is defined by the order of DistGrid dimensions and the order of tiles within the DistGrid or by user-supplied arbitrary sequence indices. See section 29.2.18 for details on the definition of *sequence indices*. Redistribution corresponds to an identity mapping of the source FieldBundle vector to the destination FieldBundle vector.

Source and destination FieldBundles may be of different <type><kind>. Further source and destination FieldBundles may differ in shape, however, the number of elements must match.

It is erroneous to specify the identical FieldBundle object for srcFieldBundle and dstFieldBundle arguments.

The routine returns an ESMF_RouteHandle that can be used to call ESMF_FieldBundleRedist() on any pair of FieldBundles that matches srcFieldBundle and dstFieldBundle in *type*, *kind*, and memory layout of the *gridded* dimensions. However, the size, number, and index order of *ungridded* dimensions may be different. See section 38.2.5 for a more detailed discussion of RouteHandle reusability.

This method is overloaded for:
ESMF_TYPEKIND_I4, ESMF_TYPEKIND_I8,
ESMF_TYPEKIND_R4, ESMF_TYPEKIND_R8.

This call is collective across the current VM.

For examples and associated documentation regarding this method see Section 26.2.9.

The arguments are:

srcFieldBundle ESMF_FieldBundle with source data.

dstFieldBundle ESMF_FieldBundle with destination data. The data in this FieldBundle may be destroyed by this call.

routehandle Handle to the precomputed Route.

factor Factor by which to multiply source data.

[ignoreUnmatchedIndicesFlag] If set to .false., the *default*, source and destination side must cover the identical index space, using precisely matching sequence indices. If set to .true., mismatching sequence indices between source and destination side are silently ignored. The size of this array argument must either be 1 or equal the number of Fields in the srcFieldBundle and dstFieldBundle arguments. In the latter case, the handling of unmatched indices is specified for each Field pair separately. If only one element is specified, it is used for *all* Field pairs.

[srcToDstTransposeMap] List with as many entries as there are dimensions in srcFieldBundle. Each entry maps the corresponding srcFieldBundle dimension against the specified dstFieldBundle dimension. Mixing of distributed and undistributed dimensions is supported.

[rc] Return code; equals ESMF_SUCCESS if there are no errors.

26.5.23 ESMF_FieldBundleRedistStore - Precompute a FieldBundle redistribution without local factor argument

INTERFACE:

```
! Private name; call using ESMF_FieldBundleRedistStore()
subroutine ESMF_FieldBundleRedistStoreNF(srcFieldBundle, dstFieldBundle, &
```

```
     routehandle, ignoreUnmatchedIndicesFlag, &
     srcToDstTransposeMap, rc)
```

ARGUMENTS:

```
     type(ESMF_FieldBundle), intent(in) :: srcFieldBundle
     type(ESMF_FieldBundle), intent(inout) :: dstFieldBundle
     type(ESMF_RouteHandle), intent(inout) :: routehandle
 -- The following arguments require argument keyword syntax (e.g. rc=rc). --
     logical, intent(in), optional :: ignoreUnmatchedIndicesFlag(:)
     integer, intent(in), optional :: srcToDstTransposeMap(:)
     integer, intent(out), optional :: rc
```

STATUS:

- This interface is backward compatible with ESMF versions starting at 5.2.0r. If code using this interface compiles with any version of ESMF starting with 5.2.0r, then it will compile with the current version.
- This interface was modified since ESMF version 5.2.0r. The fact that code using this interface compiles with the current ESMF version does not guarantee that it compiles with previous versions of this interface. If user code compatibility with version 5.2.0r is desired then care must be taken to limit the use of this interface to features that were available in the 5.2.0r release.
  Changes made after the 5.2.0r release:

  8.1.0 Added argument `ignoreUnmatchedIndicesFlag` to support cases where source and destination side do not cover the exact same index space.

DESCRIPTION:

Store a FieldBundle redistribution operation from `srcFieldBundle` to `dstFieldBundle`. PETs that specify non-zero matrix coefficients must use the <type><kind> overloaded interface and provide the `factorList` and `factorIndexList` arguments. Providing `factorList` and `factorIndexList` arguments with `size(factorList) = (/0/)` and `size(factorIndexList) = (/2,0/)` or `(/4,0/)` indicates that a PET does not provide matrix elements. Alternatively, PETs that do not provide matrix elements may also call into the overloaded interface *without* `factorList` and `factorIndexList` arguments.

Both `srcFieldBundle` and `dstFieldBundle` are interpreted as sequentialized vectors. The sequence is defined by the order of DistGrid dimensions and the order of tiles within the DistGrid or by user-supplied arbitrary sequence indices. See section 29.2.18 for details on the definition of *sequence indices*. Redistribution corresponds to an identity mapping of the source FieldBundle vector to the destination FieldBundle vector.

Source and destination Fields may be of different <type><kind>. Further source and destination Fields may differ in shape, however, the number of elements must match.

It is erroneous to specify the identical FieldBundle object for srcFieldBundle and dstFieldBundle arguments.

The routine returns an `ESMF_RouteHandle` that can be used to call `ESMF_FieldBundleRedist()` on any pair of FieldBundles that matches `srcFieldBundle` and `dstFieldBundle` in *type*, *kind*, and memory layout of the *gridded* dimensions. However, the size, number, and index order of *ungridded* dimensions may be different. See section 38.2.5 for a more detailed discussion of RouteHandle reusability.

This call is collective across the current VM.

For examples and associated documentation regarding this method see Section 26.2.9.

The arguments are:

srcFieldBundle `ESMF_FieldBundle` with source data.

dstFieldBundle `ESMF_FieldBundle` with destination data. The data in this FieldBundle may be destroyed by this call.

routehandle Handle to the precomputed Route.

[ignoreUnmatchedIndicesFlag] If set to .false., the *default*, source and destination side must cover the identical index space, using precisely matching sequence indices. If set to .true., mismatching sequence indices between source and destination side are silently ignored. The size of this array argument must either be 1 or equal the number of Fields in the `srcFieldBundle` and `dstFieldBundle` arguments. In the latter case, the handling of unmatched indices is specified for each Field pair separately. If only one element is specified, it is used for *all* Field pairs.

[srcToDstTransposeMap] List with as many entries as there are dimensions in `srcFieldBundle`. Each entry maps the corresponding `srcFieldBundle` dimension against the specified `dstFieldBundle` dimension. Mixing of distributed and undistributed dimensions is supported.

[rc] Return code; equals `ESMF_SUCCESS` if there are no errors.

26.5.24 ESMF_FieldBundleRegrid - Execute a FieldBundle regrid operation

INTERFACE:

```
subroutine ESMF_FieldBundleRegrid(srcFieldBundle, dstFieldBundle, &
       routehandle, zeroregion, termorderflag, checkflag, rc)
```

ARGUMENTS:

```
        type(ESMF_FieldBundle), intent(in), optional :: srcFieldBundle
        type(ESMF_FieldBundle), intent(inout), optional :: dstFieldBundle
        type(ESMF_RouteHandle), intent(inout) :: routehandle
-- The following arguments require argument keyword syntax (e.g. rc=rc). --
        type(ESMF_Region_Flag), intent(in), optional :: zeroregion
        type(ESMF_TermOrder_Flag), intent(in), optional :: termorderflag(:)
        logical, intent(in), optional :: checkflag
        integer, intent(out), optional :: rc
```

STATUS:

- This interface is backward compatible with ESMF versions starting at 5.2.0r. If code using this interface compiles with any version of ESMF starting with 5.2.0r, then it will compile with the current version.
- This interface was modified since ESMF version 5.2.0r. The fact that code using this interface compiles with the current ESMF version does not guarantee that it compiles with previous versions of this interface. If user code compatibility with version 5.2.0r is desired then care must be taken to limit the use of this interface to features that were available in the 5.2.0r release.
  Changes made after the 5.2.0r release:

  7.0.0 Added argument `termorderflag`. The new argument gives the user control over the order in which the src terms are summed up.

DESCRIPTION:

Execute a precomputed regrid from `srcFieldBundle` to `dstFieldBundle`. Both `srcFieldBundle` and `dstFieldBundle` must match the respective FieldBundles used during `ESMF_FieldBundleRedistStore()` in *type*, *kind*, and memory layout of the *gridded* dimensions. However, the size, number, and index order of *ungridded* dimensions may be different. See section 38.2.5 for a more detailed discussion of RouteHandle reusability.

The `srcFieldBundle` and `dstFieldBundle` arguments are optional in support of the situation where `srcFieldBundle` and/or `dstFieldBundle` are not defined on all PETs. The `srcFieldBundle` and `dstFieldBundle` must be specified on those PETs that hold source or destination DEs, respectively, but may be omitted on all other PETs. PETs that hold neither source nor destination DEs may omit both arguments.

It is erroneous to specify the identical FieldBundle object for `srcFieldBundle` and `dstFieldBundle` arguments.

See `ESMF_FieldBundleRegridStore()` on how to precompute `routehandle`.

This call is *collective* across the current VM.

[srcFieldBundle] `ESMF_FieldBundle` with source data.

[dstFieldBundle] `ESMF_FieldBundle` with destination data.

routehandle Handle to the precomputed Route.

[zeroregion] If set to `ESMF_REGION_TOTAL` *(default)* the total regions of all DEs in `dstFieldBundle` will be initialized to zero before updating the elements with the results of the sparse matrix multiplication. If set to `ESMF_REGION_EMPTY` the elements in `dstFieldBundle` will not be modified prior to the sparse matrix multiplication and results will be added to the incoming element values. Setting `zeroregion` to `ESMF_REGION_SELECT` will only zero out those elements in the destination FieldBundle that will be updated by the sparse matrix multiplication. See section 55.50 for a complete list of valid settings.

[termorderflag] Specifies the order of the source side terms in all of the destination sums. The `termorderflag` only affects the order of terms during the execution of the RouteHandle. See the 38.2.1 section for an in-depth discussion of *all* bit-for-bit reproducibility aspects related to route-based communication methods. See 55.60 for a full list of options. The size of this array argument must either be 1 or equal the number of Fields in the `srcFieldBundle` and `dstFieldBundle` arguments. In the latter case, the term order for each Field Regrid operation is indicated separately. If only one term order element is specified, it is used for *all* Field pairs. The default is `(/ESMF_TERMORDER_FREE/)`, allowing maximum flexibility in the order of terms for optimum performance.

[checkflag] If set to `.TRUE.` the input FieldBundle pair will be checked for consistency with the precomputed operation provided by `routehandle`. If set to `.FALSE.` *(default)* only a very basic input check will be performed, leaving many inconsistencies undetected. Set `checkflag` to `.FALSE.` to achieve highest performance.

[rc] Return code; equals `ESMF_SUCCESS` if there are no errors.

26.5.25 ESMF_FieldBundleRegridRelease - Release resources associated with a FieldBundle regrid operation

INTERFACE:

```
subroutine ESMF_FieldBundleRegridRelease(routehandle, &
  noGarbage, rc)
```

ARGUMENTS:

```
        type(ESMF_RouteHandle), intent(inout) :: routehandle
 -- The following arguments require argument keyword syntax (e.g. rc=rc). --
        logical, intent(in), optional :: noGarbage
        integer, intent(out), optional :: rc
```

STATUS:

- This interface is backward compatible with ESMF versions starting at 5.2.0r. If code using this interface compiles with any version of ESMF starting with 5.2.0r, then it will compile with the current version.
- This interface was modified since ESMF version 5.2.0r. The fact that code using this interface compiles with the current ESMF version does not guarantee that it compiles with previous versions of this interface. If user code compatibility with version 5.2.0r is desired then care must be taken to limit the use of this interface to features that were available in the 5.2.0r release.
  Changes made after the 5.2.0r release:

  8.0.0 Added argument `noGarbage`. The argument provides a mechanism to override the default garbage collection mechanism when destroying an ESMF object.

DESCRIPTION:

Release resources associated with a FieldBundle regrid operation. After this call `routehandle` becomes invalid.

routehandle Handle to the precomputed Route.

[noGarbage] If set to `.TRUE.` the object will be fully destroyed and removed from the ESMF garbage collection system. Note however that under this condition ESMF cannot protect against accessing the destroyed object through dangling aliases – a situation which may lead to hard to debug application crashes.

It is generally recommended to leave the `noGarbage` argument set to `.FALSE.` (the default), and to take advantage of the ESMF garbage collection system which will prevent problems with dangling aliases or incorrect sequences of destroy calls. However this level of support requires that a small remnant of the object is kept in memory past the destroy call. This can lead to an unexpected increase in memory consumption over the course of execution in applications that use temporary ESMF objects. For situations where the repeated creation and destruction of temporary objects leads to memory issues, it is recommended to call with `noGarbage` set to `.TRUE.`, fully removing the entire temporary object from memory.

[rc] Return code; equals `ESMF_SUCCESS` if there are no errors.

26.5.26 ESMF_FieldBundleRegridStore - Precompute a FieldBundle regrid operation

INTERFACE:

```
subroutine ESMF_FieldBundleRegridStore(srcFieldBundle, dstFieldBundle, &
     srcMaskValues, dstMaskValues, regridmethod, polemethod, regridPoleNPnts, &
     lineType, normType, extrapMethod, extrapNumSrcPnts, extrapDistExponent, &
     extrapNumLevels, unmappedaction, ignoreDegenerate, srcTermProcessing, &
     pipelineDepth, routehandle, rc)
```

ARGUMENTS:

```
    type(ESMF_FieldBundle), intent(in) :: srcFieldBundle
    type(ESMF_FieldBundle), intent(inout) :: dstFieldBundle
-- The following arguments require argument keyword syntax (e.g. rc=rc). --
    integer(ESMF_KIND_I4), target, intent(in), optional :: srcMaskValues(:)
    integer(ESMF_KIND_I4), target, intent(in), optional :: dstMaskValues(:)
    type(ESMF_RegridMethod_Flag), intent(in), optional :: regridmethod
    type(ESMF_PoleMethod_Flag), intent(in), optional :: polemethod
    integer, intent(in), optional :: regridPoleNPnts
    type(ESMF_LineType_Flag), intent(in), optional :: lineType
    type(ESMF_NormType_Flag), intent(in), optional :: normType
    type(ESMF_ExtrapMethod_Flag), intent(in), optional :: extrapMethod
    integer, intent(in), optional :: extrapNumSrcPnts
    real, intent(in), optional :: extrapDistExponent
    integer, intent(in), optional :: extrapNumLevels
    type(ESMF_UnmappedAction_Flag),intent(in), optional :: unmappedaction
    logical, intent(in), optional :: ignoreDegenerate
    integer, intent(inout), optional :: srcTermProcessing
    integer, intent(inout), optional :: pipelineDepth
    type(ESMF_RouteHandle), intent(inout), optional :: routehandle
    integer, intent(out), optional :: rc
```

STATUS:

- This interface is backward compatible with ESMF versions starting at 5.2.0r. If code using this interface compiles with any version of ESMF starting with 5.2.0r, then it will compile with the current version.
- This interface was modified since ESMF version 5.2.0r. The fact that code using this interface compiles with the current ESMF version does not guarantee that it compiles with previous versions of this interface. If user code compatibility with version 5.2.0r is desired then care must be taken to limit the use of this interface to features that were available in the 5.2.0r release.
  Changes made after the 5.2.0r release:

  7.0.0 Added arguments `ignoreDegenerate`, `lineType`, and `normType`. The argument `ignoreDegenerate` allows the user to skip degenerate cells in the regridding instead of stopping with an error. The argument `lineType` allows the user to control the path of the line between two points on a sphere surface. This allows the user to use their preferred line path for the calculation of distances and the shape of cells during regrid weight calculation on a sphere. The argument `normType` allows the user to control the type of normalization done during conservative weight generation.

  7.1.0r Added argument `srcTermProcessing`. Added argument `pipelineDepth`. The new arguments provide access to the tuning parameters affecting the performance and bit-for-bit behavior when applying the regridding weights.

  Added arguments `extrapMethod`, `extrapNumSrcPnts`, and `extrapDistExponent`. These three new extrapolation arguments allow the user to extrapolate destination points not mapped by the regrid method. `extrapMethod` allows the user to choose the extrapolation method. `extrapNumSrcPnts` and `extrapDistExponent` are parameters that allow the user to tune the behavior of the `ESMF_EXTRAPMETHOD_NEAREST_IDAVG` method.

  8.0.0 Added argument `extrapNumLevels`. For level based extrapolation methods (e.g. `ESMF_EXTRAPMETHOD_CREEP`) this argument allows the user to set how many levels to extrapolate. !

DESCRIPTION:

Store a FieldBundle regrid operation over the data in `srcFieldBundle` and `dstFieldBundle` pair.

The routine returns an `ESMF_RouteHandle` that can be used to call `ESMF_FieldBundleRegrid()` on any pair of FieldBundles that matches `srcFieldBundle` and `dstFieldBundle` in *type*, *kind*, and memory layout of the *gridded* dimensions. However, the size, number, and index order of *ungridded* dimensions may be different. See section 38.2.5 for a more detailed discussion of RouteHandle reusability.

This call is *collective* across the current VM.

srcFieldbundle Source `ESMF_FieldBundle` containing data to be regridded.

dstFieldbundle Destination `ESMF_FieldBundle`. The data in this FieldBundle may be overwritten by this call.

[srcMaskValues] Mask information can be set in the Grids (see 32.3.17) or Meshes (see 34.3.11) upon which the Fields in the `srcFieldbundle` are built. The `srcMaskValues` argument specifies the values in that mask information which indicate a source point should be masked out. In other words, a location is masked if and only if the value for that location in the mask information matches one of the values listed in `srcMaskValues`. If `srcMaskValues` is not specified, no masking will occur.

[dstMaskValues] Mask information can be set in the Grids (see 32.3.17) or Meshes (see 34.3.11) upon which the Fields in the `dstFieldbundle` are built. The `dstMaskValues` argument specifies the values in that mask information which indicate a destination point should be masked out. In other words, a location is masked if and only if the value for that location in the mask information matches one of the values listed in `dstMaskValues`. If `dstMaskValues` is not specified, no masking will occur.

[regridmethod] The type of interpolation. Please see Section 55.51 for a list of valid options. If not specified, defaults to `ESMF_REGRIDMETHOD_BILINEAR`.

[polemethod] Which type of artificial pole to construct on the source Grid for regridding. Please see section 55.48 for a list of valid options. If not specified, defaults to `ESMF_POLEMETHOD_ALLAVG`.

[regridPoleNPnts] If `polemethod` is `ESMF_POLEMETHOD_NPNTAVG`. This parameter indicates how many points should be averaged over. Must be specified if `polemethod` is `ESMF_POLEMETHOD_NPNTAVG`.

[lineType] This argument controls the path of the line which connects two points on a sphere surface. This in turn controls the path along which distances are calculated and the shape of the edges that make up a cell. Both of these quantities can influence how interpolation weights are calculated. As would be expected, this argument is only applicable when `srcField` and `dstField` are built on grids which lie on the surface of a sphere. Section 55.36 shows a list of valid options for this argument. If not specified, the default depends on the regrid method. Section 55.36 has the defaults by line type. Figure 25.2.16 shows which line types are supported for each regrid method as well as showing the default line type by regrid method.

[normType] This argument controls the type of normalization used when generating conservative weights. This option only applies to weights generated with `regridmethod=ESMF_REGRIDMETHOD_CONSERVE`. Please see Section 55.45 for a list of valid options. If not specified `normType` defaults to `ESMF_NORMTYPE_DSTAREA`.

[extrapMethod] The type of extrapolation. Please see Section 55.18 for a list of valid options. If not specified, defaults to `ESMF_EXTRAPMETHOD_NONE`.

[extrapNumSrcPnts] The number of source points to use for the extrapolation methods that use more than one source point (e.g. `ESMF_EXTRAPMETHOD_NEAREST_IDAVG`). If not specified, defaults to 8.

[extrapDistExponent] The exponent to raise the distance to when calculating weights for the `ESMF_EXTRAPMETHOD_NEAREST_IDAVG` extrapolation method. A higher value reduces the influence of more distant points. If not specified, defaults to 2.0.

[extrapNumLevels] The number of levels to output for the extrapolation methods that fill levels (e.g. `ESMF_EXTRAPMETHOD_CREEP`). When a method is used that requires this, then an error will be returned, if it is not specified.

[unmappedaction] Specifies what should happen if there are destination points that can not be mapped to a source cell. Please see Section 55.62 for a list of valid options. If not specified, `unmappedaction` defaults to `ESMF_UNMAPPEDACTION_ERROR`.

[ignoreDegenerate] Ignore degenerate cells when checking the input Grids or Meshes for errors. If this is set to true, then the regridding proceeds, but degenerate cells will be skipped. If set to false, a degenerate cell produces an error. If not specified, `ignoreDegenerate` defaults to false.

[srcTermProcessing] The `srcTermProcessing` parameter controls how many source terms, located on the same PET and summing into the same destination element, are summed into partial sums on the source PET before being transferred to the destination PET. A value of 0 indicates that the entire arithmetic is done on the destination PET; source elements are neither multiplied by their factors nor added into partial sums before being sent off by the source PET. A value of 1 indicates that source elements are multiplied by their factors on the source side before being sent to the destination PET. Larger values of `srcTermProcessing` indicate the maximum number of terms in the partial sums on the source side.

Note that partial sums may lead to bit-for-bit differences in the results. See section 38.2.1 for an in-depth discussion of *all* bit-for-bit reproducibility aspects related to route-based communication methods.

The `ESMF_FieldRegridStore()` method implements an auto-tuning scheme for the `srcTermProcessing` parameter. The intent on the `srcTermProcessing` argument is `"inout"` in order to support both overriding and accessing the auto-tuning parameter. If an argument $>= 0$ is specified, it is used for the `srcTermProcessing` parameter, and the auto-tuning phase is skipped. In this case the `srcTermProcessing` argument is not modified on return. If the provided argument is < 0, the `srcTermProcessing` parameter is determined internally using the auto-tuning scheme. In this case the `srcTermProcessing` argument is re-set to the internally determined value on return. Auto-tuning is also used if the optional `srcTermProcessing` argument is omitted.

[pipelineDepth] The `pipelineDepth` parameter controls how many messages a PET may have outstanding during a sparse matrix exchange. Larger values of `pipelineDepth` typically lead to better performance. However, on some systems too large a value may lead to performance degradation, or runtime errors.

Note that the pipeline depth has no effect on the bit-for-bit reproducibility of the results. However, it may affect the performance reproducibility of the exchange.

The `ESMF_FieldRegridStore()` method implements an auto-tuning scheme for the `pipelineDepth` parameter. The intent on the `pipelineDepth` argument is `"inout"` in order to support both overriding and accessing the auto-tuning parameter. If an argument $>= 0$ is specified, it is used for the `pipelineDepth` parameter, and the auto-tuning phase is skipped. In this case the `pipelineDepth` argument is not modified on return. If the provided argument is < 0, the `pipelineDepth` parameter is determined internally using the auto-tuning scheme. In this case the `pipelineDepth` argument is re-set to the internally determined value on return. Auto-tuning is also used if the optional `pipelineDepth` argument is omitted.

[routehandle] Handle to the precomputed Route.

[rc] Return code; equals `ESMF_SUCCESS` if there are no errors.

26.5.27 ESMF_FieldBundleRemove - Remove Fields from FieldBundle

INTERFACE:

```
subroutine ESMF_FieldBundleRemove(fieldbundle, fieldNameList, &
  multiflag, relaxedflag, rc)
```

ARGUMENTS:

```
    type(ESMF_FieldBundle), intent(inout) :: fieldbundle
    character(len=*), intent(in) :: fieldNameList(:)
-- The following arguments require argument keyword syntax (e.g. rc=rc). --
    logical, intent(in), optional :: multiflag
    logical, intent(in), optional :: relaxedflag
    integer, intent(out), optional :: rc
```

STATUS:

- This interface is backward compatible with ESMF versions starting at 5.2.0r. If code using this interface compiles with any version of ESMF starting with 5.2.0r, then it will compile with the current version.

DESCRIPTION:

Remove field(s) by name from FieldBundle. In the relaxed setting it is *not* an error if `fieldNameList` contains names that are not found in `fieldbundle`.

fieldbundle `ESMF_FieldBundle` from which to remove items.

fieldNameList List of items to remove.

[multiflag] A setting of `.true.` allows multiple Fields with the same name to be removed from `fieldbundle`. For `.false.`, items to be removed must have unique names. The default setting is `.false.`.

[relaxedflag] A setting of `.true.` indicates a relaxed definition of "remove" where it is *not* an error if `fieldNameList` contains item names that are not found in `fieldbundle`. For `.false.` this is treated as an error condition. Further, in `multiflag=.false.` mode, the relaxed definition of "remove" also covers the case where there are multiple items in `fieldbundle` that match a single entry in `fieldNameList`. For `relaxedflag=.false.` this is treated as an error condition. The default setting is `.false.`.

[rc] Return code; equals `ESMF_SUCCESS` if there are no errors.

26.5.28 ESMF_FieldBundleReplace - Replace Fields in FieldBundle

INTERFACE:

```
  subroutine ESMF_FieldBundleReplace(fieldbundle, fieldList, &
    multiflag, relaxedflag, rc)
```

ARGUMENTS:

```
    type(ESMF_FieldBundle), intent(inout) :: fieldbundle
    type(ESMF_Field), intent(in) :: fieldList(:)
-- The following arguments require argument keyword syntax (e.g. rc=rc). --
    logical, intent(in), optional :: multiflag
    logical, intent(in), optional :: relaxedflag
    integer, intent(out), optional :: rc
```

STATUS:

- This interface is backward compatible with ESMF versions starting at 5.2.0r. If code using this interface compiles with any version of ESMF starting with 5.2.0r, then it will compile with the current version.

DESCRIPTION:

Replace field(s) by name in FieldBundle. In the relaxed setting it is not an error if `fieldList` contains Fields that do not match by name any item in `fieldbundle`. These Fields are simply ignored in this case.

fieldbundle `ESMF_FieldBundle` in which to replace items.

fieldList List of items to replace.

[multiflag] A setting of `.true.` allows multiple items with the same name to be replaced in `fieldbundle`. For `.false.`, items to be replaced must have unique names. The default setting is `.false.`.

[relaxedflag] A setting of `.true.` indicates a relaxed definition of "replace" where it is *not* an error if `fieldList` contains items with names that are not found in `fieldbundle`. These items in `fieldList` are ignored in the relaxed mode. For `.false.` this is treated as an error condition. Further, in `multiflag=.false.` mode, the relaxed definition of "replace" also covers the case where there are multiple items in `fieldbundle` that match a single entry by name in `fieldList`. For `relaxedflag=.false.` this is treated as an error condition. The default setting is `.false.`.

[rc] Return code; equals `ESMF_SUCCESS` if there are no errors.

26.5.29 ESMF_FieldBundleSet - Associate a Grid with an empty FieldBundle

INTERFACE:

```
! Private name; call using ESMF_FieldBundleSet()
subroutine ESMF_FieldBundleSetGrid(fieldbundle, grid, rc)
```

ARGUMENTS:

```
type(ESMF_FieldBundle), intent(inout) :: fieldbundle
type(ESMF_Grid), intent(in) :: grid
-- The following arguments require argument keyword syntax (e.g. rc=rc). --
integer, intent(out), optional :: rc
```

DESCRIPTION:

Sets the `grid` for a `fieldbundle`.

The arguments are:

fieldbundle An `ESMF_FieldBundle` object.

grid The `ESMF_Grid` which all `ESMF_Fields` added to this `ESMF_FieldBundle` must have.

[rc] Return code; equals `ESMF_SUCCESS` if there are no errors.

26.5.30 ESMF_FieldBundleSet - Associate a Mesh with an empty FieldBundle

INTERFACE:

```
      ! Private name; call using ESMF_FieldBundleSet()
      subroutine ESMF_FieldBundleSetMesh(fieldbundle, mesh, rc)
```

ARGUMENTS:

```
      type(ESMF_FieldBundle), intent(inout) :: fieldbundle
      type(ESMF_Mesh), intent(in) :: mesh
 -- The following arguments require argument keyword syntax (e.g. rc=rc). --
      integer, intent(out), optional :: rc
```

DESCRIPTION:

Sets the `mesh` for a `fieldbundle`.

The arguments are:

fieldbundle An `ESMF_FieldBundle` object.

mesh The `ESMF_Mesh` which all `ESMF_Fields` added to this `ESMF_FieldBundle` must have.

[rc] Return code; equals `ESMF_SUCCESS` if there are no errors.

26.5.31 ESMF_FieldBundleSet - Associate a LocStream with an empty FieldBundle

INTERFACE:

```
      ! Private name; call using ESMF_FieldBundleSet()
      subroutine ESMF_FieldBundleSetLS(fieldbundle, locstream, &
        rc)
```

ARGUMENTS:

```
      type(ESMF_FieldBundle), intent(inout) :: fieldbundle
      type(ESMF_LocStream), intent(in) :: locstream
 -- The following arguments require argument keyword syntax (e.g. rc=rc). --
      integer, intent(out), optional :: rc
```

DESCRIPTION:

Sets the `locstream` for a `fieldbundle`.

The arguments are:

fieldbundle An `ESMF_FieldBundle` object.

locstream The `ESMF_LocStream` which all `ESMF_Field`s added to this `ESMF_FieldBundle` must have.

[rc] Return code; equals `ESMF_SUCCESS` if there are no errors.

26.5.32 ESMF_FieldBundleSet - Associate a XGrid with an empty FieldBundle

INTERFACE:

```
! Private name; call using ESMF_FieldBundleSet()
subroutine ESMF_FieldBundleSetXGrid(fieldbundle, xgrid, &
  rc)
```

ARGUMENTS:

```
type(ESMF_FieldBundle), intent(inout) :: fieldbundle
type(ESMF_XGrid), intent(in) :: xgrid
-- The following arguments require argument keyword syntax (e.g. rc=rc). --
integer, intent(out), optional :: rc
```

DESCRIPTION:

Sets the `xgrid` for a `fieldbundle`

The arguments are:

fieldbundle An `ESMF_FieldBundle` object.

xgrid The `ESMF_XGrid` which all `ESMF_Field`s added to this `ESMF_FieldBundle` must have.

[rc] Return code; equals `ESMF_SUCCESS` if there are no errors.

26.5.33 ESMF_FieldBundleSMM - Execute a FieldBundle sparse matrix multiplication

INTERFACE:

```
subroutine ESMF_FieldBundleSMM(srcFieldBundle, dstFieldBundle, &
  routehandle, &
  zeroregion, & ! DEPRECATED ARGUMENT
  zeroregionflag, termorderflag, checkflag, rc)
```

ARGUMENTS:

```
    type(ESMF_FieldBundle), intent(in), optional :: srcFieldBundle
    type(ESMF_FieldBundle), intent(inout), optional :: dstFieldBundle
    type(ESMF_RouteHandle), intent(inout) :: routehandle
-- The following arguments require argument keyword syntax (e.g. rc=rc). --
    type(ESMF_Region_Flag), intent(in), optional :: zeroregion ! DEPRECATED ARGUMENT
    type(ESMF_Region_Flag), intent(in), target, optional :: zeroregionflag(:)
    type(ESMF_TermOrder_Flag), intent(in), optional :: termorderflag(:)
    logical, intent(in), optional :: checkflag
    integer, intent(out), optional :: rc
```

STATUS:

- This interface is backward compatible with ESMF versions starting at 5.2.0r. If code using this interface compiles with any version of ESMF starting with 5.2.0r, then it will compile with the current version.
- This interface was modified since ESMF version 5.2.0r. The fact that code using this interface compiles with the current ESMF version does not guarantee that it compiles with previous versions of this interface. If user code compatibility with version 5.2.0r is desired then care must be taken to limit the use of this interface to features that were available in the 5.2.0r release.
  Changes made after the 5.2.0r release:

  7.0.0 Added argument `termorderflag`. The new argument gives the user control over the order in which the src terms are summed up.

  8.1.0 Added argument `zeroregionflag`, and deprecated `zeroregion`. The new argument allows greater flexibility in setting the zero region for individual FieldBundle members.

DESCRIPTION:

Execute a precomputed sparse matrix multiplication from `srcFieldBundle` to `dstFieldBundle`. Both `srcFieldBundle` and `dstFieldBundle` must match the respective FieldBundles used during `ESMF_FieldBundleRedistStore()` in *type*, *kind*, and memory layout of the *gridded* dimensions. However, the size, number, and index order of *ungridded* dimensions may be different. See section 38.2.5 for a more detailed discussion of RouteHandle reusability.

The `srcFieldBundle` and `dstFieldBundle` arguments are optional in support of the situation where `srcFieldBundle` and/or `dstFieldBundle` are not defined on all PETs. The `srcFieldBundle` and `dstFieldBundle` must be specified on those PETs that hold source or destination DEs, respectively, but may be omitted on all other PETs. PETs that hold neither source nor destination DEs may omit both arguments.

It is erroneous to specify the identical FieldBundle object for `srcFieldBundle` and `dstFieldBundle` arguments.

See `ESMF_FieldBundleSMMStore()` on how to precompute `routehandle`.

This call is *collective* across the current VM.

For examples and associated documentation regarding this method see Section 26.2.11.

[srcFieldBundle] `ESMF_FieldBundle` with source data.

[dstFieldBundle] `ESMF_FieldBundle` with destination data.

routehandle Handle to the precomputed Route.

[zeroregion] If set to `ESMF_REGION_TOTAL` *(default)* the total regions of all DEs in all Fields in `dstFieldBundle` will be initialized to zero before updating the elements with the results of the sparse matrix multiplication. If set to `ESMF_REGION_EMPTY` the elements in the Fields in `dstFieldBundle` will not be

modified prior to the sparse matrix multiplication and results will be added to the incoming element values. Setting `zeroregion` to `ESMF_REGION_SELECT` will only zero out those elements in the destination Fields that will be updated by the sparse matrix multiplication. See section 55.50

[zeroregionflag] If set to `ESMF_REGION_TOTAL` *(default)* the total regions of all DEs in the destination Field will be initialized to zero before updating the elements with the results of the sparse matrix multiplication. If set to `ESMF_REGION_EMPTY` the elements in the destination Field will not be modified prior to the sparse matrix multiplication and results will be added to the incoming element values. A setting of `ESMF_REGION_SELECT` will only zero out those elements in the destination Field that will be updated by the sparse matrix multiplication. See section 55.50 for a complete list of valid settings. The size of this array argument must either be 1 or equal the number of Fields in the `srcFieldBundle` and `dstFieldBundle` arguments. In the latter case, the zero region for each Field SMM operation is indicated separately. If only one zero region element is specified, it is used for *all* Field pairs.

[termorderflag] Specifies the order of the source side terms in all of the destination sums. The `termorderflag` only affects the order of terms during the execution of the RouteHandle. See the 38.2.1 section for an in-depth discussion of *all* bit-for-bit reproducibility aspects related to route-based communication methods. See 55.60 for a full list of options. The size of this array argument must either be 1 or equal the number of Fields in the `srcFieldBundle` and `dstFieldBundle` arguments. In the latter case, the term order for each Field SMM operation is indicated separately. If only one term order element is specified, it is used for *all* Field pairs. The default is `(/ESMF_TERMORDER_FREE/)`, allowing maximum flexibility in the order of terms for optimum performance.

[checkflag] If set to `.TRUE.` the input FieldBundle pair will be checked for consistency with the precomputed operation provided by `routehandle`. If set to `.FALSE.` *(default)* only a very basic input check will be performed, leaving many inconsistencies undetected. Set `checkflag` to `.FALSE.` to achieve highest performance.

[rc] Return code; equals `ESMF_SUCCESS` if there are no errors.

26.5.34 ESMF_FieldBundleSMMRelease - Release resources associated with a FieldBundle sparse matrix multiplication

INTERFACE:

```
subroutine ESMF_FieldBundleSMMRelease(routehandle, &
  noGarbage, rc)
```

ARGUMENTS:

```
        type(ESMF_RouteHandle), intent(inout) :: routehandle
 -- The following arguments require argument keyword syntax (e.g. rc=rc). --
        logical, intent(in), optional :: noGarbage
        integer, intent(out), optional :: rc
```

STATUS:

- This interface is backward compatible with ESMF versions starting at 5.2.0r. If code using this interface compiles with any version of ESMF starting with 5.2.0r, then it will compile with the current version.

- This interface was modified since ESMF version 5.2.0r. The fact that code using this interface compiles with the current ESMF version does not guarantee that it compiles with previous versions of this interface. If user code compatibility with version 5.2.0r is desired then care must be taken to limit the use of this interface to features that were available in the 5.2.0r release.
  Changes made after the 5.2.0r release:

  8.0.0 Added argument `noGarbage`. The argument provides a mechanism to override the default garbage collection mechanism when destroying an ESMF object.

DESCRIPTION:

Release resources associated with a FieldBundle sparse matrix multiplication. After this call `routehandle` becomes invalid.

routehandle Handle to the precomputed Route.

[noGarbage] If set to `.TRUE.` the object will be fully destroyed and removed from the ESMF garbage collection system. Note however that under this condition ESMF cannot protect against accessing the destroyed object through dangling aliases – a situation which may lead to hard to debug application crashes.

It is generally recommended to leave the `noGarbage` argument set to `.FALSE.` (the default), and to take advantage of the ESMF garbage collection system which will prevent problems with dangling aliases or incorrect sequences of destroy calls. However this level of support requires that a small remnant of the object is kept in memory past the destroy call. This can lead to an unexpected increase in memory consumption over the course of execution in applications that use temporary ESMF objects. For situations where the repeated creation and destruction of temporary objects leads to memory issues, it is recommended to call with `noGarbage` set to `.TRUE.`, fully removing the entire temporary object from memory.

[rc] Return code; equals `ESMF_SUCCESS` if there are no errors.

26.5.35 ESMF_FieldBundleSMMStore - Precompute a FieldBundle sparse matrix multiplication with local factors

INTERFACE:

```
! Private name; call using ESMF_FieldBundleSMMStore()
subroutine ESMF_FieldBundleSMMStore<type><kind>(srcFieldBundle, &
dstFieldBundle, routehandle, factorList, factorIndexList, &
ignoreUnmatchedIndicesFlag, srcTermProcessing, rc)
```

ARGUMENTS:

```
type(ESMF_FieldBundle), intent(in) :: srcFieldBundle
type(ESMF_FieldBundle), intent(inout) :: dstFieldBundle
type(ESMF_RouteHandle), intent(inout) :: routehandle
<type>(ESMF_KIND_<kind>), intent(in) :: factorList(:)
integer, intent(in), :: factorIndexList(:,:)
-- The following arguments require argument keyword syntax (e.g. rc=rc). --
logical, intent(in), optional :: ignoreUnmatchedIndicesFlag(:)
integer, intent(inout), optional :: srcTermProcessing(:)
integer, intent(out), optional :: rc
```

STATUS:

- This interface is backward compatible with ESMF versions starting at 5.2.0r. If code using this interface compiles with any version of ESMF starting with 5.2.0r, then it will compile with the current version.
- This interface was modified since ESMF version 5.2.0r. The fact that code using this interface compiles with the current ESMF version does not guarantee that it compiles with previous versions of this interface. If user code compatibility with version 5.2.0r is desired then care must be taken to limit the use of this interface to features that were available in the 5.2.0r release.
  Changes made after the 5.2.0r release:

  7.1.0r Added argument `srcTermProcessing`. The new argument gives the user access to the tuning parameter affecting the sparse matrix execution and bit-wise reproducibility.

  8.1.0 Added argument `ignoreUnmatchedIndicesFlag` to support cases where the sparse matrix includes terms with source or destination sequence indices not present in the source or destination field.

DESCRIPTION:

Store a FieldBundle sparse matrix multiplication operation from `srcFieldBundle` to `dstFieldBundle`. PETs that specify non-zero matrix coefficients must use the <type><kind> overloaded interface and provide the `factorList` and `factorIndexList` arguments. Providing `factorList` and `factorIndexList` arguments with `size(factorList) = (/0/)` and `size(factorIndexList) = (/2,0/)` or `(/4,0/)` indicates that a PET does not provide matrix elements. Alternatively, PETs that do not provide matrix elements may also call into the overloaded interface *without* `factorList` and `factorIndexList` arguments.

Both `srcFieldBundle` and `dstFieldBundle` are interpreted as sequentialized vectors. The sequence is defined by the order of DistGrid dimensions and the order of tiles within the DistGrid or by user-supplied arbitrary sequence indices. See section 29.2.18 for details on the definition of *sequence indices*. SMM corresponds to an identity mapping of the source FieldBundle vector to the destination FieldBundle vector.

Source and destination Fields may be of different <type><kind>. Further source and destination Fields may differ in shape, however, the number of elements must match.

It is erroneous to specify the identical FieldBundle object for srcFieldBundle and dstFieldBundle arguments.

The routine returns an `ESMF_RouteHandle` that can be used to call `ESMF_FieldBundleSMM()` on any pair of FieldBundles that matches `srcFieldBundle` and `dstFieldBundle` in *type*, *kind*, and memory layout of the *gridded* dimensions. However, the size, number, and index order of *ungridded* dimensions may be different. See section 38.2.5 for a more detailed discussion of RouteHandle reusability.

This method is overloaded for:
`ESMF_TYPEKIND_I4`, `ESMF_TYPEKIND_I8`,
`ESMF_TYPEKIND_R4`, `ESMF_TYPEKIND_R8`.

This call is collective across the current VM.

For examples and associated documentation regarding this method see Section 26.2.11.

The arguments are:

srcFieldBundle `ESMF_FieldBundle` with source data.

dstFieldBundle `ESMF_FieldBundle` with destination data. The data in this FieldBundle may be destroyed by this call.

routehandle Handle to the precomputed Route.

factorList List of non-zero coefficients.

factorIndexList Pairs of sequence indices for the factors stored in `factorList`.

The second dimension of `factorIndexList` steps through the list of pairs, i.e. `size(factorIndexList,2) == size(factorList)`. The first dimension of `factorIndexList` is either of size 2 or size 4.

In the *size 2 format* `factorIndexList(1,:)` specifies the sequence index of the source element in the `srcFieldBundle` while `factorIndexList(2,:)` specifies the sequence index of the destination element in `dstFieldBundle`. For this format to be a valid option source and destination FieldBundles must have matching number of tensor elements (the product of the sizes of all Field tensor dimensions). Under this condition an identity matrix can be applied within the space of tensor elements for each sparse matrix factor.

The *size 4 format* is more general and does not require a matching tensor element count. Here the

`factorIndexList(1,:)` specifies the sequence index while `factorIndexList(2,:)` specifies the tensor sequence index of the source element in the `srcFieldBundle`. Further `factorIndexList(3,:)` specifies the sequence index and `factorIndexList(4,:)` specifies the tensor sequence index of the destination element in the `dstFieldBundle`.

See section 29.2.18 for details on the definition of *sequence indices* and *tensor sequence indices*.

[ignoreUnmatchedIndicesFlag] If set to .false., the *default*, source and destination side must cover all of the squence indices defined in the sparse matrix. An error will be returned if a sequence index in the sparse matrix does not match on either the source or destination side. If set to .true., mismatching sequence indices are silently ignored. The size of this array argument must either be 1 or equal the number of Fieldss in the `srcFieldBundle` and `dstFieldBundle` arguments. In the latter case, the handling of unmatched indices is specified for each Field pair separately. If only one element is specified, it is used for *all* Field pairs.

[srcTermProcessing] Source term summing options for route handle creation. See `ESMF_FieldRegridStore` documentation for a full parameter description. Two forms may be provided. If a single element list is provided, this integer value is applied across all bundle members. Otherwise, the list must contain as many elements as there are bundle members. For the special case of accessing the auto-tuned parameter (providing a negative integer value), the list length must equal the bundle member count.

[rc] Return code; equals `ESMF_SUCCESS` if there are no errors.

26.5.36 ESMF_FieldBundleSMMStore - Precompute a FieldBundle sparse matrix multiplication

INTERFACE:

```
  ! Private name; call using ESMF_FieldBundleSMMStore()
    subroutine ESMF_FieldBundleSMMStoreNF(srcFieldBundle, dstFieldBundle, &
        routehandle, ignoreUnmatchedIndicesFlag, &
        srcTermProcessing, rc)
```

ARGUMENTS:

```
        type(ESMF_FieldBundle), intent(in) :: srcFieldBundle
        type(ESMF_FieldBundle), intent(inout) :: dstFieldBundle
        type(ESMF_RouteHandle), intent(inout) :: routehandle
-- The following arguments require argument keyword syntax (e.g. rc=rc). --
        logical, intent(in), optional :: ignoreUnmatchedIndicesFlag(:)
        integer, intent(inout), optional :: srcTermProcessing(:)
        integer, intent(out), optional :: rc
```

STATUS:

- This interface is backward compatible with ESMF versions starting at 5.2.0r. If code using this interface compiles with any version of ESMF starting with 5.2.0r, then it will compile with the current version.
- This interface was modified since ESMF version 5.2.0r. The fact that code using this interface compiles with the current ESMF version does not guarantee that it compiles with previous versions of this interface. If user code compatibility with version 5.2.0r is desired then care must be taken to limit the use of this interface to features that were available in the 5.2.0r release.
  Changes made after the 5.2.0r release:

  7.1.0r Added argument `srcTermProcessing`. The new argument gives the user access to the tuning parameter affecting the sparse matrix execution and bit-wise reproducibility.

  8.1.0 Added argument `ignoreUnmatchedIndicesFlag` to support cases where the sparse matrix includes terms with source or destination sequence indices not present in the source or destination field.

DESCRIPTION:

Store a FieldBundle sparse matrix multiplication operation from `srcFieldBundle` to `dstFieldBundle`. PETs that specify non-zero matrix coefficients must use the <type><kind> overloaded interface and provide the `factorList` and `factorIndexList` arguments. Providing `factorList` and `factorIndexList` arguments with `size(factorList) = (/0/)` and `size(factorIndexList) = (/2,0/)` or `(/4,0/)` indicates that a PET does not provide matrix elements. Alternatively, PETs that do not provide matrix elements may also call into the overloaded interface *without* `factorList` and `factorIndexList` arguments.

Both `srcFieldBundle` and `dstFieldBundle` are interpreted as sequentialized vectors. The sequence is defined by the order of DistGrid dimensions and the order of tiles within the DistGrid or by user-supplied arbitrary sequence indices. See section 29.2.18 for details on the definition of *sequence indices*. SMM corresponds to an identity mapping of the source FieldBundle vector to the destination FieldBundle vector.

Source and destination Fields may be of different <type><kind>. Further source and destination Fields may differ in shape, however, the number of elements must match.

It is erroneous to specify the identical FieldBundle object for srcFieldBundle and dstFieldBundle arguments.

The routine returns an `ESMF_RouteHandle` that can be used to call `ESMF_FieldBundleSMM()` on any pair of FieldBundles that matches `srcFieldBundle` and `dstFieldBundle` in *type*, *kind*, and memory layout of the *gridded* dimensions. However, the size, number, and index order of *ungridded* dimensions may be different. See section 38.2.5 for a more detailed discussion of RouteHandle reusability.

This method is overloaded for `ESMF_TYPEKIND_I4`, `ESMF_TYPEKIND_I8`, `ESMF_TYPEKIND_R4`, `ESMF_TYPEKIND_R8`.

This call is collective across the current VM.

For examples and associated documentation regarding this method see Section 26.2.11.

The arguments are:

srcFieldBundle `ESMF_FieldBundle` with source data.

dstFieldBundle `ESMF_FieldBundle` with destination data. The data in this FieldBundle may be destroyed by this call.

routehandle Handle to the precomputed Route.

[ignoreUnmatchedIndicesFlag] If set to .false., the *default*, source and destination side must cover all of the squence indices defined in the sparse matrix. An error will be returned if a sequence index in the sparse matrix does not

match on either the source or destination side. If set to .true., mismatching sequence indices are silently ignored. The size of this array argument must either be 1 or equal the number of Fieldss in the `srcFieldBundle` and `dstFieldBundle` arguments. In the latter case, the handling of unmatched indices is specified for each Field pair separately. If only one element is specified, it is used for *all* Field pairs.

[srcTermProcessing] Source term summing options for route handle creation. See `ESMF_FieldRegridStore` documentation for a full parameter description. Two forms may be provided. If a single element list is provided, this integer value is applied across all bundle members. Otherwise, the list must contain as many elements as there are bundle members. For the special case of accessing the auto-tuned parameter (providing a negative integer value), the list length must equal the bundle member count.

[rc] Return code; equals `ESMF_SUCCESS` if there are no errors.

26.5.37 ESMF_FieldBundleSMMStore - Precompute field bundle sparse matrix multiplication using factors read from file

INTERFACE:

```
  ! Private name; call using ESMF_FieldBundleSMMStore()
    subroutine ESMF_FieldBundleSMMStoreFromFile(srcFieldBundle, dstFieldBundle, &
      filename, routehandle, ignoreUnmatchedIndicesFlag, &
      srcTermProcessing, rc)
  ! ARGUMENTS:
      type(ESMF_FieldBundle), intent(in) :: srcFieldBundle
      type(ESMF_FieldBundle), intent(inout) :: dstFieldBundle
      character(len=*), intent(in) :: filename
      type(ESMF_RouteHandle), intent(inout) :: routehandle
 -- The following arguments require argument keyword syntax (e.g. rc=rc). --
      logical, intent(in), optional :: ignoreUnmatchedIndicesFlag(:)
      integer, intent(inout), optional :: srcTermProcessing(:)
      integer, intent(out), optional :: rc
```

DESCRIPTION:

Compute an `ESMF_RouteHandle` using factors read from file.

The arguments are:

srcFieldBundle `ESMF_FieldBundle` with source data.

dstFieldBundle `ESMF_FieldBundle` with destination data. The data in this field bundle may be destroyed by this call.

filename Path to the file containing weights for creating an `ESMF_RouteHandle`. See (12.9) for a description of the SCRIP weight file format. Only "row", "col", and "S" variables are required. They must be one-dimensionsal with dimension "n_s".

routehandle Handle to the `ESMF_RouteHandle`.

[ignoreUnmatchedIndicesFlag] If set to .false., the *default*, source and destination side must cover all of the squence indices defined in the sparse matrix. An error will be returned if a sequence index in the sparse matrix does not

match on either the source or destination side. If set to .true., mismatching sequence indices are silently ignored. The size of this array argument must either be 1 or equal the number of Fieldss in the `srcFieldBundle` and `dstFieldBundle` arguments. In the latter case, the handling of unmatched indices is specified for each Field pair separately. If only one element is specified, it is used for *all* Field pairs.

[srcTermProcessing] Source term summing options for route handle creation. See `ESMF_FieldRegridStore` documentation for a full parameter description. Two forms may be provided. If a single element list is provided, this integer value is applied across all bundle members. Otherwise, the list must contain as many elements as there are bundle members. For the special case of accessing the auto-tuned parameter (providing a negative integer value), the list length must equal the bundle member count.

[rc] Return code; equals `ESMF_SUCCESS` if there are no errors.

26.5.38 ESMF_FieldBundleValidate - Validate fieldbundle internals

INTERFACE:

```
subroutine ESMF_FieldBundleValidate(fieldbundle, rc)
```

ARGUMENTS:

```
type(ESMF_FieldBundle), intent(in) :: fieldbundle
integer, intent(out), optional :: rc
```

DESCRIPTION:

Validates that the `fieldbundle` is internally consistent. The method returns an error code if problems are found.

The arguments are:

fieldbundle Specified `ESMF_FieldBundle` object.

[rc] Return code; equals `ESMF_SUCCESS` if there are no errors.

26.5.39 ESMF_FieldBundleWrite - Write the Fields into a file

INTERFACE:

```
subroutine ESMF_FieldBundleWrite(fieldbundle, fileName, &
    convention, purpose, singleFile, overwrite, status, timeslice, iofmt, rc)
```

ARGUMENTS:

```
    type(ESMF_FieldBundle), intent(in) :: fieldbundle
    character(*), intent(in) :: fileName
-- The following arguments require argument keyword syntax (e.g. rc=rc). --
    character(*), intent(in), optional :: convention
    character(*), intent(in), optional :: purpose
    logical, intent(in), optional :: singleFile
    logical , intent(in), optional :: overwrite
    type(ESMF_FileStatus_Flag), intent(in), optional :: status
    integer, intent(in), optional :: timeslice
    type(ESMF_IOFmt_Flag), intent(in), optional :: iofmt
    integer, intent(out), optional :: rc
```

DESCRIPTION:

Write the Fields into a file. For this API to be functional, the environment variable `ESMF_PIO` should be set to either "internal" or "external" when the ESMF library is built. Please see the section on Data I/O, 39.2.

When `convention` and `purpose` arguments are specified, NetCDF dimension labels and variable attributes are written from each Field in the FieldBundle from the corresponding Attribute package. Additionally, Attributes may be set on the FieldBundle level under the same Attribute package. This allows the specification of global attributes within the file. As with individual Fields, the value associated with each name may be either a scalar character string, or a scalar or array of type integer, real, or double precision.

Limitations:

- For multi-tile Fields, all Fields in the FieldBundle must contain the same number of tiles.

The arguments are:

fieldbundle An `ESMF_FieldBundle` object.

fileName The name of the output file to which field bundle data is written. If the FieldBundle contains multi-tile Arrays, then fileName must contain exactly one instance of "*"; this is a placeholder that will be replaced by the tile number, with each tile being written to a separate file. (For example, for a fileName of "myfile*.nc", tile 1 will be written to "myfile1.nc", tile 2 to "myfile2.nc", etc.) (This handling of the fileName for multi-tile I/O is subject to change.)

[convention] Specifies an Attribute package associated with the FieldBundle, and the contained Fields, used to create NetCDF dimension labels and attributes in the file. When this argument is present, the `purpose` argument must also be present. Use this argument only with a NetCDF I/O format. If binary format is used, ESMF will return an error code.

[purpose] Specifies an Attribute package associated with the FieldBundle, and the contained Fields, used to create NetCDF dimension labels and attributes in the file. When this argument is present, the `convention` argument must also be present. Use this argument only with a NetCDF I/O format. If binary format is used, ESMF will return an error code.

[singleFile] A logical flag, the default is .true., i.e., all fields in the bundle are written in one single file. If .false., each field will be written in separate files; these files are numbered with the name based on the argument "file". That is, a set of files are named: [file_name]001, [file_name]002, [file_name]003,...

[overwrite] A logical flag, the default is .false., i.e., existing field data may *not* be overwritten. If .true., only the data corresponding to the fields name will be be overwritten. If the `timeslice` option is given, only data for the given timeslice will be overwritten. Note that it is always an error to attempt to overwrite a NetCDF variable with data which has a different shape.

[status] The file status. Please see Section 55.22 for the list of options. If not present, defaults to `ESMF_FILESTATUS_UNKNOWN`.

[timeslice] Some I/O formats (e.g. NetCDF) support the output of data in form of time slices. The `timeslice` argument provides access to this capability. `timeslice` must be positive. The behavior of this option may depend on the setting of the `overwrite` flag:

`overwrite = .false.`**:** If the timeslice value is less than the maximum time already in the file, the write will fail.

`overwrite = .true.`**:** Any positive timeslice value is valid.

By default, i.e. by omitting the `timeslice` argument, no provisions for time slicing are made in the output file, however, if the file already contains a time axis for the variable, a timeslice one greater than the maximum will be written.

[iofmt] The I/O format. Please see Section 55.30 for the list of options. If not present, defaults to `ESMF_IOFMT_NETCDF`.

[rc] Return code; equals `ESMF_SUCCESS` if there are no errors.

27 Field Class

27.1 Description

An ESMF Field represents a physical field, such as temperature. The motivation for including Fields in ESMF is that bundles of Fields are the entities that are normally exchanged when coupling Components.

The ESMF Field class contains distributed and discretized field data, a reference to its associated grid, and metadata. The Field class stores the grid *staggering* for that physical field. This is the relationship of how the data array of a field maps onto a grid (e.g. one item per cell located at the cell center, one item per cell located at the NW corner, one item per cell vertex, etc.). This means that different Fields which are on the same underlying ESMF Grid but have different staggerings can share the same Grid object without needing to replicate it multiple times.

Fields can be added to States for use in inter-Component data communications. Fields can also be added to FieldBundles, which are groups of Fields on the same underlying Grid. One motivation for packing Fields into FieldBundles is convenience; another is the ability to perform optimized collective data transfers.

Field communication capabilities include: data redistribution, regridding, scatter, gather, sparse-matrix multiplication, and halo update. These are discussed in more detail in the documentation for the specific method calls. ESMF does not currently support vector fields, so the components of a vector field must be stored as separate Field objects.

27.1.1 Operations

The Field class allows the user to easily perform a number of operations on the data stored in a Field. This section gives a brief summary of the different types of operations and the range of their capabilities. The operations covered here are: redistribution (`ESMF_FieldRedistStore()`), sparse matrix multiply (`ESMF_FieldSMMStore()`), and regridding (`ESMF_FieldRegridStore()`).

The redistribution operation (`ESMF_FieldRedistStore()`) allows the user to move data between two Fields with the same size, but different distribution. This operation is useful, for example, to move data between two components with different distributions. Please see Section 27.3.30 for an example of the redistribution capability.

The sparse matrix multiplication operation (`ESMF_FieldSMMStore()`) allows the user to multiply the data in a Field by a sparse matrix. This operation is useful, for example, if the user has an interpolation matrix and wants to apply it to the data in a Field. Please see Section 27.3.33 for an example of the sparse matrix multiply capability.

The regridding operation (`ESMF_FieldRegridStore()`) allows the user to move data from one grid to another while maintaining certain properties of the data. Regridding is also called interpolation or remapping. In the Field regridding operation the grids the data is being moved between are the grids associated with the Fields storing the data. The regridding operation works on Fields built on Meshes, Grids, or Location Streams. There are six regridding methods available: bilinear, higher-order patch, two types of nearest neighbor, first-order conservative, and second-order conservative. Please see section 25.2 for a more indepth description of regridding including in which situations each method is supported. Please see section 27.3.25 for a description of the regridding capability as it applies to Fields. Several sections following section 27.3.25 contain examples of using regridding.

27.2 Constants

27.2.1 ESMF_FIELDSTATUS

DESCRIPTION:

An ESMF_Field can be in different status after initialization. Field status can be queried using `ESMF_FieldGet()` method.

The type of this flag is:

`type(ESMF_FieldStatus_Flag)`

The valid values are:

ESMF_FIELDSTATUS_EMPTY Field is empty without geombase or data storage. Such a Field can be added to a `ESMF_State` and participate `ESMF_StateReconcile()`.

ESMF_FIELDSTATUS_GRIDSET Field is partially created. It has a geombase object internally created and the geombase object associates with either a `ESMF_Grid`, or a `ESMF_Mesh`, or an `ESMF_XGrid`, or a `ESMF_LocStream`. It's an error to set another geombase object in such a Field. It can also be added to a `ESMF_State` and participate `ESMF_StateReconcile()`.

ESMF_FIELDSTATUS_COMPLETE Field is completely created with geombase and data storage internally allocated.

27.3 Use and Examples

A Field serves as an annotator of data, since it carries a description of the grid it is associated with and metadata such as name and units. Fields can be used in this capacity alone, as convenient, descriptive containers into which arrays can be placed and retrieved. However, for most codes the primary use of Fields is in the context of import and export States, which are the objects that carry coupling information between Components. Fields enable data to be self-describing, and a State holding ESMF Fields contains data in a standard format that can be queried and manipulated.

The sections below go into more detail about Field usage.

27.3.1 Field create and destroy

Fields can be created and destroyed at any time during application execution. However, these Field methods require some time to complete. We do not recommend that the user create or destroy Fields inside performance-critical computational loops.

All versions of the `ESMF_FieldCreate()` routines require a Grid object as input, or require a Grid be added before most operations involving Fields can be performed. The Grid contains the information needed to know which Decomposition Elements (DEs) are participating in the processing of this Field, and which subsets of the data are local to a particular DE.

The details of how the create process happens depend on which of the variants of the `ESMF_FieldCreate()` call is used. Some of the variants are discussed below.

There are versions of the `ESMF_FieldCreate()` interface which create the Field based on the input Grid. The ESMF can allocate the proper amount of space but not assign initial values. The user code can then get the pointer to the uninitialized buffer and set the initial data values.

Other versions of the `ESMF_FieldCreate()` interface allow user code to attach arrays that have already been allocated by the user. Empty Fields can also be created in which case the data can be added at some later time.

For versions of Create which do not specify data values, user code can create an ArraySpec object, which contains information about the typekind and rank of the data values in the array. Then at Field create time, the appropriate amount of memory is allocated to contain the data which is local to each DE.

When finished with a `ESMF_Field`, the `ESMF_FieldDestroy` method removes it. However, the objects inside the `ESMF_Field` created externally should be destroyed separately, since objects can be added to more than one `ESMF_Field`. For example, the same `ESMF_Grid` can be referenced by multiple `ESMF_Fields`. In this case the internal Grid is not deleted by the `ESMF_FieldDestroy` call.

27.3.2 Get Fortran data pointer, bounds, and counts information from a Field

A user can get bounds and counts information from an `ESMF_Field` through the `ESMF_FieldGet()` interface. Also available through this interface is the intrinsic Fortran data pointer contained in the internal `ESMF_Array` object of an `ESMF_Field`. The bounds and counts information are DE specific for the associated Fortran data pointer.

For a better discussion of the terminologies, bounds and widths in ESMF e.g. exclusive, computational, total bounds for the lower and upper corner of data region, etc.., user can refer to the explanation of these concepts for Grid and Array in their respective sections in the *Reference Manual*, e.g. Section 29.2.6 on Array and Section 32.3.19 on Grid.

In this example, we first create a 3D Field based on a 3D Grid and Array. Then we use the `ESMF_FieldGet()` interface to retrieve the data pointer, potentially updating or verifying its values. We also retrieve the bounds and counts information of the 3D Field to assist in data element iteration.

```
xdim = 180
ydim = 90
zdim = 50

! create a 3D data Field from a Grid and Array.
! first create a Grid
grid3d = ESMF_GridCreateNoPeriDim(minIndex=(/1,1,1/), &
        maxIndex=(/xdim,ydim,zdim/), &
        regDecomp=(/2,2,1/), name="grid", rc=rc)
if (rc /= ESMF_SUCCESS) call ESMF_Finalize(endflag=ESMF_END_ABORT)
```

```
call ESMF_GridGet(grid=grid3d, staggerloc=ESMF_STAGGERLOC_CENTER, &
       distgrid=distgrid3d, rc=rc)
if (rc /= ESMF_SUCCESS) call ESMF_Finalize(endflag=ESMF_END_ABORT)

call ESMF_GridGetFieldBounds(grid=grid3d, localDe=0, &
    staggerloc=ESMF_STAGGERLOC_CENTER, totalCount=fa_shape, rc=rc)
if (rc /= ESMF_SUCCESS) call ESMF_Finalize(endflag=ESMF_END_ABORT)

allocate(farray(fa_shape(1), fa_shape(2), fa_shape(3)) )

! create an Array
array3d = ESMF_ArrayCreate(distgrid3d, farray, &
    indexflag=ESMF_INDEX_DELOCAL, rc=rc)
if (rc /= ESMF_SUCCESS) call ESMF_Finalize(endflag=ESMF_END_ABORT)

! create a Field
field = ESMF_FieldCreate(grid=grid3d, array=array3d, rc=rc)
if (rc /= ESMF_SUCCESS) call ESMF_Finalize(endflag=ESMF_END_ABORT)

! retrieve the Fortran data pointer from the Field
call ESMF_FieldGet(field=field, localDe=0, farrayPtr=farray1, rc=rc)
if (rc /= ESMF_SUCCESS) call ESMF_Finalize(endflag=ESMF_END_ABORT)

! retrieve the Fortran data pointer from the Field and bounds
call ESMF_FieldGet(field=field, localDe=0, farrayPtr=farray1, &
    computationalLBound=compLBnd, computationalUBound=compUBnd, &
    exclusiveLBound=exclLBnd, exclusiveUBound=exclUBnd, &
    totalLBound=totalLBnd, totalUBound=totalUBnd, &
    computationalCount=comp_count, &
    exclusiveCount=excl_count, &
    totalCount=total_count, &
    rc=rc)


! iterate through the total bounds of the field data pointer
do k = totalLBnd(3), totalUBnd(3)
    do j = totalLBnd(2), totalUBnd(2)
        do i = totalLBnd(1), totalUBnd(1)
            farray1(i, j, k) = sin(2*i/total_count(1)*PI) + &
                sin(4*j/total_count(2)*PI) + &
                sin(8*k/total_count(2)*PI)
        enddo
    enddo
enddo
```

27.3.3 Get Grid, Array, and other information from a Field

A user can get the internal `ESMF_Grid` and `ESMF_Array` from a `ESMF_Field`. Note that the user should not issue any destroy command on the retrieved grid or array object since they are referenced from within the `ESMF_Field`. The retrieved objects should be used in a read-only fashion to query additional information not directly available through the `ESMF_FieldGet()` interface.

```
call ESMF_FieldGet(field, grid=grid, array=array, &
    typekind=typekind, dimCount=dimCount, staggerloc=staggerloc, &
```

```
    gridToFieldMap=gridToFieldMap, &
    ungriddedLBound=ungriddedLBound, ungriddedUBound=ungriddedUBound, &
    totalLWidth=totalLWidth, totalUWidth=totalUWidth, &
    name=name, &
    rc=rc)
```

27.3.4 Create a Field with a Grid, typekind, and rank

A user can create an `ESMF_Field` from an `ESMF_Grid` and typekind/rank. This create method associates the two objects.

We first create a Grid with a regular distribution that is 10x20 index in 2x2 DEs. This version of Field create simply associates the data with the Grid. The data is referenced explicitly on a regular 2x2 uniform grid. Finally we create a Field from the Grid, typekind, rank, and a user specified StaggerLoc.

This example also illustrates a typical use of this Field creation method. By creating a Field from a Grid and typekind/rank, the user allows the ESMF library to create a internal Array in the Field. Then the user can use `ESMF_FieldGet()` to retrieve the Fortran data array and necessary bounds information to assign initial values to it.

```
! create a grid
grid = ESMF_GridCreateNoPeriDim(minIndex=(/1,1/), maxIndex=(/10,20/), &
      regDecomp=(/2,2/), name="atmgrid", rc=rc)
if (rc /= ESMF_SUCCESS) call ESMF_Finalize(endflag=ESMF_END_ABORT)

! create a Field from the Grid and arrayspec
field1 = ESMF_FieldCreate(grid, typekind=ESMF_TYPEKIND_R4, &
    indexflag=ESMF_INDEX_DELOCAL, &
    staggerloc=ESMF_STAGGERLOC_CENTER, name="pressure", rc=rc)
if (rc /= ESMF_SUCCESS) call ESMF_Finalize(endflag=ESMF_END_ABORT)

call ESMF_FieldGet(field1, localDe=0, farrayPtr=farray2dd, &
    totalLBound=ftlb, totalUBound=ftub, totalCount=ftc, rc=rc)

do i = ftlb(1), ftub(1)
    do j = ftlb(2), ftub(2)
        farray2dd(i, j) = sin(i/ftc(1)*PI) * cos(j/ftc(2)*PI)
    enddo
enddo

if (rc /= ESMF_SUCCESS) call ESMF_Finalize(endflag=ESMF_END_ABORT)
```

27.3.5 Create a Field with a Grid and Arrayspec

A user can create an `ESMF_Field` from an `ESMF_Grid` and a `ESMF_Arrayspec` with corresponding rank and type. This create method associates the two objects.

We first create a Grid with a regular distribution that is 10x20 index in 2x2 DEs. This version of Field create simply associates the data with the Grid. The data is referenced explicitly on a regular 2x2 uniform grid. Then we create an ArraySpec. Finally we create a Field from the Grid, ArraySpec, and a user specified StaggerLoc.

This example also illustrates a typical use of this Field creation method. By creating a Field from a Grid and an ArraySpec, the user allows the ESMF library to create a internal Array in the Field. Then the user can use `ESMF_FieldGet()` to retrieve the Fortran data array and necessary bounds information to assign initial values to it.

```
! create a grid
grid = ESMF_GridCreateNoPeriDim(minIndex=(/1,1/), maxIndex=(/10,20/), &
      regDecomp=(/2,2/), name="atmgrid", rc=rc)
if (rc /= ESMF_SUCCESS) call ESMF_Finalize(endflag=ESMF_END_ABORT)

! setup arrayspec
call ESMF_ArraySpecSet(arrayspec, 2, ESMF_TYPEKIND_R4, rc=rc)
if (rc /= ESMF_SUCCESS) call ESMF_Finalize(endflag=ESMF_END_ABORT)

! create a Field from the Grid and arrayspec
field1 = ESMF_FieldCreate(grid, arrayspec, &
     indexflag=ESMF_INDEX_DELOCAL, &
     staggerloc=ESMF_STAGGERLOC_CENTER, name="pressure", rc=rc)
if (rc /= ESMF_SUCCESS) call ESMF_Finalize(endflag=ESMF_END_ABORT)

call ESMF_FieldGet(field1, localDe=0, farrayPtr=farray2dd, &
    totalLBound=ftlb, totalUBound=ftub, totalCount=ftc, rc=rc)

do i = ftlb(1), ftub(1)
    do j = ftlb(2), ftub(2)
        farray2dd(i, j) = sin(i/ftc(1)*PI) * cos(j/ftc(2)*PI)
    enddo
enddo

if (rc /= ESMF_SUCCESS) call ESMF_Finalize(endflag=ESMF_END_ABORT)
```

A user can also create an ArraySpec that has a different rank from the Grid, For example, the following code shows creation of of 3D Field from a 2D Grid using a 3D ArraySpec.

This example also demonstrates the technique to create a typical 3D data Field that has 2 gridded dimensions and 1 ungridded dimension.

First we create a 2D grid with an index space of 180x360 equivalent to 180x360 Grid cells (note that for a distributed memory computer, this means each grid cell will be on a separate PE!). In the FieldCreate call, we use gridToFieldMap to indicate the mapping between Grid dimension and Field dimension. For the ungridded dimension (typically the altitude), we use ungriddedLBound and ungriddedUBound to describe its bounds. Internally the ungridded dimension has a stride of 1, so the number of elements of the ungridded dimension is ungriddedUBound - ungriddedLBound + 1.

Note that gridToFieldMap in this specific example is (/1,2/) which is the default value so the user can neglect this argument for the FieldCreate call.

```
grid2d = ESMF_GridCreateNoPeriDim(minIndex=(/1,1/), &
      maxIndex=(/180,360/), regDecomp=(/2,2/), name="atmgrid", rc=rc)
if (rc /= ESMF_SUCCESS) call ESMF_Finalize(endflag=ESMF_END_ABORT)

call ESMF_ArraySpecSet(arrayspec, 3, ESMF_TYPEKIND_R4, rc=rc)
if (rc /= ESMF_SUCCESS) call ESMF_Finalize(endflag=ESMF_END_ABORT)

field1 = ESMF_FieldCreate(grid2d, arrayspec, &
     indexflag=ESMF_INDEX_DELOCAL, &
     staggerloc=ESMF_STAGGERLOC_CENTER, &
     gridToFieldMap=(/1,2/), &
     ungriddedLBound=(/1/), ungriddedUBound=(/50/), &
     name="pressure", rc=rc)
if (rc /= ESMF_SUCCESS) call ESMF_Finalize(endflag=ESMF_END_ABORT)
```

27.3.6 Create a Field with a Grid and Array

A user can create an ESMF_Field from an ESMF_Grid and a ESMF_Array. The Grid was created in the previous example.

This example creates a 2D ESMF_Field from a 2D ESMF_Grid and a 2D ESMF_Array.

```
! Get necessary information from the Grid
call ESMF_GridGet(grid, staggerloc=ESMF_STAGGERLOC_CENTER, &
    distgrid=distgrid, rc=rc)
if (rc /= ESMF_SUCCESS) call ESMF_Finalize(endflag=ESMF_END_ABORT)

! Create a 2D ESMF_TYPEKIND_R4 arrayspec
call ESMF_ArraySpecSet(arrayspec, 2, ESMF_TYPEKIND_R4, rc=rc)
if (rc /= ESMF_SUCCESS) call ESMF_Finalize(endflag=ESMF_END_ABORT)

! Create a ESMF_Array from the arrayspec and distgrid
array2d = ESMF_ArrayCreate(arrayspec=arrayspec, &
        distgrid=distgrid, rc=rc)
if (rc /= ESMF_SUCCESS) call ESMF_Finalize(endflag=ESMF_END_ABORT)

! Create a ESMF_Field from the grid and array
field4 = ESMF_FieldCreate(grid, array2d, rc=rc)
if (rc /= ESMF_SUCCESS) call ESMF_Finalize(endflag=ESMF_END_ABORT)
```

27.3.7 Create an empty Field and complete it with FieldEmptySet and FieldEmptyComplete

A user can create an ESMF_Field in three steps: first create an empty ESMF_Field; then set a ESMF_Grid on the empty ESMF_Field; and finally complete the ESMF_Field by calling ESMF_FieldEmptyComplete.

```
! create an empty Field
field3 = ESMF_FieldEmptyCreate(name="precip", rc=rc)

! use FieldGet to retrieve the Field Status
call ESMF_FieldGet(field3, status=fstatus, rc=rc)
```

Once the Field is created, we can verify that the status of the Field is ESMF_FIELDSTATUS_EMPTY.

```
! Test the status of the Field
if (fstatus /= ESMF_FIELDSTATUS_EMPTY) then
     call ESMF_Finalize(endflag=ESMF_END_ABORT)
endif
```

Next we set a Grid on the empty Field. We use the 2D grid created in a previous example simply to demonstrate the method. The Field data points will be on east edge of the Grid cells with the specified ESMF_STAGGERLOC_EDGE1.

```
! Set a grid on the Field
call ESMF_FieldEmptySet(field3, grid2d, &
         staggerloc=ESMF_STAGGERLOC_EDGE1, rc=rc)

! use FieldGet to retrieve the Field Status again
call ESMF_FieldGet(field3, status=fstatus, rc=rc)
```

```
! Test the status of the Field
if (fstatus /= ESMF_FIELDSTATUS_GRIDSET) then
     call ESMF_Finalize(endflag=ESMF_END_ABORT)
endif
```

The partially created Field is completed by specifying the typekind of its data storage. This method is overloaded with one of the following parameters, arrayspec, typekind, Fortran array, or Fortran array pointer. Additional optional arguments can be used to specify ungridded dimensions and halo regions similar to the other Field creation methods.

```
! Complete the Field by specifying the data typekind
! to be allocated internally.
call ESMF_FieldEmptyComplete(field3, typekind=ESMF_TYPEKIND_R8, &
  ungriddedLBound=(/1/), ungriddedUBound=(/5/), rc=rc)

! use FieldGet to retrieve the Field Status again
call ESMF_FieldGet(field3, status=fstatus, rc=rc)

! Test the status of the Field
if (fstatus /= ESMF_FIELDSTATUS_COMPLETE) then
     call ESMF_Finalize(endflag=ESMF_END_ABORT)
endif
```

27.3.8 Create an empty Field and complete it with FieldEmptyComplete

A user can create an empty `ESMF_Field`. Then the user can finalize the empty `ESMF_Field` from a `ESMF_Grid` and an intrinsic Fortran data array. This interface is overloaded for typekind and rank of the Fortran data array.

In this example, both the grid and the Fortran array pointer are 2 dimensional and each dimension of the grid is mapped to the corresponding dimension of the Fortran array pointer, i.e. 1st dimension of grid maps to 1st dimension of Fortran array pointer, 2nd dimension of grid maps to 2nd dimension of Fortran array pointer, so on and so forth.

In order to create or complete a Field from a Grid and a Fortran array pointer, certain rules of the Fortran array bounds must be obeyed. We will discuss these rules as we progress in Field creation examples. We will make frequent reference to the terminologies for bounds and widths in ESMF. For a better discussion of these terminologies and concepts behind them, e.g. exclusive, computational, total bounds for the lower and upper corner of data region, etc.., users can refer to the explanation of these concepts for Grid and Array in their respective sections in the *Reference Manual*, e.g. Section 29.2.6 on Array and Section 32.3.19 on Grid. The examples here are designed to help a user to get up to speed with creating Fields for typical use.

This example introduces a helper method, the `ESMF_GridGetFieldBounds` interface that facilitates the computation of Fortran data array bounds and shape to assist `ESMF_FieldEmptyComplete` finalizing a Field from an intrinsic Fortran data array and a Grid.

```
! create an empty Field
field3 = ESMF_FieldEmptyCreate(name="precip", rc=rc)
if (rc /= ESMF_SUCCESS) call ESMF_Finalize(endflag=ESMF_END_ABORT)

! use FieldGet to retrieve total counts
call ESMF_GridGetFieldBounds(grid2d, localDe=0, &
    staggerloc=ESMF_STAGGERLOC_CENTER, totalCount=ftc, rc=rc)
if (rc /= ESMF_SUCCESS) call ESMF_Finalize(endflag=ESMF_END_ABORT)

! allocate the 2d Fortran array based on retrieved total counts
```

```
allocate(farray2d(ftc(1), ftc(2)))

! finalize the Field
call ESMF_FieldEmptyComplete(field3, grid2d, farray2d, rc=rc)
```

27.3.9 Create a 7D Field with a 5D Grid and 2D ungridded bounds from a Fortran data array

In this example, we will show how to create a 7D Field from a 5D `ESMF_Grid` and 2D ungridded bounds with arbitrary halo widths and gridToFieldMap.

We first create a 5D DistGrid and a 5D Grid based on the DistGrid; then `ESMF_GridGetFieldBounds` computes the shape of a 7D array in fsize. We can then create a 7D Field from the 5D Grid and the 7D Fortran data array with other assimilating parameters.

```
! create a 5d distgrid
distgrid5d = ESMF_DistGridCreate(minIndex=(/1,1,1,1,1/), &
    maxIndex=(/10,4,10,4,6/), regDecomp=(/2,1,2,1,1/), rc=rc)
if (rc /= ESMF_SUCCESS) call ESMF_Finalize(endflag=ESMF_END_ABORT)

! Create a 5d Grid
grid5d = ESMF_GridCreate(distgrid=distgrid5d, name="grid", rc=rc)
if (rc /= ESMF_SUCCESS) call ESMF_Finalize(endflag=ESMF_END_ABORT)

! use FieldGet to retrieve total counts
call ESMF_GridGetFieldBounds(grid5d, localDe=0, ungriddedLBound=(/1,2/), &
    ungriddedUBound=(/4,5/), &
    totalLWidth=(/1,1,1,2,2/), totalUWidth=(/1,2,3,4,5/), &
    gridToFieldMap=(/3,2,5,4,1/), &
    totalCount=fsize, &
    rc=rc)
if (rc /= ESMF_SUCCESS) call ESMF_Finalize(endflag=ESMF_END_ABORT)

! allocate the 7d Fortran array based on retrieved total counts
allocate(farray7d(fsize(1), fsize(2), fsize(3), fsize(4), fsize(5), &
                  fsize(6), fsize(7)))

! create the Field
field7d = ESMF_FieldCreate(grid5d, farray7d, ESMF_INDEX_DELOCAL, &
    ungriddedLBound=(/1,2/), ungriddedUBound=(/4,5/), &
    totalLWidth=(/1,1,1,2,2/), totalUWidth=(/1,2,3,4,5/), &
    gridToFieldMap=(/3,2,5,4,1/), &
    rc=rc)
if (rc /= ESMF_SUCCESS) call ESMF_Finalize(endflag=ESMF_END_ABORT)
```

A user can allocate the Fortran array in a different manner using the lower and upper bounds returned from FieldGet through the optional totalLBound and totalUBound arguments. In the following example, we create another 7D Field by retrieving the bounds and allocate the Fortran array with this approach. In this scheme, indexing the Fortran array is sometimes more convenient than using the shape directly.

```
call ESMF_GridGetFieldBounds(grid5d, localDe=0, ungriddedLBound=(/1,2/), &
    ungriddedUBound=(/4,5/), &
    totalLWidth=(/1,1,1,2,2/), totalUWidth=(/1,2,3,4,5/), &
    gridToFieldMap=(/3,2,5,4,1/), &
    totalLBound=flbound, totalUBound=fubound, &
```

```
    rc=rc)
if (rc /= ESMF_SUCCESS) call ESMF_Finalize(endflag=ESMF_END_ABORT)

allocate(farray7d2(flbound(1):fubound(1), flbound(2):fubound(2), &
                   flbound(3):fubound(3), flbound(4):fubound(4), &
                   flbound(5):fubound(5), flbound(6):fubound(6), &
                   flbound(7):fubound(7)) )

field7d2 = ESMF_FieldCreate(grid5d, farray7d2, ESMF_INDEX_DELOCAL, &
    ungriddedLBound=(/1,2/), ungriddedUBound=(/4,5/), &
    totalLWidth=(/1,1,1,2,2/), totalUWidth=(/1,2,3,4,5/), &
    gridToFieldMap=(/3,2,5,4,1/), &
    rc=rc)
if (rc /= ESMF_SUCCESS) call ESMF_Finalize(endflag=ESMF_END_ABORT)
```

27.3.10 Shared memory features: DE pinning, sharing, and migration

See 29.2.13 for a introduction of the DE pinning feature. Here we focus on demonstrating the use of the DE pinning feature in the context of ESMF Field.

When an ESMF Field object is created, the specified underlying DistGrid indicates how many Decomposition Elements (DEs) are created. Each DE has its own memory allocation to hold user data. The DELayout, referenced by the DistGrid, determines which PET is considered the *owner* of each of the DEs. Queried for the local DEs, the Field object returns the list of DEs that are owned by the local PET making the query.

By default DEs are *pinned* to the PETs under which they were created. The memory allocation associated with a specific DE is only defined in the VAS of the PET to which the DE is pinned. As a consequence, only the PET owning a DE has access to its memory allocation.

On shared memory systems, however, ESMF allows DEs to be pinned to SSIs instead of PETs. In this case the PET under which a DE was created is still consider the owner, but now *all* PETs under the same SSI have access to the DE. For this the memory allocation associated with the DE is mapped into the VAS of all the PETs under the SSI.

To create an Field with each DE pinned to SSI instead of PET, first query the VM for the available level of support.

```
call ESMF_VMGet(vm, ssiSharedMemoryEnabledFlag=ssiSharedMemoryEnabled, rc=rc)

if (ssiSharedMemoryEnabled) then
```

Knowing that the SSI shared memory feature is available, it is now possible to create an Field object with DE to SSI pinning.

```
grid = ESMF_GridCreateNoPeriDim(maxIndex=(/40,10/), regDecomp=(/4,1/), &
  coordSys = ESMF_COORDSYS_CART, &
  rc=rc)

field = ESMF_FieldCreate(typekind=ESMF_TYPEKIND_R8, grid=grid, &
  pinflag=ESMF_PIN_DE_TO_SSI, rc=rc)
```

Just as in the cases discussed before, where the same Grid was used, a default DELayout with as many DEs as PETs in the VM is constructed. Setting the `pinflag` to `ESMF_PIN_DE_TO_SSI` does not change the fact that each PET owns exactly one of the DEs. However, assuming that this code is run on a set of PETs that are all located under the same SSI, every PET now has *access* to all of the DEs. The situation can be observed by querying for both the `localDeCount`, and the `ssiLocalDeCount`.

```
call ESMF_FieldGet(field, localDeCount=localDeCount, &
  ssiLocalDeCount=ssiLocalDeCount, rc=rc)
```

Assuming execution on 4 PETs, all located on the same SSI, the values of the returned variable are `localDeCount==1` and `ssiLocalDeCount==4` on all of the PETs. The mapping between each PET's local DE, and the global DE index is provided through the `localDeToDeMap` array argument. The amount of mapping information returned is dependent on how large `localDeToDeMap` has been sized by the user. For `size(localDeToDeMap)==localDeCount`, only mapping information for those DEs *owned* by the local PET is filled in. However for `size(localDeToDeMap)==ssiLocalDeCount`, mapping information for all locally *accessible* DEs is returned, including those owned by other PETs on the same SSI.

```
allocate(localDeToDeMap(0:ssiLocalDeCount-1))
call ESMF_FieldGet(field, localDeToDeMap=localDeToDeMap, rc=rc)
```

The first `localDeCount` entries of `localDeToDeMap` are always the global DE indices of the DEs *owned* by the local PET. The remaining `ssiLocalDeCount-localDeCount` entries are the global DE indices of DEs *shared* by other PETs. The ordering of the shared DEs is from smallest to greatest, excluding the locally owned DEs, which were already listed at the beginning of `localDeToDeMap`. For the current case, again assuming execution on 4 PETs all located on the same SSI, we expect the following situation:

PET 0: `localDeToDeMap==(/0,1,2,3/)`
PET 1: `localDeToDeMap==(/1,0,2,3/)`
PET 2: `localDeToDeMap==(/2,0,1,3/)`
PET 3: `localDeToDeMap==(/3,0,1,2/)`

Each PET can access the memory allocations associated with *all* of the DEs listed in the `localDeToDeMap` returned by the Field object. Direct access to the Fortran array pointer of a specific memory allocation is available through `ESMF_FieldGet()`. Here each PET queries for the `farrayPtr` of `localDe==2`, i.e. the 2nd shared DE.

```
call ESMF_FieldGet(field, farrayPtr=myFarray, localDe=2, rc=rc)
```

Now variable `myFarray` on PETs 0 and 1 both point to the *same* memory allocation for global DE 2. Both PETs have access to the same piece of shared memory! The same is true for PETs 2 and 3, pointing to the shared memory allocation of global DE 1.

It is important to note that all of the typical considerations surrounding shared memory programming apply when accessing shared DEs! Proper synchronization between PETs accessing shared DEs is critical to avoid *race conditions*. Also performance issues like *false sharing* need to be considered for optimal use.

For a simple demonstration, PETs 0 and 2 fill the entire memory allocation of DE 2 and 1, respectively, to a unique value.

```
if (localPet==0) then
  myFarray = 12345.6789d0
else if (localPet==2) then
  myFarray = 6789.12345d0
endif
```

Here synchronization is needed before any PETs that share access to the same DEs can safely access the data without race condition. The Field class provides a simple synchronization method that can be used.

```
call ESMF_FieldSync(field, rc=rc) ! prevent race condition
```

Now it is safe for PETs 1 and 3 to access the shared DEs. We expect to find the data that was set above. For simplicity of the code only the first array element is inspected here.

```
    if (localPet==1) then
      if (abs(myFarray(1,1)-12345.6789d0)>1.d10) print *, "bad data detected"
    else if (localPet==3) then
      if (abs(myFarray(1,1)-6789.12345d0)>1.d10) print *, "bad data detected"
    endif

  endif ! ending the ssiSharedMemoryEnabled conditional
```

27.3.11 Create a 2D Field with a 2D Grid and a Fortran data array

A user can create an `ESMF_Field` directly from an `ESMF_Grid` and an intrinsic Fortran data array. This interface is overloaded for typekind and rank of the Fortran data array.

In the following example, each dimension size of the Fortran array is equal to the exclusive bounds of its corresponding Grid dimension queried from the Grid through `ESMF_GridGet()` public interface.

Formally let fa_shape(i) be the shape of i-th dimension of user supplied Fortran array, then rule 1 states:

```
    (1) fa_shape(i) = exclusiveCount(i)
                  i = 1...GridDimCount
```

fa_shape(i) defines the shape of i-th dimension of the Fortran array. ExclusiveCount are the number of data elements of i-th dimension in the exclusive region queried from `ESMF_GridGet` interface. *Rule 1 assumes that the Grid and the Fortran intrinsic array have same number of dimensions; and optional arguments of FieldCreate from Fortran array are left unspecified using default setup*. These assumptions are true for most typical uses of FieldCreate from Fortran data array. This is the easiest way to create a Field from a Grid and a Fortran intrinsic data array.

Fortran array dimension sizes (called shape in most Fortran language books) are equivalent to the bounds and counts used in this manual. The following equation holds:

```
    fa_shape(i) = shape(i) = counts(i) = upper_bound(i) - lower_bound(i) + 1
```

These typically mean the same concept unless specifically explained to mean something else. For example, ESMF uses DimCount very often to mean number of dimensions instead of its meaning implied in the above equation. We'll clarify the meaning of a word when ambiguity could occur.

Rule 1 is most useful for a user working with Field creation from a Grid and a Fortran data array in most scenarios. It extends to higher dimension count, 3D, 4D, etc... Typically, as the code example demonstrates, a user first creates a Grid, then uses `ESMF_GridGet()` to retrieve the exclusive counts. Next the user calculates the shape of each Fortran array dimension according to rule 1. The Fortran data array is allocated and initialized based on the computed shape. A Field can either be created in one shot or created empty and finished using `ESMF_FieldEmptyComplete`.

There are important details that can be skipped but are good to know for `ESMF_FieldEmptyComplete` and `ESMF_FieldCreate` from a Fortran data array. 1) these methods require *each PET contains exactly one DE*.

This implies that a code using FieldCreate from a data array or FieldEmptyComplete must have the same number of DEs and PETs, formally $n_{DE} = n_{PET}$. Violation of this condition will cause run time failures. 2) the bounds and counts retrieved from GridGet are DE specific or equivalently PET specific, which means that *the Fortran array shape could be different from one PET to another*.

```
grid = ESMF_GridCreateNoPeriDim(minIndex=(/1,1/), maxIndex=(/10,20/), &
      regDecomp=(/2,2/), name="atmgrid", rc=rc)
if (rc /= ESMF_SUCCESS) call ESMF_Finalize(endflag=ESMF_END_ABORT)

call ESMF_GridGet(grid, localDE=0, staggerloc=ESMF_STAGGERLOC_CENTER, &
    exclusiveCount=gec, rc=rc)
if (rc /= ESMF_SUCCESS) call ESMF_Finalize(endflag=ESMF_END_ABORT)

allocate(farray(gec(1), gec(2)) )

field = ESMF_FieldCreate(grid, farray, ESMF_INDEX_DELOCAL, rc=rc)
if (rc /= ESMF_SUCCESS) call ESMF_Finalize(endflag=ESMF_END_ABORT)
```

27.3.12 Create a 2D Field with a 2D Grid and a Fortran data pointer

The setup of this example is similar to the previous section except that the Field is created from a data pointer instead of a data array. We highlight the ability to deallocate the internal Fortran data pointer queried from the Field. This gives a user more flexibility with memory management.

```
allocate(farrayPtr(gec(1), gec(2)) )

field = ESMF_FieldCreate(grid, farrayPtr, rc=rc)
if (rc /= ESMF_SUCCESS) call ESMF_Finalize(endflag=ESMF_END_ABORT)
call ESMF_FieldGet(field, farrayPtr=farrayPtr2, rc=rc)
if (rc /= ESMF_SUCCESS) call ESMF_Finalize(endflag=ESMF_END_ABORT)
! deallocate the retrieved Fortran array pointer
deallocate(farrayPtr2)
```

27.3.13 Create a 3D Field with a 2D Grid and a 3D Fortran data array

This example demonstrates a typical use of `ESMF_Field` combining a 2D grid and a 3D Fortran native data array. One immediate problem follows: how does one define the bounds of the ungridded dimension? This is solved by the optional arguments `ungriddedLBound` and `ungriddedUBound` of the `ESMF_FieldCreate` interface. By definition, `ungriddedLBound` and `ungriddedUBound` are both 1 dimensional integer Fortran arrays.

Formally, let fa_shape(j=1...FieldDimCount-GridDimCount) be the shape of the ungridded dimensions of a Field relative to the Grid used in Field creation. The Field dimension count is equal to the number of dimensions of the Fortran array, which equals the number of dimensions of the resultant Field. GridDimCount is the number of dimensions of the Grid.

fa_shape(j) is computed as:

```
fa_shape(j) = ungriddedUBound(j) - ungriddedLBound(j) + 1
```

fa_shape is easy to compute when the gridded and ungridded dimensions do not mix. However, it's conceivable that at higher dimension count, gridded and ungridded dimensions can interleave. To aid the computation of ungridded dimension shape we formally introduce the mapping concept.

Let $map_{A,B}(i = 1...n_A) = i_B$, and $i_B \in [\phi, 1...n_B]$. n_A is the number of elements in set A, n_B is the number of elements in set B. $map_{A,B}(i)$ defines a mapping from i-th element of set A to i_B-th element in set B. $i_B = \phi$ indicates there does not exist a mapping from i-th element of set A to set B.

Suppose we have a mapping from dimension index of ungriddedLBound (or ungriddedUBound) to Fortran array dimension index, called ugb2fa. By definition, n_A equals to the dimension count of ungriddedLBound (or ungriddedUBound), n_B equals to the dimension count of the Fortran array. We can now formulate the computation of ungridded dimension shape as rule 2:

```
(2) fa_shape(ugb2fa(j)) = ungriddedUBound(j) - ungriddedLBound(j) + 1
                      j = 1..FortranArrayDimCount - GridDimCount
```

The mapping can be computed in linear time proportional to the Fortran array dimension count (or rank) using the following algorithm in pseudocode:

```
map_index = 1
do i = 1, farray_rank
    if i-th dimension of farray is ungridded
        ugb2fa(map_index) = i
        map_index = map_index + 1
    endif
enddo
```

Here we use rank and dimension count interchangeably. These 2 terminologies are typically equivalent. But there are subtle differences under certain conditions. Rank is the total number of dimensions of a tensor object. Dimension count allows a finer description of the heterogeneous dimensions in that object. For example, a Field of rank 5 can have 3 gridded dimensions and 2 ungridded dimensions. Rank is precisely the summation of dimension count of all types of dimensions.

For example, if a 5D array is used with a 3D Grid, there are 2 ungridded dimensions: ungriddedLBound=(/1,2/) and ungriddedUBound=(/5,7/). Suppose the distribution of dimensions looks like (O, X, O, X, O), O means gridded, X means ungridded. Then the mapping from ungridded bounds to Fortran array is ugb2fa=(/2, 4/). The shape of 2nd and 4th dimension of Fortran array should equal (5, 8).

Back to our 3D Field created from a 2D Grid and 3D Fortran array example, suppose the 3rd Field dimension is ungridded, ungriddedLBound=(/3/), ungriddedUBound=(/9/). First we use rule 1 to compute shapes of the gridded Fortran array dimension, then we use rule 2 to compute shapes of the ungridded Fortran array dimension. In this example, we used the exclusive bounds obtained in the previous example.

```
fa_shape(1) = gec(1) ! rule 1
fa_shape(2) = gec(2)
fa_shape(3) = 7 ! rule 2 9-3+1
allocate(farray3d(fa_shape(1), fa_shape(2), fa_shape(3)))
field = ESMF_FieldCreate(grid, farray3d, ESMF_INDEX_DELOCAL, &
    ungriddedLBound=(/3/), ungriddedUBound=(/9/), &
    rc=rc)
if (rc /= ESMF_SUCCESS) call ESMF_Finalize(endflag=ESMF_END_ABORT)
```

27.3.14 Create a 3D Field with a 2D Grid and a 3D Fortran data array with gridToFieldMap argument

Building upon the previous example, we will create a 3D Field from a 2D grid and 3D array but with a slight twist. In this example, we introduce the gridToFieldMap argument that allows a user to map Grid dimension index to Field dimension index.

In this example, both dimensions of the Grid are distributed and the mapping from DistGrid to Grid is (/1,2/). We will introduce rule 3 assuming distgridToGridMap=(/1,2,3...gridDimCount/), and distgridDimCount equals to gridDimCount. This is a reasonable assumption in typical Field use.

We apply the mapping gridToFieldMap on rule 1 to create rule 3:

```
(3) fa_shape(gridToFieldMap(i)) = exclusiveCount(i)
                              i = 1,..GridDimCount.
```

Back to our example, suppose the 2nd Field dimension is ungridded, ungriddedLBound=(/3/), ungriddedUBound=(/9/). gridToFieldMap=(/3,1/), meaning the 1st Grid dimension maps to 3rd Field dimension, and 2nd Grid dimension maps to 1st Field dimension.

First we use rule 3 to compute shapes of the gridded Fortran array dimension, then we use rule 2 to compute shapes of the ungridded Fortran array dimension. In this example, we use the exclusive bounds obtained in the previous example.

```
gridToFieldMap2d(1) = 3
gridToFieldMap2d(2) = 1
do i = 1, 2
    fa_shape(gridToFieldMap2d(i)) = gec(i)
end do
fa_shape(2) = 7
allocate(farray3d(fa_shape(1), fa_shape(2), fa_shape(3)))
field = ESMF_FieldCreate(grid, farray3d, ESMF_INDEX_DELOCAL, &
    ungriddedLBound=(/3/), ungriddedUBound=(/9/), &
    gridToFieldMap=gridToFieldMap2d, &
    rc=rc)
if (rc /= ESMF_SUCCESS) call ESMF_Finalize(endflag=ESMF_END_ABORT)
```

27.3.15 Create a 3D Field with a 2D Grid and a 3D Fortran data array with halos

This example is similar to example 27.3.14. In addition, here we will show how a user can associate different halo widths to a Fortran array to create a Field through the totalLWidth and totalUWidth optional arguments. A diagram of the dimension configuration from Grid, halos, and Fortran data array is shown here.

The `ESMF_FieldCreate()` interface supports creating a Field from a Grid and a Fortran array padded with halos on the distributed dimensions of the Fortran array. Using this technique one can avoid passing non-contiguous Fortran array slice to FieldCreate. It guarantees the same exclusive region, and by using halos, it also defines a bigger total region to contain the entire contiguous memory block of the Fortran array.

The elements of totalLWidth and totalUWidth are applied in the order distributed dimensions appear in the Fortran array. By definition, totalLWidth and totalUWidth are 1 dimensional arrays of non-negative integer values. The size

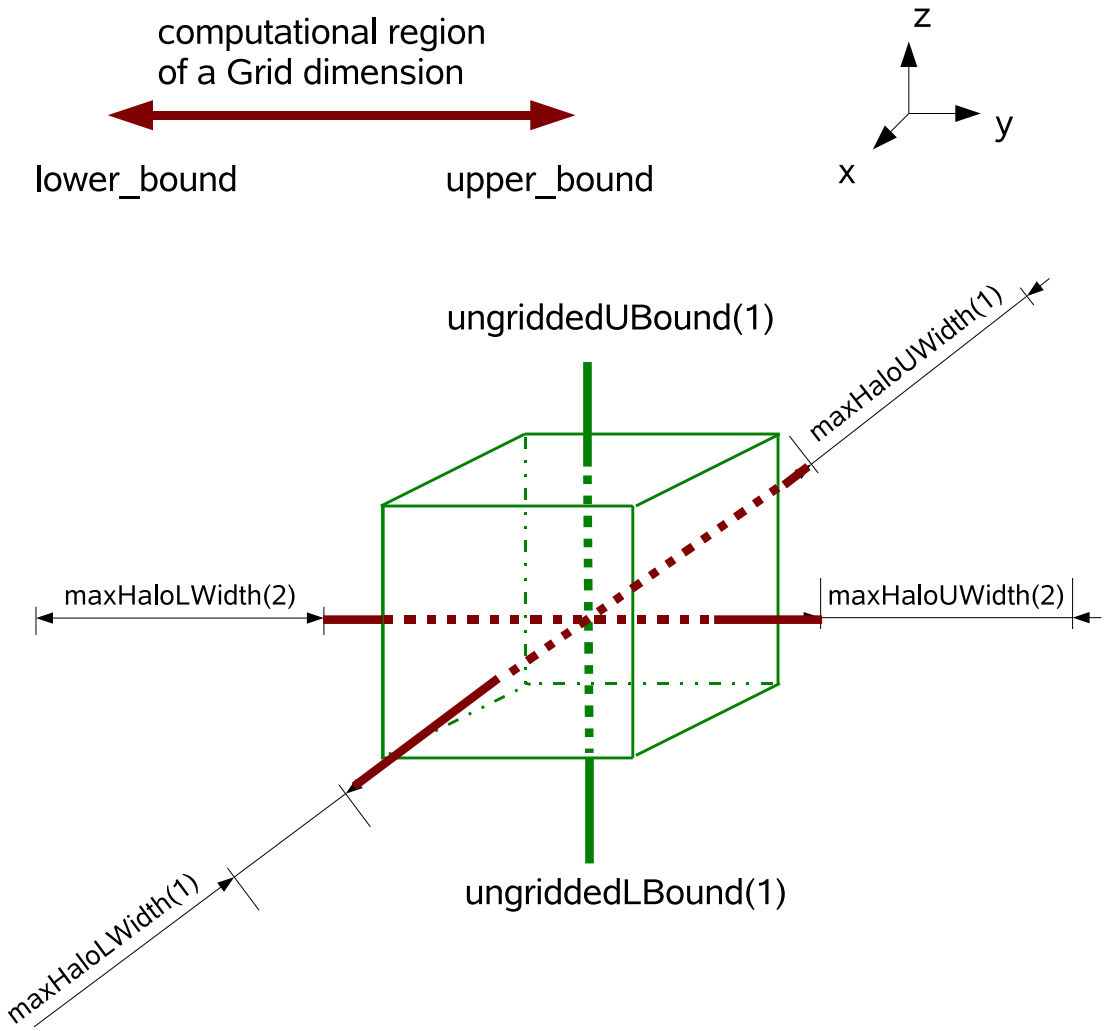

ESMF_Field created from a 2D ESMF_Grid (Red) and a 3D Intrinsic Fortran data array (Green). The ungridded bounds and halo widths are applied to corresponding dimensions.

Figure 12: Field dimension configuration from Grid, halos, and Fortran data array.

of haloWidth arrays is equal to the number of distributed dimensions of the Fortran array, which is also equal to the number of distributed dimensions of the Grid used in the Field creation.

Because the order of totalWidth (representing both totalLWidth and totalUWidth) element is applied to the order distributed dimensions appear in the Fortran array dimensions, it's quite simple to compute the shape of distributed dimensions of the Fortran array. They are done in a similar manner when applying ungriddedLBound and ungriddedUBound to ungridded dimensions of the Fortran array defined by rule 2.

Assume we have the mapping from the dimension index of totalWidth to the dimension index of Fortran array, called mhw2fa; and we also have the mapping from dimension index of Fortran array to dimension index of the Grid, called fa2g. The shape of distributed dimensions of a Fortran array can be computed by rule 4:

```
(4) fa_shape(mhw2fa(k)) = exclusiveCount(fa2g(mhw2fa(k)) +
                          totalUWidth(k) + totalLWidth(k)
                      k = 1...size(totalWidth)
```

This rule may seem confusing but algorithmically the computation can be done by the following pseudocode:

```
fa_index = 1
do i = 1, farray_rank
   if i-th dimension of Fortran array is distributed
       fa_shape(i) = exclusiveCount(fa2g(i)) +
                     totalUWidth(fa_index) + totalLWidth(fa_index)
       fa_index = fa_index + 1
   endif
enddo
```

The only complication then is to figure out the mapping from Fortran array dimension index to Grid dimension index. This process can be done by computing the reverse mapping from Field to Grid.

Typically, we don't have to consider these complications if the following conditions are met: 1) All Grid dimensions are distributed. 2) DistGrid in the Grid has a dimension index mapping to the Grid in the form of natural order (/1,2,3,.../). This natural order mapping is the default mapping between various objects throughout ESMF. 3) Grid to Field mapping is in the form of natural order, i.e. default mapping. These seem like a lot of conditions but they are the default case in the interaction among DistGrid, Grid, and Field. When these conditions are met, which is typically true, the shape of distributed dimensions of Fortran array follows rule 5 in a simple form:

```
(5) fa_shape(k) = exclusiveCount(k) +
                  totalUWidth(k) + totalLWidth(k)
              k = 1...size(totalWidth)
```

Let's examine an example on how to apply rule 5. Suppose we have a 5D array and a 3D Grid that has its first 3 dimensions mapped to the first 3 dimensions of the Fortran array. totalLWidth=(/1,2,3/), totalUWidth=(/7,9,10/), then by rule 5, the following pseudo code can be used to compute the shape of the first 3 dimensions of the Fortran array. The shape of the remaining two ungridded dimensions can be computed according to rule 2.

```
do k = 1, 3
    fa_shape(k) = exclusiveCount(k) +
                  totalUWidth(k) + totalLWidth(k))
enddo
```

Suppose now gridToFieldMap=(/2,3,4/) instead which says the first dimension of Grid maps to the 2nd dimension of Field (or Fortran array) and so on and so forth, we can obtain a more general form of rule 5 by introducing first_distdim_index shift when Grid to Field map (gridToFieldMap) is in the form of (/a,a+1,a+2.../).

```
(6) fa_shape(k+first_distdim_index-1) = exclusiveCount(k) +
                                        totalUWidth(k) + totalLWidth(k)
                                    k = 1...size(totalWidth)
```

It's obvious that first_distdim_index=a. If the first dimension of the Fortran array is distributed, then rule 6 degenerates into rule 5, which is the typical case.

Back to our example creating a 3D Field from a 2D Grid and a 3D intrinsic Fortran array, we will use the Grid created from previous example that satisfies condition 1 and 2. We'll also use a simple gridToFieldMap (1,2) which is the default mapping that satisfies condition 3. First we use rule 5 to compute the shape of distributed dimensions then we use rule 2 to compute the shape of the ungridded dimensions.

```
gridToFieldMap2d(1) = 1
gridToFieldMap2d(2) = 2
totalLWidth2d(1) = 3
totalLWidth2d(2) = 4
totalUWidth2d(1) = 3
totalUWidth2d(2) = 5
do k = 1, 2
    fa_shape(k) = gec(k) + totalLWidth2d(k) + totalUWidth2d(k)
end do
fa_shape(3) = 7          ! 9-3+1
allocate(farray3d(fa_shape(1), fa_shape(2), fa_shape(3)))
field = ESMF_FieldCreate(grid, farray3d, ESMF_INDEX_DELOCAL, &
    ungriddedLBound=(/3/), ungriddedUBound=(/9/), &
    totalLWidth=totalLWidth2d, totalUWidth=totalUWidth2d, &
    gridToFieldMap=gridToFieldMap2d, &
    rc=rc)
if (rc /= ESMF_SUCCESS) call ESMF_Finalize(endflag=ESMF_END_ABORT)
```

27.3.16 Create a Field from a LocStream, typekind, and rank

In this example, an `ESMF_Field` is created from an `ESMF_LocStream` and typekind/rank. The location stream object is uniformly distributed in a 1 dimensional space on 4 DEs. The rank is 1 dimensional. Please refer to LocStream examples section for more information on LocStream creation.

```
locs = ESMF_LocStreamCreate(minIndex=1, maxIndex=16, rc=rc)
```

```
if (rc /= ESMF_SUCCESS) call ESMF_Finalize(endflag=ESMF_END_ABORT)

field = ESMF_FieldCreate(locs, typekind=ESMF_TYPEKIND_I4, &
    rc=rc)
if (rc /= ESMF_SUCCESS) call ESMF_Finalize(endflag=ESMF_END_ABORT)
```

27.3.17 Create a Field from a LocStream and arrayspec

In this example, an `ESMF_Field` is created from an `ESMF_LocStream` and an `ESMF_Arrayspec`. The location stream object is uniformly distributed in a 1 dimensional space on 4 DEs. The arrayspec is 1 dimensional. Please refer to LocStream examples section for more information on LocStream creation.

```
locs = ESMF_LocStreamCreate(minIndex=1, maxIndex=16, rc=rc)
if (rc /= ESMF_SUCCESS) call ESMF_Finalize(endflag=ESMF_END_ABORT)

call ESMF_ArraySpecSet(arrayspec, 1, ESMF_TYPEKIND_I4, rc=rc)
if (rc /= ESMF_SUCCESS) call ESMF_Finalize(endflag=ESMF_END_ABORT)

field = ESMF_FieldCreate(locs, arrayspec, &
    rc=rc)
if (rc /= ESMF_SUCCESS) call ESMF_Finalize(endflag=ESMF_END_ABORT)
```

27.3.18 Create a Field from a Mesh, typekind, and rank

In this example, an `ESMF_Field` is created from an `ESMF_Mesh` and typekind/rank. The mesh object is on a Euclidean surface that is partitioned to a 2x2 rectangular space with 4 elements and 9 nodes. The nodal space is represented by a distgrid with 9 indices. A Field is created on locally owned nodes on each PET. Therefore, the created Field has 9 data points globally. The mesh object can be represented by the picture below. For more information on Mesh creation, please see Section 34.3.1.

```
             Mesh Ids

2.0   7 ------- 8 -------- 9
      |         |          |
      |    3    |    4     |
      |         |          |
1.0   4 ------- 5 -------- 6
      |         |          |
      |    1    |    2     |
      |         |          |
0.0   1 ------- 2 -------- 3

     0.0       1.0        2.0

    Node Ids at corners
    Element Ids in centers


            Mesh Owners
```

```
2.0   2 ------- 2 -------- 3
      |         |          |
      |    2    |    3     |
      |         |          |
1.0   0 ------- 0 -------- 1
      |         |          |
      |    0    |    1     |
      |         |          |
0.0   0 ------- 0 -------- 1

     0.0       1.0        2.0

    Node Owners at corners
    Element Owners in centers
```

```
! Create Mesh structure in 1 step
mesh=ESMF_MeshCreate(parametricDim=2,spatialDim=2, &
       nodeIds=nodeIds, nodeCoords=nodeCoords, &
       nodeOwners=nodeOwners, elementIds=elemIds,&
       elementTypes=elemTypes, elementConn=elemConn, &
       rc=rc)
if (rc /= ESMF_SUCCESS) call ESMF_Finalize(endflag=ESMF_END_ABORT)

! Field is created on the 1 dimensional nodal distgrid. On
! each PET, Field is created on the locally owned nodes.
field = ESMF_FieldCreate(mesh, typekind=ESMF_TYPEKIND_I4, rc=rc)
if (rc /= ESMF_SUCCESS) call ESMF_Finalize(endflag=ESMF_END_ABORT)
```

27.3.19 Create a Field from a Mesh and arrayspec

In this example, an `ESMF_Field` is created from an `ESMF_Mesh` and an `ESMF_Arrayspec`. The mesh object is on a Euclidean surface that is partitioned to a 2x2 rectangular space with 4 elements and 9 nodes. The nodal space is represented by a distgrid with 9 indices. Field is created on locally owned nodes on each PET. Therefore, the created Field has 9 data points globally. The mesh object can be represented by the picture below. For more information on Mesh creation, please see Section 34.3.1.

```
! Create Mesh structure in 1 step
mesh=ESMF_MeshCreate(parametricDim=2,spatialDim=2, &
       nodeIds=nodeIds, nodeCoords=nodeCoords, &
       nodeOwners=nodeOwners, elementIds=elemIds,&
       elementTypes=elemTypes, elementConn=elemConn, &
       rc=rc)
if (rc /= ESMF_SUCCESS) call ESMF_Finalize(endflag=ESMF_END_ABORT)

call ESMF_ArraySpecSet(arrayspec, 1, ESMF_TYPEKIND_I4, rc=rc)
if (rc /= ESMF_SUCCESS) call ESMF_Finalize(endflag=ESMF_END_ABORT)

! Field is created on the 1 dimensional nodal distgrid. On
! each PET, Field is created on the locally owned nodes.
field = ESMF_FieldCreate(mesh, arrayspec, rc=rc)
if (rc /= ESMF_SUCCESS) call ESMF_Finalize(endflag=ESMF_END_ABORT)
```

27.3.20 Create a Field from a Mesh and an Array

In this example, an `ESMF_Field` is created from an `ESMF_Mesh` and an `ESMF_Array`. The mesh object is created in the previous example and the array object is retrieved from the field created in the previous example too.

```
call ESMF_MeshGet(mesh, nodalDistgrid=distgrid, rc=rc)
if (rc /= ESMF_SUCCESS) call ESMF_Finalize(endflag=ESMF_END_ABORT)
array = ESMF_ArrayCreate(distgrid=distgrid, arrayspec=arrayspec, rc=rc)
if (rc /= ESMF_SUCCESS) call ESMF_Finalize(endflag=ESMF_END_ABORT)
! query the array from the previous example
call ESMF_FieldGet(field, array=array, rc=rc)
if (rc /= ESMF_SUCCESS) call ESMF_Finalize(endflag=ESMF_END_ABORT)
! create a Field from a mesh and an array
field1 = ESMF_FieldCreate(mesh, array, rc=rc)
if (rc /= ESMF_SUCCESS) call ESMF_Finalize(endflag=ESMF_END_ABORT)
```

27.3.21 Create a Field from a Mesh and an ArraySpec with optional features

In this example, an `ESMF_Field` is created from an `ESMF_Mesh` and an `ESMF_ArraySpec`. The mesh object is created in the previous example. The Field is also created with optional arguments such as ungridded dimensions and dimension mapping.

In this example, the mesh is mapped to the 2nd dimension of the `ESMF_Field`, with its first dimension being the ungridded dimension with bounds 1,3.

```
call ESMF_ArraySpecSet(arrayspec, 2, ESMF_TYPEKIND_I4, rc=rc)
field = ESMF_FieldCreate(mesh, arrayspec=arrayspec, gridToFieldMap=(/2/), &
    ungriddedLBound=(/1/), ungriddedUBound=(/3/), rc=rc)
if (rc /= ESMF_SUCCESS) call ESMF_Finalize(endflag=ESMF_END_ABORT)
```

27.3.22 Create a Field with replicated dimensions

In this example an `ESMF_Field` with replicated dimension is created from an `ESMF_Grid` and an `ESMF_Arrayspec`. A user can also use other `ESMF_FieldCreate()` methods to create replicated dimension Field, this example illustrates the key concepts and use of a replicated dimension Field.

Normally gridToFieldMap argument in `ESMF_FieldCreate()` should not contain 0 value entries. However, for a Field with replicated dimension, a 0 entry in gridToFieldMap indicates the corresponding Grid dimension is replicated in the Field. In such a Field, the rank of the Field is no longer necessarily greater than its Grid rank. An example will make this clear. We will start by creating Distgrid and Grid.

```
! create 4D distgrid
distgrid = ESMF_DistGridCreate(minIndex=(/1,1,1,1/), &
    maxIndex=(/6,4,6,4/), regDecomp=(/2,1,2,1/), rc=rc)
if (rc /= ESMF_SUCCESS) call ESMF_Finalize(endflag=ESMF_END_ABORT)

! create 4D grid on top of the 4D distgrid
grid = ESMF_GridCreate(distgrid=distgrid, name="grid", rc=rc)
if (rc /= ESMF_SUCCESS) call ESMF_Finalize(endflag=ESMF_END_ABORT)

! create 3D arrayspec
call ESMF_ArraySpecSet(arrayspec, 3, ESMF_TYPEKIND_R8, rc=rc)
if (rc /= ESMF_SUCCESS) call ESMF_Finalize(endflag=ESMF_END_ABORT)
```

In this example, a user creates a 3D Field with replicated dimension replicated along the 2nd and 4th dimension of its underlying 4D Grid. In addition, the 2nd dimension of the Field is ungridded (why?). The 1st and 3rd dimensions of the Field have halos.

```
! create field, 2nd and 4th dimensions of the Grid are replicated
field = ESMF_FieldCreate(grid, arrayspec, indexflag=ESMF_INDEX_DELOCAL, &
    gridToFieldMap=(/1,0,2,0/), &
    ungriddedLBound=(/1/), ungriddedUBound=(/4/), &
    totalLWidth=(/1,1/), totalUWidth=(/4,5/), &
    staggerloc=ESMF_STAGGERLOC_CORNER, &
    rc=rc)
if (rc /= ESMF_SUCCESS) call ESMF_Finalize(endflag=ESMF_END_ABORT)

! get basic information from the field
call ESMF_FieldGet(field, grid=grid1, array=array, typekind=typekind, &
    dimCount=dimCount, staggerloc=lstaggerloc, &
    gridToFieldMap=lgridToFieldMap, ungriddedLBound=lungriddedLBound, &
    ungriddedUBound=lungriddedUBound, totalLWidth=ltotalLWidth, &
    totalUWidth=ltotalUWidth, rc=rc)
if (rc /= ESMF_SUCCESS) call ESMF_Finalize(endflag=ESMF_END_ABORT)

! get bounds information from the field
call ESMF_FieldGet(field, localDe=0, farrayPtr=farray, &
    exclusiveLBound=felb, exclusiveUBound=feub, exclusiveCount=fec, &
    computationalLBound=fclb, computationalUBound=fcub, &
    computationalCount=fcc, totalLBound=ftlb, totalUBound=ftub, &
    totalCount=ftc, rc=rc)
if (rc /= ESMF_SUCCESS) call ESMF_Finalize(endflag=ESMF_END_ABORT)
```

Next we verify that the field and array bounds agree with each other

```
call ESMF_ArrayGet(array, rank=arank, dimCount=adimCount, rc=rc)
if (rc /= ESMF_SUCCESS) call ESMF_Finalize(endflag=ESMF_END_ABORT)

gridrank_repdim = 0
do i = 1, size(gridToFieldMap)
    if(gridToFieldMap(i) == 0) gridrank_repdim = gridrank_repdim + 1
enddo
```

Number of undistributed dimension of the array *X* is computed from total rank of the array *A*, the dimension count of its underlying distgrid *B* and number of replicated dimension in the distgrid *C*. We have the following formula: X = A - (B - C)

```
allocate(audlb(arank-adimCount+gridrank_repdim), &
    audub(arank-adimCount+gridrank_repdim))
call ESMF_ArrayGet(array, exclusiveLBound=aelb, exclusiveUBound=aeub, &
    computationalLBound=aclb, computationalUBound=acub, &
    totalLBound=atlb, totalUBound=atub, &
    undistLBound=audlb, undistUBound=audub, &
    rc=rc)
if (rc /= ESMF_SUCCESS) call ESMF_Finalize(endflag=ESMF_END_ABORT)
```

```
! verify the ungridded bounds from field match
! undistributed bounds from its underlying array
do i = 1, arank-adimCount
    if(lungriddedLBound(i) .ne. audlb(i) ) &
        rc = ESMF_FAILURE
enddo
if (rc /= ESMF_SUCCESS) call ESMF_Finalize(endflag=ESMF_END_ABORT)

do i = 1, arank-adimCount
    if(lungriddedUBound(i) .ne. audub(i) ) &
        rc = ESMF_FAILURE
enddo
if (rc /= ESMF_SUCCESS) call ESMF_Finalize(endflag=ESMF_END_ABORT)
```

We then verify the data in the replicated dimension Field can be updated and accessed.

```
do ik = ftlb(3), ftub(3)
 do ij = ftlb(2), ftub(2)
  do ii = ftlb(1), ftub(1)
    farray(ii,ij,ik) = ii+ij*2+ik
  enddo
 enddo
enddo
! access and verify
call ESMF_FieldGet(field, localDe=0, farrayPtr=farray1, &
    rc=rc)
if (rc /= ESMF_SUCCESS) call ESMF_Finalize(endflag=ESMF_END_ABORT)
do ik = ftlb(3), ftub(3)
 do ij = ftlb(2), ftub(2)
  do ii = ftlb(1), ftub(1)
    n = ii+ij*2+ik
    if(farray1(ii,ij,ik) .ne. n ) rc = ESMF_FAILURE
  enddo
 enddo
enddo
if (rc /= ESMF_SUCCESS) call ESMF_Finalize(endflag=ESMF_END_ABORT)

! release resources
call ESMF_FieldDestroy(field)
call ESMF_GridDestroy(grid)
call ESMF_DistGridDestroy(distgrid)
```

27.3.23 Create a Field on an arbitrarily distributed Grid

With the introduction of Field on arbitrarily distributed Grid, Field has two kinds of dimension count: one associated geometrical (or physical) dimensionality, the other one associated with its memory index space representation. Field and Grid dimCount reflect the physical index space of the objects. A new type of dimCount rank should be added to both of these entities. The rank gives the number of dimensions of the memory index space of the objects. This would be the dimension of the pointer pulled out of Field and the size of the bounds vector, for example.

For non-arbitrary Grids rank=dimCount, but for grids and fields with arbitrary dimensions rank = dimCount - (number of Arb dims) + 1 (Internally Field can use the Arb info from the grid to create the mapping from the Field Array to the DistGrid)

When creating a Field size(GridToFieldMap)=dimCount for both Arb and Non-arb grids This array specifies the mapping of Field to Grid identically for both Arb and Nonarb grids If a zero occurs in an entry corresponding to any arbitrary dimension, then a zero must occur in every entry corresponding to an arbitrary dimension (i.e. all arbitrary dimensions must either be all replicated or all not replicated, they can't be broken apart).

In this example an `ESMF_Field` is created from an arbitrarily distributed `ESMF_Grid` and an `ESMF_Arrayspec`. A user can also use other `ESMF_FieldCreate()` methods to create such a Field, this example illustrates the key concepts and use of Field on arbitrary distributed Grid.

The Grid is 3 dimensional in physics index space but the first two dimension are collapsed into a single memory index space. Thus the resulting Field is 3D in physics index space and 2D in memory index space. This is made obvious with the 2D arrayspec used to create this Field.

```
! create a 3D grid with the first 2 dimensions collapsed
! and arbitrarily distributed
grid3d = ESMF_GridCreateNoPeriDim(coordTypeKind=ESMF_TYPEKIND_R8, &
  minIndex=(/1,1,1/), maxIndex=(/xdim, ydim,zdim/), &
  arbIndexList=localArbIndex,arbIndexCount=localArbIndexCount, &
  name="arb3dgrid", rc=rc)
if (rc /= ESMF_SUCCESS) call ESMF_Finalize(endflag=ESMF_END_ABORT)

! create a 2D arrayspec
call ESMF_ArraySpecSet(arrayspec2D, rank=2, typekind=ESMF_TYPEKIND_R4, &
     rc=rc)
if (rc /= ESMF_SUCCESS) call ESMF_Finalize(endflag=ESMF_END_ABORT)

! create a 2D Field using the Grid and the arrayspec
field = ESMF_FieldCreate(grid3d, arrayspec2D, rc=rc)
if (rc /= ESMF_SUCCESS) call ESMF_Finalize(endflag=ESMF_END_ABORT)

call ESMF_FieldGet(field, rank=rank, dimCount=dimCount, &
                   rc=rc)
if (myPet .eq. 0) print *, 'Field rank, dimCount', &
                           rank, dimCount
if (rc /= ESMF_SUCCESS) call ESMF_Finalize(endflag=ESMF_END_ABORT)

! verify that the dimension counts are correct
if (rank .ne. 2) correct = .false.
if (dimCount .ne. 3) correct = .false.
```

27.3.24 Create a Field on an arbitrarily distributed Grid with replicated dimensions & ungridded bounds

The next example is slightly more complicated in that the Field also contains one ungridded dimension and its gridded dimension is replicated on the arbitrarily distributed dimension of the Grid.

The same 3D Grid and 2D arrayspec in the previous example are used but a gridToFieldMap argument is supplied to the `ESMF_FieldCreate()` call. The first 2 entries of the map are 0, the last (3rd) entry is 1. The 3rd dimension of the Grid is mapped to the first dimension of the Field, this dimension is then replicated on the arbitrarily distributed dimensions of the Grid. In addition, the Field also has one ungridded dimension. Thus the final dimension count of the Field is 2 in both physics and memory index space.

```
field = ESMF_FieldCreate(grid3d, arrayspec2D,gridToFieldMap=(/0,0,1/), &
        ungriddedLBound=(/1/), ungriddedUBound=(/10/),rc=rc)
if (rc /= ESMF_SUCCESS) call ESMF_Finalize(endflag=ESMF_END_ABORT)
```

```
call ESMF_FieldGet(field, rank=rank, dimCount=dimCount, &
                   rc=rc)
if (myPet .eq. 0) print *, 'Field rank, dimCount', &
                           rank, dimCount
if (rc /= ESMF_SUCCESS) call ESMF_Finalize(endflag=ESMF_END_ABORT)

if (rank .ne. 2) correct = .false.
if (dimCount .ne. 2) correct = .false.
```

27.3.25 Field regridding

This section describes the Field regrid methods. For an in depth description of ESMF regridding and the options available please see Section 25.2.

The basic flow of ESMF Field regridding is as follows. First a source and destination geometry object are created, depending on the regrid method they can be either a Grid, a Mesh, an XGrid, or a LocStream. Next Fields are built on the source and destination grid objects. These Fields are then passed into `ESMF_FieldRegridStore()`. The user can either get a sparse matrix from this call and/or a `routeHandle`. If the user gets the sparse matrix then they are responsible for deallocating it, but other than that can use it as they wish. The `routeHandle` can be used in the `ESMF_FieldRegrid()` call to perform the actual interpolation of data from the source to the destination field. This interpolation can be repeated for the same set of Fields as long as the coordinates at the staggerloc involved in the regridding in the associated grid object don't change. The same `routeHandle` can also be used between any pair of Fields that matches the original pari in *type*, *kind*, and memory layout of the *gridded* dimensions. However, the size, number, and index order of *ungridded* dimensions may be different. See section 38.2.5 for a more detailed discussion of RouteHandle reusability. However, if you want the routehandle to be the same interpolation between the grid objects upon which the Fields are built as was calculated with the original `ESMF_FieldRegridStore()` call, then there are additional constraints on the grid objects. To be the same interpolation, the grid objects upon which the Fields are build must contain the same coordinates at the stagger locations involved in the regridding as the original source and destination Fields used in the `ESMF_FieldRegridStore()` call. The routehandle represents the interpolation between the grid objects as they were during the `ESMF_FieldRegridStore()` call. So if the coordinates at the stagger location in the grid objects change, a new call to `ESMF_FieldRegridStore()` is necessary to compute the interpolation between that new set of coordinates. When finished with the `routeHandle` `ESMF_FieldRegridRelease()` should be used to free the associated memory.

The following example demonstrates doing a regrid operation between two Fields.

```
! (Create source Grid, Mesh, XGrid, or LocStream.)
! (Create srcField on the above.)

! (Create destination Grid, Mesh, XGrid, or LocStream.)
! (Create dstField on the above.)

! Create the routeHandle which encodes the communication and
! information necessary for the regrid sparse matrix multiply.
call ESMF_FieldRegridStore(srcField=srcField, dstField=dstField, &
                           routeHandle=routeHandle, rc=localrc)


! Can loop here regridding from srcField to dstField
! do i=1,....

     ! (Put data into srcField)
```

```
      ! Use the routeHandle to regrid data from srcField to dstField.
      ! As described above, the same routeHandle can be used to
      ! regrid a large class of different source and destination Fields.
      call ESMF_FieldRegrid(srcField, dstField, routeHandle, rc=localrc)


!     (Use data in dstField)

! enddo


! Free the buffers and data associated with the routeHandle.
call ESMF_FieldRegridRelease(routeHandle, rc=localrc)
```

27.3.26 Field regrid with masking

As before, to create the sparse matrix regrid operator we call the `ESMF_FieldRegridStore()` routine. However, in this case we apply masking to the regrid operation. The mask value for each index location in the Grids may be set using the `ESMF_GridAddItem()` call (see Section 32.3.17 and Section 32.3.18). Mask values may be set independently for the source and destination Grids. If no mask values have been set in a Grid, then it is assumed no masking should be used for that Grid. The `srcMaskValues` parameter allows the user to set the list of values which indicate that a source location should be masked out. The `dstMaskValues` parameter allows the user to set the list of values which indicate that a destination location should be masked out. The absence of one of these parameters indicates that no masking should be used for that Field (e.g no `srcMaskValue` parameter indicates that source masking shouldn't occur). The `unmappedaction` flag may be used with or without masking and indicates what should occur if destination points can not be mapped to a source cell. Here the `ESMF_UNMAPPEDACTION_IGNORE` value indicates that unmapped destination points are to be ignored and no sparse matrix entries should be generated for them.

```
call ESMF_FieldRegridStore(srcField=srcField, srcMaskValues=(/1/),       &
                           dstField=dstField, dstMaskValues=(/1/),       &
                           unmappedaction=ESMF_UNMAPPEDACTION_IGNORE, &
                           routeHandle=routeHandle,                      &
                           regridmethod=ESMF_REGRIDMETHOD_BILINEAR,     &
                           rc=localrc)
```

The `ESMF_FieldRegrid` and `ESMF_FieldRegridRelease` calls may then be applied as in the previous example.

27.3.27 Field regrid example: Mesh to Mesh

This example demonstrates the regridding process between Fields created on Meshes. First the Meshes are created. This example omits the setup of the arrays describing the Mesh, but please see Section 34.3.1 for examples of this. After creation Fields are constructed on the Meshes, and then ESMF_FieldRegridStore() is called to construct a RouteHandle implementing the regrid operation. Finally, ESMF_FieldRegrid() is called with the Fields and the RouteHandle to do the interpolation between the source Field and destination Field. Note the coordinates of the source and destination Mesh should be in degrees.

```
!!!!!!!!!!!!!!!!!!!!!!!!!!!!!!!!!!!!!!!!!!!!!!!
! Create Source Mesh
!!!!!!!!!!!!!!!!!!!!!!!!!!!!!!!!!!!!!!!!!!!!!!!

! Create the Mesh structure.
! For brevity's sake, the code to fill the Mesh creation
! arrays is omitted from this example. However, here
! is a brief description of the arrays:
! srcNodeIds    - the global ids for the src nodes
! srcNodeCoords - the coordinates for the src nodes
! srcNodeOwners - which PET owns each src node
! srcElemIds    - the global ids of the src elements
! srcElemTypes  - the topological shape of each src element
! srcElemConn   - how to connect the nodes to form the elements
!                 in the source mesh
! Several examples of setting up these arrays can be seen in
! the Mesh Section "Mesh Creation".
srcMesh=ESMF_MeshCreate(parametricDim=2,spatialDim=2, &
       nodeIds=srcNodeIds, nodeCoords=srcNodeCoords, &
       nodeOwners=srcNodeOwners, elementIds=srcElemIds,&
       elementTypes=srcElemTypes, elementConn=srcElemConn, rc=rc)

if (rc /= ESMF_SUCCESS) call ESMF_Finalize(endflag=ESMF_END_ABORT)



!!!!!!!!!!!!!!!!!!!!!!!!!!!!!!!!!!!!!!!!!!!!!!!
! Create and Fill Source Field
!!!!!!!!!!!!!!!!!!!!!!!!!!!!!!!!!!!!!!!!!!!!!!!

! Set description of source Field
call ESMF_ArraySpecSet(arrayspec, 1, ESMF_TYPEKIND_R8, rc=rc)

if (rc /= ESMF_SUCCESS) call ESMF_Finalize(endflag=ESMF_END_ABORT)

! Create source Field
srcField = ESMF_FieldCreate(srcMesh, arrayspec, &
                      name="source", rc=rc)

if (rc /= ESMF_SUCCESS) call ESMF_Finalize(endflag=ESMF_END_ABORT)

! Get source Field data pointer to put data into
call ESMF_FieldGet(srcField, 0, fptr1D,  rc=rc)

if (rc /= ESMF_SUCCESS) call ESMF_Finalize(endflag=ESMF_END_ABORT)

! Get number of local nodes to allocate space
! to hold local node coordinates
call ESMF_MeshGet(srcMesh, &
       numOwnedNodes=numOwnedNodes, rc=rc)

if (rc /= ESMF_SUCCESS) call ESMF_Finalize(endflag=ESMF_END_ABORT)

! Allocate space to hold local node coordinates
! (spatial dimension of Mesh*number of local nodes)
```

```
allocate(ownedNodeCoords(2*numOwnedNodes))

! Get local node coordinates
call ESMF_MeshGet(srcMesh, &
       ownedNodeCoords=ownedNodeCoords, rc=rc)

if (rc /= ESMF_SUCCESS) call ESMF_Finalize(endflag=ESMF_END_ABORT)

! Set the source Field to the function 20.0+x+y
do i=1,numOwnedNodes
  ! Get coordinates
  x=ownedNodeCoords(2*i-1)
  y=ownedNodeCoords(2*i)

 ! Set source function
 fptr1D(i) = 20.0+x+y
enddo

! Deallocate local node coordinates
deallocate(ownedNodeCoords)


!!!!!!!!!!!!!!!!!!!!!!!!!!!!!!!!!!!!!!!!!!!!!!!!!!!
! Create Destination Mesh
!!!!!!!!!!!!!!!!!!!!!!!!!!!!!!!!!!!!!!!!!!!!!!!!!!!

! Create the Mesh structure.
! For brevity's sake, the code to fill the Mesh creation
! arrays is omitted from this example. However, here
! is a brief description of the arrays:
! dstNodeIds    - the global ids for the dst nodes
! dstNodeCoords - the coordinates for the dst nodes
! dstNodeOwners - which PET owns each dst node
! dstElemIds    - the global ids of the dst elements
! dstElemTypes  - the topological shape of each dst element
! dstElemConn   - how to connect the nodes to form the elements
!                 in the destination mesh
! Several examples of setting up these arrays can be seen in
! the Mesh Section "Mesh Creation".
dstMesh=ESMF_MeshCreate(parametricDim=2,spatialDim=2, &
       nodeIds=dstNodeIds, nodeCoords=dstNodeCoords, &
       nodeOwners=dstNodeOwners, elementIds=dstElemIds,&
       elementTypes=dstElemTypes, elementConn=dstElemConn, rc=rc)

if (rc /= ESMF_SUCCESS) call ESMF_Finalize(endflag=ESMF_END_ABORT)


!!!!!!!!!!!!!!!!!!!!!!!!!!!!!!!!!!!!!!!!!!!!!!!!!!!
! Create Destination Field
!!!!!!!!!!!!!!!!!!!!!!!!!!!!!!!!!!!!!!!!!!!!!!!!!!!

! Set description of source Field
call ESMF_ArraySpecSet(arrayspec, 1, ESMF_TYPEKIND_R8, rc=rc)

if (rc /= ESMF_SUCCESS) call ESMF_Finalize(endflag=ESMF_END_ABORT)
```

```
! Create destination Field
dstField = ESMF_FieldCreate(dstMesh, arrayspec, &
                      name="destination", rc=rc)

if (rc /= ESMF_SUCCESS) call ESMF_Finalize(endflag=ESMF_END_ABORT)

!!!!!!!!!!!!!!!!!!!!!!!!!!!!!!!!!!!!!!!!!!!!!!!!!
! Do Regrid
!!!!!!!!!!!!!!!!!!!!!!!!!!!!!!!!!!!!!!!!!!!!!!!!!

! Compute RouteHandle which contains the regrid operation
call ESMF_FieldRegridStore( &
        srcField, &
        dstField=dstField, &
        routeHandle=routeHandle, &
        regridmethod=ESMF_REGRIDMETHOD_BILINEAR, &
        rc=rc)

if (rc /= ESMF_SUCCESS) call ESMF_Finalize(endflag=ESMF_END_ABORT)

! Perform Regrid operation moving data from srcField to dstField
call ESMF_FieldRegrid(srcField, dstField, routeHandle, rc=rc)


if (rc /= ESMF_SUCCESS) call ESMF_Finalize(endflag=ESMF_END_ABORT)

!!!!!!!!!!!!!!!!!!!!!!!!!!!!!!!!!!!!!!!!!!!!!!!!!
! dstField now contains the interpolated data.
! If the Meshes don't change, then routeHandle
! may be used repeatedly to interpolate from
! srcField to dstField.
!!!!!!!!!!!!!!!!!!!!!!!!!!!!!!!!!!!!!!!!!!!!!!!!!


! User code to use the routeHandle, Fields, and
! Meshes goes here before they are freed below.


!!!!!!!!!!!!!!!!!!!!!!!!!!!!!!!!!!!!!!!!!!!!!!!!!
! Free the objects created in the example.
!!!!!!!!!!!!!!!!!!!!!!!!!!!!!!!!!!!!!!!!!!!!!!!!!

! Free the RouteHandle
call ESMF_FieldRegridRelease(routeHandle, rc=rc)

if (rc /= ESMF_SUCCESS) call ESMF_Finalize(endflag=ESMF_END_ABORT)

! Free the Fields
call ESMF_FieldDestroy(srcField, rc=rc)

if (rc /= ESMF_SUCCESS) call ESMF_Finalize(endflag=ESMF_END_ABORT)

call ESMF_FieldDestroy(dstField, rc=rc)
```

```
if (rc /= ESMF_SUCCESS) call ESMF_Finalize(endflag=ESMF_END_ABORT)

! Free the Meshes
call ESMF_MeshDestroy(dstMesh, rc=rc)

if (rc /= ESMF_SUCCESS) call ESMF_Finalize(endflag=ESMF_END_ABORT)

call ESMF_MeshDestroy(srcMesh, rc=rc)

if (rc /= ESMF_SUCCESS) call ESMF_Finalize(endflag=ESMF_END_ABORT)
```

27.3.28 Gather Field data onto root PET

User can use `ESMF_FieldGather` interface to gather Field data from multiple PETs onto a single root PET. This interface is overloaded by type, kind, and rank.

Note that the implementation of Scatter and Gather is not sequence index based. If the Field is built on arbitrarily distributed Grid, Mesh, LocStream or XGrid, Gather will not gather data to rootPet from source data points corresponding to the sequence index on the rootPet. Instead Gather will gather a contiguous memory range from source PET to rootPet. The size of the memory range is equal to the number of data elements on the source PET. Vice versa for the Scatter operation. In this case, the user should use `ESMF_FieldRedist` to achieve the same data operation result. For examples how to use `ESMF_FieldRedist` to perform Gather and Scatter, please refer to 27.3.32 and 27.3.31.

In this example, we first create a 2D Field, then use `ESMF_FieldGather` to collect all the data in this Field into a data pointer on PET 0.

```
! Get current VM and pet number
call ESMF_VMGetCurrent(vm, rc=rc)
if (rc /= ESMF_SUCCESS) call ESMF_Finalize(endflag=ESMF_END_ABORT)

call ESMF_VMGet(vm, localPet=lpe, rc=rc)
if (rc /= ESMF_SUCCESS) call ESMF_Finalize(endflag=ESMF_END_ABORT)

! Create a 2D Grid and use this grid to create a Field
! farray is the Fortran data array that contains data on each PET.
grid = ESMF_GridCreateNoPeriDim(minIndex=(/1,1/), maxIndex=(/10,20/), &
    regDecomp=(/2,2/), &
    name="grid", rc=rc)
if (rc /= ESMF_SUCCESS) call ESMF_Finalize(endflag=ESMF_END_ABORT)

field = ESMF_FieldCreate(grid, typekind=ESMF_TYPEKIND_I4, rc=localrc)
if (localrc /= ESMF_SUCCESS) call ESMF_Finalize(endflag=ESMF_END_ABORT)


call ESMF_FieldGet(field, farrayPtr=fptr, rc=localrc)
if (localrc /= ESMF_SUCCESS) call ESMF_Finalize(endflag=ESMF_END_ABORT)
!---------Initialize pet specific field data----------------
!    1        5         10
! 1  +--------+---------+
!    |        |         |
!    |   0    |    1    |
!    |        |         |
```

```
! 10 +--------+---------+
!    |        |         |
!    |   2    |    3    |
!    |        |         |
! 20 +--------+---------+
fptr = lpe

! allocate the Fortran data array on PET 0 to store gathered data
if(lpe .eq. 0) then
  allocate (farrayDst(10,20))
else
  allocate (farrayDst(0,0))
end if
call ESMF_FieldGather(field, farrayDst, rootPet=0, rc=rc)
if (rc /= ESMF_SUCCESS) call ESMF_Finalize(endflag=ESMF_END_ABORT)

! check that the values gathered on rootPet are correct
if(lpe .eq. 0) then
   do i = 1, 5
      do j = 1, 10
         if(farrayDst(i, j) .ne. 0) localrc=ESMF_FAILURE
      enddo
   enddo
  if (localrc /= ESMF_SUCCESS) call ESMF_Finalize(endflag=ESMF_END_ABORT)
   do i = 6, 10
      do j = 1, 10
         if(farrayDst(i, j) .ne. 1) localrc=ESMF_FAILURE
      enddo
   enddo
  if (localrc /= ESMF_SUCCESS) call ESMF_Finalize(endflag=ESMF_END_ABORT)
   do i = 1, 5
      do j = 11, 20
         if(farrayDst(i, j) .ne. 2) localrc=ESMF_FAILURE
      enddo
   enddo
  if (localrc /= ESMF_SUCCESS) call ESMF_Finalize(endflag=ESMF_END_ABORT)
   do i = 6, 10
      do j = 11, 20
         if(farrayDst(i, j) .ne. 3) localrc=ESMF_FAILURE
      enddo
   enddo
  if (localrc /= ESMF_SUCCESS) call ESMF_Finalize(endflag=ESMF_END_ABORT)
endif

! destroy all objects created in this example to prevent memory leak
call ESMF_FieldDestroy(field, rc=rc)
if (rc /= ESMF_SUCCESS) call ESMF_Finalize(endflag=ESMF_END_ABORT)
call ESMF_GridDestroy(grid, rc=rc)
if (rc /= ESMF_SUCCESS) call ESMF_Finalize(endflag=ESMF_END_ABORT)
if(lpe .eq. 0) deallocate(farrayDst)
```

27.3.29 Scatter Field data from root PET onto its set of joint PETs

User can use `ESMF_FieldScatter` interface to scatter Field data from root PET onto its set of joint PETs. This interface is overloaded by type, kind, and rank.

In this example, we first create a 2D Field, then use `ESMF_FieldScatter` to scatter the data from a data array located on PET 0 onto this Field.

```
! Create a 2D Grid and use this grid to create a Field
! farray is the Fortran data array that contains data on each PET.
grid = ESMF_GridCreateNoPeriDim(minIndex=(/1,1/), maxIndex=(/10,20/), &
    regDecomp=(/2,2/), &
    name="grid", rc=rc)
if (rc /= ESMF_SUCCESS) call ESMF_Finalize(endflag=ESMF_END_ABORT)

field = ESMF_FieldCreate(grid, typekind=ESMF_TYPEKIND_I4, rc=localrc)
if (localrc /= ESMF_SUCCESS) call ESMF_Finalize(endflag=ESMF_END_ABORT)

! initialize values to be scattered
!    1        5         10
! 1  +--------+---------+
!    |        |         |
!    |   0    |    1    |
!    |        |         |
! 10 +--------+---------+
!    |        |         |
!    |   2    |    3    |
!    |        |         |
! 20 +--------+---------+
if(lpe .eq. 0) then
    allocate(farraySrc(10,20))
    farraySrc(1:5,1:10) = 0
    farraySrc(6:10,1:10) = 1
    farraySrc(1:5,11:20) = 2
    farraySrc(6:10,11:20) = 3
else
  allocate (farraySrc(0,0))
endif

! scatter the data onto individual PETs of the Field
call ESMF_FieldScatter(field, farraySrc, rootPet=0, rc=rc)
if (rc /= ESMF_SUCCESS) call ESMF_Finalize(endflag=ESMF_END_ABORT)

call ESMF_FieldGet(field, localDe=0, farrayPtr=fptr, rc=rc)
if (rc /= ESMF_SUCCESS) call ESMF_Finalize(endflag=ESMF_END_ABORT)

! verify that the scattered data is properly distributed
do i = lbound(fptr, 1), ubound(fptr, 1)
    do j = lbound(fptr, 2), ubound(fptr, 2)
        if(fptr(i, j) .ne. lpe) localrc = ESMF_FAILURE
    enddo
    if (localrc /= ESMF_SUCCESS) call ESMF_Finalize(endflag=ESMF_END_ABORT)
enddo

! destroy all objects created in this example to prevent memory leak
call ESMF_FieldDestroy(field, rc=rc)
```

```
if (rc /= ESMF_SUCCESS) call ESMF_Finalize(endflag=ESMF_END_ABORT)
call ESMF_GridDestroy(grid, rc=rc)
if (rc /= ESMF_SUCCESS) call ESMF_Finalize(endflag=ESMF_END_ABORT)
if(lpe .eq. 0) deallocate(farraySrc)
```

27.3.30 Redistribute data from source Field to destination Field

User can use `ESMF_FieldRedist` interface to redistribute data from source Field to destination Field. This interface is overloaded by type and kind; In the version of `ESMF_FieldRedist` without factor argument, a default value of 1 is used.

In this example, we first create two 1D Fields, a source Field and a destination Field. Then we use `ESMF_FieldRedist` to redistribute data from source Field to destination Field.

```
! Get current VM and pet number
call ESMF_VMGetCurrent(vm, rc=rc)
if (rc /= ESMF_SUCCESS) call ESMF_Finalize(endflag=ESMF_END_ABORT)

call ESMF_VMGet(vm, localPet=localPet, rc=rc)
if (rc /= ESMF_SUCCESS) call ESMF_Finalize(endflag=ESMF_END_ABORT)

! create grid
distgrid = ESMF_DistGridCreate(minIndex=(/1/), maxIndex=(/16/), &
        regDecomp=(/4/), &
        rc=rc)
if (rc /= ESMF_SUCCESS) call ESMF_Finalize(endflag=ESMF_END_ABORT)

grid = ESMF_GridCreate(distgrid=distgrid, &
    name="grid", rc=rc)
if (rc /= ESMF_SUCCESS) call ESMF_Finalize(endflag=ESMF_END_ABORT)

! create srcField
! +--------+--------+--------+--------+
!      0        1        2        3            ! value
! 1        4        8        12       16       ! bounds
srcField = ESMF_FieldCreate(grid, typekind=ESMF_TYPEKIND_I4, &
  indexflag=ESMF_INDEX_DELOCAL, rc=rc)
if (rc /= ESMF_SUCCESS) call ESMF_Finalize(endflag=ESMF_END_ABORT)

call ESMF_FieldGet(srcField, farrayPtr=srcfptr, rc=rc)
if (rc /= ESMF_SUCCESS) call ESMF_Finalize(endflag=ESMF_END_ABORT)

srcfptr(:) = localPet

! create dstField
! +--------+--------+--------+--------+
!      0        0        0        0            ! value
! 1        4        8        12       16       ! bounds
dstField = ESMF_FieldCreate(grid, typekind=ESMF_TYPEKIND_I4, &
  indexflag=ESMF_INDEX_DELOCAL, rc=rc)
if (rc /= ESMF_SUCCESS) call ESMF_Finalize(endflag=ESMF_END_ABORT)

call ESMF_FieldGet(dstField, farrayPtr=dstfptr, rc=rc)
```

```
if (rc /= ESMF_SUCCESS) call ESMF_Finalize(endflag=ESMF_END_ABORT)

dstfptr(:) = 0

! perform redist
! 1. setup routehandle from source Field to destination Field
call ESMF_FieldRedistStore(srcField, dstField, routehandle, rc=rc)
if (rc /= ESMF_SUCCESS) call ESMF_Finalize(endflag=ESMF_END_ABORT)

! 2. use precomputed routehandle to redistribute data
call ESMF_FieldRedist(srcfield, dstField, routehandle, rc=rc)
if (rc /= ESMF_SUCCESS) call ESMF_Finalize(endflag=ESMF_END_ABORT)

! verify redist
call ESMF_FieldGet(dstField, localDe=0, farrayPtr=fptr, rc=rc)
if (rc /= ESMF_SUCCESS) call ESMF_Finalize(endflag=ESMF_END_ABORT)

! Verify that the redistributed data in dstField is correct.
! Before the redist op, the dst Field contains all 0.
! The redist op reset the values to the PE value, verify this is the case.
do i = lbound(fptr, 1), ubound(fptr, 1)
    if(fptr(i) .ne. localPet) localrc = ESMF_FAILURE
enddo
if (localrc /= ESMF_SUCCESS) call ESMF_Finalize(endflag=ESMF_END_ABORT)
```

Field redistribution can also be performed between different Field pairs that match the original Fields in *type*, *kind*, and memory layout of the *gridded* dimensions. However, the size, number, and index order of *ungridded* dimensions may be different. See section 38.2.5 for a more detailed discussion of RouteHandle reusability.

```
call ESMF_ArraySpecSet(arrayspec, typekind=ESMF_TYPEKIND_I4, rank=2, rc=rc)
```

Create two fields with ungridded dimensions using the Grid created previously. The new Field pair has matching number of elements. The ungridded dimension is mapped to the first dimension of either Field.

```
srcFieldA = ESMF_FieldCreate(grid, arrayspec, gridToFieldMap=(/2/), &
    ungriddedLBound=(/1/), ungriddedUBound=(/10/), rc=rc)

dstFieldA = ESMF_FieldCreate(grid, arrayspec, gridToFieldMap=(/2/), &
    ungriddedLBound=(/1/), ungriddedUBound=(/10/), rc=rc)
```

Using the previously computed routehandle, the Fields can be redistributed.

```
call ESMF_FieldRedist(srcfieldA, dstFieldA, routehandle, rc=rc)

call ESMF_FieldRedistRelease(routehandle, rc=rc)
```

27.3.31 FieldRedist as a form of scatter involving arbitrary distribution

User can use `ESMF_FieldRedist` interface to redistribute data from source Field to destination Field, where the destination Field is built on an arbitrarily distributed structure, e.g. `ESMF_Mesh`. The underlying mechanism is explained in section 29.2.19.

In this example, we will create 2 one dimensional Fields, the src Field has a regular decomposition and holds all its data on a single PET, in this case PET 0. The destination Field is built on a Mesh which is itself built on an arbitrarily distributed distgrid. Then we use `ESMF_FieldRedist` to redistribute data from source Field to destination Field, similar to a traditional scatter operation.

The src Field only has data on PET 0 where it is sequentially initialized, i.e. 1,2,3...This data will be redistributed (or scattered) from PET 0 to the destination Field arbitrarily distributed on all the PETs.

```
! a one dimensional grid whose elements are all located on PET 0
distgrid = ESMF_DistGridCreate(minIndex=(/1/), maxIndex=(/9/), &
    regDecomp=(/1/), &
    rc=rc)
if (rc /= ESMF_SUCCESS) call ESMF_Finalize(endflag=ESMF_END_ABORT)
grid = ESMF_GridCreate(distgrid=distgrid, &
    indexflag=ESMF_INDEX_DELOCAL, rc=rc)
if (rc /= ESMF_SUCCESS) call ESMF_Finalize(endflag=ESMF_END_ABORT)

srcField = ESMF_FieldCreate(grid, typekind=ESMF_TYPEKIND_I4, rc=rc)
if (rc /= ESMF_SUCCESS) call ESMF_Finalize(endflag=ESMF_END_ABORT)

! initialize the source data
if (localPet == 0) then
    call ESMF_FieldGet(srcField, farrayPtr=srcfptr, rc=rc)
    if (rc /= ESMF_SUCCESS) call ESMF_Finalize(endflag=ESMF_END_ABORT)
    do i = 1, 9
        srcfptr(i) = i
    enddo
endif
```

For more information on Mesh creation, user can refer to Mesh examples section or Field creation on Mesh example for more details.

```
! Create Mesh structure
mesh=ESMF_MeshCreate(parametricDim=2,spatialDim=2, &
       nodeIds=nodeIds, nodeCoords=nodeCoords, &
       nodeOwners=nodeOwners, elementIds=elemIds,&
       elementTypes=elemTypes, elementConn=elemConn, &
       rc=rc)
if (rc /= ESMF_SUCCESS) call ESMF_Finalize(endflag=ESMF_END_ABORT)
```

Create the destination Field on the Mesh that is arbitrarily distributed on all the PETs.

```
dstField = ESMF_FieldCreate(mesh, typekind=ESMF_TYPEKIND_I4, rc=rc)
if (rc /= ESMF_SUCCESS) call ESMF_Finalize(endflag=ESMF_END_ABORT)
```

Perform the redistribution from source Field to destination Field.

```
call ESMF_FieldRedistStore(srcField, dstField, &
       routehandle=routehandle, rc=rc)
if (rc /= ESMF_SUCCESS) call ESMF_Finalize(endflag=ESMF_END_ABORT)
call ESMF_FieldRedist(srcField, dstField, routehandle=routehandle, rc=rc)
if (rc /= ESMF_SUCCESS) call ESMF_Finalize(endflag=ESMF_END_ABORT)
```

We can now verify that the sequentially initialized source data is scattered on to the destination Field. The data has been scattered onto the destination Field with the following distribution.

```
4 elements on PET 0:  1 2 4 5
2 elements on PET 1:  3 6
2 elements on PET 2:  7 8
1 element  on PET 3:  9
```

Because the redistribution is index based, the elements also corresponds to the index space of Mesh in the destination Field.

```
call ESMF_FieldGet(dstField, farrayPtr=dstfptr, rc=rc)
if (rc /= ESMF_SUCCESS) call ESMF_Finalize(endflag=ESMF_END_ABORT)
```

The scatter operation is successful. Since the routehandle computed with `ESMF_FieldRedistStore` can be reused, user can use the same routehandle to scatter multiple source Fields from a single PET to multiple destination Fields distributed on all PETs. The `gathering` operation is just the opposite of the demonstrated `scattering` operation, where a user would redist from a source Field distributed on multiple PETs to a destination Field that only has data storage on a single PET.

Now it's time to release all the resources.

```
call ESMF_FieldRedistRelease(routehandle=routehandle, rc=rc)
```

27.3.32 FieldRedist as a form of gather involving arbitrary distribution

Similarly, one can use the same approach to gather the data from an arbitrary distribution to a non-arbitrary distribution. This concept is demonstrated by using the previous Fields but the data operation is reversed. This time data is gathered from the Field built on the mesh to the Field that has only data allocation on rootPet.

First a FieldRedist routehandle is created from the Field built on Mesh to the Field that has only data allocation on rootPet.

```
call ESMF_FieldRedistStore(dstField, srcField, routehandle=routehandle, &
     rc=rc)
```

Perform FieldRedist, this will gather the data points from the Field built on mesh to the data pointer on the rootPet (default to 0) stored in the srcField.

```
call ESMF_FieldRedist(dstField, srcField, routehandle=routehandle, rc=rc)
```

Release the routehandle used for the gather operation.

```
call ESMF_FieldRedistRelease(routehandle=routehandle, rc=rc)
```

27.3.33 Sparse matrix multiplication from source Field to destination Field

The `ESMF_FieldSMM()` interface can be used to perform sparse matrix multiplication from source Field to destination Field. This interface is overloaded by type and kind;

In this example, we first create two 1D Fields, a source Field and a destination Field. Then we use `ESMF_FieldSMM` to perform sparse matrix multiplication from source Field to destination Field.

The source and destination Field data are arranged such that each of the 4 PETs has 4 data elements. Moreover, the source Field has all its data elements initialized to a linear function based on local PET number. Then collectively on each PET, a SMM according to the following formula is preformed:
$dstField(i) = i * srcField(i), i = 1...4$

Because source Field data are initialized to a linear function based on local PET number, the formula predicts that the result destination Field data on each PET is 1,2,3,4. This is verified in the example.

Section 29.2.18 provides a detailed discussion of the sparse matrix multiplication operation implemented in ESMF.

```
! Get current VM and pet number
call ESMF_VMGetCurrent(vm, rc=rc)
if (rc /= ESMF_SUCCESS) call ESMF_Finalize(endflag=ESMF_END_ABORT)

call ESMF_VMGet(vm, localPet=lpe, rc=rc)
if (rc /= ESMF_SUCCESS) call ESMF_Finalize(endflag=ESMF_END_ABORT)

! create distgrid and grid
distgrid = ESMF_DistGridCreate(minIndex=(/1/), maxIndex=(/16/), &
    regDecomp=(/4/), &
    rc=rc)
if (rc /= ESMF_SUCCESS) call ESMF_Finalize(endflag=ESMF_END_ABORT)

grid = ESMF_GridCreate(distgrid=distgrid, &
    name="grid", rc=rc)
if (rc /= ESMF_SUCCESS) call ESMF_Finalize(endflag=ESMF_END_ABORT)

call ESMF_GridGetFieldBounds(grid, localDe=0, totalCount=fa_shape, rc=rc)
if (rc /= ESMF_SUCCESS) call ESMF_Finalize(endflag=ESMF_END_ABORT)

! create src\_farray, srcArray, and srcField
! +--------+--------+--------+--------+
!      1        2        3        4            ! value
! 1        4        8        12       16       ! bounds
allocate(src_farray(fa_shape(1)) )
src_farray = lpe+1
srcArray = ESMF_ArrayCreate(distgrid, src_farray, &
            indexflag=ESMF_INDEX_DELOCAL, rc=rc)
if (rc /= ESMF_SUCCESS) call ESMF_Finalize(endflag=ESMF_END_ABORT)

srcField = ESMF_FieldCreate(grid, srcArray, rc=rc)
if (rc /= ESMF_SUCCESS) call ESMF_Finalize(endflag=ESMF_END_ABORT)

! create dst_farray, dstArray, and dstField
! +--------+--------+--------+--------+
!      0        0        0        0            ! value
```

```
! 1        4        8        12       16       ! bounds
allocate(dst_farray(fa_shape(1)) )
dst_farray = 0
dstArray = ESMF_ArrayCreate(distgrid, dst_farray, &
            indexflag=ESMF_INDEX_DELOCAL, rc=rc)
if (rc /= ESMF_SUCCESS) call ESMF_Finalize(endflag=ESMF_END_ABORT)

dstField = ESMF_FieldCreate(grid, dstArray, rc=rc)
if (rc /= ESMF_SUCCESS) call ESMF_Finalize(endflag=ESMF_END_ABORT)

! perform sparse matrix multiplication
! 1. setup routehandle from source Field to destination Field
! initialize factorList and factorIndexList
allocate(factorList(4))
allocate(factorIndexList(2,4))
factorList = (/1,2,3,4/)
factorIndexList(1,:) = (/lpe*4+1,lpe*4+2,lpe*4+3,lpe*4+4/)
factorIndexList(2,:) = (/lpe*4+1,lpe*4+2,lpe*4+3,lpe*4+4/)

call ESMF_FieldSMMStore(srcField, dstField, routehandle, &
    factorList, factorIndexList, rc=localrc)
if (localrc /= ESMF_SUCCESS) call ESMF_Finalize(endflag=ESMF_END_ABORT)

! 2. use precomputed routehandle to perform SMM
call ESMF_FieldSMM(srcfield, dstField, routehandle, rc=rc)
if (rc /= ESMF_SUCCESS) call ESMF_Finalize(endflag=ESMF_END_ABORT)

! verify sparse matrix multiplication
call ESMF_FieldGet(dstField, localDe=0, farrayPtr=fptr, rc=rc)
if (rc /= ESMF_SUCCESS) call ESMF_Finalize(endflag=ESMF_END_ABORT)

! Verify that the result data in dstField is correct.
! Before the SMM op, the dst Field contains all 0.
! The SMM op reset the values to the index value, verify this is the case.
! +--------+--------+--------+--------+
!  1 2 3 4  2 4 6 8  3 6 9 12  4 8 12 16       ! value
! 1        4        8        12       16       ! bounds
do i = lbound(fptr, 1), ubound(fptr, 1)
    if(fptr(i) /= i*(lpe+1)) rc = ESMF_FAILURE
enddo
```

Field sparse matrix multiplication can also be applied between Fields that matche the original Fields in *type*, *kind*, and memory layout of the *gridded* dimensions. However, the size, number, and index order of *ungridded* dimensions may be different. See section 38.2.5 for a more detailed discussion of RouteHandle reusability

```
call ESMF_ArraySpecSet(arrayspec, typekind=ESMF_TYPEKIND_I4, rank=2, rc=rc)
```

Create two fields with ungridded dimensions using the Grid created previously. The new Field pair has matching number of elements. The ungridded dimension is mapped to the first dimension of either Field.

```
srcFieldA = ESMF_FieldCreate(grid, arrayspec, gridToFieldMap=(/2/), &
    ungriddedLBound=(/1/), ungriddedUBound=(/10/), rc=rc)

dstFieldA = ESMF_FieldCreate(grid, arrayspec, gridToFieldMap=(/2/), &
    ungriddedLBound=(/1/), ungriddedUBound=(/10/), rc=rc)
```

Using the previously computed routehandle, the sparse matrix multiplication can be performed between the Fields.

```
call ESMF_FieldSMM(srcfieldA, dstFieldA, routehandle, rc=rc)

! release route handle
call ESMF_FieldSMMRelease(routehandle, rc=rc)
```

In the following discussion, we demonstrate how to set up a SMM routehandle between a pair of Fields that are different in number of gridded dimensions and the size of those gridded dimensions. The source Field has a 1D decomposition with 16 total elements; the destination Field has a 2D decomposition with 12 total elements. For ease of understanding of the actual matrix calculation, a global indexing scheme is used.

```
distgrid = ESMF_DistGridCreate(minIndex=(/1/), maxIndex=(/16/), &
    indexflag=ESMF_INDEX_GLOBAL, &
    regDecomp=(/4/), &
    rc=rc)
if (rc /= ESMF_SUCCESS) call ESMF_Finalize(endflag=ESMF_END_ABORT)

grid = ESMF_GridCreate(distgrid=distgrid, &
    indexflag=ESMF_INDEX_GLOBAL, &
    name="grid", rc=rc)
if (rc /= ESMF_SUCCESS) call ESMF_Finalize(endflag=ESMF_END_ABORT)

call ESMF_GridGetFieldBounds(grid, localDe=0, totalLBound=tlb, &
                  totalUBound=tub, rc=rc)
if (rc /= ESMF_SUCCESS) call ESMF_Finalize(endflag=ESMF_END_ABORT)
```

create 1D src_farray, srcArray, and srcField

```
+  PET0  +  PET1  +  PET2  +  PET3  +
+--------+--------+--------+--------+
     1        2        3        4            ! value
1        4        8        12       16       ! bounds of seq indices


 allocate(src_farray2(tlb(1):tub(1)) )
 src_farray2 = lpe+1
 srcArray = ESMF_ArrayCreate(distgrid, src_farray2, &
              indexflag=ESMF_INDEX_GLOBAL, &
   rc=rc)
 if (rc /= ESMF_SUCCESS) call ESMF_Finalize(endflag=ESMF_END_ABORT)
 !print *, lpe, '+', tlb, tub, '+', src_farray2

 srcField = ESMF_FieldCreate(grid, srcArray, rc=rc)
 if (rc /= ESMF_SUCCESS) call ESMF_Finalize(endflag=ESMF_END_ABORT)
```

Create 2D dstField on the following distribution (numbers are the sequence indices):

```
+  PET0  +  PET1  +  PET2  +  PET3  +
+--------+--------+--------+--------+
|        |        |        |        |
```

```
|   1    |   4    |   7    |   10   |
|        |        |        |        |
+--------+--------+--------+--------+
|        |        |        |        |
|   2    |   5    |   8    |   11   |
|        |        |        |        |
+--------+--------+--------+--------+
|        |        |        |        |
|   3    |   6    |   9    |   12   |
|        |        |        |        |
+--------+--------+--------+--------+
```

```
! Create the destination Grid
dstGrid = ESMF_GridCreateNoPeriDim(minIndex=(/1,1/), maxIndex=(/3,4/), &
  indexflag = ESMF_INDEX_GLOBAL, &
  regDecomp = (/1,4/), &
  rc=rc)
if (rc /= ESMF_SUCCESS) call ESMF_Finalize(endflag=ESMF_END_ABORT)

dstField = ESMF_FieldCreate(dstGrid, typekind=ESMF_TYPEKIND_R4, &
  indexflag=ESMF_INDEX_GLOBAL, &
  rc=rc)
if (rc /= ESMF_SUCCESS) call ESMF_Finalize(endflag=ESMF_END_ABORT)
```

Perform sparse matrix multiplication dst_i = $M_{i,j}$ * src_j First setup routehandle from source Field to destination Field with prescribed factorList and factorIndexList.

The sparse matrix is of size 12x16, however only the following entries are filled:

```
M(3,1) = 0.1
M(3,10) = 0.4
M(8,2) = 0.25
M(8,16) = 0.5
M(12,1) = 0.3
M(12,16) = 0.7
```

By the definition of matrix calculation, the 8th element on PET2 in the dstField equals to 0.25*srcField(2) + 0.5*srcField(16) = 0.25*1+0.5*4=2.25 For simplicity, we will load the factorList and factorIndexList on PET 0 and 1, the SMMStore engine will load balance the parameters on all 4 PETs internally for optimal performance.

```
if(lpe == 0) then
  allocate(factorList(3), factorIndexList(2,3))
  factorList=(/0.1,0.4,0.25/)
  factorIndexList(1,:)=(/1,10,2/)
  factorIndexList(2,:)=(/3,3,8/)
  call ESMF_FieldSMMStore(srcField, dstField, routehandle=routehandle, &
      factorList=factorList, factorIndexList=factorIndexList, rc=localrc)
  if (localrc /= ESMF_SUCCESS) call ESMF_Finalize(endflag=ESMF_END_ABORT)
else if(lpe == 1) then
  allocate(factorList(3), factorIndexList(2,3))
  factorList=(/0.5,0.3,0.7/)
```

```
    factorIndexList(1,:)=(/16,1,16/)
    factorIndexList(2,:)=(/8,12,12/)
    call ESMF_FieldSMMStore(srcField, dstField, routehandle=routehandle, &
        factorList=factorList, factorIndexList=factorIndexList, rc=localrc)
    if (localrc /= ESMF_SUCCESS) call ESMF_Finalize(endflag=ESMF_END_ABORT)
  else
    call ESMF_FieldSMMStore(srcField, dstField, routehandle=routehandle, &
        rc=localrc)
    if (localrc /= ESMF_SUCCESS) call ESMF_Finalize(endflag=ESMF_END_ABORT)
  endif

  ! 2. use precomputed routehandle to perform SMM
  call ESMF_FieldSMM(srcfield, dstField, routehandle=routehandle, rc=rc)
  if (rc /= ESMF_SUCCESS) call ESMF_Finalize(endflag=ESMF_END_ABORT)
```

27.3.34 Field Halo solving a domain decomposed heat transfer problem

The `ESMF_FieldHalo()` interface can be used to perform halo updates for a Field. This eases communication programming from a user perspective. By definition, the user program only needs to update locally owned exclusive region in each domain, then call FieldHalo to communicate the values in the halo region from/to neighboring domain elements. In this example, we solve a 1D heat transfer problem: $u_t = \alpha^2 u_{xx}$ with the initial condition $u(0,x) = 20$ and boundary conditions $u(t,0) = 10, u(t,1) = 40$. The temperature field u is represented by a `ESMF_Field`. A finite difference explicit time stepping scheme is employed. During each time step, FieldHalo update is called to communicate values in the halo region to neighboring domain elements. The steady state (as $t \to \infty$) solution is a linear temperature profile along x. The numerical solution is an approximation of the steady state solution. It can be verified to represent a linear temperature profile.

Section 29.2.15 provides a discussion of the halo operation implemented in `ESMF_Array`.

```
! create 1D distgrid and grid decomposed according to the following diagram:
! +------------+   +----------------+   +---------------+   +--------------+
! |   DE 0  |  |   |  |   DE 1   |  |   |  |   DE 2  |  |   |  |   DE 3    |
! |  1 x 16 |  |   |  |  1 x 16  |  |   |  |  1 x 16 |  |   |  |  1 x 16   |
! |         | 1|<->|1 |          | 1|<->|1 |         | 1|<->|1 |           |
! |         |  |   |  |          |  |   |  |         |  |   |  |           |
! +------------+   +----------------+   +---------------+   +--------------+
    distgrid = ESMF_DistGridCreate(minIndex=(/1/), maxIndex=(/npx/), &
        regDecomp=(/4/), rc=rc)
    if (rc /= ESMF_SUCCESS) call ESMF_Finalize(endflag=ESMF_END_ABORT)

    grid = ESMF_GridCreate(distgrid=distgrid, name="grid", rc=rc)
    if (rc /= ESMF_SUCCESS) call ESMF_Finalize(endflag=ESMF_END_ABORT)

    ! set up initial condition and boundary conditions of the
    ! temperature Field
    if(lpe == 0) then
        allocate(fptr(17), tmp_farray(17))
        fptr = 20.
        fptr(1) = 10.
        tmp_farray(1) = 10.
        startx = 2
        endx = 16

        field = ESMF_FieldCreate(grid, fptr, totalUWidth=(/1/), &
```

```
            name="temperature", rc=rc)
    if (rc /= ESMF_SUCCESS) call ESMF_Finalize(endflag=ESMF_END_ABORT)
else if(lpe == 3) then
    allocate(fptr(17), tmp_farray(17))
    fptr = 20.
    fptr(17) = 40.
    tmp_farray(17) = 40.
    startx = 2
    endx = 16

    field = ESMF_FieldCreate(grid, fptr, totalLWidth=(/1/), &
            name="temperature", rc=rc)
    if (rc /= ESMF_SUCCESS) call ESMF_Finalize(endflag=ESMF_END_ABORT)
else
    allocate(fptr(18), tmp_farray(18))
    fptr = 20.
    startx = 2
    endx = 17

    field = ESMF_FieldCreate(grid, fptr, &
        totalLWidth=(/1/), totalUWidth=(/1/), name="temperature", rc=rc)
    if (rc /= ESMF_SUCCESS) call ESMF_Finalize(endflag=ESMF_END_ABORT)
endif

! compute the halo update routehandle of the decomposed temperature Field
call ESMF_FieldHaloStore(field, routehandle=routehandle, rc=rc)
if (rc /= ESMF_SUCCESS) call ESMF_Finalize(endflag=ESMF_END_ABORT)

dt = 0.01
dx = 1./npx
alpha = 0.1

! Employ explicit time stepping
! Solution converges after about 9000 steps based on apriori knowledge.
! The result is a linear temperature profile stored in field.
do iter = 1, 9000
 ! only elements in the exclusive region are updated locally
 ! in each domain
 do i = startx, endx
   tmp_farray(i) = &
   fptr(i)+alpha*alpha*dt/dx/dx*(fptr(i+1)-2.*fptr(i)+fptr(i-1))
  enddo
  fptr = tmp_farray
 ! call halo update to communicate the values in the halo region to
 ! neighboring domains
 call ESMF_FieldHalo(field, routehandle=routehandle, rc=rc)
 if (rc /= ESMF_SUCCESS) call ESMF_Finalize(endflag=ESMF_END_ABORT)
enddo

! release the halo routehandle
call ESMF_FieldHaloRelease(routehandle, rc=rc)
```

27.4 Restrictions and Future Work

1. **CAUTION:** It depends on the specific entry point of `ESMF_FieldCreate()` used during Field creation, which Fortran operations are supported on the Fortran array pointer `farrayPtr`, returned by `ESMF_FieldGet()`. Only if the `ESMF_FieldCreate()` *from pointer* variant was used, will the returned `farrayPtr` variable contain the original bounds information, and be suitable for the Fortran `deallocate()` call. This limitation is a direct consequence of the Fortran 95 standard relating to the passing of array arguments.

2. **No mathematical operators.** The Fields class does not currently support advanced operations on fields, such as differential or other mathematical operators.

27.5 Design and Implementation Notes

1. Some methods which have a Field interface are actually implemented at the underlying Grid or Array level; they are inherited by the Field class. This allows the user API (Application Programming Interface) to present functions at the level which is most consistent to the application without restricting where inside the ESMF the actual implementation is done.

2. The Field class is implemented in Fortran, and as such is defined inside the framework by a Field derived type and a set of subprograms (functions and subroutines) which operate on that derived type. The Field class itself is very thin; it is a container class which groups a Grid and an Array object together.

3. Fields follow the framework-wide convention of the *unison* creation and operation rule: All PETs which are part of the currently executing VM must create the same Fields at the same point in their execution. Since an early user request was that global object creation not impose the overhead of a barrier or synchronization point, Field creation does no inter-PET communication. For this to work, each PET must query the total number of PETs in this VM, and which local PET number it is. It can then compute which DE(s) are part of the local decomposition, and any global information can be computed in unison by all PETs independently of the others. In this way the overhead of communication is avoided, at the cost of more difficulty in diagnosing program bugs which result from not all PETs executing the same create calls.

4. Related to the item above, the user request to not impose inter-PET communication at object creation time means that requirement FLD 1.5.1, that all Fields will have unique names, and if not specified, the framework will generate a unique name for it, is difficult or impossible to support. A part of this requirement has been implemented; a unique object counter is maintained in the Base object class, and if a name is not given at create time a name such as "Field003" is generated which is guaranteed to not be repeated by the framework. However, it is impossible to error check that the user has not replicated a name, and it is possible under certain conditions that if not all PETs have created the same number of objects, that the counters on different PETs may not stay synchronized. This remains an open issue.

27.6 Class API

27.6.1 ESMF_FieldAssignment(=) - Field assignment

INTERFACE:

```
interface assignment(=)
field1 = field2
```

ARGUMENTS:

```
type(ESMF_Field) :: field1
type(ESMF_Field) :: field2
```

STATUS:

- This interface is backward compatible with ESMF versions starting at 5.2.0r. If code using this interface compiles with any version of ESMF starting with 5.2.0r, then it will compile with the current version.

DESCRIPTION:

Assign field1 as an alias to the same ESMF Field object in memory as field2. If field2 is invalid, then field1 will be equally invalid after the assignment.

The arguments are:

field1 The `ESMF_Field` object on the left hand side of the assignment.

field2 The `ESMF_Field` object on the right hand side of the assignment.

27.6.2 ESMF_FieldOperator(==) - Field equality operator

INTERFACE:

```
interface operator(==)
if (field1 == field2) then ... endif
OR
result = (field1 == field2)
```

RETURN VALUE:

```
logical :: result
```

ARGUMENTS:

```
type(ESMF_Field), intent(in) :: field1
type(ESMF_Field), intent(in) :: field2
```

STATUS:

- This interface is backward compatible with ESMF versions starting at 5.2.0r. If code using this interface compiles with any version of ESMF starting with 5.2.0r, then it will compile with the current version.

DESCRIPTION:

Test whether field1 and field2 are valid aliases to the same ESMF Field object in memory. For a more general comparison of two ESMF Fields, going beyond the simple alias test, the ESMF_FieldMatch() function (not yet implemented) must be used.

The arguments are:

field1 The `ESMF_Field` object on the left hand side of the equality operation.

field2 The `ESMF_Field` object on the right hand side of the equality operation.

27.6.3 ESMF_FieldOperator(/=) - Field not equal operator

INTERFACE:

```
interface operator(/=)
if (field1 /= field2) then ... endif
OR
result = (field1 /= field2)
```

RETURN VALUE:

```
logical :: result
```

ARGUMENTS:

```
type(ESMF_Field), intent(in) :: field1
type(ESMF_Field), intent(in) :: field2
```

STATUS:

- This interface is backward compatible with ESMF versions starting at 5.2.0r. If code using this interface compiles with any version of ESMF starting with 5.2.0r, then it will compile with the current version.

DESCRIPTION:

Test whether field1 and field2 are *not* valid aliases to the same ESMF Field object in memory. For a more general comparison of two ESMF Fields, going beyond the simple alias test, the ESMF_FieldMatch() function (not yet implemented) must be used.

The arguments are:

field1 The `ESMF_Field` object on the left hand side of the non-equality operation.

field2 The `ESMF_Field` object on the right hand side of the non-equality operation.

27.6.4 ESMF_FieldCopy - Copy data from one Field object to another

INTERFACE:

```
subroutine ESMF_FieldCopy(fieldOut, fieldIn, rc)
```

ARGUMENTS:

```
        type(ESMF_Field), intent(inout) :: fieldOut
        type(ESMF_Field), intent(in) :: fieldIn
 -- The following arguments require argument keyword syntax (e.g. rc=rc). --
        integer, intent(out), optional :: rc
```

DESCRIPTION:

Copy data from one `ESMF_Field` object to another.

The arguments are:

fieldOut `ESMF_Field` object into which to copy the data. The incoming `fieldOut` must already references a matching memory allocation.

fieldIn `ESMF_Field` object that holds the data to be copied.

[rc] Return code; equals `ESMF_SUCCESS` if there are no errors.

27.6.5 ESMF_FieldCreate - Create a Field from Geom and typekind

INTERFACE:

```
   ! Private name; call using ESMF_FieldCreate()
 function ESMF_FieldCreateGBTKR(geom, typekind, &
      gridToFieldMap, ungriddedLBound, ungriddedUBound, &
      totalLWidth, totalUWidth, pinflag, name, rc)
```

RETURN VALUE:

```
     type(ESMF_Field) :: ESMF_FieldCreateGBTKR
```

ARGUMENTS:

```
     type(ESMF_Geom), intent(in) :: geom
     type(ESMF_TypeKind_Flag),intent(in) :: typekind
 -- The following arguments require argument keyword syntax (e.g. rc=rc). --
     integer, intent(in), optional :: gridToFieldMap(:)
     integer, intent(in), optional :: ungriddedLBound(:)
     integer, intent(in), optional :: ungriddedUBound(:)
     integer, intent(in), optional :: totalLWidth(:)
     integer, intent(in), optional :: totalUWidth(:)
     type(ESMF_Pin_Flag), intent(in), optional :: pinflag
     character (len=*), intent(in), optional :: name
     integer, intent(out), optional :: rc
```

DESCRIPTION:

Create an `ESMF_Field` and allocate space internally for an `ESMF_Array`. Return a new `ESMF_Field`. For an example and associated documentation using this method see section 27.3.4.

The arguments are:

geom `ESMF_Geom` object.

typekind The typekind of the Field. See section 55.61 for a list of valid typekind options.

[gridToFieldMap] List with number of elements equal to the `grid`'s dimCount. The list elements map each dimension of the `grid` to a dimension in the `field` by specifying the appropriate `field` dimension index. The default is to map all of the `grid`'s dimensions against the lowest dimensions of the `field` in sequence, i.e. `gridToFieldMap` = (/1,2,3,.../). The values of all `gridToFieldMap` entries must be greater than or equal to one and smaller than or equal to the `field` rank. It is erroneous to specify the same `gridToFieldMap` entry multiple times. The total ungridded dimensions in the `field` are the total `field` dimensions less the dimensions in the `grid`. Ungridded dimensions must be in the same order they are stored in the field. If the Field dimCount is less than the Grid dimCount then the default gridToFieldMap will contain zeros for the rightmost entries. A zero entry in the `gridToFieldMap` indicates that the particular Grid dimension will be replicating the Field across the DEs along this direction.

[ungriddedLBound] Lower bounds of the ungridded dimensions of the `field`. The number of elements in the `ungriddedLBound` is equal to the number of ungridded dimensions in the `field`. All ungridded dimensions of the `field` are also undistributed. When field dimension count is greater than grid dimension count, both ungriddedLBound and ungriddedUBound must be specified. When both are specified the values are checked for consistency. Note that the the ordering of these ungridded dimensions is the same as their order in the `field`.

[ungriddedUBound] Upper bounds of the ungridded dimensions of the `field`. The number of elements in the `ungriddedUBound` is equal to the number of ungridded dimensions in the `field`. All ungridded dimensions of the `field` are also undistributed. When field dimension count is greater than grid dimension count, both ungriddedLBound and ungriddedUBound must be specified. When both are specified the values are checked for consistency. Note that the the ordering of these ungridded dimensions is the same as their order in the `field`.

[totalLWidth] Lower bound of halo region. The size of this array is the number of gridded dimensions in the Field. However, ordering of the elements needs to be the same as they appear in the `field`. Values default to 0. If values for totalLWidth are specified they must be reflected in the size of the `field`. That is, for each gridded dimension the `field` size should be max(`totalLWidth` + `totalUWidth` + `computationalCount`, `exclusiveCount`).

[totalUWidth] Upper bound of halo region. The size of this array is the number of gridded dimensions in the Field. However, ordering of the elements needs to be the same as they appear in the `field`. Values default to 0. If values for totalUWidth are specified they must be reflected in the size of the `field`. That is, for each gridded dimension the `field` size should max(`totalLWidth` + `totalUWidth` + `computationalCount`, `exclusiveCount`).

[pinflag] Specify which type of resource DEs are pinned to. See section 51.2.1 for a list of valid pinning options. The default is to pin DEs to PETs, i.e. only the PET on which a DE was created considers the DE as local.

[name] Field name.

[rc] Return code; equals `ESMF_SUCCESS` if there are no errors.

27.6.6 ESMF_FieldCreate - Create a Field from Geom and ArraySpec

INTERFACE:

```
! Private name; call using ESMF_FieldCreate()
function ESMF_FieldCreateGBArraySpec(geom, arrayspec, gridToFieldMap, &
  ungriddedLBound, ungriddedUBound, totalLWidth, totalUWidth, &
  pinflag, name, rc)
```

RETURN VALUE:

```
type(ESMF_Field) :: ESMF_FieldCreateGBArraySpec
```

ARGUMENTS:

```
type(ESMF_Geom) :: geom
type(ESMF_ArraySpec), intent(in) :: arrayspec
integer, intent(in), optional :: gridToFieldMap(:)
integer, intent(in), optional :: ungriddedLBound(:)
integer, intent(in), optional :: ungriddedUBound(:)
integer, intent(in), optional :: totalLWidth(:)
integer, intent(in), optional :: totalUWidth(:)
type(ESMF_Pin_Flag), intent(in), optional :: pinflag
character (len=*), intent(in), optional :: name
integer, intent(out), optional :: rc
```

DESCRIPTION:

Create an `ESMF_Field` and allocate space internally for an `ESMF_Array`. Return a new `ESMF_Field`. For an example and associated documentation using this method see section 27.3.5.

The arguments are:

geom `ESMF_Geom` object.

arrayspec Data type and kind specification.

[gridToFieldMap] List with number of elements equal to the `grid`'s dimCount. The list elements map each dimension of the `grid` to a dimension in the `field` by specifying the appropriate `field` dimension index. The default is to map all of the `grid`'s dimensions against the lowest dimensions of the `field` in sequence, i.e. `gridToFieldMap` = (/1,2,3,.../). The values of all `gridToFieldMap` entries must be greater than or equal to one and smaller than or equal to the `field` rank. It is erroneous to specify the same `gridToFieldMap` entry multiple times. The total ungridded dimensions in the `field` are the total `field` dimensions less the dimensions in the `grid`. Ungridded dimensions must be in the same order they are stored in the field.

[ungriddedLBound] Lower bounds of the ungridded dimensions of the `field`. The number of elements in the `ungriddedLBound` is equal to the number of ungridded dimensions in the `field`. All ungridded dimensions of the `field` are also undistributed. When field dimension count is greater than grid dimension count, both ungriddedLBound and ungriddedUBound must be specified. When both are specified the values are checked for consistency. Note that the the ordering of these ungridded dimensions is the same as their order in the `field`.

[ungriddedUBound] Upper bounds of the ungridded dimensions of the `field`. The number of elements in the `ungriddedUBound` is equal to the number of ungridded dimensions in the `field`. All ungridded dimensions of the `field` are also undistributed. When field dimension count is greater than grid dimension count, both ungriddedLBound and ungriddedUBound must be specified. When both are specified the values are checked for consistency. Note that the the ordering of these ungridded dimensions is the same as their order in the `field`.

[totalLWidth] Lower bound of halo region. The size of this array is the number of gridded dimensions in the Field. However, ordering of the elements needs to be the same as they appear in the `field`. Values default to 0. If

values for totalLWidth are specified they must be reflected in the size of the `field`. That is, for each gridded dimension the `field` size should be max(`totalLWidth` + `totalUWidth` + `computationalCount`, `exclusiveCount`).

[totalUWidth] Upper bound of halo region. The size of this array is the number of gridded dimensions in the Field. However, ordering of the elements needs to be the same as they appear in the `field`. Values default to 0. If values for totalUWidth are specified they must be reflected in the size of the `field`. That is, for each gridded dimension the `field` size should max(`totalLWidth` + `totalUWidth` + `computationalCount`, `exclusiveCount`).

[pinflag] Specify which type of resource DEs are pinned to. See section 51.2.1 for a list of valid pinning options. The default is to pin DEs to PETs, i.e. only the PET on which a DE was created considers the DE as local.

[name] Field name.

[rc] Return code; equals `ESMF_SUCCESS` if there are no errors.

27.6.7 ESMF_FieldCreate - Create a Field from Geom and Array

INTERFACE:

```
! Private name; call using ESMF_FieldCreate()
function ESMF_FieldCreateGBArray(geom, array, datacopyflag, &
  gridToFieldMap, ungriddedLBound, ungriddedUBound, &
  totalLWidth, totalUWidth, name, vm, rc)
```

RETURN VALUE:

```
type(ESMF_Field) :: ESMF_FieldCreateGBArray
```

ARGUMENTS:

```
type(ESMF_Geom), intent(in) :: geom
type(ESMF_Array), intent(in) :: array
type(ESMF_DataCopy_Flag), intent(in), optional :: datacopyflag
integer, intent(in), optional :: gridToFieldMap(:)
integer, intent(in), optional :: ungriddedLBound(:)
integer, intent(in), optional :: ungriddedUBound(:)
integer, intent(in), optional :: totalLWidth(:)
integer, intent(in), optional :: totalUWidth(:)
character (len = *), intent(in), optional :: name
type(ESMF_VM), intent(in), optional :: vm
integer, intent(out), optional :: rc
```

DESCRIPTION:

Create an `ESMF_Field`. This version of creation assumes the data exists already and is being passed in through an `ESMF_Array`. For an example and associated documentation using this method see section 27.3.6.

The arguments are:

geom `ESMF_Geom` object.

array `ESMF_Array` object.

[datacopyflag] Indicates whether to copy the contents of the `array` or reference it directly. For valid values see 55.13. The default is `ESMF_DATACOPY_REFERENCE`.

[gridToFieldMap] List with number of elements equal to the `grid`'s dimCount. The list elements map each dimension of the `grid` to a dimension in the `field` by specifying the appropriate `field` dimension index. The default is to map all of the `grid`'s dimensions against the lowest dimensions of the `field` in sequence, i.e. `gridToFieldMap` = (/1,2,3,.../). The values of all `gridToFieldMap` entries must be greater than or equal to one and smaller than or equal to the `field` rank. It is erroneous to specify the same `gridToFieldMap` entry multiple times. The total ungridded dimensions in the `field` are the total `field` dimensions less the dimensions in the `grid`. Ungridded dimensions must be in the same order they are stored in the field.

[ungriddedLBound] Lower bounds of the ungridded dimensions of the `field`. The number of elements in the `ungriddedLBound` is equal to the number of ungridded dimensions in the `field`. All ungridded dimensions of the `field` are also undistributed. When field dimension count is greater than grid dimension count, both ungriddedLBound and ungriddedUBound must be specified. When both are specified the values are checked for consistency. Note that the the ordering of these ungridded dimensions is the same as their order in the `field`.

[ungriddedUBound] Upper bounds of the ungridded dimensions of the `field`. The number of elements in the `ungriddedUBound` is equal to the number of ungridded dimensions in the `field`. All ungridded dimensions of the `field` are also undistributed. When field dimension count is greater than grid dimension count, both ungriddedLBound and ungriddedUBound must be specified. When both are specified the values are checked for consistency. Note that the the ordering of these ungridded dimensions is the same as their order in the `field`.

[totalLWidth] Lower bound of halo region. The size of this array is the number of gridded dimensions in the Field. However, ordering of the elements needs to be the same as they appear in the `field`. Values default to 0. If values for totalLWidth are specified they must be reflected in the size of the `field`. That is, for each gridded dimension the `field` size should be max(`totalLWidth` + `totalUWidth` + `computationalCount`, `exclusiveCount`).

[totalUWidth] Upper bound of halo region. The size of this array is the number of gridded dimensions in the Field. However, ordering of the elements needs to be the same as they appear in the `field`. Values default to 0. If values for totalUWidth are specified they must be reflected in the size of the `field`. That is, for each gridded dimension the `field` size should max(`totalLWidth` + `totalUWidth` + `computationalCount`, `exclusiveCount`).

[name] Field name.

[vm] If present, the Field object is created on the specified `ESMF_VM` object. The default is to create on the VM of the current component context.

[rc] Return code; equals `ESMF_SUCCESS` if there are no errors.

27.6.8 ESMF_FieldCreate - Create a Field from Geom and Fortran array

INTERFACE:

```
! Private name; call using ESMF_FieldCreate()
function ESMF_FieldCreateGBData<rank><type><kind>(geom, &
farray, indexflag, datacopyflag, gridToFieldMap, ungriddedLBound, &
ungriddedUBound, totalLWidth, totalUWidth, name, rc)
```

RETURN VALUE:

```
type(ESMF_Field) :: ESMF_FieldCreateGBData<rank><type><kind>
```

ARGUMENTS:

```
type(ESMF_Geom) :: geom
<type> (ESMF_KIND_<kind>), dimension(<rank>), target :: farray
type(ESMF_Index_Flag), intent(in) :: indexflag
type(ESMF_DataCopy_Flag), intent(in), optional :: datacopyflag
integer, intent(in), optional :: gridToFieldMap(:)
integer, intent(in), optional :: ungriddedLBound(:)
integer, intent(in), optional :: ungriddedUBound(:)
integer, intent(in), optional :: totalLWidth(:)
integer, intent(in), optional :: totalUWidth(:)
character (len=*), intent(in), optional :: name
integer, intent(out), optional :: rc
```

DESCRIPTION:

Create an `ESMF_Field` from a Fortran data array and `ESMF_Geom`. The Fortran data pointer inside `ESMF_Field` can be queried but deallocating the retrieved data pointer is not allowed. The arguments are:

geom `ESMF_Geom` object. The dimCount of the Geom must be smaller than or equal to the rank of the `farray`.

farray Native Fortran data array to be copied/referenced in the Field The Field dimension (dimCount) will be the same as the dimCount for the `farray`.

indexflag Indicate how DE-local indices are defined. See section 55.29 for a list of valid indexflag options.

[datacopyflag] Whether to copy the contents of the `farray` or reference it directly. For valid values see 55.13. The default is `ESMF_DATACOPY_REFERENCE`.

[gridToFieldMap] List with number of elements equal to the `grid`'s dimCount. The list elements map each dimension of the `grid` to a dimension in the `farray` by specifying the appropriate `farray` dimension index. The default is to map all of the `grid`'s dimensions against the lowest dimensions of the `farray` in sequence, i.e. `gridToFieldMap` = (/1,2,3,.../). The values of all `gridToFieldMap` entries must be greater than or equal to one and smaller than or equal to the `farray` rank. It is erroneous to specify the same `gridToFieldMap` entry multiple times. The total ungridded dimensions in the `field` are the total `farray` dimensions less the total (distributed + undistributed) dimensions in the `grid`. Ungridded dimensions must be in the same order they are stored in the farray. Permutations of the order of dimensions are handled via individual communication methods. For example, an undistributed dimension can be remapped to a distributed dimension as part of the `ESMF_ArrayRedist()` operation.

[ungriddedLBound] Lower bounds of the ungridded dimensions of the `field`. The number of elements in the `ungriddedLBound` is equal to the number of ungridded dimensions in the `field`. All ungridded dimensions of the `field` are also undistributed. When field dimension count is greater than grid dimension count, both ungriddedLBound and ungriddedUBound must be specified. When both are specified the values are checked for consistency. Note that the the ordering of these ungridded dimensions is the same as their order in the `farray`.

[ungriddedUBound] Upper bounds of the ungridded dimensions of the `field`. The number of elements in the `ungriddedUBound` is equal to the number of ungridded dimensions in the `field`. All ungridded dimensions of the `field` are also undistributed. When field dimension count is greater than grid dimension count, both ungriddedLBound and ungriddedUBound must be specified. When both are specified the values are checked for consistency. Note that the the ordering of these ungridded dimensions is the same as their order in the `farray`.

[totalLWidth] Lower bound of halo region. The size of this array is the number of gridded dimensions in the Field. However, ordering of the elements needs to be the same as they appear in the `farray`. Values default to 0. If values for totalLWidth are specified they must be reflected in the size of the `farray`. That is, for each gridded dimension the `farray` size should be max(`totalLWidth` + `totalUWidth` + `computationalCount`, `exclusiveCount`).

[totalUWidth] Upper bound of halo region. The size of this array is the number of gridded dimensions in the Field. However, ordering of the elements needs to be the same as they appear in the `farray`. Values default to 0. If values for totalUWidth are specified they must be reflected in the size of the `farray`. That is, for each gridded dimension the `farray` size should max(`totalLWidth` + `totalUWidth` + `computationalCount`, `exclusiveCount`).

[name] Field name.

[rc] Return code; equals `ESMF_SUCCESS` if there are no errors.

27.6.9 ESMF_FieldCreate - Create a Field from Geom and Fortran array pointer

INTERFACE:

```
! Private name; call using ESMF_FieldCreate()
function ESMF_FieldCreateGBDataPtr<rank><type><kind>(geom, &
farrayPtr, datacopyflag, gridToFieldMap, &
totalLWidth, totalUWidth, name, rc)
```

RETURN VALUE:

```
type(ESMF_Field) :: ESMF_FieldCreateGBDataPtr<rank><type><kind>
```

ARGUMENTS:

```
type(ESMF_Geom) :: geom
<type> (ESMF_KIND_<kind>), dimension(<rank>), pointer :: farrayPtr
type(ESMF_DataCopy_Flag), intent(in), optional :: datacopyflag
integer, intent(in), optional :: gridToFieldMap(:)
integer, intent(in), optional :: totalLWidth(:)
integer, intent(in), optional :: totalUWidth(:)
character (len=*), intent(in), optional :: name
integer, intent(out), optional :: rc
```

DESCRIPTION:

Create an `ESMF_Field` from a Fortran data pointer and `ESMF_Geom`. The Fortran data pointer inside `ESMF_Field` can be queried and deallocated when datacopyflag is `ESMF_DATACOPY_REFERENCE`. Note that the `ESMF_FieldDestroy` call does not deallocate the Fortran data pointer in this case. This gives user more flexibility over memory management.

The arguments are:

geom `ESMF_Geom` object. The dimCount of the Geom must be smaller than or equal to the rank of the `farrayPtr`.

farrayPtr Native Fortran data pointer to be copied/referenced in the Field The Field dimension (dimCount) will be the same as the dimCount for the `farrayPtr`.

[datacopyflag] Whether to copy the contents of the `farrayPtr` or reference it directly. For valid values see 55.13. The default is `ESMF_DATACOPY_REFERENCE`.

[gridToFieldMap] List with number of elements equal to the `grid`'s dimCount. The list elements map each dimension of the `grid` to a dimension in the `farrayPtr` by specifying the appropriate `farrayPtr` dimension index. The default is to map all of the `grid`'s dimensions against the lowest dimensions of the `farrayPtr` in sequence, i.e. `gridToFieldMap` = (/1,2,3,.../). The values of all `gridToFieldMap` entries must be greater than or equal to one and smaller than or equal to the `farrayPtr` rank. It is erroneous to specify the same `gridToFieldMap` entry multiple times. The total ungridded dimensions in the `field` are the total `farrayPtr` dimensions less the total (distributed + undistributed) dimensions in the `grid`. Ungridded dimensions must be in the same order they are stored in the farrayPtr. Permutations of the order of dimensions are handled via individual communication methods. For example, an undistributed dimension can be remapped to a distributed dimension as part of the `ESMF_ArrayRedist()` operation.

[totalLWidth] Lower bound of halo region. The size of this array is the number of gridded dimensions in the Field. However, ordering of the elements needs to be the same as they appear in the `farrayPtr`. Values default to 0. If values for totalLWidth are specified they must be reflected in the size of the `farrayPtr`. That is, for each gridded dimension the `farrayPtr` size should be max(`totalLWidth` + `totalUWidth` + `computationalCount`, `exclusiveCount`).

[totalUWidth] Upper bound of halo region. The size of this array is the number of gridded dimensions in the Field. However, ordering of the elements needs to be the same as they appear in the `farrayPtr`. Values default to 0. If values for totalUWidth are specified they must be reflected in the size of the `farrayPtr`. That is, for each gridded dimension the `farrayPtr` size should max(`totalLWidth` + `totalUWidth` + `computationalCount`, `exclusiveCount`).

[name] Field name.

[rc] Return code; equals `ESMF_SUCCESS` if there are no errors.

27.6.10 ESMF_FieldCreate - Create a Field from Grid and typekind

INTERFACE:

```
! Private name; call using ESMF_FieldCreate()
function ESMF_FieldCreateGridTKR(grid, typekind, &
  indexflag, staggerloc, gridToFieldMap, ungriddedLBound, ungriddedUBound, &
  totalLWidth, totalUWidth, pinflag, name, rc)
```

RETURN VALUE:

```
type(ESMF_Field) :: ESMF_FieldCreateGridTKR
```

ARGUMENTS:

```
    type(ESMF_Grid), intent(in) :: grid
    type(ESMF_TypeKind_Flag),intent(in) :: typekind
-- The following arguments require argument keyword syntax (e.g. rc=rc). --
    type(ESMF_Index_Flag), intent(in), optional :: indexflag
    type(ESMF_StaggerLoc), intent(in), optional :: staggerloc
    integer, intent(in), optional :: gridToFieldMap(:)
    integer, intent(in), optional :: ungriddedLBound(:)
    integer, intent(in), optional :: ungriddedUBound(:)
    integer, intent(in), optional :: totalLWidth(:)
    integer, intent(in), optional :: totalUWidth(:)
    type(ESMF_Pin_Flag), intent(in), optional :: pinflag
    character (len=*), intent(in), optional :: name
    integer, intent(out), optional :: rc
```

STATUS:

- This interface is backward compatible with ESMF versions starting at 5.2.0r. If code using this interface compiles with any version of ESMF starting with 5.2.0r, then it will compile with the current version.
- This interface was modified since ESMF version 5.2.0r. The fact that code using this interface compiles with the current ESMF version does not guarantee that it compiles with previous versions of this interface. If user code compatibility with version 5.2.0r is desired then care must be taken to limit the use of this interface to features that were available in the 5.2.0r release.
  Changes made after the 5.2.0r release:

  8.1.0 Added argument `pinflag` to provide access to DE sharing between PETs.

DESCRIPTION:

Create an `ESMF_Field` and allocate space internally for an `ESMF_Array`. Return a new `ESMF_Field`. For an example and associated documentation using this method see section 27.3.4.

The arguments are:

grid `ESMF_Grid` object.

typekind The typekind of the Field. See section 55.61 for a list of valid typekind options.

[indexflag] Indicate how DE-local indices are defined. By default each DE's exclusive region is placed to start at the local index space origin, i.e. (1, 1, ..., 1). Alternatively the DE-local index space can be aligned with the global index space, if a global index space is well defined by the associated Grid. See section 55.29 for a list of valid indexflag options. The default indexflag value is the one stored in then `ESMF_Grid` object. Currently it is erroneous to specify an indexflag different from the one stored in the `ESMF_Grid` object. The default value is `ESMF_INDEX_DELOCAL`

[staggerloc] Stagger location of data in grid cells. For valid predefined values see section 32.2.6. To create a custom stagger location see section 32.3.25. The default value is `ESMF_STAGGERLOC_CENTER`.

[gridToFieldMap] List with number of elements equal to the `grid`'s dimCount. The list elements map each dimension of the `grid` to a dimension in the `field` by specifying the appropriate `field` dimension index. The default is to map all of the `grid`'s dimensions against the lowest dimensions of the `field` in sequence, i.e. `gridToFieldMap` = (/1,2,3,.../). The values of all `gridToFieldMap` entries must be greater than or equal to one and smaller than or equal to the `field` rank. It is erroneous to specify the same `gridToFieldMap` entry multiple times. The total ungridded dimensions in the `field` are the total `field` dimensions less the dimensions in the `grid`. Ungridded dimensions must be in the same order they are stored in the field. If the Field dimCount is less than the Grid dimCount then the default gridToFieldMap will contain zeros for the rightmost

entries. A zero entry in the `gridToFieldMap` indicates that the particular Grid dimension will be replicating the Field across the DEs along this direction.

[ungriddedLBound] Lower bounds of the ungridded dimensions of the `field`. The number of elements in the `ungriddedLBound` is equal to the number of ungridded dimensions in the `field`. All ungridded dimensions of the `field` are also undistributed. When field dimension count is greater than grid dimension count, both ungriddedLBound and ungriddedUBound must be specified. When both are specified the values are checked for consistency. Note that the the ordering of these ungridded dimensions is the same as their order in the `field`.

[ungriddedUBound] Upper bounds of the ungridded dimensions of the `field`. The number of elements in the `ungriddedUBound` is equal to the number of ungridded dimensions in the `field`. All ungridded dimensions of the `field` are also undistributed. When field dimension count is greater than grid dimension count, both ungriddedLBound and ungriddedUBound must be specified. When both are specified the values are checked for consistency. Note that the the ordering of these ungridded dimensions is the same as their order in the `field`.

[totalLWidth] Lower bound of halo region. The size of this array is the number of gridded dimensions in the Field. However, ordering of the elements needs to be the same as they appear in the `field`. Values default to 0. If values for totalLWidth are specified they must be reflected in the size of the `field`. That is, for each gridded dimension the `field` size should be max(`totalLWidth` + `totalUWidth` + `computationalCount`, `exclusiveCount`).

[totalUWidth] Upper bound of halo region. The size of this array is the number of gridded dimensions in the Field. However, ordering of the elements needs to be the same as they appear in the `field`. Values default to 0. If values for totalUWidth are specified they must be reflected in the size of the `field`. That is, for each gridded dimension the `field` size should max(`totalLWidth` + `totalUWidth` + `computationalCount`, `exclusiveCount`).

[pinflag] Specify which type of resource DEs are pinned to. See section 51.2.1 for a list of valid pinning options. The default is to pin DEs to PETs, i.e. only the PET on which a DE was created considers the DE as local.

[name] Field name.

[rc] Return code; equals `ESMF_SUCCESS` if there are no errors.

27.6.11 ESMF_FieldCreate - Create a Field from Grid and ArraySpec

INTERFACE:

```
! Private name; call using ESMF_FieldCreate()
function ESMF_FieldCreateGridArraySpec(grid, arrayspec, &
  indexflag, staggerloc, gridToFieldMap, ungriddedLBound, &
  ungriddedUBound, totalLWidth, totalUWidth, pinflag, name, rc)
```

RETURN VALUE:

```
type(ESMF_Field) :: ESMF_FieldCreateGridArraySpec
```

ARGUMENTS:

```
type(ESMF_Grid), intent(in) :: grid
type(ESMF_ArraySpec), intent(in) :: arrayspec
-- The following arguments require argument keyword syntax (e.g. rc=rc). --
```

```
type(ESMF_Index_Flag), intent(in), optional :: indexflag
type(ESMF_StaggerLoc), intent(in), optional :: staggerloc
integer, intent(in), optional :: gridToFieldMap(:)
integer, intent(in), optional :: ungriddedLBound(:)
integer, intent(in), optional :: ungriddedUBound(:)
integer, intent(in), optional :: totalLWidth(:)
integer, intent(in), optional :: totalUWidth(:)
type(ESMF_Pin_Flag), intent(in), optional :: pinflag
character (len=*), intent(in), optional :: name
integer, intent(out), optional :: rc
```

STATUS:

- This interface is backward compatible with ESMF versions starting at 5.2.0r. If code using this interface compiles with any version of ESMF starting with 5.2.0r, then it will compile with the current version.
- This interface was modified since ESMF version 5.2.0r. The fact that code using this interface compiles with the current ESMF version does not guarantee that it compiles with previous versions of this interface. If user code compatibility with version 5.2.0r is desired then care must be taken to limit the use of this interface to features that were available in the 5.2.0r release.
  Changes made after the 5.2.0r release:

  8.1.0 Added argument `pinflag` to provide access to DE sharing between PETs.

DESCRIPTION:

Create an `ESMF_Field` and allocate space internally for an `ESMF_Array`. Return a new `ESMF_Field`. For an example and associated documentation using this method see section 27.3.5.

The arguments are:

grid `ESMF_Grid` object.

arrayspec Data type and kind specification.

[indexflag] Indicate how DE-local indices are defined. By default each DE's exclusive region is placed to start at the local index space origin, i.e. (1, 1, ..., 1). Alternatively the DE-local index space can be aligned with the global index space, if a global index space is well defined by the associated Grid. See section 55.29 for a list of valid indexflag options. The default indexflag value is the one stored in then `ESMF_Grid` object. Currently it is erroneous to specify an indexflag different from the one stored in the `ESMF_Grid` object.The default value is `ESMF_INDEX_DELOCAL`

[staggerloc] Stagger location of data in grid cells. For valid predefined values see section 32.2.6. To create a custom stagger location see section 32.3.25. The default value is `ESMF_STAGGERLOC_CENTER`.

[gridToFieldMap] List with number of elements equal to the `grid`'s dimCount. The list elements map each dimension of the `grid` to a dimension in the `field` by specifying the appropriate `field` dimension index. The default is to map all of the `grid`'s dimensions against the lowest dimensions of the `field` in sequence, i.e. `gridToFieldMap` = (/1,2,3,.../). The values of all `gridToFieldMap` entries must be greater than or equal to one and smaller than or equal to the `field` rank. It is erroneous to specify the same `gridToFieldMap` entry multiple times. The total ungridded dimensions in the `field` are the total `field` dimensions less the dimensions in the `grid`. Ungridded dimensions must be in the same order they are stored in the field. If the Field dimCount is less than the Grid dimCount then the default gridToFieldMap will contain zeros for the rightmost entries. A zero entry in the `gridToFieldMap` indicates that the particular Grid dimension will be replicating the Field across the DEs along this direction.

[ungriddedLBound] Lower bounds of the ungridded dimensions of the `field`. The number of elements in the `ungriddedLBound` is equal to the number of ungridded dimensions in the `field`. All ungridded dimensions of the `field` are also undistributed. When field dimension count is greater than grid dimension count, both ungriddedLBound and ungriddedUBound must be specified. When both are specified the values are checked for consistency. Note that the the ordering of these ungridded dimensions is the same as their order in the `field`.

[ungriddedUBound] Upper bounds of the ungridded dimensions of the `field`. The number of elements in the `ungriddedUBound` is equal to the number of ungridded dimensions in the `field`. All ungridded dimensions of the `field` are also undistributed. When field dimension count is greater than grid dimension count, both ungriddedLBound and ungriddedUBound must be specified. When both are specified the values are checked for consistency. Note that the the ordering of these ungridded dimensions is the same as their order in the `field`.

[totalLWidth] Lower bound of halo region. The size of this array is the number of gridded dimensions in the Field. However, ordering of the elements needs to be the same as they appear in the `field`. Values default to 0. If values for totalLWidth are specified they must be reflected in the size of the `field`. That is, for each gridded dimension the `field` size should be max(`totalLWidth` + `totalUWidth` + `computationalCount`, `exclusiveCount`).

[totalUWidth] Upper bound of halo region. The size of this array is the number of gridded dimensions in the Field. However, ordering of the elements needs to be the same as they appear in the `field`. Values default to 0. If values for totalUWidth are specified they must be reflected in the size of the `field`. That is, for each gridded dimension the `field` size should be max(`totalLWidth` + `totalUWidth` + `computationalCount`, `exclusiveCount`).

[pinflag] Specify which type of resource DEs are pinned to. See section 51.2.1 for a list of valid pinning options. The default is to pin DEs to PETs, i.e. only the PET on which a DE was created considers the DE as local.

[name] Field name.

[rc] Return code; equals `ESMF_SUCCESS` if there are no errors.

27.6.12 ESMF_FieldCreate - Create a Field from Grid and Array

INTERFACE:

```
! Private name; call using ESMF_FieldCreate()
function ESMF_FieldCreateGridArray(grid, array, datacopyflag, &
  staggerloc, gridToFieldMap, ungriddedLBound, ungriddedUBound, &
  totalLWidth, totalUWidth, name, vm, rc)
```

RETURN VALUE:

```
type(ESMF_Field) :: ESMF_FieldCreateGridArray
```

ARGUMENTS:

```
     type(ESMF_Grid), intent(in) :: grid
     type(ESMF_Array), intent(in) :: array
 -- The following arguments require argument keyword syntax (e.g. rc=rc). --
     type(ESMF_DataCopy_Flag), intent(in), optional :: datacopyflag
     type(ESMF_StaggerLoc), intent(in), optional :: staggerloc
```

```
integer, intent(in), optional :: gridToFieldMap(:)
integer, intent(in), optional :: ungriddedLBound(:)
integer, intent(in), optional :: ungriddedUBound(:)
integer, intent(in), optional :: totalLWidth(:)
integer, intent(in), optional :: totalUWidth(:)
character (len = *), intent(in), optional :: name
type(ESMF_VM), intent(in), optional :: vm
integer, intent(out), optional :: rc
```

STATUS:

- This interface is backward compatible with ESMF versions starting at 5.2.0r. If code using this interface compiles with any version of ESMF starting with 5.2.0r, then it will compile with the current version.
- This interface was modified since ESMF version 5.2.0r. The fact that code using this interface compiles with the current ESMF version does not guarantee that it compiles with previous versions of this interface. If user code compatibility with version 5.2.0r is desired then care must be taken to limit the use of this interface to features that were available in the 5.2.0r release.
  Changes made after the 5.2.0r release:

  8.0.0 Added argument `vm` to support object creation on a different VM than that of the current context.

DESCRIPTION:

Create an `ESMF_Field`. This version of creation assumes the data exists already and is being passed in through an `ESMF_Array`. For an example and associated documentation using this method see section 27.3.6.

The arguments are:

grid `ESMF_Grid` object.

array `ESMF_Array` object.

[datacopyflag] Indicates whether to copy the contents of the `array` or reference it directly. For valid values see 55.13. The default is `ESMF_DATACOPY_REFERENCE`.

[staggerloc] Stagger location of data in grid cells. For valid predefined values see section 32.2.6. To create a custom stagger location see section 32.3.25. The default value is `ESMF_STAGGERLOC_CENTER`.

[gridToFieldMap] List with number of elements equal to the `grid`'s dimCount. The list elements map each dimension of the `grid` to a dimension in the `field` by specifying the appropriate `field` dimension index. The default is to map all of the `grid`'s dimensions against the lowest dimensions of the `field` in sequence, i.e. `gridToFieldMap` = (/1,2,3,.../). The values of all `gridToFieldMap` entries must be greater than or equal to one and smaller than or equal to the `field` rank. It is erroneous to specify the same `gridToFieldMap` entry multiple times. The total ungridded dimensions in the `field` are the total `field` dimensions less the dimensions in the `grid`. Ungridded dimensions must be in the same order they are stored in the field. If the Field dimCount is less than the Grid dimCount then the default gridToFieldMap will contain zeros for the rightmost entries. A zero entry in the `gridToFieldMap` indicates that the particular Grid dimension will be replicating the Field across the DEs along this direction.

[ungriddedLBound] Lower bounds of the ungridded dimensions of the `field`. The number of elements in the `ungriddedLBound` is equal to the number of ungridded dimensions in the `field`. All ungridded dimensions of the `field` are also undistributed. When field dimension count is greater than grid dimension count, both ungriddedLBound and ungriddedUBound must be specified. When both are specified the values are checked for consistency. Note that the the ordering of these ungridded dimensions is the same as their order in the `field`.

[ungriddedUBound] Upper bounds of the ungridded dimensions of the `field`. The number of elements in the `ungriddedUBound` is equal to the number of ungridded dimensions in the `field`. All ungridded dimensions of the `field` are also undistributed. When field dimension count is greater than grid dimension count, both ungriddedLBound and ungriddedUBound must be specified. When both are specified the values are checked for consistency. Note that the the ordering of these ungridded dimensions is the same as their order in the `field`.

[totalLWidth] Lower bound of halo region. The size of this array is the number of gridded dimensions in the Field. However, ordering of the elements needs to be the same as they appear in the `field`. Values default to 0. If values for totalLWidth are specified they must be reflected in the size of the `field`. That is, for each gridded dimension the `field` size should be max(`totalLWidth` + `totalUWidth` + `computationalCount`, `exclusiveCount`).

[totalUWidth] Upper bound of halo region. The size of this array is the number of gridded dimensions in the Field. However, ordering of the elements needs to be the same as they appear in the `field`. Values default to 0. If values for totalUWidth are specified they must be reflected in the size of the `field`. That is, for each gridded dimension the `field` size should max(`totalLWidth` + `totalUWidth` + `computationalCount`, `exclusiveCount`).

[name] Field name.

[vm] If present, the Field object is constructed on the specified `ESMF_VM` object. The default is to construct on the VM of the current component context.

[rc] Return code; equals `ESMF_SUCCESS` if there are no errors.

27.6.13 ESMF_FieldCreate - Create a Field from Grid and Fortran array

INTERFACE:

```
! Private name; call using ESMF_FieldCreate()
function ESMF_FieldCreateGridData<rank><type><kind>(grid, &
farray, indexflag, datacopyflag, staggerloc, &
gridToFieldMap, ungriddedLBound, ungriddedUBound, &
totalLWidth, totalUWidth, name, rc)
```

RETURN VALUE:

```
type(ESMF_Field) :: ESMF_FieldCreateGridData<rank><type><kind>
```

ARGUMENTS:

```
  type(ESMF_Grid), intent(in) :: grid
  <type> (ESMF_KIND_<kind>),intent(in), target :: farray(<rank>)
  type(ESMF_Index_Flag), intent(in) :: indexflag
-- The following arguments require argument keyword syntax (e.g. rc=rc). --
  type(ESMF_DataCopy_Flag), intent(in), optional :: datacopyflag
  type(ESMF_StaggerLoc), intent(in), optional :: staggerloc
  integer, intent(in), optional :: gridToFieldMap(:)
  integer, intent(in), optional :: ungriddedLBound(:)
```

```
integer, intent(in), optional :: ungriddedUBound(:)
integer, intent(in), optional :: totalLWidth(:)
integer, intent(in), optional :: totalUWidth(:)
character (len=*), intent(in), optional :: name
integer, intent(out), optional :: rc
```

STATUS:

- This interface is backward compatible with ESMF versions starting at 5.2.0r. If code using this interface compiles with any version of ESMF starting with 5.2.0r, then it will compile with the current version.

DESCRIPTION:

Create an `ESMF_Field` from a Fortran data array and `ESMF_Grid`. The Fortran data pointer inside `ESMF_Field` can be queried but deallocating the retrieved data pointer is not allowed. For examples and associated documentation regarding this method see section 27.3.11, 27.3.13, 27.3.14, 27.3.15, and 27.3.9.

The arguments are:

grid `ESMF_Grid` object.

farray Native Fortran data array to be copied/referenced in the Field The Field dimension (dimCount) will be the same as the dimCount for the `farray`.

indexflag Indicate how DE-local indices are defined. See section 55.29 for a list of valid indexflag options. Currently it is erroneous to specify an indexflag different from the one stored in the `ESMF_Grid` object.

[datacopyflag] Whether to copy the contents of the `farray` or reference it directly. For valid values see 55.13. The default is `ESMF_DATACOPY_REFERENCE`.

[staggerloc] Stagger location of data in grid cells. For valid predefined values see section 32.2.6. To create a custom stagger location see section 32.3.25. The default value is `ESMF_STAGGERLOC_CENTER`.

[gridToFieldMap] List with number of elements equal to the `grid`'s dimCount. The list elements map each dimension of the `grid` to a dimension in the `farray` by specifying the appropriate `farray` dimension index. The default is to map all of the `grid`'s dimensions against the lowest dimensions of the `farray` in sequence, i.e. `gridToFieldMap` = (/1,2,3,.../). The values of all `gridToFieldMap` entries must be greater than or equal to one and smaller than or equal to the `farray` rank. It is erroneous to specify the same `gridToFieldMap` entry multiple times. The total ungridded dimensions in the `field` are the total `farray` dimensions less the total (distributed + undistributed) dimensions in the `grid`. Ungridded dimensions must be in the same order they are stored in the farray. Permutations of the order of dimensions are handled via individual communication methods. For example, an undistributed dimension can be remapped to a distributed dimension as part of the `ESMF_ArrayRedist()` operation. If the Field dimCount is less than the Grid dimCount then the default gridToFieldMap will contain zeros for the rightmost entries. A zero entry in the `gridToFieldMap` indicates that the particular Grid dimension will be replicating the Field across the DEs along this direction.

[ungriddedLBound] Lower bounds of the ungridded dimensions of the `field`. The number of elements in the `ungriddedLBound` is equal to the number of ungridded dimensions in the `field`. All ungridded dimensions of the `field` are also undistributed. When field dimension count is greater than grid dimension count, both ungriddedLBound and ungriddedUBound must be specified. When both are specified the values are checked for consistency. Note that the the ordering of these ungridded dimensions is the same as their order in the `farray`.

[ungriddedUBound] Upper bounds of the ungridded dimensions of the `field`. The number of elements in the `ungriddedUBound` is equal to the number of ungridded dimensions in the `field`. All ungridded dimensions of the `field` are also undistributed. When field dimension count is greater than grid dimension count, both ungriddedLBound and ungriddedUBound must be specified. When both are specified the values are checked for consistency. Note that the the ordering of these ungridded dimensions is the same as their order in the `farray`.

[totalLWidth] Lower bound of halo region. The size of this array is the number of gridded dimensions in the Field. However, ordering of the elements needs to be the same as they appear in the `farray`. Values default to 0. If values for totalLWidth are specified they must be reflected in the size of the `farray`. That is, for each gridded dimension the `farray` size should be max(`totalLWidth` + `totalUWidth` + `computationalCount`, `exclusiveCount`).

[totalUWidth] Upper bound of halo region. The size of this array is the number of gridded dimensions in the Field. However, ordering of the elements needs to be the same as they appear in the `farray`. Values default to 0. If values for totalUWidth are specified they must be reflected in the size of the `farray`. That is, for each gridded dimension the `farray` size should max(`totalLWidth` + `totalUWidth` + `computationalCount`, `exclusiveCount`).

[name] Field name.

[rc] Return code; equals `ESMF_SUCCESS` if there are no errors.

27.6.14 ESMF_FieldCreate - Create a Field from Grid and Fortran array pointer

INTERFACE:

```
! Private name; call using ESMF_FieldCreate()
function ESMF_FieldCreateGridDataPtr<rank><type><kind>(grid, &
farrayPtr, datacopyflag, staggerloc, gridToFieldMap, &
totalLWidth, totalUWidth, name, rc)
```

RETURN VALUE:

```
type(ESMF_Field) :: ESMF_FieldCreateGridDataPtr<rank><type><kind>
```

ARGUMENTS:

```
  type(ESMF_Grid), intent(in) :: grid
  <type> (ESMF_KIND_<kind>), pointer :: farrayPtr(<rank>)
-- The following arguments require argument keyword syntax (e.g. rc=rc). --
  type(ESMF_DataCopy_Flag), intent(in), optional :: datacopyflag
  type(ESMF_StaggerLoc), intent(in), optional :: staggerloc
  integer, intent(in), optional :: gridToFieldMap(:)
  integer, intent(in), optional :: totalLWidth(:)
  integer, intent(in), optional :: totalUWidth(:)
  character (len=*), intent(in), optional :: name
  integer, intent(out), optional :: rc
```

STATUS:

- This interface is backward compatible with ESMF versions starting at 5.2.0r. If code using this interface compiles with any version of ESMF starting with 5.2.0r, then it will compile with the current version.

DESCRIPTION:

Create an `ESMF_Field` from a Fortran data pointer and `ESMF_Grid`. The Fortran data pointer inside `ESMF_Field` can be queried and deallocated when datacopyflag is `ESMF_DATACOPY_REFERENCE`. Note that the `ESMF_FieldDestroy` call does not deallocate the Fortran data pointer in this case. This gives user more flexibility over memory management.

For examples and associated documentation regarding this method see section 27.3.12, 27.3.13, 27.3.14, 27.3.15, and 27.3.9.

The arguments are:

grid `ESMF_Grid` object.

farrayPtr Native Fortran data pointer to be copied/referenced in the Field The Field dimension (dimCount) will be the same as the dimCount for the `farrayPtr`.

[datacopyflag] Whether to copy the contents of the `farrayPtr` or reference it directly. For valid values see 55.13. The default is `ESMF_DATACOPY_REFERENCE`.

[staggerloc] Stagger location of data in grid cells. For valid predefined values see section 32.2.6. To create a custom stagger location see section 32.3.25. The default value is `ESMF_STAGGERLOC_CENTER`.

[gridToFieldMap] List with number of elements equal to the `grid`'s dimCount. The list elements map each dimension of the `grid` to a dimension in the `farrayPtr` by specifying the appropriate `farrayPtr` dimension index. The default is to map all of the `grid`'s dimensions against the lowest dimensions of the `farrayPtr` in sequence, i.e. `gridToFieldMap` = (/1,2,3,.../). The values of all `gridToFieldMap` entries must be greater than or equal to one and smaller than or equal to the `farrayPtr` rank. It is erroneous to specify the same `gridToFieldMap` entry multiple times. The total ungridded dimensions in the `field` are the total `farrayPtr` dimensions less the total (distributed + undistributed) dimensions in the `grid`. Ungridded dimensions must be in the same order they are stored in the farrayPtr. Permutations of the order of dimensions are handled via individual communication methods. For example, an undistributed dimension can be remapped to a distributed dimension as part of the `ESMF_ArrayRedist()` operation. If the Field dimCount is less than the Grid dimCount then the default gridToFieldMap will contain zeros for the rightmost entries. A zero entry in the `gridToFieldMap` indicates that the particular Grid dimension will be replicating the Field across the DEs along this direction.

[totalLWidth] Lower bound of halo region. The size of this array is the number of gridded dimensions in the Field. However, ordering of the elements needs to be the same as they appear in the `farrayPtr`. Values default to 0. If values for totalLWidth are specified they must be reflected in the size of the `farrayPtr`. That is, for each gridded dimension the `farrayPtr` size should be max(`totalLWidth` + `totalUWidth` + `computationalCount`, `exclusiveCount`).

[totalUWidth] Upper bound of halo region. The size of this array is the number of gridded dimensions in the Field. However, ordering of the elements needs to be the same as they appear in the `farrayPtr`. Values default to 0. If values for totalUWidth are specified they must be reflected in the size of the `farrayPtr`. That is, for each gridded dimension the `farrayPtr` size should max(`totalLWidth` + `totalUWidth` + `computationalCount`, `exclusiveCount`).

[name] Field name.

[rc] Return code; equals `ESMF_SUCCESS` if there are no errors.

27.6.15 ESMF_FieldCreate - Create a Field from LocStream and typekind

INTERFACE:

```
! Private name; call using ESMF_FieldCreate()
function ESMF_FieldCreateLSTKR(locstream, typekind, &
  gridToFieldMap, ungriddedLBound, ungriddedUBound, pinflag, name, rc)
```

RETURN VALUE:

```
type(ESMF_Field) :: ESMF_FieldCreateLSTKR
```

ARGUMENTS:

```
     type(ESMF_LocStream), intent(in) :: locstream
     type(ESMF_TypeKind_Flag),intent(in) :: typekind
 -- The following arguments require argument keyword syntax (e.g. rc=rc). --
     integer, intent(in), optional :: gridToFieldMap(:)
     integer, intent(in), optional :: ungriddedLBound(:)
     integer, intent(in), optional :: ungriddedUBound(:)
     type(ESMF_Pin_Flag), intent(in), optional :: pinflag
     character (len=*), intent(in), optional :: name
     integer, intent(out), optional :: rc
```

DESCRIPTION:

Create an `ESMF_Field` and allocate space internally for an `ESMF_Array`. Return a new `ESMF_Field`. For an example and associated documentation using this method see section 27.3.16.

The arguments are:

locstream `ESMF_LocStream` object.

typekind The typekind of the Field. See section 55.61 for a list of valid typekind options.

[gridToFieldMap] List with number of elements equal to the `grid`'s dimCount. The list elements map each dimension of the `grid` to a dimension in the `field` by specifying the appropriate `field` dimension index. The default is to map all of the `grid`'s dimensions against the lowest dimensions of the `field` in sequence, i.e. `gridToFieldMap` = (/1,2,3,.../). The values of all `gridToFieldMap` entries must be greater than or equal to one and smaller than or equal to the `field` rank. It is erroneous to specify the same `gridToFieldMap` entry multiple times. The total ungridded dimensions in the `field` are the total `field` dimensions less the dimensions in the `grid`. Ungridded dimensions must be in the same order they are stored in the field. If the Field dimCount is less than the LocStream dimCount then the default gridToFieldMap will contain zeros for the rightmost entries. A zero entry in the `gridToFieldMap` indicates that the particular LocStream dimension will be replicating the Field across the DEs along this direction.

[ungriddedLBound] Lower bounds of the ungridded dimensions of the `field`. The number of elements in the `ungriddedLBound` is equal to the number of ungridded dimensions in the `field`. All ungridded dimensions of the `field` are also undistributed. When field dimension count is greater than grid dimension count, both ungriddedLBound and ungriddedUBound must be specified. When both are specified the values are checked for consistency. Note that the the ordering of these ungridded dimensions is the same as their order in the `field`.

[ungriddedUBound] Upper bounds of the ungridded dimensions of the `field`. The number of elements in the `ungriddedUBound` is equal to the number of ungridded dimensions in the `field`. All ungridded dimensions of the `field` are also undistributed. When field dimension count is greater than grid dimension count, both ungriddedLBound and ungriddedUBound must be specified. When both are specified the values are checked for consistency. Note that the the ordering of these ungridded dimensions is the same as their order in the `field`.

[pinflag] Specify which type of resource DEs are pinned to. See section 51.2.1 for a list of valid pinning options. The default is to pin DEs to PETs, i.e. only the PET on which a DE was created considers the DE as local.

[name] Field name.

[rc] Return code; equals `ESMF_SUCCESS` if there are no errors.

27.6.16 ESMF_FieldCreate - Create a Field from LocStream and ArraySpec

INTERFACE:

```
! Private name; call using ESMF_FieldCreate()
function ESMF_FieldCreateLSArraySpec(locstream, arrayspec, &
  gridToFieldMap, ungriddedLBound, ungriddedUBound, pinflag, name, rc)
```

RETURN VALUE:

```
type(ESMF_Field) :: ESMF_FieldCreateLSArraySpec
```

ARGUMENTS:

```
     type(ESMF_LocStream), intent(in) :: locstream
     type(ESMF_ArraySpec), intent(in) :: arrayspec
 -- The following arguments require argument keyword syntax (e.g. rc=rc). --
     integer, intent(in), optional :: gridToFieldMap(:)
     integer, intent(in), optional :: ungriddedLBound(:)
     integer, intent(in), optional :: ungriddedUBound(:)
     type(ESMF_Pin_Flag), intent(in), optional :: pinflag
     character (len=*), intent(in), optional :: name
     integer, intent(out), optional :: rc
```

DESCRIPTION:

Create an `ESMF_Field` and allocate space internally for an `ESMF_Array`. Return a new `ESMF_Field`. For an example and associated documentation using this method see section 27.3.17.

The arguments are:

locstream `ESMF_LocStream` object.

arrayspec Data type and kind specification.

[gridToFieldMap] List with number of elements equal to the `grid`'s dimCount. The list elements map each dimension of the `grid` to a dimension in the `field` by specifying the appropriate `field` dimension index. The default is to map all of the `grid`'s dimensions against the lowest dimensions of the `field` in sequence, i.e. `gridToFieldMap` = (/1,2,3,.../). The values of all `gridToFieldMap` entries must be greater than or equal to one and smaller than or equal to the `field` rank. It is erroneous to specify the same `gridToFieldMap` entry multiple times. The total ungridded dimensions in the `field` are the total `field` dimensions less the dimensions in the `grid`. Ungridded dimensions must be in the same order they are stored in the field. If the Field dimCount is less than the LocStream dimCount then the default gridToFieldMap will contain zeros for the rightmost entries. A zero entry in the `gridToFieldMap` indicates that the particular LocStream dimension will be replicating the Field across the DEs along this direction.

[ungriddedLBound] Lower bounds of the ungridded dimensions of the `field`. The number of elements in the `ungriddedLBound` is equal to the number of ungridded dimensions in the `field`. All ungridded dimensions of the `field` are also undistributed. When field dimension count is greater than grid dimension count, both ungriddedLBound and ungriddedUBound must be specified. When both are specified the values are checked for consistency. Note that the the ordering of these ungridded dimensions is the same as their order in the `field`.

[ungriddedUBound] Upper bounds of the ungridded dimensions of the `field`. The number of elements in the `ungriddedUBound` is equal to the number of ungridded dimensions in the `field`. All ungridded dimensions of the `field` are also undistributed. When field dimension count is greater than grid dimension count, both ungriddedLBound and ungriddedUBound must be specified. When both are specified the values are checked for consistency. Note that the the ordering of these ungridded dimensions is the same as their order in the `field`.

[pinflag] Specify which type of resource DEs are pinned to. See section 51.2.1 for a list of valid pinning options. The default is to pin DEs to PETs, i.e. only the PET on which a DE was created considers the DE as local.

[name] Field name.

[rc] Return code; equals `ESMF_SUCCESS` if there are no errors.

27.6.17 ESMF_FieldCreate - Create a Field from LocStream and Array

INTERFACE:

```
! Private name; call using ESMF_FieldCreate()
function ESMF_FieldCreateLSArray(locstream, array, &
  datacopyflag, gridToFieldMap, ungriddedLBound, ungriddedUBound, &
  name, rc)
```

RETURN VALUE:

```
type(ESMF_Field) :: ESMF_FieldCreateLSArray
```

ARGUMENTS:

```
     type(ESMF_LocStream), intent(in) :: locstream
     type(ESMF_Array), intent(in) :: array
 -- The following arguments require argument keyword syntax (e.g. rc=rc). --
     type(ESMF_DataCopy_Flag), intent(in), optional :: datacopyflag
     integer, intent(in), optional :: gridToFieldMap(:)
     integer, intent(in), optional :: ungriddedLBound(:)
```

```
integer, intent(in), optional :: ungriddedUBound(:)
character (len = *), intent(in), optional :: name
integer, intent(out), optional :: rc
```

DESCRIPTION:

Create an `ESMF_Field`. This version of creation assumes the data exists already and is being passed in through an `ESMF_Array`. For an example and associated documentation using this method see section 27.3.6.

The arguments are:

locstream `ESMF_LocStream` object.

array `ESMF_Array` object.

[datacopyflag] Indicates whether to copy the contents of the `array` or reference it directly. For valid values see 55.13. The default is `ESMF_DATACOPY_REFERENCE`.

[gridToFieldMap] List with number of elements equal to the `grid`'s dimCount. The list elements map each dimension of the `grid` to a dimension in the `field` by specifying the appropriate `field` dimension index. The default is to map all of the `grid`'s dimensions against the lowest dimensions of the `field` in sequence, i.e. `gridToFieldMap` = (/1,2,3,.../). The values of all `gridToFieldMap` entries must be greater than or equal to one and smaller than or equal to the `field` rank. It is erroneous to specify the same `gridToFieldMap` entry multiple times. The total ungridded dimensions in the `field` are the total `field` dimensions less the dimensions in the `grid`. Ungridded dimensions must be in the same order they are stored in the field. If the Field dimCount is less than the LocStream dimCount then the default gridToFieldMap will contain zeros for the rightmost entries. A zero entry in the `gridToFieldMap` indicates that the particular LocStream dimension will be replicating the Field across the DEs along this direction.

[ungriddedLBound] Lower bounds of the ungridded dimensions of the `field`. The number of elements in the `ungriddedLBound` is equal to the number of ungridded dimensions in the `field`. All ungridded dimensions of the `field` are also undistributed. When field dimension count is greater than grid dimension count, both ungriddedLBound and ungriddedUBound must be specified. When both are specified the values are checked for consistency. Note that the the ordering of these ungridded dimensions is the same as their order in the `field`.

[ungriddedUBound] Upper bounds of the ungridded dimensions of the `field`. The number of elements in the `ungriddedUBound` is equal to the number of ungridded dimensions in the `field`. All ungridded dimensions of the `field` are also undistributed. When field dimension count is greater than grid dimension count, both ungriddedLBound and ungriddedUBound must be specified. When both are specified the values are checked for consistency. Note that the the ordering of these ungridded dimensions is the same as their order in the `field`.

[name] Field name.

[rc] Return code; equals `ESMF_SUCCESS` if there are no errors.

27.6.18 ESMF_FieldCreate - Create a Field from LocStream and Fortran array

INTERFACE:

```
! Private name; call using ESMF_FieldCreate()
function ESMF_FieldCreateLSData<rank><type><kind>(locstream, farray, &
indexflag, datacopyflag, gridToFieldMap, ungriddedLBound, &
ungriddedUBound, name, rc)
```

RETURN VALUE:

```
type(ESMF_Field) :: ESMF_FieldCreateLSData<rank><type><kind>
```

ARGUMENTS:

```
  type(ESMF_LocStream), intent(in) :: locstream
  <type> (ESMF_KIND_<kind>),intent(in), target :: farray(<rank>)
  type(ESMF_Index_Flag), intent(in) :: indexflag
 -- The following arguments require argument keyword syntax (e.g. rc=rc). --
  type(ESMF_DataCopy_Flag), intent(in), optional :: datacopyflag
  integer, intent(in), optional :: gridToFieldMap(:)
  integer, intent(in), optional :: ungriddedLBound(:)
  integer, intent(in), optional :: ungriddedUBound(:)
  character (len=*), intent(in), optional :: name
  integer, intent(out), optional :: rc
```

DESCRIPTION:

Create an `ESMF_Field` from a Fortran data array and `ESMF_LocStream`. The Fortran data pointer inside `ESMF_Field` can be queried but deallocating the retrieved data pointer is not allowed.

The arguments are:

locstream `ESMF_LocStream` object.

farray Native Fortran data array to be copied/referenced in the Field The Field dimension (dimCount) will be the same as the dimCount for the `farray`.

indexflag Indicate how DE-local indices are defined. See section 55.29 for a list of valid indexflag options.

[datacopyflag] Whether to copy the contents of the `farray` or reference directly. For valid values see 55.13. The default is `ESMF_DATACOPY_REFERENCE`.

[gridToFieldMap] List with number of elements equal to the `locstream`'s dimCount. The list elements map each dimension of the `locstream` to a dimension in the `farray` by specifying the appropriate `farray` dimension index. The default is to map all of the `locstream`'s dimensions against the lowest dimensions of the `farray` in sequence, i.e. `gridToFieldMap` = (/1,2,3,.../). The values of all `gridToFieldMap` entries must be greater than or equal to one and smaller than or equal to the `farray` rank. It is erroneous to specify the same `gridToFieldMap` entry multiple times. The total ungridded dimensions in the `field` are the total `farray` dimensions less the total (distributed + undistributed) dimensions in the `locstream`. Unlocstreamded dimensions must be in the same order they are stored in the farray. Permutations of the order of dimensions are handled via individual communication methods. For example, an undistributed dimension can be remapped to a distributed dimension as part of the `ESMF_ArrayRedist()` operation. If the Field dimCount is less than the LocStream dimCount then the default gridToFieldMap will contain zeros for the rightmost entries. A zero entry in the `gridToFieldMap` indicates that the particular LocStream dimension will be replicating the Field across the DEs along this direction.

[ungriddedLBound] Lower bounds of the ungridded dimensions of the `field`. The number of elements in the `ungriddedLBound` is equal to the number of ungridded dimensions in the `field`. All ungridded dimensions of the `field` are also undistributed. When field dimension count is greater than locstream dimension count, both ungriddedLBound and ungriddedUBound must be specified. When both are specified the values are checked for consistency. Note that the the ordering of these ungridded dimensions is the same as their order in the `farray`.

[ungriddedUBound] Upper bounds of the ungridded dimensions of the `field`. The number of elements in the `ungriddedUBound` is equal to the number of ungridded dimensions in the `field`. All ungridded dimensions of the `field` are also undistributed. When field dimension count is greater than locstream dimension count, both ungriddedLBound and ungriddedUBound must be specified. When both are specified the values are checked for consistency. Note that the the ordering of these ungridded dimensions is the same as their order in the `farray`.

[name] Field name.

[rc] Return code; equals `ESMF_SUCCESS` if there are no errors.

27.6.19 ESMF_FieldCreate - Create a Field from LocStream and Fortran array pointer

INTERFACE:

```
! Private name; call using ESMF_FieldCreate()
function ESMF_FieldCreateLSDataPtr<rank><type><kind>(locstream, &
farrayPtr, datacopyflag, gridToFieldMap, &
name, rc)
```

RETURN VALUE:

```
type(ESMF_Field) :: ESMF_FieldCreateLSDataPtr<rank><type><kind>
```

ARGUMENTS:

```
  type(ESMF_LocStream), intent(in) :: locstream
  <type> (ESMF_KIND_<kind>),pointer :: farrayPtr(<rank>)
-- The following arguments require argument keyword syntax (e.g. rc=rc). --
  type(ESMF_DataCopy_Flag), intent(in), optional :: datacopyflag
  integer, intent(in), optional :: gridToFieldMap(:)
  character (len=*), intent(in), optional :: name
  integer, intent(out), optional :: rc
```

DESCRIPTION:

Create an `ESMF_Field` from a Fortran data pointer and `ESMF_LocStream`. The Fortran data pointer inside `ESMF_Field` can be queried and deallocated when datacopyflag is `ESMF_DATACOPY_REFERENCE`. Note that the `ESMF_FieldDestroy` call does not deallocate the Fortran data pointer in this case. This gives user more flexibility over memory management.

The arguments are:

locstream `ESMF_LocStream` object.

farrayPtr Native Fortran data pointer to be copied/referenced in the Field The Field dimension (dimCount) will be the same as the dimCount for the `farrayPtr`.

[datacopyflag] Whether to copy the contents of the `farrayPtr` or reference it directly. For valid values see 55.13. The default is `ESMF_DATACOPY_REFERENCE`.

[gridToFieldMap] List with number of elements equal to the `locstream`'s dimCount. The list elements map each dimension of the `locstream` to a dimension in the `farrayPtr` by specifying the appropriate `farrayPtr` dimension index. The default is to map all of the `locstream`'s dimensions against the lowest dimensions of the `farrayPtr` in sequence, i.e. `gridToFieldMap` = (/1,2,3,.../). The values of all `gridToFieldMap` entries must be greater than or equal to one and smaller than or equal to the `farrayPtr` rank. It is erroneous to specify the same `gridToFieldMap` entry multiple times. The total ungridded dimensions in the `field` are the total `farrayPtr` dimensions less the total (distributed + undistributed) dimensions in the `locstream`. Unlocstreamded dimensions must be in the same order they are stored in the farrayPtr. Permutations of the order of dimensions are handled via individual communication methods. For example, an undistributed dimension can be remapped to a distributed dimension as part of the `ESMF_ArrayRedist()` operation. If the Field dimCount is less than the LocStream dimCount then the default gridToFieldMap will contain zeros for the rightmost entries. A zero entry in the `gridToFieldMap` indicates that the particular LocStream dimension will be replicating the Field across the DEs along this direction.

[name] Field name.

[rc] Return code; equals `ESMF_SUCCESS` if there are no errors.

27.6.20 ESMF_FieldCreate - Create a Field from Mesh and typekind

INTERFACE:

```
! Private name; call using ESMF_FieldCreate()
function ESMF_FieldCreateMeshTKR(mesh, typekind, indexflag, &
  meshloc, gridToFieldMap, ungriddedLBound, ungriddedUBound, &
  pinflag, name, rc)
```

RETURN VALUE:

```
type(ESMF_Field) :: ESMF_FieldCreateMeshTKR
```

ARGUMENTS:

```
     type(ESMF_Mesh), intent(in) :: mesh
     type(ESMF_TypeKind_Flag), intent(in) :: typekind
 -- The following arguments require argument keyword syntax (e.g. rc=rc). --
     type(ESMF_Index_Flag), intent(in), optional :: indexflag
     type(ESMF_MeshLoc), intent(in), optional :: meshloc
     integer, intent(in), optional :: gridToFieldMap(:)
     integer, intent(in), optional :: ungriddedLBound(:)
     integer, intent(in), optional :: ungriddedUBound(:)
     type(ESMF_Pin_Flag), intent(in), optional :: pinflag
     character (len=*), intent(in), optional :: name
     integer, intent(out), optional :: rc
```

DESCRIPTION:

Create an `ESMF_Field` and allocate space internally for an `ESMF_Array`. Return a new `ESMF_Field`. For an example and associated documentation using this method see section 27.3.18.

The arguments are:

mesh `ESMF_Mesh` object.

typekind The typekind of the Field. See section 55.61 for a list of valid typekind options.

[indexflag] Indicate how DE-local indices are defined. See section 55.29 for a list of valid indexflag options.

[meshloc] The part of the Mesh on which to build the Field. For valid predefined values see Section 55.41. If not set, defaults to `ESMF_MESHLOC_NODE`.

[gridToFieldMap] List with number of elements equal to the `grid`'s dimCount. The list elements map each dimension of the `grid` to a dimension in the `field` by specifying the appropriate `field` dimension index. The default is to map all of the `grid`'s dimensions against the lowest dimensions of the `field` in sequence, i.e. `gridToFieldMap` = (/1,2,3,.../). The values of all `gridToFieldMap` entries must be greater than or equal to one and smaller than or equal to the `field` rank. It is erroneous to specify the same `gridToFieldMap` entry multiple times. The total ungridded dimensions in the `field` are the total `field` dimensions less the dimensions in the `grid`. Ungridded dimensions must be in the same order they are stored in the field. If the Field dimCount is less than the Mesh dimCount then the default gridToFieldMap will contain zeros for the rightmost entries. A zero entry in the `gridToFieldMap` indicates that the particular Mesh dimension will be replicating the Field across the DEs along this direction.

[ungriddedLBound] Lower bounds of the ungridded dimensions of the `field`. The number of elements in the `ungriddedLBound` is equal to the number of ungridded dimensions in the `field`. All ungridded dimensions of the `field` are also undistributed. When field dimension count is greater than grid dimension count, both ungriddedLBound and ungriddedUBound must be specified. When both are specified the values are checked for consistency. Note that the the ordering of these ungridded dimensions is the same as their order in the `field`.

[ungriddedUBound] Upper bounds of the ungridded dimensions of the `field`. The number of elements in the `ungriddedUBound` is equal to the number of ungridded dimensions in the `field`. All ungridded dimensions of the `field` are also undistributed. When field dimension count is greater than grid dimension count, both ungriddedLBound and ungriddedUBound must be specified. When both are specified the values are checked for consistency. Note that the the ordering of these ungridded dimensions is the same as their order in the `field`.

[pinflag] Specify which type of resource DEs are pinned to. See section 51.2.1 for a list of valid pinning options. The default is to pin DEs to PETs, i.e. only the PET on which a DE was created considers the DE as local.

[name] Field name.

[rc] Return code; equals `ESMF_SUCCESS` if there are no errors.

27.6.21 ESMF_FieldCreate - Create a Field from Mesh and ArraySpec

INTERFACE:

```
! Private name; call using ESMF_FieldCreate()
function ESMF_FieldCreateMeshArraySpec(mesh, arrayspec, &
  indexflag, meshloc, gridToFieldMap, ungriddedLBound, ungriddedUBound, &
  pinflag, name, rc)
```

RETURN VALUE:

```
type(ESMF_Field) :: ESMF_FieldCreateMeshArraySpec
```

ARGUMENTS:

```
     type(ESMF_Mesh), intent(in) :: mesh
     type(ESMF_ArraySpec), intent(in) :: arrayspec
 -- The following arguments require argument keyword syntax (e.g. rc=rc). --
     type(ESMF_Index_Flag),intent(in), optional :: indexflag
     type(ESMF_MeshLoc), intent(in), optional :: meshloc
     integer, intent(in), optional :: gridToFieldMap(:)
     integer, intent(in), optional :: ungriddedLBound(:)
     integer, intent(in), optional :: ungriddedUBound(:)
     type(ESMF_Pin_Flag), intent(in), optional :: pinflag
     character (len=*), intent(in), optional :: name
     integer, intent(out), optional :: rc
```

DESCRIPTION:

Create an `ESMF_Field` and allocate space internally for an `ESMF_Array`. Return a new `ESMF_Field`. For an example and associated documentation using this method see section 27.3.19 and 27.3.21.

The arguments are:

mesh `ESMF_Mesh` object.

arrayspec Data type and kind specification.

[indexflag] Indicate how DE-local indices are defined. See section 55.29 for a list of valid indexflag options.

[meshloc] The part of the Mesh on which to build the Field. For valid predefined values see Section 55.41. If not set, defaults to `ESMF_MESHLOC_NODE`.

[gridToFieldMap] List with number of elements equal to the `grid`'s dimCount. The list elements map each dimension of the `grid` to a dimension in the `field` by specifying the appropriate `field` dimension index. The default is to map all of the `grid`'s dimensions against the lowest dimensions of the `field` in sequence, i.e. `gridToFieldMap` = (/1,2,3,.../). The values of all `gridToFieldMap` entries must be greater than or equal to one and smaller than or equal to the `field` rank. It is erroneous to specify the same `gridToFieldMap` entry multiple times. The total ungridded dimensions in the `field` are the total `field` dimensions less the dimensions in the `grid`. Ungridded dimensions must be in the same order they are stored in the field. If the Field dimCount is less than the Mesh dimCount then the default gridToFieldMap will contain zeros for the rightmost entries. A zero entry in the `gridToFieldMap` indicates that the particular Mesh dimension will be replicating the Field across the DEs along this direction.

[ungriddedLBound] Lower bounds of the ungridded dimensions of the `field`. The number of elements in the `ungriddedLBound` is equal to the number of ungridded dimensions in the `field`. All ungridded dimensions of the `field` are also undistributed. When field dimension count is greater than grid dimension count, both ungriddedLBound and ungriddedUBound must be specified. When both are specified the values are checked for consistency. Note that the the ordering of these ungridded dimensions is the same as their order in the `field`.

[ungriddedUBound] Upper bounds of the ungridded dimensions of the `field`. The number of elements in the `ungriddedUBound` is equal to the number of ungridded dimensions in the `field`. All ungridded dimensions of the `field` are also undistributed. When field dimension count is greater than grid dimension count, both ungriddedLBound and ungriddedUBound must be specified. When both are specified the values are checked for consistency. Note that the the ordering of these ungridded dimensions is the same as their order in the `field`.

[pinflag] Specify which type of resource DEs are pinned to. See section 51.2.1 for a list of valid pinning options. The default is to pin DEs to PETs, i.e. only the PET on which a DE was created considers the DE as local.

[name] Field name.

[rc] Return code; equals `ESMF_SUCCESS` if there are no errors.

27.6.22 ESMF_FieldCreate - Create a Field from Mesh and Array

INTERFACE:

```
! Private name; call using ESMF_FieldCreate()
function ESMF_FieldCreateMeshArray(mesh, array, &
  datacopyflag, meshloc, &
  gridToFieldMap, ungriddedLBound, ungriddedUBound, &
  name, vm, rc)
```

RETURN VALUE:

```
type(ESMF_Field) :: ESMF_FieldCreateMeshArray
```

ARGUMENTS:

```
     type(ESMF_Mesh), intent(in) :: mesh
     type(ESMF_Array), intent(in) :: array
 -- The following arguments require argument keyword syntax (e.g. rc=rc). --
     type(ESMF_DataCopy_Flag), intent(in), optional :: datacopyflag
     type(ESMF_MeshLoc), intent(in), optional :: meshloc
     integer, intent(in), optional :: gridToFieldMap(:)
     integer, intent(in), optional :: ungriddedLBound(:)
     integer, intent(in), optional :: ungriddedUBound(:)
     character (len = *), intent(in), optional :: name
     type(ESMF_VM), intent(in), optional :: vm
     integer, intent(out), optional :: rc
```

DESCRIPTION:

Create an `ESMF_Field`. This version of creation assumes the data exists already and is being passed in through an `ESMF_Array`. For an example and associated documentation using this method see section 27.3.20.

The arguments are:

mesh `ESMF_Mesh` object.

array `ESMF_Array` object.

[datacopyflag] Indicates whether to copy the contents of the `array` or reference it directly. For valid values see 55.13. The default is `ESMF_DATACOPY_REFERENCE`.

[meshloc] The part of the Mesh on which to build the Field. For valid predefined values see Section 55.41. If not set, defaults to `ESMF_MESHLOC_NODE`.

[gridToFieldMap] List with number of elements equal to the `grid`'s dimCount. The list elements map each dimension of the `grid` to a dimension in the `field` by specifying the appropriate `field` dimension index. The default is to map all of the `grid`'s dimensions against the lowest dimensions of the `field` in sequence, i.e. `gridToFieldMap` = (/1,2,3,.../). The values of all `gridToFieldMap` entries must be greater than or equal to one and smaller than or equal to the `field` rank. It is erroneous to specify the same `gridToFieldMap` entry multiple times. The total ungridded dimensions in the `field` are the total `field` dimensions less the dimensions in the `grid`. Ungridded dimensions must be in the same order they are stored in the field. If the Field dimCount is less than the Mesh dimCount then the default gridToFieldMap will contain zeros for the rightmost entries. A zero entry in the `gridToFieldMap` indicates that the particular Mesh dimension will be replicating the Field across the DEs along this direction.

[ungriddedLBound] Lower bounds of the ungridded dimensions of the `field`. The number of elements in the `ungriddedLBound` is equal to the number of ungridded dimensions in the `field`. All ungridded dimensions of the `field` are also undistributed. When field dimension count is greater than grid dimension count, both ungriddedLBound and ungriddedUBound must be specified. When both are specified the values are checked for consistency. Note that the the ordering of these ungridded dimensions is the same as their order in the `field`.

[ungriddedUBound] Upper bounds of the ungridded dimensions of the `field`. The number of elements in the `ungriddedUBound` is equal to the number of ungridded dimensions in the `field`. All ungridded dimensions of the `field` are also undistributed. When field dimension count is greater than grid dimension count, both ungriddedLBound and ungriddedUBound must be specified. When both are specified the values are checked for consistency. Note that the the ordering of these ungridded dimensions is the same as their order in the `field`.

[name] Field name.

[vm] If present, the Field object is constructed on the specified `ESMF_VM` object. The default is to construct on the VM of the current component context.

[rc] Return code; equals `ESMF_SUCCESS` if there are no errors.

27.6.23 ESMF_FieldCreate - Create a Field from Mesh and Fortran array

INTERFACE:

```
! Private name; call using ESMF_FieldCreate()
function ESMF_FieldCreateMeshData<rank><type><kind>(mesh, &
farray, indexflag, datacopyflag, meshloc, &
gridToFieldMap, ungriddedLBound, ungriddedUBound, name, rc)
```

RETURN VALUE:

```
type(ESMF_Field) :: ESMF_FieldCreateMeshData<rank><type><kind>
```

ARGUMENTS:

```
type(ESMF_Mesh), intent(in) :: mesh
<type> (ESMF_KIND_<kind>),intent(in), target :: farray(<rank>)
type(ESMF_Index_Flag), intent(in) :: indexflag
-- The following arguments require argument keyword syntax (e.g. rc=rc). --
```

```
type(ESMF_DataCopy_Flag), intent(in), optional :: datacopyflag
type(ESMF_MeshLoc), intent(in), optional :: meshloc
integer, intent(in), optional :: gridToFieldMap(:)
integer, intent(in), optional :: ungriddedLBound(:)
integer, intent(in), optional :: ungriddedUBound(:)
character (len=*), intent(in), optional :: name
integer, intent(out), optional :: rc
```

DESCRIPTION:

Create an `ESMF_Field` from a Fortran data array and `ESMF_Mesh`. The Fortran data pointer inside `ESMF_Field` can be queried but deallocating the retrieved data pointer is not allowed.

The arguments are:

mesh `ESMF_Mesh` object.

farray Native Fortran data array to be copied/referenced in the Field The Field dimension (dimCount) will be the same as the dimCount for the `farray`.

indexflag Indicate how DE-local indices are defined. See section 55.29 for a list of valid indexflag options.

[datacopyflag] Whether to copy the contents of the `farray` or reference it directly. For valid values see 55.13. The default is `ESMF_DATACOPY_REFERENCE`.

[meshloc] The part of the Mesh on which to build the Field. For valid predefined values see Section 55.41. If not set, defaults to `ESMF_MESHLOC_NODE`.

[gridToFieldMap] List with number of elements equal to the `mesh`'s dimCount. The list elements map each dimension of the `mesh` to a dimension in the `farray` by specifying the appropriate `farray` dimension index. The default is to map all of the `mesh`'s dimensions against the lowest dimensions of the `farray` in sequence, i.e. `gridToFieldMap` = (/1,2,3,.../). The values of all `gridToFieldMap` entries must be greater than or equal to one and smaller than or equal to the `farray` rank. It is erroneous to specify the same `gridToFieldMap` entry multiple times. The total ungridded dimensions in the `field` are the total `farray` dimensions less the total (distributed + undistributed) dimensions in the `mesh`. Unmeshded dimensions must be in the same order they are stored in the farray. Permutations of the order of dimensions are handled via individual communication methods. For example, an undistributed dimension can be remapped to a distributed dimension as part of the `ESMF_ArrayRedist()` operation. If the Field dimCount is less than the Mesh dimCount then the default gridToFieldMap will contain zeros for the rightmost entries. A zero entry in the `gridToFieldMap` indicates that the particular Mesh dimension will be replicating the Field across the DEs along this direction.

[ungriddedLBound] Lower bounds of the ungridded dimensions of the `field`. The number of elements in the `ungriddedLBound` is equal to the number of ungridded dimensions in the `field`. All ungridded dimensions of the `field` are also undistributed. When field dimension count is greater than mesh dimension count, both ungriddedLBound and ungriddedUBound must be specified. When both are specified the values are checked for consistency. Note that the the ordering of these ungridded dimensions is the same as their order in the `farray`.

[ungriddedUBound] Upper bounds of the ungridded dimensions of the `field`. The number of elements in the `ungriddedUBound` is equal to the number of ungridded dimensions in the `field`. All ungridded dimensions of the `field` are also undistributed. When field dimension count is greater than mesh dimension count, both ungriddedLBound and ungriddedUBound must be specified. When both are specified the values are checked for consistency. Note that the the ordering of these ungridded dimensions is the same as their order in the `farray`.

[name] Field name.

[rc] Return code; equals `ESMF_SUCCESS` if there are no errors.

27.6.24 ESMF_FieldCreate - Create a Field from Mesh and Fortran array pointer

INTERFACE:

```
! Private name; call using ESMF_FieldCreate()
function ESMF_FieldCreateMeshDataPtr<rank><type><kind>(mesh, &
farrayPtr, datacopyflag, meshloc, gridToFieldMap, &
name, rc)
```

RETURN VALUE:

```
type(ESMF_Field) :: ESMF_FieldCreateMeshDataPtr<rank><type><kind>
```

ARGUMENTS:

```
  type(ESMF_Mesh), intent(in) :: mesh
  <type> (ESMF_KIND_<kind>),pointer :: farrayPtr(<rank>)
-- The following arguments require argument keyword syntax (e.g. rc=rc). --
  type(ESMF_DataCopy_Flag), intent(in), optional :: datacopyflag
  type(ESMF_MeshLoc), intent(in), optional :: meshloc
  integer, intent(in), optional :: gridToFieldMap(:)
  character (len=*), intent(in), optional :: name
  integer, intent(out), optional :: rc
```

DESCRIPTION:

Create an `ESMF_Field` from a Fortran data pointer and `ESMF_Mesh`. The Fortran data pointer inside `ESMF_Field` can be queried and deallocated when datacopyflag is `ESMF_DATACOPY_REFERENCE`. Note that the `ESMF_FieldDestroy` call does not deallocate the Fortran data pointer in this case. This gives user more flexibility over memory management.

The arguments are:

mesh `ESMF_Mesh` object.

farrayPtr Native Fortran data pointer to be copied/referenced in the Field The Field dimension (dimCount) will be the same as the dimCount for the `farrayPtr`.

[datacopyflag] Whether to copy the contents of the `farrayPtr` or reference it directly. For valid values see 55.13. The default is `ESMF_DATACOPY_REFERENCE`.

[meshloc] The part of the Mesh on which to build the Field. For valid predefined values see Section 55.41. If not set, defaults to `ESMF_MESHLOC_NODE`.

[gridToFieldMap] List with number of elements equal to the `mesh`'s dimCount. The list elements map each dimension of the `mesh` to a dimension in the `farrayPtr` by specifying the appropriate `farrayPtr` dimension index. The default is to map all of the `mesh`'s dimensions against the lowest dimensions of the `farrayPtr` in sequence, i.e. `gridToFieldMap` = (/1,2,3,.../). The values of all `gridToFieldMap` entries must be greater than or equal to one and smaller than or equal to the `farrayPtr` rank. It is erroneous to specify the same `gridToFieldMap` entry multiple times. The total ungridded dimensions in the `field` are the total

farrayPtr dimensions less the total (distributed + undistributed) dimensions in the mesh. Unmeshded dimensions must be in the same order they are stored in the farrayPtr. Permutations of the order of dimensions are handled via individual communication methods. For example, an undistributed dimension can be remapped to a distributed dimension as part of the ESMF_ArrayRedist() operation. If the Field dimCount is less than the Mesh dimCount then the default gridToFieldMap will contain zeros for the rightmost entries. A zero entry in the gridToFieldMap indicates that the particular Mesh dimension will be replicating the Field across the DEs along this direction.

[name] Field name.

[rc] Return code; equals ESMF_SUCCESS if there are no errors.

27.6.25 ESMF_FieldCreate - Create a Field from XGrid and typekind

INTERFACE:

```
! Private name; call using ESMF_FieldCreate()
function ESMF_FieldCreateXGTKR(xgrid, typekind, xgridside, &
  gridindex, gridToFieldMap, ungriddedLBound, ungriddedUBound, &
  pinflag, name, rc)
```

RETURN VALUE:

```
type(ESMF_Field) :: ESMF_FieldCreateXGTKR
```

ARGUMENTS:

```
     type(ESMF_XGrid), intent(in) :: xgrid
     type(ESMF_TypeKind_Flag), intent(in) :: typekind
 -- The following arguments require argument keyword syntax (e.g. rc=rc). --
     type(ESMF_XGridSide_Flag), intent(in), optional :: xgridside
     integer, intent(in), optional :: gridindex
     integer, intent(in), optional :: gridToFieldMap(:)
     integer, intent(in), optional :: ungriddedLBound(:)
     integer, intent(in), optional :: ungriddedUBound(:)
     type(ESMF_Pin_Flag), intent(in), optional :: pinflag
     character (len=*), intent(in), optional :: name
     integer, intent(out), optional :: rc
```

DESCRIPTION:

Create an ESMF_Field and allocate space internally for an ESMF_Array. Return a new ESMF_Field. For an example and associated documentation using this method see section 27.3.16.

The arguments are:

xgrid ESMF_XGrid object.

typekind The typekind of the Field. See section 55.61 for a list of valid typekind options.

[xgridside] Which side of the XGrid to create the Field on (either ESMF_XGRIDSIDE_A, ESMF_XGRIDSIDE_B, or ESMF_XGRIDSIDE_BALANCED). If not passed in then defaults to ESMF_XGRIDSIDE_BALANCED.

[gridindex] If xgridSide is ESMF_XGRIDSIDE_A or ESMF_XGRIDSIDE_B then this index tells which Grid on that side to create the Field on. If not provided, defaults to 1.

[gridToFieldMap] List with number of elements equal to the `grid`'s dimCount. The list elements map each dimension of the `grid` to a dimension in the `field` by specifying the appropriate `field` dimension index. The default is to map all of the `grid`'s dimensions against the lowest dimensions of the `field` in sequence, i.e. `gridToFieldMap` = (/1,2,3,.../). The values of all `gridToFieldMap` entries must be greater than or equal to one and smaller than or equal to the `field` rank. It is erroneous to specify the same `gridToFieldMap` entry multiple times. The total ungridded dimensions in the `field` are the total `field` dimensions less the dimensions in the `grid`. Ungridded dimensions must be in the same order they are stored in the field. If the Field dimCount is less than the XGrid dimCount then the default gridToFieldMap will contain zeros for the rightmost entries. A zero entry in the `gridToFieldMap` indicates that the particular XGrid dimension will be replicating the Field across the DEs along this direction.

[ungriddedLBound] Lower bounds of the ungridded dimensions of the `field`. The number of elements in the `ungriddedLBound` is equal to the number of ungridded dimensions in the `field`. All ungridded dimensions of the `field` are also undistributed. When field dimension count is greater than grid dimension count, both ungriddedLBound and ungriddedUBound must be specified. When both are specified the values are checked for consistency. Note that the the ordering of these ungridded dimensions is the same as their order in the `field`.

[ungriddedUBound] Upper bounds of the ungridded dimensions of the `field`. The number of elements in the `ungriddedUBound` is equal to the number of ungridded dimensions in the `field`. All ungridded dimensions of the `field` are also undistributed. When field dimension count is greater than grid dimension count, both ungriddedLBound and ungriddedUBound must be specified. When both are specified the values are checked for consistency. Note that the the ordering of these ungridded dimensions is the same as their order in the `field`.

[pinflag] Specify which type of resource DEs are pinned to. See section 51.2.1 for a list of valid pinning options. The default is to pin DEs to PETs, i.e. only the PET on which a DE was created considers the DE as local.

[name] Field name.

[rc] Return code; equals `ESMF_SUCCESS` if there are no errors.

27.6.26 ESMF_FieldCreate - Create a Field from XGrid and ArraySpec

INTERFACE:

```
! Private name; call using ESMF_FieldCreate()
function ESMF_FieldCreateXGArraySpec(xgrid, arrayspec, &
  xgridside, gridindex, gridToFieldMap, ungriddedLBound, ungriddedUBound, &
  pinflag, name, rc)
```

RETURN VALUE:

```
type(ESMF_Field) :: ESMF_FieldCreateXGArraySpec
```

ARGUMENTS:

```
    type(ESMF_XGrid), intent(in) :: xgrid
    type(ESMF_ArraySpec), intent(in) :: arrayspec
-- The following arguments require argument keyword syntax (e.g. rc=rc). --
    type(ESMF_XGridSide_Flag), intent(in), optional :: xgridSide
    integer, intent(in), optional :: gridIndex
    integer, intent(in), optional :: gridToFieldMap(:)
    integer, intent(in), optional :: ungriddedLBound(:)
    integer, intent(in), optional :: ungriddedUBound(:)
    type(ESMF_Pin_Flag), intent(in), optional :: pinflag
    character (len=*), intent(in), optional :: name
    integer, intent(out), optional :: rc
```

DESCRIPTION:

Create an `ESMF_Field` and allocate space internally for an `ESMF_Array`. Return a new `ESMF_Field`. For an example and associated documentation using this method see section 27.3.17.

The arguments are:

xgrid `ESMF_XGrid` object.

arrayspec Data type and kind specification.

[xgridside] Which side of the XGrid to create the Field on (either ESMF_XGRIDSIDE_A, ESMF_XGRIDSIDE_B, or ESMF_XGRIDSIDE_BALANCED). If not passed in then defaults to ESMF_XGRIDSIDE_BALANCED.

[gridindex] If xgridside is ESMF_XGRIDSIDE_A or ESMF_XGRIDSIDE_B then this index tells which Grid on that side to create the Field on. If not provided, defaults to 1.

[gridToFieldMap] List with number of elements equal to the `grid`'s dimCount. The list elements map each dimension of the `grid` to a dimension in the `field` by specifying the appropriate `field` dimension index. The default is to map all of the `grid`'s dimensions against the lowest dimensions of the `field` in sequence, i.e. `gridToFieldMap` = (/1,2,3,.../). The values of all `gridToFieldMap` entries must be greater than or equal to one and smaller than or equal to the `field` rank. It is erroneous to specify the same `gridToFieldMap` entry multiple times. The total ungridded dimensions in the `field` are the total `field` dimensions less the dimensions in the `grid`. Ungridded dimensions must be in the same order they are stored in the field. If the Field dimCount is less than the XGrid dimCount then the default gridToFieldMap will contain zeros for the rightmost entries. A zero entry in the `gridToFieldMap` indicates that the particular XGrid dimension will be replicating the Field across the DEs along this direction.

[ungriddedLBound] Lower bounds of the ungridded dimensions of the `field`. The number of elements in the `ungriddedLBound` is equal to the number of ungridded dimensions in the `field`. All ungridded dimensions of the `field` are also undistributed. When field dimension count is greater than grid dimension count, both ungriddedLBound and ungriddedUBound must be specified. When both are specified the values are checked for consistency. Note that the the ordering of these ungridded dimensions is the same as their order in the `field`.

[ungriddedUBound] Upper bounds of the ungridded dimensions of the `field`. The number of elements in the `ungriddedUBound` is equal to the number of ungridded dimensions in the `field`. All ungridded dimensions of the `field` are also undistributed. When field dimension count is greater than grid dimension count, both ungriddedLBound and ungriddedUBound must be specified. When both are specified the values are checked for consistency. Note that the the ordering of these ungridded dimensions is the same as their order in the `field`.

[pinflag] Specify which type of resource DEs are pinned to. See section 51.2.1 for a list of valid pinning options. The default is to pin DEs to PETs, i.e. only the PET on which a DE was created considers the DE as local.

[name] Field name.

[rc] Return code; equals `ESMF_SUCCESS` if there are no errors.

27.6.27 ESMF_FieldCreate - Create a Field from XGrid and Array

INTERFACE:

```
! Private name; call using ESMF_FieldCreate()
function ESMF_FieldCreateXGArray(xgrid, array, &
  datacopyflag, xgridside, gridindex, &
  gridToFieldMap, ungriddedLBound, ungriddedUBound, &
  name, rc)
```

RETURN VALUE:

```
type(ESMF_Field) :: ESMF_FieldCreateXGArray
```

ARGUMENTS:

```
     type(ESMF_XGrid), intent(in) :: xgrid
     type(ESMF_Array), intent(in) :: array
 -- The following arguments require argument keyword syntax (e.g. rc=rc). --
     type(ESMF_DataCopy_Flag), intent(in), optional :: datacopyflag
     type(ESMF_XGridSide_Flag), intent(in), optional :: xgridside
     integer, intent(in), optional :: gridindex
     integer, intent(in), optional :: gridToFieldMap(:)
     integer, intent(in), optional :: ungriddedLBound(:)
     integer, intent(in), optional :: ungriddedUBound(:)
     character (len = *), intent(in), optional :: name
     integer, intent(out), optional :: rc
```

DESCRIPTION:

Create an `ESMF_Field`. This version of creation assumes the data exists already and is being passed in through an `ESMF_Array`. For an example and associated documentation using this method see section 27.3.6.

The arguments are:

xgrid `ESMF_XGrid` object.

array `ESMF_Array` object.

[datacopyflag] Indicates whether to copy the contents of the `array` or reference it directly. For valid values see 55.13. The default is `ESMF_DATACOPY_REFERENCE`.

[xgridside] Which side of the XGrid to create the Field on (either ESMF_XGRIDSIDE_A, ESMF_XGRIDSIDE_B, or ESMF_XGRIDSIDE_BALANCED). If not passed in then defaults to ESMF_XGRIDSIDE_BALANCED.

[gridindex] If xgridSide is ESMF_XGRIDSIDE_A or ESMF_XGRIDSIDE_B then this index tells which Grid on that side to create the Field on. If not provided, defaults to 1.

[gridToFieldMap] List with number of elements equal to the `grid`'s dimCount. The list elements map each dimension of the `grid` to a dimension in the `field` by specifying the appropriate `field` dimension index. The default is to map all of the `grid`'s dimensions against the lowest dimensions of the `field` in sequence, i.e.

`gridToFieldMap` = (/1,2,3,.../). The values of all `gridToFieldMap` entries must be greater than or equal to one and smaller than or equal to the `field` rank. It is erroneous to specify the same `gridToFieldMap` entry multiple times. The total ungridded dimensions in the `field` are the total `field` dimensions less the dimensions in the `grid`. Ungridded dimensions must be in the same order they are stored in the field. If the Field dimCount is less than the XGrid dimCount then the default gridToFieldMap will contain zeros for the rightmost entries. A zero entry in the `gridToFieldMap` indicates that the particular XGrid dimension will be replicating the Field across the DEs along this direction.

[ungriddedLBound] Lower bounds of the ungridded dimensions of the `field`. The number of elements in the `ungriddedLBound` is equal to the number of ungridded dimensions in the `field`. All ungridded dimensions of the `field` are also undistributed. When field dimension count is greater than grid dimension count, both ungriddedLBound and ungriddedUBound must be specified. When both are specified the values are checked for consistency. Note that the the ordering of these ungridded dimensions is the same as their order in the `field`.

[ungriddedUBound] Upper bounds of the ungridded dimensions of the `field`. The number of elements in the `ungriddedUBound` is equal to the number of ungridded dimensions in the `field`. All ungridded dimensions of the `field` are also undistributed. When field dimension count is greater than grid dimension count, both ungriddedLBound and ungriddedUBound must be specified. When both are specified the values are checked for consistency. Note that the the ordering of these ungridded dimensions is the same as their order in the `field`.

[name] Field name.

[rc] Return code; equals `ESMF_SUCCESS` if there are no errors.

27.6.28 ESMF_FieldCreate - Create a Field from XGrid and Fortran array

INTERFACE:

```
! Private name; call using ESMF_FieldCreate()
function ESMF_FieldCreateXGData<rank><type><kind>(xgrid, &
farray, indexflag, datacopyflag, xgridside, gridindex, &
gridToFieldMap, ungriddedLBound, ungriddedUBound, name,&
rc)
```

RETURN VALUE:

```
type(ESMF_Field) :: ESMF_FieldCreateXGData<rank><type><kind>
```

ARGUMENTS:

```
  type(ESMF_XGrid), intent(in) :: xgrid
  <type> (ESMF_KIND_<kind>), intent(in), target :: farray(<rank>)
  type(ESMF_Index_Flag), intent(in) :: indexflag
-- The following arguments require argument keyword syntax (e.g. rc=rc). --
  type(ESMF_DataCopy_Flag), intent(in), optional :: datacopyflag
  type(ESMF_XGridSide_Flag), intent(in), optional :: xgridside
  integer, intent(in), optional :: gridindex
  integer, intent(in), optional :: gridToFieldMap(:)
  integer, intent(in), optional :: ungriddedLBound(:)
```

```
integer, intent(in), optional :: ungriddedUBound(:)
character (len=*), intent(in), optional :: name
integer, intent(out), optional :: rc
```

DESCRIPTION:

Create an `ESMF_Field` from a Fortran data array and `ESMF_Xgrid`. The Fortran data pointer inside `ESMF_Field` can be queried but deallocating the retrieved data pointer is not allowed.

The arguments are:

xgrid `ESMF_XGrid` object.

farray Native Fortran data array to be copied/referenced in the Field The Field dimension (dimCount) will be the same as the dimCount for the `farray`.

indexflag Indicate how DE-local indices are defined. See section 55.29 for a list of valid indexflag options.

[datacopyflag] Whether to copy the contents of the `farray` or reference directly. For valid values see 55.13. The default is `ESMF_DATACOPY_REFERENCE`.

[xgridside] Which side of the XGrid to create the Field on (either ESMF_XGRIDSIDE_A, ESMF_XGRIDSIDE_B, or ESMF_XGRIDSIDE_BALANCED). If not passed in then defaults to ESMF_XGRIDSIDE_BALANCED.

[gridindex] If xgridside is ESMF_XGRIDSIDE_A or ESMF_XGRIDSIDE_B then this index tells which Grid on that side to create the Field on. If not provided, defaults to 1.

[gridToFieldMap] List with number of elements equal to the `xgrid`'s dimCount. The list elements map each dimension of the `xgrid` to a dimension in the `farray` by specifying the appropriate `farray` dimension index. The default is to map all of the `xgrid`'s dimensions against the lowest dimensions of the `farray` in sequence, i.e. `gridToFieldMap` = (/1,2,3,.../). The values of all `gridToFieldMap` entries must be greater than or equal to one and smaller than or equal to the `farray` rank. It is erroneous to specify the same `gridToFieldMap` entry multiple times. The total ungridded dimensions in the `field` are the total `farray` dimensions less the total (distributed + undistributed) dimensions in the `xgrid`. Unxgridded dimensions must be in the same order they are stored in the farray. Permutations of the order of dimensions are handled via individual communication methods. For example, an undistributed dimension can be remapped to a distributed dimension as part of the `ESMF_ArrayRedist()` operation. If the Field dimCount is less than the Xgrid dimCount then the default gridToFieldMap will contain zeros for the rightmost entries. A zero entry in the `gridToFieldMap` indicates that the particular Xgrid dimension will be replicating the Field across the DEs along this direction.

[ungriddedLBound] Lower bounds of the ungridded dimensions of the `field`. The number of elements in the `ungriddedLBound` is equal to the number of ungridded dimensions in the `field`. All ungridded dimensions of the `field` are also undistributed. When field dimension count is greater than xgrid dimension count, both ungriddedLBound and ungriddedUBound must be specified. When both are specified the values are checked for consistency. Note that the the ordering of these ungridded dimensions is the same as their order in the `farray`.

[ungriddedUBound] Upper bounds of the ungridded dimensions of the `field`. The number of elements in the `ungriddedUBound` is equal to the number of ungridded dimensions in the `field`. All ungridded dimensions of the `field` are also undistributed. When field dimension count is greater than xgrid dimension count, both ungriddedLBound and ungriddedUBound must be specified. When both are specified the values are checked for consistency. Note that the the ordering of these ungridded dimensions is the same as their order in the `farray`.

[name] Field name.

[rc] Return code; equals `ESMF_SUCCESS` if there are no errors.

27.6.29 ESMF_FieldCreate - Create a Field from XGrid and Fortran array pointer

INTERFACE:

```
! Private name; call using ESMF_FieldCreate()
function ESMF_FieldCreateXGDataPtr<rank><type><kind>(xgrid, farrayPtr, &
datacopyflag, xgridside, &
gridindex, gridToFieldMap, name, rc)
```

RETURN VALUE:

```
type(ESMF_Field) :: ESMF_FieldCreateXGDataPtr<rank><type><kind>
```

ARGUMENTS:

```
  type(ESMF_XGrid), intent(in) :: xgrid
  <type> (ESMF_KIND_<kind>), pointer :: farrayPtr(<rank>)
-- The following arguments require argument keyword syntax (e.g. rc=rc). --
  type(ESMF_DataCopy_Flag), intent(in), optional :: datacopyflag
  type(ESMF_XGridSide_Flag), intent(in), optional :: xgridside
  integer, intent(in), optional :: gridindex
  integer, intent(in), optional :: gridToFieldMap(:)
  character (len=*), intent(in), optional :: name
  integer, intent(out), optional :: rc
```

DESCRIPTION:

Create an `ESMF_Field` from a Fortran data pointer and `ESMF_Xgrid`. The Fortran data pointer inside `ESMF_Field` can be queried and deallocated when datacopyflag is `ESMF_DATACOPY_REFERENCE`. Note that the `ESMF_FieldDestroy` call does not deallocate the Fortran data pointer in this case. This gives user more flexibility over memory management.

The arguments are:

xgrid `ESMF_XGrid` object.

farrayPtr Native Fortran data pointer to be copied/referenced in the Field The Field dimension (dimCount) will be the same as the dimCount for the `farrayPtr`.

[datacopyflag] Whether to copy the contents of the `farrayPtr` or reference it directly. For valid values see 55.13. The default is `ESMF_DATACOPY_REFERENCE`.

[xgridside] Which side of the XGrid to create the Field on (either ESMF_XGRIDSIDE_A, ESMF_XGRIDSIDE_B, or ESMF_XGRIDSIDE_BALANCED). If not passed in then defaults to ESMF_XGRIDSIDE_BALANCED.

[gridindex] If xgridside is ESMF_XGRIDSIDE_A or ESMF_XGRIDSIDE_B then this index tells which Grid on that side to create the Field on. If not provided, defaults to 1.

[gridToFieldMap] List with number of elements equal to the `xgrid`'s dimCount. The list elements map each dimension of the `xgrid` to a dimension in the `farrayPtr` by specifying the appropriate `farrayPtr` dimension index. The default is to map all of the `xgrid`'s dimensions against the lowest dimensions of the `farrayPtr`

in sequence, i.e. `gridToFieldMap` = (/1,2,3,.../). The values of all `gridToFieldMap` entries must be greater than or equal to one and smaller than or equal to the `farrayPtr` rank. It is erroneous to specify the same `gridToFieldMap` entry multiple times. The total ungridded dimensions in the `field` are the total `farrayPtr` dimensions less the total (distributed + undistributed) dimensions in the `xgrid`. Unxgridded dimensions must be in the same order they are stored in the farrayPtr. Permutations of the order of dimensions are handled via individual communication methods. For example, an undistributed dimension can be remapped to a distributed dimension as part of the `ESMF_ArrayRedist()` operation. If the Field dimCount is less than the Xgrid dimCount then the default gridToFieldMap will contain zeros for the rightmost entries. A zero entry in the `gridToFieldMap` indicates that the particular Xgrid dimension will be replicating the Field across the DEs along this direction.

[name] Field name.

[rc] Return code; equals `ESMF_SUCCESS` if there are no errors.

27.6.30 ESMF_FieldCreate - Create Field object from an existing Field object

INTERFACE:

```
! Private name; call using ESMF_FieldCreate()
function ESMF_FieldCreateFromField(field, datacopyflag, &
  trailingUngridSlice, name, rc)
```

RETURN VALUE:

```
type(ESMF_Field) :: ESMF_FieldCreateFromField
```

ARGUMENTS:

```
        type(ESMF_Field), intent(in) :: field
 -- The following arguments require argument keyword syntax (e.g. rc=rc). --
        type(ESMF_DataCopy_Flag), intent(in), optional :: datacopyflag
        integer, intent(in), optional :: trailingUngridSlice(:)
        character (len=*), intent(in), optional :: name
        integer, intent(out), optional :: rc
```

DESCRIPTION:

Create an `ESMF_Field` object from an existing Field.

The return value is the newly created `ESMF_Field` object. Supports array slicing.

The arguments are:

field `ESMF_Field` object to be used as originator.

[datacopyflag] Specifies whether the created Field object references the memory allocation provided by `field` directly or copies the data from `field` into a new memory allocation. For valid values see 55.13. The default is `ESMF_DATACOPY_VALUE`.

[trailingUngridSlice] If present, the returned Field refers to a slice of `field` created by removing some or all of the trailing (i.e. rightmost) ungridded dimensions from the incoming Field object. The number of trailing dimensions removed is equal to the size n of `trailingUngridSlice`, which must be less than or equal to the total number of trailing ungridded dimensions in `field`. The `trailingUngridSlice` argument is interpreted as an index tuple for the n trailing ungridded dimensions in `field` in order, and the Field slice at that location is returned.

[name] Name of the Field object.

[rc] Return code; equals `ESMF_SUCCESS` if there are no errors.

27.6.31 ESMF_FieldDestroy - Release resources associated with a Field

INTERFACE:

```
subroutine ESMF_FieldDestroy(field, noGarbage, rc)
```

ARGUMENTS:

```
     type(ESMF_Field), intent(inout) :: field
 -- The following arguments require argument keyword syntax (e.g. rc=rc). --
     logical, intent(in), optional :: noGarbage
     integer, intent(out), optional :: rc
```

STATUS:

- This interface is backward compatible with ESMF versions starting at 5.2.0r. If code using this interface compiles with any version of ESMF starting with 5.2.0r, then it will compile with the current version.
- This interface was modified since ESMF version 5.2.0r. The fact that code using this interface compiles with the current ESMF version does not guarantee that it compiles with previous versions of this interface. If user code compatibility with version 5.2.0r is desired then care must be taken to limit the use of this interface to features that were available in the 5.2.0r release.
  Changes made after the 5.2.0r release:

  7.0.0 Added argument `noGarbage`. The argument provides a mechanism to override the default garbage collection mechanism when destroying an ESMF object.

DESCRIPTION:

Destroys the `ESMF_Field`, releasing the resources associated with the object.

If an `ESMF_Grid` is associated with `field`, it will not be released.

By default a small remnant of the object is kept in memory in order to prevent problems with dangling aliases. The default garbage collection mechanism can be overridden with the `noGarbage` argument.

The arguments are:

field `ESMF_Field` object.

[noGarbage] If set to `.TRUE.` the object will be fully destroyed and removed from the ESMF garbage collection system. Note however that under this condition ESMF cannot protect against accessing the destroyed object through dangling aliases – a situation which may lead to hard to debug application crashes.

It is generally recommended to leave the `noGarbage` argument set to `.FALSE.` (the default), and to take advantage of the ESMF garbage collection system which will prevent problems with dangling aliases or incorrect sequences of destroy calls. However this level of support requires that a small remnant of the object is kept in memory past the destroy call. This can lead to an unexpected increase in memory consumption over the course of execution in applications that use temporary ESMF objects. For situations where the repeated creation and destruction of temporary objects leads to memory issues, it is recommended to call with `noGarbage` set to `.TRUE.`, fully removing the entire temporary object from memory.

[rc] Return code; equals `ESMF_SUCCESS` if there are no errors.

27.6.32 ESMF_FieldEmptyComplete - Complete a Field from arrayspec

INTERFACE:

```
   ! Private name; call using ESMF_FieldEmptyComplete()
 subroutine ESMF_FieldEmptyCompAS(field, arrayspec, indexflag, &
  gridToFieldMap, ungriddedLBound, ungriddedUBound, totalLWidth, totalUWidth, &
  pinflag, rc)
```

ARGUMENTS:

```
  type(ESMF_Field), intent(inout) :: field
  type(ESMF_ArraySpec), intent(in) :: arrayspec
 -- The following arguments require argument keyword syntax (e.g. rc=rc). --
  type(ESMF_Index_Flag), intent(in), optional :: indexflag
  integer, intent(in), optional :: gridToFieldMap(:)
  integer, intent(in), optional :: ungriddedLBound(:)
  integer, intent(in), optional :: ungriddedUBound(:)
  integer, intent(in), optional :: totalLWidth(:)
  integer, intent(in), optional :: totalUWidth(:)
  type(ESMF_Pin_Flag), intent(in), optional :: pinflag
  integer, intent(out), optional :: rc
```

STATUS:

- This interface is backward compatible with ESMF versions starting at 5.2.0r. If code using this interface compiles with any version of ESMF starting with 5.2.0r, then it will compile with the current version.
- This interface was modified since ESMF version 5.2.0r. The fact that code using this interface compiles with the current ESMF version does not guarantee that it compiles with previous versions of this interface. If user code compatibility with version 5.2.0r is desired then care must be taken to limit the use of this interface to features that were available in the 5.2.0r release.
  Changes made after the 5.2.0r release:

  8.1.0 Added argument `pinflag` to provide access to DE sharing between PETs.

DESCRIPTION:

Complete an `ESMF_Field` and allocate space internally for an `ESMF_Array` based on arrayspec. The input `ESMF_Field` must have a status of `ESMF_FIELDSTATUS_GRIDSET`. After this call the completed `ESMF_Field` has a status of `ESMF_FIELDSTATUS_COMPLETE`.

The arguments are:

field The input `ESMF_Field` with a status of `ESMF_FIELDSTATUS_GRIDSET`.

arrayspec Data type and kind specification.

[indexflag] Indicate how DE-local indices are defined. By default each DE's exclusive region is placed to start at the local index space origin, i.e. (1, 1, ..., 1). Alternatively the DE-local index space can be aligned with the global index space, if a global index space is well defined by the associated Grid. See section 55.29 for a list of valid indexflag options.

[gridToFieldMap] List with number of elements equal to the `grid`'s dimCount. The list elements map each dimension of the `grid` to a dimension in the `field` by specifying the appropriate `field` dimension index. The default is to map all of the `grid`'s dimensions against the lowest dimensions of the `field` in sequence, i.e. `gridToFieldMap` = (/1,2,3,.../). The values of all `gridToFieldMap` entries must be greater than or equal to one and smaller than or equal to the `field` rank. It is erroneous to specify the same `gridToFieldMap` entry multiple times. The total ungridded dimensions in the `field` are the total `field` dimensions less the dimensions in the `grid`. Ungridded dimensions must be in the same order they are stored in the field. If the Field dimCount is less than the Grid dimCount then the default gridToFieldMap will contain zeros for the rightmost entries. A zero entry in the `gridToFieldMap` indicates that the particular Grid dimension will be replicating the Field across the DEs along this direction.

[ungriddedLBound] Lower bounds of the ungridded dimensions of the `field`. The number of elements in the `ungriddedLBound` is equal to the number of ungridded dimensions in the `field`. All ungridded dimensions of the `field` are also undistributed. When field dimension count is greater than grid dimension count, both ungriddedLBound and ungriddedUBound must be specified. When both are specified the values are checked for consistency. Note that the the ordering of these ungridded dimensions is the same as their order in the `field`.

[ungriddedUBound] Upper bounds of the ungridded dimensions of the `field`. The number of elements in the `ungriddedUBound` is equal to the number of ungridded dimensions in the `field`. All ungridded dimensions of the `field` are also undistributed. When field dimension count is greater than grid dimension count, both ungriddedLBound and ungriddedUBound must be specified. When both are specified the values are checked for consistency. Note that the the ordering of these ungridded dimensions is the same as their order in the `field`.

[totalLWidth] Lower bound of halo region. The size of this array is the number of gridded dimensions in the Field. However, ordering of the elements needs to be the same as they appear in the `field`. Values default to 0. If values for totalLWidth are specified they must be reflected in the size of the `field`. That is, for each gridded dimension the `field` size should be max(`totalLWidth` + `totalUWidth` + `computationalCount`, `exclusiveCount`).

[totalUWidth] Upper bound of halo region. The size of this array is the number of gridded dimensions in the Field. However, ordering of the elements needs to be the same as they appear in the `field`. Values default to 0. If values for totalUWidth are specified they must be reflected in the size of the `field`. That is, for each gridded dimension the `field` size should max(`totalLWidth` + `totalUWidth` + `computationalCount`, `exclusiveCount`).

[pinflag] Specify which type of resource DEs are pinned to. See section 51.2.1 for a list of valid pinning options. The default is to pin DEs to PETs, i.e. only the PET on which a DE was created considers the DE as local.

[rc] Return code; equals `ESMF_SUCCESS` if there are no errors.

27.6.33 ESMF_FieldEmptyComplete - Complete a Field from typekind

INTERFACE:

```
  ! Private name; call using ESMF_FieldEmptyComplete()
subroutine ESMF_FieldEmptyCompTK(field, typekind, indexflag, &
 gridToFieldMap, ungriddedLBound, ungriddedUBound, totalLWidth, totalUWidth, &
 pinflag, rc)
```

ARGUMENTS:

```
 type(ESMF_Field), intent(inout) :: field
 type(ESMF_TypeKind_Flag), intent(in) :: typekind
-- The following arguments require argument keyword syntax (e.g. rc=rc). --
 type(ESMF_Index_Flag), intent(in), optional :: indexflag
 integer, intent(in), optional :: gridToFieldMap(:)
 integer, intent(in), optional :: ungriddedLBound(:)
 integer, intent(in), optional :: ungriddedUBound(:)
 integer, intent(in), optional :: totalLWidth(:)
 integer, intent(in), optional :: totalUWidth(:)
 type(ESMF_Pin_Flag), intent(in), optional :: pinflag
 integer, intent(out), optional :: rc
```

STATUS:

- This interface is backward compatible with ESMF versions starting at 5.2.0r. If code using this interface compiles with any version of ESMF starting with 5.2.0r, then it will compile with the current version.
- This interface was modified since ESMF version 5.2.0r. The fact that code using this interface compiles with the current ESMF version does not guarantee that it compiles with previous versions of this interface. If user code compatibility with version 5.2.0r is desired then care must be taken to limit the use of this interface to features that were available in the 5.2.0r release.
  Changes made after the 5.2.0r release:

  8.1.0 Added argument `pinflag` to provide access to DE sharing between PETs.

DESCRIPTION:

Complete an `ESMF_Field` and allocate space internally for an `ESMF_Array` based on typekind. The input `ESMF_Field` must have a status of `ESMF_FIELDSTATUS_GRIDSET`. After this call the completed `ESMF_Field` has a status of `ESMF_FIELDSTATUS_COMPLETE`.

For an example and associated documentation using this method see section 27.3.7.

The arguments are:

field The input `ESMF_Field` with a status of `ESMF_FIELDSTATUS_GRIDSET`.

typekind Data type and kind specification.

[indexflag] Indicate how DE-local indices are defined. By default each DE's exclusive region is placed to start at the local index space origin, i.e. (1, 1, ..., 1). Alternatively the DE-local index space can be aligned with the global index space, if a global index space is well defined by the associated Grid. See section 55.29 for a list of valid indexflag options.

[gridToFieldMap] List with number of elements equal to the `grid`'s dimCount. The list elements map each dimension of the `grid` to a dimension in the `field` by specifying the appropriate `field` dimension index. The default is to map all of the `grid`'s dimensions against the lowest dimensions of the `field` in sequence, i.e. `gridToFieldMap` = (/1,2,3,.../). The values of all `gridToFieldMap` entries must be greater than or equal to one and smaller than or equal to the `field` rank. It is erroneous to specify the same `gridToFieldMap` entry multiple times. The total ungridded dimensions in the `field` are the total `field` dimensions less the dimensions in the `grid`. Ungridded dimensions must be in the same order they are stored in the field. If the Field dimCount is less than the Grid dimCount then the default gridToFieldMap will contain zeros for the rightmost entries. A zero entry in the `gridToFieldMap` indicates that the particular Grid dimension will be replicating the Field across the DEs along this direction.

[ungriddedLBound] Lower bounds of the ungridded dimensions of the `field`. The number of elements in the `ungriddedLBound` is equal to the number of ungridded dimensions in the `field`. All ungridded dimensions of the `field` are also undistributed. When field dimension count is greater than grid dimension count, both ungriddedLBound and ungriddedUBound must be specified. When both are specified the values are checked for consistency. Note that the the ordering of these ungridded dimensions is the same as their order in the `field`.

[ungriddedUBound] Upper bounds of the ungridded dimensions of the `field`. The number of elements in the `ungriddedUBound` is equal to the number of ungridded dimensions in the `field`. All ungridded dimensions of the `field` are also undistributed. When field dimension count is greater than grid dimension count, both ungriddedLBound and ungriddedUBound must be specified. When both are specified the values are checked for consistency. Note that the the ordering of these ungridded dimensions is the same as their order in the `field`.

[totalLWidth] Lower bound of halo region. The size of this array is the number of gridded dimensions in the Field. However, ordering of the elements needs to be the same as they appear in the `field`. Values default to 0. If values for totalLWidth are specified they must be reflected in the size of the `field`. That is, for each gridded dimension the `field` size should be max(`totalLWidth` + `totalUWidth` + `computationalCount`, `exclusiveCount`).

[totalUWidth] Upper bound of halo region. The size of this array is the number of gridded dimensions in the Field. However, ordering of the elements needs to be the same as they appear in the `field`. Values default to 0. If values for totalUWidth are specified they must be reflected in the size of the `field`. That is, for each gridded dimension the `field` size should max(`totalLWidth` + `totalUWidth` + `computationalCount`, `exclusiveCount`).

[pinflag] Specify which type of resource DEs are pinned to. See section 51.2.1 for a list of valid pinning options. The default is to pin DEs to PETs, i.e. only the PET on which a DE was created considers the DE as local.

[rc] Return code; equals `ESMF_SUCCESS` if there are no errors.

27.6.34 ESMF_FieldEmptyComplete - Complete a Field from Fortran array

INTERFACE:

```
! Private name; call using ESMF_FieldEmptyComplete()
subroutine ESMF_FieldEmptyComp<rank><type><kind>(field, &
farray, indexflag, datacopyflag, gridToFieldMap, &
ungriddedLBound, ungriddedUBound, totalLWidth, totalUWidth, rc)
```

ARGUMENTS:

```
  type(ESMF_Field), intent(inout) :: field
  <type> (ESMF_KIND_<kind>),intent(in), target :: farray(<rank>)
  type(ESMF_Index_Flag), intent(in) :: indexflag
-- The following arguments require argument keyword syntax (e.g. rc=rc). --
  type(ESMF_DataCopy_Flag), intent(in), optional :: datacopyflag
  integer, intent(in), optional :: gridToFieldMap(:)
  integer, intent(in), optional :: ungriddedLBound(:)
  integer, intent(in), optional :: ungriddedUBound(:)
  integer, intent(in), optional :: totalLWidth(:)
  integer, intent(in), optional :: totalUWidth(:)
  integer, intent(out), optional :: rc
```

STATUS:

- This interface is backward compatible with ESMF versions starting at 5.2.0r. If code using this interface compiles with any version of ESMF starting with 5.2.0r, then it will compile with the current version.

DESCRIPTION:

Complete an `ESMF_Field` and allocate space internally for an `ESMF_Array` based on typekind. The input `ESMF_Field` must have a status of `ESMF_FIELDSTATUS_GRIDSET`. After this call the completed `ESMF_Field` has a status of `ESMF_FIELDSTATUS_COMPLETE`.

The Fortran data pointer inside `ESMF_Field` can be queried but deallocating the retrieved data pointer is not allowed.

For an example and associated documentation using this method see section 27.3.8.

The arguments are:

field The input `ESMF_Field` with a status of `ESMF_FIELDSTATUS_GRIDSET`. The `ESMF_Field` will have the same dimension (dimCount) as the rank of the `farray`.

farray Native Fortran data array to be copied/referenced in the `field`. The `field` dimension (dimCount) will be the same as the dimCount for the `farray`.

indexflag Indicate how DE-local indices are defined. See section 55.29 for a list of valid indexflag options.

[datacopyflag] Indicates whether to copy the `farray` or reference it directly. For valid values see 55.13. The default is `ESMF_DATACOPY_REFERENCE`.

[gridToFieldMap] List with number of elements equal to the `grid`'s dimCount. The list elements map each dimension of the `grid` to a dimension in the `farray` by specifying the appropriate `farray` dimension index. The default is to map all of the `grid`'s dimensions against the lowest dimensions of the `farray` in sequence, i.e. `gridToFieldMap` = (/1,2,3,.../). Unmapped `farray` dimensions are undistributed Field dimensions. All `gridToFieldMap` entries must be greater than or equal to zero and smaller than or equal to the Field dimCount. It is erroneous to specify the same entry multiple times unless it is zero. If the Field dimCount is less than the Grid dimCount then the default gridToFieldMap will contain zeros for the rightmost entries. A zero entry in the `gridToFieldMap` indicates that the particular Grid dimension will be replicating the Field across the DEs along this direction.

[ungriddedLBound] Lower bounds of the ungridded dimensions of the `field`. The number of elements in the `ungriddedLBound` is equal to the number of ungridded dimensions in the `field`. All ungridded dimensions of the `field` are also undistributed. When field dimension count is greater than grid dimension count, both ungriddedLBound and ungriddedUBound must be specified. When both are specified the values are checked for consistency. Note that the the ordering of these ungridded dimensions is the same as their order in the `field`.

[ungriddedUBound] Upper bounds of the ungridded dimensions of the `field`. The number of elements in the `ungriddedUBound` is equal to the number of ungridded dimensions in the `field`. All ungridded dimensions of the `field` are also undistributed. When field dimension count is greater than grid dimension count, both ungriddedLBound and ungriddedUBound must be specified. When both are specified the values are checked for consistency. Note that the the ordering of these ungridded dimensions is the same as their order in the `field`.

[totalLWidth] Lower bound of halo region. The size of this array is the number of gridded dimensions in the `field`. However, ordering of the elements needs to be the same as they appear in the `field`. Values default to 0. If values for totalLWidth are specified they must be reflected in the size of the `field`. That is, for each gridded dimension the `field` size should be max(`totalLWidth` + `totalUWidth` + `computationalCount`, `exclusiveCount`).

[totalUWidth] Upper bound of halo region. The size of this array is the number of gridded dimensions in the `field`. However, ordering of the elements needs to be the same as they appear in the `field`. Values default to 0. If values for totalUWidth are specified they must be reflected in the size of the `field`. That is, for each gridded dimension the `field` size should max(`totalLWidth` + `totalUWidth` + `computationalCount`, `exclusiveCount`).

[rc] Return code; equals `ESMF_SUCCESS` if there are no errors.

27.6.35 ESMF_FieldEmptyComplete - Complete a Field from Fortran array pointer

INTERFACE:

```
! Private name; call using ESMF_FieldEmptyComplete()
subroutine ESMF_FieldEmptyCompPtr<rank><type><kind>(field, &
farrayPtr, datacopyflag, gridToFieldMap, &
totalLWidth, totalUWidth, rc)
```

ARGUMENTS:

```
  type(ESMF_Field), intent(inout) :: field
  <type> (ESMF_KIND_<kind>), pointer :: farrayPtr(<rank>)
-- The following arguments require argument keyword syntax (e.g. rc=rc). --
  type(ESMF_DataCopy_Flag), intent(in), optional :: datacopyflag
  integer, intent(in), optional :: gridToFieldMap(:)
  integer, intent(in), optional :: totalLWidth(:)
  integer, intent(in), optional :: totalUWidth(:)
  integer, intent(out), optional :: rc
```

STATUS:

- This interface is backward compatible with ESMF versions starting at 5.2.0r. If code using this interface compiles with any version of ESMF starting with 5.2.0r, then it will compile with the current version.

DESCRIPTION:

Complete an ESMF_Field and allocate space internally for an ESMF_Array based on typekind. The input ESMF_Field must have a status of ESMF_FIELDSTATUS_GRIDSET. After this call the completed ESMF_Field has a status of ESMF_FIELDSTATUS_COMPLETE.

The Fortran data pointer inside ESMF_Field can be queried and deallocated when datacopyflag is ESMF_DATACOPY_REFERENCE. Note that the ESMF_FieldDestroy call does not deallocate the Fortran data pointer in this case. This gives user more flexibility over memory management.

The arguments are:

field The input ESMF_Field with a status of ESMF_FIELDSTATUS_GRIDSET. The ESMF_Field will have the same dimension (dimCount) as the rank of the farrayPtr.

farrayPtr Native Fortran data pointer to be copied/referenced in the field. The field dimension (dimCount) will be the same as the dimCount for the farrayPtr.

[datacopyflag] Indicates whether to copy the farrayPtr or reference it directly. For valid values see 55.13. The default is ESMF_DATACOPY_REFERENCE.

[gridToFieldMap] List with number of elements equal to the grid's dimCount. The list elements map each dimension of the grid to a dimension in the farrayPtr by specifying the appropriate farrayPtr dimension index. The default is to map all of the grid's dimensions against the lowest dimensions of the farrayPtr in sequence, i.e. gridToFieldMap = (/1,2,3,.../). Unmapped farrayPtr dimensions are undistributed Field dimensions. All gridToFieldMap entries must be greater than or equal to zero and smaller than or equal to the Field dimCount. It is erroneous to specify the same entry multiple times unless it is zero. If the Field dimCount is less than the Grid dimCount then the default gridToFieldMap will contain zeros for the rightmost entries. A zero entry in the gridToFieldMap indicates that the particular Grid dimension will be replicating the Field across the DEs along this direction.

[totalLWidth] Lower bound of halo region. The size of this array is the number of gridded dimensions in the field. However, ordering of the elements needs to be the same as they appear in the field. Values default to 0. If values for totalLWidth are specified they must be reflected in the size of the field. That is, for each gridded dimension the field size should be max(totalLWidth + totalUWidth + computationalCount, exclusiveCount).

[totalUWidth] Upper bound of halo region. The size of this array is the number of gridded dimensions in the field. However, ordering of the elements needs to be the same as they appear in the field. Values default to 0. If values for totalUWidth are specified they must be reflected in the size of the field. That is, for each gridded dimension the field size should max(totalLWidth + totalUWidth + computationalCount, exclusiveCount).

[rc] Return code; equals ESMF_SUCCESS if there are no errors.

27.6.36 ESMF_FieldEmptyComplete - Complete a Field from Geom started with FieldEmptyCreate

INTERFACE:

```
! Private name; call using ESMF_FieldEmptyComplete()
subroutine ESMF_FieldEmptyCompGB<rank><type><kind>(field, geom, &
farray, indexflag, datacopyflag, gridToFieldMap, ungriddedLBound, &
ungriddedUBound, totalLWidth, totalUWidth, rc)
```

ARGUMENTS:

```
type(ESMF_Field), intent(inout) :: field
type(ESMF_Geom), intent(in) :: geom
<type> (ESMF_KIND_<kind>), dimension(<rank>), target :: farray
type(ESMF_Index_Flag), intent(in) :: indexflag
type(ESMF_DataCopy_Flag), intent(in), optional :: datacopyflag
integer, intent(in), optional :: gridToFieldMap(:)
integer, intent(in), optional :: ungriddedLBound(:)
integer, intent(in), optional :: ungriddedUBound(:)
integer, intent(in), optional :: totalLWidth(:)
integer, intent(in), optional :: totalUWidth(:)
integer, intent(out), optional :: rc
```

DESCRIPTION:

This call completes an `ESMF_Field` allocated with the `ESMF_FieldEmptyCreate()` call. For an example and associated documentation using this method see section 27.3.7.

The Fortran data pointer inside `ESMF_Field` can be queried but deallocating the retrieved data pointer is not allowed.

The arguments are:

field The `ESMF_Field` object to be completed and committed in this call. The `field` will have the same dimension (dimCount) as the rank of the `farray`.

geom The `ESMF_Geom` object to complete the Field.

farray Native Fortran data array to be copied/referenced in the `field`. The `field` dimension (dimCount) will be the same as the dimCount for the `farray`.

indexflag Indicate how DE-local indices are defined. See section 55.29 for a list of valid indexflag options.

[datacopyflag] Indicates whether to copy the `farray` or reference it directly. For valid values see 55.13. The default is `ESMF_DATACOPY_REFERENCE`.

[gridToFieldMap] List with number of elements equal to the `geom`'s dimCount. The list elements map each dimension of the `geom` to a dimension in the `farray` by specifying the appropriate `farray` dimension index. The default is to map all of the `geom`'s dimensions against the lowest dimensions of the `farray` in sequence, i.e. `gridToFieldMap` = (/1,2,3,.../). Unmapped `farray` dimensions are undistributed Field dimensions. All `gridToFieldMap` entries must be greater than or equal to zero and smaller than or equal to the Field dimCount. It is erroneous to specify the same entry multiple times unless it is zero. If the Field dimCount is less than the Grid dimCount then the default gridToFieldMap will contain zeros for the rightmost entries. A zero entry in the `gridToFieldMap` indicates that the particular Grid dimension will be replicating the Field across the DEs along this direction.

[ungriddedLBound] Lower bounds of the ungridded dimensions of the `field`. The number of elements in the `ungriddedLBound` is equal to the number of ungridded dimensions in the `field`. All ungridded dimensions of the `field` are also undistributed. When field dimension count is greater than grid dimension count, both ungriddedLBound and ungriddedUBound must be specified. When both are specified the values are checked for consistency. Note that the the ordering of these ungridded dimensions is the same as their order in the `field`.

[ungriddedUBound] Upper bounds of the ungridded dimensions of the `field`. The number of elements in the `ungriddedUBound` is equal to the number of ungridded dimensions in the `field`. All ungridded dimensions of the `field` are also undistributed. When field dimension count is greater than grid dimension count, both ungriddedLBound and ungriddedUBound must be specified. When both are specified the values are checked for consistency. Note that the the ordering of these ungridded dimensions is the same as their order in the `field`.

[totalLWidth] Lower bound of halo region. The size of this array is the number of gridded dimensions in the `field`. However, ordering of the elements needs to be the same as they appear in the `field`. Values default to 0. If values for totalLWidth are specified they must be reflected in the size of the `field`. That is, for each gridded dimension the `field` size should be max(`totalLWidth` + `totalUWidth` + `computationalCount`, `exclusiveCount`).

[totalUWidth] Upper bound of halo region. The size of this array is the number of gridded dimensions in the `field`. However, ordering of the elements needs to be the same as they appear in the `field`. Values default to 0. If values for totalUWidth are specified they must be reflected in the size of the `field`. That is, for each gridded dimension the `field` size should be max(`totalLWidth` + `totalUWidth` + `computationalCount`, `exclusiveCount`).

[rc] Return code; equals `ESMF_SUCCESS` if there are no errors.

27.6.37 ESMF_FieldEmptyComplete - Complete a Field from Geom started with FieldEmptyCreate

INTERFACE:

```
! Private name; call using ESMF_FieldEmptyComplete()
subroutine ESMF_FieldEmptyCompGBPtr<rank><type><kind>(field, geom, &
farrayPtr, datacopyflag, gridToFieldMap, &
totalLWidth, totalUWidth, rc)
```

ARGUMENTS:

```
type(ESMF_Field), intent(inou) :: field
type(ESMF_Geom), intent(in) :: geom
<type> (ESMF_KIND_<kind>), dimension(<rank>), pointer :: farrayPtr
type(ESMF_DataCopy_Flag), intent(in), optional :: datacopyflag
integer, intent(in), optional :: gridToFieldMap(:)
integer, intent(in), optional :: totalLWidth(:)
integer, intent(in), optional :: totalUWidth(:)
integer, intent(out), optional :: rc
```

DESCRIPTION:

This call completes an `ESMF_Field` allocated with the `ESMF_FieldEmptyCreate()` call. For an example and associated documentation using this method see section 27.3.7.

The Fortran data pointer inside `ESMF_Field` can be queried and deallocated when datacopyflag is `ESMF_DATACOPY_REFERENCE`. Note that the `ESMF_FieldDestroy` call does not deallocate the Fortran data pointer in this case. This gives user more flexibility over memory management.

The arguments are:

field The `ESMF_Field` object to be completed and committed in this call. The `field` will have the same dimension (dimCount) as the rank of the `farrayPtr`.

geom The `ESMF_Geom` object to complete the Field. The dimCount of the Geom must be smaller than or equal to the rank of the `farrayPtr`.

farrayPtr Native Fortran data pointer to be copied/referenced in the `field`. The `field` dimension (dimCount) will be the same as the dimCount for the `farrayPtr`.

[datacopyflag] Indicates whether to copy the `farrayPtr` or reference it directly. For valid values see 55.13. The default is `ESMF_DATACOPY_REFERENCE`.

[gridToFieldMap] List with number of elements equal to the `geom`'s dimCount. The list elements map each dimension of the `geom` to a dimension in the `farrayPtr` by specifying the appropriate `farrayPtr` dimension index. The default is to map all of the `geom`'s dimensions against the lowest dimensions of the `farrayPtr` in sequence, i.e. `gridToFieldMap` = (/1,2,3,.../). Unmapped `farrayPtr` dimensions are undistributed Field dimensions. All `gridToFieldMap` entries must be greater than or equal to zero and smaller than or equal to the Field dimCount. It is erroneous to specify the same entry multiple times unless it is zero. If the Field dimCount is less than the Grid dimCount then the default gridToFieldMap will contain zeros for the rightmost entries. A zero entry in the `gridToFieldMap` indicates that the particular Grid dimension will be replicating the Field across the DEs along this direction.

[totalLWidth] Lower bound of halo region. The size of this array is the number of gridded dimensions in the `field`. However, ordering of the elements needs to be the same as they appear in the `field`. Values default to 0. If values for totalLWidth are specified they must be reflected in the size of the `field`. That is, for each gridded dimension the `field` size should be max(`totalLWidth` + `totalUWidth` + `computationalCount`, `exclusiveCount`).

[totalUWidth] Upper bound of halo region. The size of this array is the number of gridded dimensions in the `field`. However, ordering of the elements needs to be the same as they appear in the `field`. Values default to 0. If values for totalUWidth are specified they must be reflected in the size of the `field`. That is, for each gridded dimension the `field` size should be max(`totalLWidth` + `totalUWidth` + `computationalCount`, `exclusiveCount`).

[rc] Return code; equals `ESMF_SUCCESS` if there are no errors.

27.6.38 ESMF_FieldEmptyComplete - Complete a Field from Grid started with FieldEmptyCreate

INTERFACE:

```
! Private name; call using ESMF_FieldEmptyComplete()
subroutine ESMF_FieldEmptyCompGrid<rank><type><kind>(field, grid, &
farray, indexflag, datacopyflag, staggerloc, gridToFieldMap, &
ungriddedLBound, ungriddedUBound, totalLWidth, totalUWidth, rc)
```

ARGUMENTS:

```
type(ESMF_Field), intent(inout) :: field
type(ESMF_Grid), intent(in) :: grid
<type> (ESMF_KIND_<kind>),intent(in), target :: farray(<rank>)
type(ESMF_Index_Flag), intent(in) :: indexflag
-- The following arguments require argument keyword syntax (e.g. rc=rc). --
type(ESMF_DataCopy_Flag), intent(in), optional :: datacopyflag
type(ESMF_STAGGERLOC), intent(in), optional :: staggerloc
integer, intent(in), optional :: gridToFieldMap(:)
integer, intent(in), optional :: ungriddedLBound(:)
integer, intent(in), optional :: ungriddedUBound(:)
```

```
integer, intent(in), optional :: totalLWidth(:)
integer, intent(in), optional :: totalUWidth(:)
integer, intent(out), optional :: rc
```

STATUS:

- This interface is backward compatible with ESMF versions starting at 5.2.0r. If code using this interface compiles with any version of ESMF starting with 5.2.0r, then it will compile with the current version.

DESCRIPTION:

This call completes an `ESMF_Field` allocated with the `ESMF_FieldEmptyCreate()` call.

The Fortran data pointer inside `ESMF_Field` can be queried but deallocating the retrieved data pointer is not allowed.

The arguments are:

field The `ESMF_Field` object to be completed and committed in this call. The `field` will have the same dimension (dimCount) as the rank of the `farray`.

grid The `ESMF_Grid` object to complete the Field.

farray Native Fortran data array to be copied/referenced in the `field`. The `field` dimension (dimCount) will be the same as the dimCount for the `farray`.

indexflag Indicate how DE-local indices are defined. See section 55.29 for a list of valid indexflag options.

[datacopyflag] Indicates whether to copy the `farray` or reference it directly. For valid values see 55.13. The default is `ESMF_DATACOPY_REFERENCE`.

[staggerloc] Stagger location of data in grid cells. For valid predefined values see section 32.2.6. To create a custom stagger location see section 32.3.25. The default value is `ESMF_STAGGERLOC_CENTER`.

[gridToFieldMap] List with number of elements equal to the `grid`'s dimCount. The list elements map each dimension of the `grid` to a dimension in the `farray` by specifying the appropriate `farray` dimension index. The default is to map all of the `grid`'s dimensions against the lowest dimensions of the `farray` in sequence, i.e. `gridToFieldMap` = (/1,2,3,.../). Unmapped `farray` dimensions are undistributed Field dimensions. All `gridToFieldMap` entries must be greater than or equal to zero and smaller than or equal to the Field dimCount. It is erroneous to specify the same entry multiple times unless it is zero. If the Field dimCount is less than the Grid dimCount then the default gridToFieldMap will contain zeros for the rightmost entries. A zero entry in the `gridToFieldMap` indicates that the particular Grid dimension will be replicating the Field across the DEs along this direction.

[ungriddedLBound] Lower bounds of the ungridded dimensions of the `field`. The number of elements in the `ungriddedLBound` is equal to the number of ungridded dimensions in the `field`. All ungridded dimensions of the `field` are also undistributed. When field dimension count is greater than grid dimension count, both ungriddedLBound and ungriddedUBound must be specified. When both are specified the values are checked for consistency. Note that the the ordering of these ungridded dimensions is the same as their order in the `field`.

[ungriddedUBound] Upper bounds of the ungridded dimensions of the `field`. The number of elements in the `ungriddedUBound` is equal to the number of ungridded dimensions in the `field`. All ungridded dimensions of the `field` are also undistributed. When field dimension count is greater than grid dimension count, both ungriddedLBound and ungriddedUBound must be specified. When both are specified the values are checked for consistency. Note that the the ordering of these ungridded dimensions is the same as their order in the `field`.

[totalLWidth] Lower bound of halo region. The size of this array is the number of gridded dimensions in the `field`. However, ordering of the elements needs to be the same as they appear in the `field`. Values default to 0. If values for totalLWidth are specified they must be reflected in the size of the `field`. That is, for each gridded dimension the `field` size should be max(`totalLWidth` + `totalUWidth` + `computationalCount`, `exclusiveCount`).

[totalUWidth] Upper bound of halo region. The size of this array is the number of gridded dimensions in the `field`. However, ordering of the elements needs to be the same as they appear in the `field`. Values default to 0. If values for totalUWidth are specified they must be reflected in the size of the `field`. That is, for each gridded dimension the `field` size should max(`totalLWidth` + `totalUWidth` + `computationalCount`, `exclusiveCount`).

[rc] Return code; equals `ESMF_SUCCESS` if there are no errors.

27.6.39 ESMF_FieldEmptyComplete - Complete a Field from Grid started with FieldEmptyCreate

INTERFACE:

```
! Private name; call using ESMF_FieldEmptyComplete()
subroutine ESMF_FieldEmptyCompGridPtr<rank><type><kind>(field, grid, &
farrayPtr, datacopyflag, staggerloc, gridToFieldMap, &
totalLWidth, totalUWidth, rc)
```

ARGUMENTS:

```
  type(ESMF_Field), intent(inout) :: field
  type(ESMF_Grid), intent(in) :: grid
  <type> (ESMF_KIND_<kind>), pointer :: farrayPtr(<rank>)
-- The following arguments require argument keyword syntax (e.g. rc=rc). --
  type(ESMF_DataCopy_Flag), intent(in), optional :: datacopyflag
  type(ESMF_STAGGERLOC), intent(in), optional :: staggerloc
  integer, intent(in), optional :: gridToFieldMap(:)
  integer, intent(in), optional :: totalLWidth(:)
  integer, intent(in), optional :: totalUWidth(:)
  integer, intent(out), optional :: rc
```

STATUS:

- This interface is backward compatible with ESMF versions starting at 5.2.0r. If code using this interface compiles with any version of ESMF starting with 5.2.0r, then it will compile with the current version.

DESCRIPTION:

This call completes an `ESMF_Field` allocated with the `ESMF_FieldEmptyCreate()` call.

The Fortran data pointer inside `ESMF_Field` can be queried and deallocated when datacopyflag is `ESMF_DATACOPY_REFERENCE`. Note that the `ESMF_FieldDestroy` call does not deallocate the Fortran data pointer in this case. This gives user more flexibility over memory management.

The Fortran data pointer inside `ESMF_Field` can be queried and deallocated when

The arguments are:

field The `ESMF_Field` object to be completed and committed in this call. The `field` will have the same dimension (dimCount) as the rank of the `farrayPtr`.

grid The `ESMF_Grid` object to complete the Field.

farrayPtr Native Fortran data pointer to be copied/referenced in the `field`. The `field` dimension (dimCount) will be the same as the dimCount for the `farrayPtr`.

[datacopyflag] Indicates whether to copy the `farrayPtr` or reference it directly. For valid values see 55.13. The default is `ESMF_DATACOPY_REFERENCE`.

[staggerloc] Stagger location of data in grid cells. For valid predefined values see section 32.2.6. To create a custom stagger location see section 32.3.25. The default value is `ESMF_STAGGERLOC_CENTER`.

[gridToFieldMap] List with number of elements equal to the `grid`'s dimCount. The list elements map each dimension of the `grid` to a dimension in the `farrayPtr` by specifying the appropriate `farrayPtr` dimension index. The default is to map all of the `grid`'s dimensions against the lowest dimensions of the `farrayPtr` in sequence, i.e. `gridToFieldMap` = (/1,2,3,.../). Unmapped `farrayPtr` dimensions are undistributed Field dimensions. All `gridToFieldMap` entries must be greater than or equal to zero and smaller than or equal to the Field dimCount. It is erroneous to specify the same entry multiple times unless it is zero. If the Field dimCount is less than the Grid dimCount then the default gridToFieldMap will contain zeros for the rightmost entries. A zero entry in the `gridToFieldMap` indicates that the particular Grid dimension will be replicating the Field across the DEs along this direction.

[totalLWidth] Lower bound of halo region. The size of this array is the number of gridded dimensions in the `field`. However, ordering of the elements needs to be the same as they appear in the `field`. Values default to 0. If values for totalLWidth are specified they must be reflected in the size of the `field`. That is, for each gridded dimension the `field` size should be max(`totalLWidth` + `totalUWidth` + `computationalCount`, `exclusiveCount`).

[totalUWidth] Upper bound of halo region. The size of this array is the number of gridded dimensions in the `field`. However, ordering of the elements needs to be the same as they appear in the `field`. Values default to 0. If values for totalUWidth are specified they must be reflected in the size of the `field`. That is, for each gridded dimension the `field` size should max(`totalLWidth` + `totalUWidth` + `computationalCount`, `exclusiveCount`).

[rc] Return code; equals `ESMF_SUCCESS` if there are no errors.

27.6.40 ESMF_FieldEmptyComplete - Complete a Field from LocStream started with FieldEmptyCreate

INTERFACE:

```
! Private name; call using ESMF_FieldEmptyComplete()
subroutine ESMF_FieldEmptyCompLS<rank><type><kind>(field, locstream, &
farray, indexflag, datacopyflag, gridToFieldMap, &
ungriddedLBound, ungriddedUBound, rc)
```

ARGUMENTS:

```
  type(ESMF_Field), intent(inout) :: field
  type(ESMF_LocStream), intent(in) :: locstream
  <type> (ESMF_KIND_<kind>), intent(in), target :: farray(<rank>)
  type(ESMF_Index_Flag), intent(in) :: indexflag
-- The following arguments require argument keyword syntax (e.g. rc=rc). --
  type(ESMF_DataCopy_Flag), intent(in), optional :: datacopyflag
  integer, intent(in), optional :: gridToFieldMap(:)
  integer, intent(in), optional :: ungriddedLBound(:)
  integer, intent(in), optional :: ungriddedUBound(:)
  integer, intent(out), optional :: rc
```

DESCRIPTION:

This call completes an `ESMF_Field` allocated with the `ESMF_FieldEmptyCreate()` call.

The Fortran data pointer inside `ESMF_Field` can be queried but deallocating the retrieved data pointer is not allowed.

The arguments are:

field The `ESMF_Field` object to be completed and committed in this call. The `field` will have the same dimension (dimCount) as the rank of the `farray`.

locstream The `ESMF_LocStream` object to complete the Field.

farray Native Fortran data array to be copied/referenced in the `field`. The `field` dimension (dimCount) will be the same as the dimCount for the `farray`.

indexflag Indicate how DE-local indices are defined. See section 55.29 for a list of valid indexflag options.

[datacopyflag] Indicates whether to copy the `farray` or reference it directly. For valid values see 55.13. The default is `ESMF_DATACOPY_REFERENCE`.

[gridToFieldMap] List with number of elements equal to the `locstream`'s dimCount. The list elements map each dimension of the `locstream` to a dimension in the `farray` by specifying the appropriate `farray` dimension index. The default is to map all of the `locstream`'s dimensions against the lowest dimensions of the `farray` in sequence, i.e. `gridToFieldMap` = (/1,2,3,.../). Unmapped `farray` dimensions are undistributed Field dimensions. All `gridToFieldMap` entries must be greater than or equal to zero and smaller than or equal to the Field dimCount. It is erroneous to specify the same entry multiple times unless it is zero. If the Field dimCount is less than the LocStream dimCount then the default gridToFieldMap will contain zeros for the rightmost entries. A zero entry in the `gridToFieldMap` indicates that the particular LocStream dimension will be replicating the Field across the DEs along this direction.

[ungriddedLBound] Lower bounds of the ungridded dimensions of the `field`. The number of elements in the `ungriddedLBound` is equal to the number of ungridded dimensions in the `field`. All ungridded dimensions of the `field` are also undistributed. When field dimension count is greater than locstream dimension count, both ungriddedLBound and ungriddedUBound must be specified. When both are specified the values are checked for consistency. Note that the the ordering of these ungridded dimensions is the same as their order in the `field`.

[ungriddedUBound] Upper bounds of the ungridded dimensions of the `field`. The number of elements in the `ungriddedUBound` is equal to the number of ungridded dimensions in the `field`. All ungridded dimensions of the `field` are also undistributed. When field dimension count is greater than locstream dimension count, both ungriddedLBound and ungriddedUBound must be specified. When both are specified the values are checked for consistency. Note that the the ordering of these ungridded dimensions is the same as their order in the `field`.

[rc] Return code; equals `ESMF_SUCCESS` if there are no errors.

27.6.41 ESMF_FieldEmptyComplete - Complete a Field from LocStream started with FieldEmptyCreate

INTERFACE:

```
! Private name; call using ESMF_FieldEmptyComplete()
subroutine ESMF_FieldEmptyCompLSPtr<rank><type><kind>(field, locstream, &
farrayPtr, datacopyflag, gridToFieldMap, rc)
```

ARGUMENTS:

```
  type(ESMF_Field), intent(inout) :: field
  type(ESMF_LocStream), intent(in) :: locstream
  <type> (ESMF_KIND_<kind>), pointer :: farrayPtr(<rank>)
 -- The following arguments require argument keyword syntax (e.g. rc=rc). --
  type(ESMF_DataCopy_Flag), intent(in), optional :: datacopyflag
  integer, intent(in), optional :: gridToFieldMap(:)
  integer, intent(out), optional :: rc
```

DESCRIPTION:

This call completes an `ESMF_Field` allocated with the `ESMF_FieldEmptyCreate()` call.

The Fortran data pointer inside `ESMF_Field` can be queried and deallocated when datacopyflag is `ESMF_DATACOPY_REFERENCE`. Note that the `ESMF_FieldDestroy` call does not deallocate the Fortran data pointer in this case. This gives user more flexibility over memory management.

The arguments are:

field The `ESMF_Field` object to be completed and committed in this call. The `field` will have the same dimension (dimCount) as the rank of the `farrayPtr`.

locstream The `ESMF_LocStream` object to complete the Field.

farrayPtr Native Fortran data pointer to be copied/referenced in the `field`. The `field` dimension (dimCount) will be the same as the dimCount for the `farrayPtr`.

[datacopyflag] Indicates whether to copy the `farrayPtr` or reference it directly. For valid values see 55.13. The default is `ESMF_DATACOPY_REFERENCE`.

[gridToFieldMap] List with number of elements equal to the `locstream`'s dimCount. The list elements map each dimension of the `locstream` to a dimension in the `farrayPtr` by specifying the appropriate `farrayPtr` dimension index. The default is to map all of the `locstream`'s dimensions against the lowest dimensions of the `farrayPtr` in sequence, i.e. `gridToFieldMap` = (/1,2,3,.../). Unmapped `farrayPtr` dimensions are undistributed Field dimensions. All `gridToFieldMap` entries must be greater than or equal to zero and smaller than or equal to the Field dimCount. It is erroneous to specify the same entry multiple times unless it is zero. If the Field dimCount is less than the LocStream dimCount then the default gridToFieldMap will contain zeros for the rightmost entries. A zero entry in the `gridToFieldMap` indicates that the particular LocStream dimension will be replicating the Field across the DEs along this direction.

[rc] Return code; equals `ESMF_SUCCESS` if there are no errors.

27.6.42 ESMF_FieldEmptyComplete - Complete a Field from Mesh started with FieldEmptyCreate

INTERFACE:

```
! Private name; call using ESMF_FieldEmptyComplete()
subroutine ESMF_FieldEmptyCompMesh<rank><type><kind>(field, mesh, &
farray, indexflag, datacopyflag, meshloc, &
gridToFieldMap, ungriddedLBound, ungriddedUBound, rc)
```

ARGUMENTS:

```
type(ESMF_Field), intent(inout) :: field
type(ESMF_Mesh), intent(in) :: mesh
<type> (ESMF_KIND_<kind>), intent(in), target :: farray(<rank>)
type(ESMF_Index_Flag), intent(in) :: indexflag
-- The following arguments require argument keyword syntax (e.g. rc=rc). --
type(ESMF_DataCopy_Flag), intent(in), optional :: datacopyflag
type(ESMF_MeshLoc), intent(in), optional :: meshloc
integer, intent(in), optional :: gridToFieldMap(:)
integer, intent(in), optional :: ungriddedLBound(:)
integer, intent(in), optional :: ungriddedUBound(:)
integer, intent(out), optional :: rc
```

DESCRIPTION:

This call completes an `ESMF_Field` allocated with the `ESMF_FieldEmptyCreate()` call.

The Fortran data pointer inside `ESMF_Field` can be queried but deallocating the retrieved data pointer is not allowed.

The arguments are:

field The `ESMF_Field` object to be completed and committed in this call. The `field` will have the same dimension (dimCount) as the rank of the `farray`.

mesh The `ESMF_Mesh` object to complete the Field.

farray Native Fortran data array to be copied/referenced in the `field`. The `field` dimension (dimCount) will be the same as the dimCount for the `farray`.

indexflag Indicate how DE-local indices are defined. See section 55.29 for a list of valid indexflag options.

[datacopyflag] Indicates whether to copy the `farray` or reference it directly. For valid values see 55.13. The default is `ESMF_DATACOPY_REFERENCE`.

[meshloc] Which part of the mesh to build the Field on. Can be set to either `ESMF_MESHLOC_NODE` or `ESMF_MESHLOC_ELEMENT`. If not set, defaults to `ESMF_MESHLOC_NODE`.

[gridToFieldMap] List with number of elements equal to the `mesh`'s dimCount. The list elements map each dimension of the `mesh` to a dimension in the `farray` by specifying the appropriate `farray` dimension index. The default is to map all of the `mesh`'s dimensions against the lowest dimensions of the `farray` in sequence, i.e. `gridToFieldMap` = (/1,2,3,.../). Unmapped `farray` dimensions are undistributed Field dimensions. All `gridToFieldMap` entries must be greater than or equal to zero and smaller than or equal to the Field dimCount. It is erroneous to specify the same entry multiple times unless it is zero. If the Field dimCount is

less than the Mesh dimCount then the default gridToFieldMap will contain zeros for the rightmost entries. A zero entry in the `gridToFieldMap` indicates that the particular Mesh dimension will be replicating the Field across the DEs along this direction.

[ungriddedLBound] Lower bounds of the ungridded dimensions of the `field`. The number of elements in the `ungriddedLBound` is equal to the number of ungridded dimensions in the `field`. All ungridded dimensions of the `field` are also undistributed. When field dimension count is greater than Mesh dimension count, both ungriddedLBound and ungriddedUBound must be specified. When both are specified the values are checked for consistency. Note that the the ordering of these ungridded dimensions is the same as their order in the `field`.

[ungriddedUBound] Upper bounds of the ungridded dimensions of the `field`. The number of elements in the `ungriddedUBound` is equal to the number of ungridded dimensions in the `field`. All ungridded dimensions of the `field` are also undistributed. When field dimension count is greater than Mesh dimension count, both ungriddedLBound and ungriddedUBound must be specified. When both are specified the values are checked for consistency. Note that the the ordering of these ungridded dimensions is the same as their order in the `field`.

[rc] Return code; equals `ESMF_SUCCESS` if there are no errors.

27.6.43 ESMF_FieldEmptyComplete - Complete a Field from Mesh started with FieldEmptyCreate

INTERFACE:

```
! Private name; call using ESMF_FieldEmptyComplete()
subroutine ESMF_FieldEmptyCompMeshPtr<rank><type><kind>(field, mesh, &
farrayPtr, datacopyflag, meshloc, gridToFieldMap, rc)
```

ARGUMENTS:

```
  type(ESMF_Field), intent(inout) :: field
  type(ESMF_Mesh), intent(in) :: mesh
  <type> (ESMF_KIND_<kind>), pointer :: farrayPtr(<rank>)
-- The following arguments require argument keyword syntax (e.g. rc=rc). --
  type(ESMF_DataCopy_Flag), intent(in), optional :: datacopyflag
  type(ESMF_MeshLoc), intent(in), optional :: meshloc
  integer, intent(in), optional :: gridToFieldMap(:)
  integer, intent(out), optional :: rc
```

DESCRIPTION:

This call completes an `ESMF_Field` allocated with the `ESMF_FieldEmptyCreate()` call.

The Fortran data pointer inside `ESMF_Field` can be queried and deallocated when datacopyflag is `ESMF_DATACOPY_REFERENCE`. Note that the `ESMF_FieldDestroy` call does not deallocate the Fortran data pointer in this case. This gives user more flexibility over memory management.

The arguments are:

field The `ESMF_Field` object to be completed and committed in this call. The `field` will have the same dimension (dimCount) as the rank of the `farrayPtr`.

mesh The `ESMF_Mesh` object to complete the Field.

farrayPtr Native Fortran data pointer to be copied/referenced in the `field`. The `field` dimension (dimCount) will be the same as the dimCount for the `farrayPtr`.

[datacopyflag] Indicates whether to copy the `farrayPtr` or reference it directly. For valid values see 55.13. The default is `ESMF_DATACOPY_REFERENCE`.

[meshloc] Which part of the mesh to build the Field on. Can be set to either `ESMF_MESHLOC_NODE` or `ESMF_MESHLOC_ELEMENT`. If not set, defaults to `ESMF_MESHLOC_NODE`.

[gridToFieldMap] List with number of elements equal to the `mesh`'s dimCount. The list elements map each dimension of the `mesh` to a dimension in the `farrayPtr` by specifying the appropriate `farrayPtr` dimension index. The default is to map all of the `mesh`'s dimensions against the lowest dimensions of the `farrayPtr` in sequence, i.e. `gridToFieldMap` = (/1,2,3,.../). Unmapped `farrayPtr` dimensions are undistributed Field dimensions. All `gridToFieldMap` entries must be greater than or equal to zero and smaller than or equal to the Field dimCount. It is erroneous to specify the same entry multiple times unless it is zero. If the Field dimCount is less than the Mesh dimCount then the default gridToFieldMap will contain zeros for the rightmost entries. A zero entry in the `gridToFieldMap` indicates that the particular Mesh dimension will be replicating the Field across the DEs along this direction.

[rc] Return code; equals `ESMF_SUCCESS` if there are no errors.

27.6.44 ESMF_FieldEmptyComplete - Complete a Field from XGrid started with FieldEmptyCreate

INTERFACE:

```
! Private name; call using ESMF_FieldEmptyComplete()
subroutine ESMF_FieldEmptyCompXG<rank><type><kind>(field, xgrid, &
farray, indexflag, datacopyflag, xgridside, gridindex, &
gridToFieldMap, &
ungriddedLBound, ungriddedUBound, rc)
```

ARGUMENTS:

```
  type(ESMF_Field), intent(inout) :: field
  type(ESMF_XGrid), intent(in) :: xgrid
  <type> (ESMF_KIND_<kind>), intent(in), target :: farray(<rank>)
  type(ESMF_Index_Flag), intent(in) :: indexflag
-- The following arguments require argument keyword syntax (e.g. rc=rc). --
  type(ESMF_DataCopy_Flag), intent(in), optional :: datacopyflag
  type(ESMF_XGridSide_Flag), intent(in), optional :: xgridside
  integer, intent(in), optional :: gridindex
  integer, intent(in), optional :: gridToFieldMap(:)
  integer, intent(in), optional :: ungriddedLBound(:)
  integer, intent(in), optional :: ungriddedUBound(:)
  integer, intent(out), optional :: rc
```

DESCRIPTION:

This call completes an `ESMF_Field` allocated with the `ESMF_FieldEmptyCreate()` call.

The Fortran data pointer inside `ESMF_Field` can be queried but deallocating the retrieved data pointer is not allowed.

The arguments are:

field The `ESMF_Field` object to be completed and committed in this call. The `field` will have the same dimension (dimCount) as the rank of the `farray`.

xgrid The `ESMF_XGrid` object to complete the Field.

farray Native Fortran data array to be copied/referenced in the `field`. The `field` dimension (dimCount) will be the same as the dimCount for the `farray`.

indexflag Indicate how DE-local indices are defined. See section 55.29 for a list of valid indexflag options.

[datacopyflag] Indicates whether to copy the `farray` or reference it directly. For valid values see 55.13. The default is `ESMF_DATACOPY_REFERENCE`.

[xgridside] Which side of the XGrid to create the Field on (either ESMF_XGRIDSIDE_A, ESMF_XGRIDSIDE_B, or ESMF_XGRIDSIDE_BALANCED). If not passed in then defaults to ESMF_XGRIDSIDE_BALANCED.

[gridindex] If xgridSide is ESMF_XGRIDSIDE_A or ESMF_XGRIDSIDE_B then this index tells which Grid on that side to create the Field on. If not provided, defaults to 1.

[gridToFieldMap] List with number of elements equal to the `xgrid`'s dimCount. The list elements map each dimension of the `xgrid` to a dimension in the `farray` by specifying the appropriate `farray` dimension index. The default is to map all of the `xgrid`'s dimensions against the lowest dimensions of the `farray` in sequence, i.e. `gridToFieldMap` = (/1,2,3,.../). Unmapped `farray` dimensions are undistributed Field dimensions. All `gridToFieldMap` entries must be greater than or equal to zero and smaller than or equal to the Field dimCount. It is erroneous to specify the same entry multiple times unless it is zero. If the Field dimCount is less than the XGrid dimCount then the default gridToFieldMap will contain zeros for the rightmost entries. A zero entry in the `gridToFieldMap` indicates that the particular XGrid dimension will be replicating the Field across the DEs along this direction.

[ungriddedLBound] Lower bounds of the ungridded dimensions of the `field`. The number of elements in the `ungriddedLBound` is equal to the number of ungridded dimensions in the `field`. All ungridded dimensions of the `field` are also undistributed. When field dimension count is greater than XGrid dimension count, both ungriddedLBound and ungriddedUBound must be specified. When both are specified the values are checked for consistency. Note that the the ordering of these ungridded dimensions is the same as their order in the `field`.

[ungriddedUBound] Upper bounds of the ungridded dimensions of the `field`. The number of elements in the `ungriddedUBound` is equal to the number of ungridded dimensions in the `field`. All ungridded dimensions of the `field` are also undistributed. When field dimension count is greater than XGrid dimension count, both ungriddedLBound and ungriddedUBound must be specified. When both are specified the values are checked for consistency. Note that the the ordering of these ungridded dimensions is the same as their order in the `field`.

[rc] Return code; equals `ESMF_SUCCESS` if there are no errors.

27.6.45 ESMF_FieldEmptyComplete - Complete a Field from XGrid started with FieldEmptyCreate

INTERFACE:

```
! Private name; call using ESMF_FieldEmptyComplete()
subroutine ESMF_FieldEmptyCompXGPtr<rank><type><kind>(field, xgrid, &
farrayPtr, xgridside, gridindex, &
datacopyflag, gridToFieldMap, rc)
```

ARGUMENTS:

```
  type(ESMF_Field), intent(inout) :: field
  type(ESMF_XGrid), intent(in) :: xgrid
  <type> (ESMF_KIND_<kind>), pointer :: farrayPtr(<rank>)
-- The following arguments require argument keyword syntax (e.g. rc=rc). --
  type(ESMF_DataCopy_Flag), intent(in), optional :: datacopyflag
  type(ESMF_XGridSide_Flag), intent(in), optional :: xgridside
  integer, intent(in), optional :: gridindex
  integer, intent(in), optional :: gridToFieldMap(:)
  integer, intent(out), optional :: rc
```

DESCRIPTION:

This call completes an `ESMF_Field` allocated with the `ESMF_FieldEmptyCreate()` call.

The Fortran data pointer inside `ESMF_Field` can be queried and deallocated when datacopyflag is `ESMF_DATACOPY_REFERENCE`. Note that the `ESMF_FieldDestroy` call does not deallocate the Fortran data pointer in this case. This gives user more flexibility over memory management.

The arguments are:

field The `ESMF_Field` object to be completed and committed in this call. The `field` will have the same dimension (dimCount) as the rank of the `farrayPtr`.

xgrid The `ESMF_XGrid` object to complete the Field.

farrayPtr Native Fortran data pointer to be copied/referenced in the `field`. The `field` dimension (dimCount) will be the same as the dimCount for the `farrayPtr`.

[datacopyflag] Indicates whether to copy the `farrayPtr` or reference it directly. For valid values see 55.13. The default is `ESMF_DATACOPY_REFERENCE`.

[xgridside] Which side of the XGrid to create the Field on (either ESMF_XGRIDSIDE_A, ESMF_XGRIDSIDE_B, or ESMF_XGRIDSIDE_BALANCED). If not passed in then defaults to ESMF_XGRIDSIDE_BALANCED.

[gridindex] If xgridside is ESMF_XGRIDSIDE_A or ESMF_XGRIDSIDE_B then this index tells which Grid on that side to create the Field on. If not provided, defaults to 1.

[gridToFieldMap] List with number of elements equal to the `xgrid`'s dimCount. The list elements map each dimension of the `xgrid` to a dimension in the `farrayPtr` by specifying the appropriate `farrayPtr` dimension index. The default is to map all of the `xgrid`'s dimensions against the lowest dimensions of the `farrayPtr` in sequence, i.e. `gridToFieldMap` = (/1,2,3,.../). Unmapped `farrayPtr` dimensions are undistributed Field dimensions. All `gridToFieldMap` entries must be greater than or equal to zero and smaller than or equal to the Field dimCount. It is erroneous to specify the same entry multiple times unless it is zero. If the Field dimCount is less than the XGrid dimCount then the default gridToFieldMap will contain zeros for the rightmost entries. A zero entry in the `gridToFieldMap` indicates that the particular XGrid dimension will be replicating the Field across the DEs along this direction.

[rc] Return code; equals `ESMF_SUCCESS` if there are no errors.

27.6.46 ESMF_FieldEmptyCreate - Create an empty Field

INTERFACE:

```
function ESMF_FieldEmptyCreate(name, vm, rc)
```

RETURN VALUE:

```
type(ESMF_Field) :: ESMF_FieldEmptyCreate
```

ARGUMENTS:

```
-- The following arguments require argument keyword syntax (e.g. rc=rc). --
    character (len = *), intent(in), optional :: name
    type(ESMF_VM), intent(in), optional :: vm
    integer, intent(out), optional :: rc
```

STATUS:

- This interface is backward compatible with ESMF versions starting at 5.2.0r. If code using this interface compiles with any version of ESMF starting with 5.2.0r, then it will compile with the current version.
- This interface was modified since ESMF version 5.2.0r. The fact that code using this interface compiles with the current ESMF version does not guarantee that it compiles with previous versions of this interface. If user code compatibility with version 5.2.0r is desired then care must be taken to limit the use of this interface to features that were available in the 5.2.0r release.
  Changes made after the 5.2.0r release:

  8.0.0 Added argument `vm` to support object creation on a different VM than that of the current context.

DESCRIPTION:

This version of `ESMF_FieldCreate` builds an empty `ESMF_Field` and depends on later calls to add an `ESMF_Grid` and `ESMF_Array` to it. The empty `ESMF_Field` can be completed in one more step or two more steps by the `ESMF_FieldEmptySet` and `ESMF_FieldEmptyComplete` methods. Attributes can be added to an empty Field object. For an example and associated documentation using this method see section 27.3.8 and 27.3.7.

The arguments are:

[name] Field name.

[vm] If present, the Field object is created on the specified `ESMF_VM` object. The default is to create on the VM of the current component context.

[rc] Return code; equals `ESMF_SUCCESS` if there are no errors.

27.6.47 ESMF_FieldEmptyReset - Reset a Field back to an earlier status

INTERFACE:

```
subroutine ESMF_FieldEmptyReset(field, status, vm, rc)
```

ARGUMENTS:

```
  type(ESMF_Field), intent(inout) :: field
-- The following arguments require argument keyword syntax (e.g. rc=rc). --
  type(ESMF_FieldStatus_Flag), intent(in), optional :: status
  type(ESMF_VM), intent(in), optional :: vm
  integer, intent(out), optional :: rc
```

DESCRIPTION:

Reset an `ESMF_Field` to a less complete status. After this operation, methods appropriate to the new status can be used on the Field. For example, if reset to status `ESMF_FIELDSTATUS_EMPTY`, then `ESMF_FieldEmptySet()` could be used to set a new Grid in the Field.

Note that if used improperly, this method can cause inconsistencies. For example, creating a routeHandle on a Field and then using this method to change the geometry (e.g. Grid) under the Field could lead to the routeHandle no longer being valid for the Field.

The arguments are:

field The `ESMF_Field` object to reset.

[status] The new status to set the Field to. See section 27.2.1 for a complete list of values. The default is `ESMF_FIELDSTATUS_EMPTY`.

[vm] If present, the Field object will only be accessed, and the Grid object set, on those PETs contained in the specified `ESMF_VM` object. The default is to assume the VM of the current context.

[rc] Return code; equals `ESMF_SUCCESS` if there are no errors.

27.6.48 ESMF_FieldEmptySet - Set a Geom in an empty Field

INTERFACE:

```
! Private name; call using ESMF_FieldEmptySet()
subroutine ESMF_FieldEmptySetGeom(field, geom, vm, rc)
```

ARGUMENTS:

```
  type(ESMF_Field), intent(inout) :: field
  type(ESMF_Geom), intent(in) :: geom
-- The following arguments require argument keyword syntax (e.g. rc=rc). --
  type(ESMF_VM), intent(in), optional :: vm
  integer, intent(out), optional :: rc
```

DESCRIPTION:

Set a geom in a non-completed ESMF_Field. The ESMF_Field must not be completed for this to succeed. After this operation, the ESMF_Field contains the ESMF_Geom internally but holds no data. The status of the field changes from ESMF_FIELDSTATUS_EMPTY to ESMF_FIELDSTATUS_GRIDSET or stays ESMF_FIELDSTATUS_GRIDSET.

For an example and associated documentation using this method see section 27.3.7.

The arguments are:

field Empty ESMF_Field. After this operation, the ESMF_Field contains the ESMF_Grid internally but holds no data. The status of the field changes from ESMF_FIELDSTATUS_EMPTY to ESMF_FIELDSTATUS_GRIDSET.

geom ESMF_Geom to be set in the ESMF_Field.

[vm] If present, the Field object will only be accessed, and the Grid object set, on those PETs contained in the specified ESMF_VM object. The default is to assume the VM of the current context.

[rc] Return code; equals ESMF_SUCCESS if there are no errors.

27.6.49 ESMF_FieldEmptySet - Set a Grid in an empty Field

INTERFACE:

```
! Private name; call using ESMF_FieldEmptySet()
subroutine ESMF_FieldEmptySetGrid(field, grid, StaggerLoc, &
  vm, rc)
```

ARGUMENTS:

```
  type(ESMF_Field), intent(inout) :: field
  type(ESMF_Grid), intent(in) :: grid
-- The following arguments require argument keyword syntax (e.g. rc=rc). --
  type(ESMF_STAGGERLOC), intent(in), optional :: StaggerLoc
  type(ESMF_VM), intent(in), optional :: vm
  integer, intent(out), optional :: rc
```

STATUS:

- This interface is backward compatible with ESMF versions starting at 5.2.0r. If code using this interface compiles with any version of ESMF starting with 5.2.0r, then it will compile with the current version.
- This interface was modified since ESMF version 5.2.0r. The fact that code using this interface compiles with the current ESMF version does not guarantee that it compiles with previous versions of this interface. If user code compatibility with version 5.2.0r is desired then care must be taken to limit the use of this interface to features that were available in the 5.2.0r release.
  Changes made after the 5.2.0r release:

  7.1.0r Added argument vm to support object creation on a different VM than that of the current context.

DESCRIPTION:

Set a grid and an optional staggerloc (default to center stagger ESMF_STAGGERLOC_CENTER) in a non-completed ESMF_Field. The ESMF_Field must not be completed for this to succeed. After this operation, the ESMF_Field contains the ESMF_Grid internally but holds no data. The status of the field changes from ESMF_FIELDSTATUS_EMPTY to ESMF_FIELDSTATUS_GRIDSET or stays ESMF_FIELDSTATUS_GRIDSET.

For an example and associated documentation using this method see section 27.3.7.

The arguments are:

field Empty ESMF_Field. After this operation, the ESMF_Field contains the ESMF_Grid internally but holds no data. The status of the field changes from ESMF_FIELDSTATUS_EMPTY to ESMF_FIELDSTATUS_GRIDSET.

grid ESMF_Grid to be set in the ESMF_Field.

[StaggerLoc] Stagger location of data in grid cells. For valid predefined values see section 32.2.6. To create a custom stagger location see section 32.3.25. The default value is ESMF_STAGGERLOC_CENTER.

[vm] If present, the Field object will only be accessed, and the Grid object set, on those PETs contained in the specified ESMF_VM object. The default is to assume the VM of the current context.

[rc] Return code; equals ESMF_SUCCESS if there are no errors.

27.6.50 ESMF_FieldEmptySet - Set a Mesh in an empty Field

INTERFACE:

```
! Private name; call using ESMF_FieldEmptySet()
subroutine ESMF_FieldEmptySetMesh(field, mesh, indexflag, meshloc, rc)
```

ARGUMENTS:

```
  type(ESMF_Field), intent(inout) :: field
  type(ESMF_Mesh), intent(in) :: mesh
-- The following arguments require argument keyword syntax (e.g. rc=rc). --
  type(ESMF_Index_Flag),intent(in), optional :: indexflag
  type(ESMF_MeshLoc), intent(in), optional :: meshloc
  integer, intent(out), optional :: rc
```

DESCRIPTION:

Set a mesh and an optional meshloc (default to center stagger ESMF_MESHLOC_NODE) in a non-completed ESMF_Field. The ESMF_Field must not be completed for this to succeed. After this operation, the ESMF_Field contains the ESMF_Mesh internally but holds no data. The status of the field changes from ESMF_FIELDSTATUS_EMPTY to ESMF_FIELDSTATUS_GRIDSET or stays ESMF_FIELDSTATUS_GRIDSET.

The arguments are:

field Empty ESMF_Field. After this operation, the ESMF_Field contains the ESMF_Mesh internally but holds no data. The status of the field changes from ESMF_FIELDSTATUS_EMPTY to ESMF_FIELDSTATUS_GRIDSET.

mesh ESMF_Mesh to be set in the ESMF_Field.

[indexflag] Indicate how DE-local indices are defined. See section 55.29 for a list of valid indexflag options.

[meshloc] Which part of the mesh to build the Field on. Can be set to either ESMF_MESHLOC_NODE or ESMF_MESHLOC_ELEMENT. If not set, defaults to ESMF_MESHLOC_NODE.

[rc] Return code; equals ESMF_SUCCESS if there are no errors.

27.6.51 ESMF_FieldEmptySet - Set a LocStream in an empty Field

INTERFACE:

```
! Private name; call using ESMF_FieldEmptySet()
subroutine ESMF_FieldEmptySetLocStream(field, locstream, &
  vm, rc)
```

ARGUMENTS:

```
  type(ESMF_Field), intent(inout) :: field
  type(ESMF_LocStream), intent(in) :: locstream
-- The following arguments require argument keyword syntax (e.g. rc=rc). --
  type(ESMF_VM), intent(in), optional :: vm
  integer, intent(out), optional :: rc
```

DESCRIPTION:

Set a ESMF_LocStream in a non-completed ESMF_Field. The ESMF_Field must not be completed for this to succeed. After this operation, the ESMF_Field contains the ESMF_LocStream internally but holds no data. The status of the field changes from ESMF_FIELDSTATUS_EMPTY to ESMF_FIELDSTATUS_GRIDSET or stays ESMF_FIELDSTATUS_GRIDSET.

The arguments are:

field Empty ESMF_Field. After this operation, the ESMF_Field contains the ESMF_LocStream internally but holds no data. The status of the field changes from ESMF_FIELDSTATUS_EMPTY to ESMF_FIELDSTATUS_GRIDSET.

locstream ESMF_LocStream to be set in the ESMF_Field.

[vm] If present, the Field object will only be accessed, and the Grid object set, on those PETs contained in the specified ESMF_VM object. The default is to assume the VM of the current context.

[rc] Return code; equals ESMF_SUCCESS if there are no errors.

27.6.52 ESMF_FieldEmptySet - Set an XGrid in an empty Field

INTERFACE:

```
! Private name; call using ESMF_FieldEmptySet()
subroutine ESMF_FieldEmptySetXGrid(field, xgrid, xgridside, gridindex, rc)
```

ARGUMENTS:

```
  type(ESMF_Field), intent(inout) :: field
  type(ESMF_XGrid), intent(in) :: xgrid
-- The following arguments require argument keyword syntax (e.g. rc=rc). --
  type(ESMF_XGridSide_Flag), intent(in), optional :: xgridside
  integer, intent(in), optional :: gridindex
  integer, intent(out), optional :: rc
```

DESCRIPTION:

Set a xgrid and optional xgridside (default to balanced side `ESMF_XGRIDSIDE_Balanced`) and gridindex (default to 1) in a non-complete `ESMF_Field`. The `ESMF_Field` must not be completed for this to succeed. After this operation, the `ESMF_Field` contains the `ESMF_XGrid` internally but holds no data. The status of the field changes from `ESMF_FIELDSTATUS_EMPTY` to `ESMF_FIELDSTATUS_GRIDSET` or stays `ESMF_FIELDSTATUS_GRIDSET`.

The arguments are:

field Empty `ESMF_Field`. After this operation, the `ESMF_Field` contains the `ESMF_XGrid` internally but holds no data. The status of the field changes from `ESMF_FIELDSTATUS_EMPTY` to `ESMF_FIELDSTATUS_GRIDSET`.

xgrid `ESMF_XGrid` to be set in the `ESMF_Field`.

[xgridside] Side of XGrid to retrieve a DistGrid. For valid predefined values see section 35.2.1. The default value is `ESMF_XGRIDSIDE_BALANCED`.

[gridindex] Index to specify which DistGrid when on side A or side B. The default value is 1.

[rc] Return code; equals `ESMF_SUCCESS` if there are no errors.

27.6.53 ESMF_FieldFill - Fill data into a Field

INTERFACE:

```
subroutine ESMF_FieldFill(field, dataFillScheme, &
  const1, member, step, &
  param1I4, param2I4, param3I4, &
  param1R4, param2R4, param3R4, &
  param1R8, param2R8, param3R8, &
  rc)
```

ARGUMENTS:

```
    type(ESMF_Field), intent(inout) :: field
-- The following arguments require argument keyword syntax (e.g. rc=rc). --
    character(len=*), intent(in), optional :: dataFillScheme
    real(ESMF_KIND_R8), intent(in), optional :: const1
    integer, intent(in), optional :: member
    integer, intent(in), optional :: step
    integer(ESMF_KIND_I4), intent(in), optional :: param1I4
    integer(ESMF_KIND_I4), intent(in), optional :: param2I4
    integer(ESMF_KIND_I4), intent(in), optional :: param3I4
    real(ESMF_KIND_R4), intent(in), optional :: param1R4
    real(ESMF_KIND_R4), intent(in), optional :: param2R4
    real(ESMF_KIND_R4), intent(in), optional :: param3R4
    real(ESMF_KIND_R8), intent(in), optional :: param1R8
    real(ESMF_KIND_R8), intent(in), optional :: param2R8
    real(ESMF_KIND_R8), intent(in), optional :: param3R8
    integer, intent(out), optional :: rc
```

DESCRIPTION:

Fill `field` with data according to `dataFillScheme`. Depending on the chosen fill scheme, the `member` and `step` arguments are used to provide differing fill data patterns.

The arguments are:

field The `ESMF_Field` object to fill with data.

[dataFillScheme] The fill scheme. The available options are "sincos", "one", "const", "random", "nan", and "snan". Defaults to "sincos".

[const1] Constant of real type. Defaults to 0.

[member] Member incrementor. Defaults to 1.

[step] Step incrementor. Defaults to 1.

[param1I4] Optional parameter of typekind I4. The default depends on the specified `dataFillScheme`.

[param2I4] Optional parameter of typekind I4. The default depends on the specified `dataFillScheme`.

[param3I4] Optional parameter of typekind I4. The default depends on the specified `dataFillScheme`.

[param1R4] Optional parameter of typekind R4. The default depends on the specified `dataFillScheme`.

[param2R4] Optional parameter of typekind R4. The default depends on the specified `dataFillScheme`.

[param3R4] Optional parameter of typekind R4. The default depends on the specified `dataFillScheme`.

[param1R8] Optional parameter of typekind R8. The default depends on the specified `dataFillScheme`.

[param2R8] Optional parameter of typekind R8. The default depends on the specified `dataFillScheme`.

[param3R8] Optional parameter of typekind R8. The default depends on the specified `dataFillScheme`.

[rc] Return code; equals `ESMF_SUCCESS` if there are no errors.

27.6.54 ESMF_FieldGather - Gather a Fortran array from an ESMF_Field

INTERFACE:

```
subroutine ESMF_FieldGather<rank><type><kind>(field, farray, &
rootPet, tile, vm, rc)
```

ARGUMENTS:

```
  type(ESMF_Field), intent(in) :: field
  <type>(ESMF_KIND_<kind>), intent(out), target :: farray(<rank>)
  integer, intent(in) :: rootPet
-- The following arguments require argument keyword syntax (e.g. rc=rc). --
  integer, intent(in), optional :: tile
  type(ESMF_VM), intent(in), optional :: vm
  integer, intent(out), optional :: rc
```

STATUS:

- This interface is backward compatible with ESMF versions starting at 5.2.0r. If code using this interface compiles with any version of ESMF starting with 5.2.0r, then it will compile with the current version.

DESCRIPTION:

Gather the data of an ESMF_Field object into the `farray` located on `rootPET`. A single DistGrid tile of `array` must be gathered into `farray`. The optional `tile` argument allows selection of the tile. For Fields defined on a single tile DistGrid the default selection (tile 1) will be correct. The shape of `farray` must match the shape of the tile in Field.

If the Field contains replicating DistGrid dimensions data will be gathered from the numerically higher DEs. Replicated data elements in numericaly lower DEs will be ignored.

The implementation of Scatter and Gather is not sequence index based. If the Field is built on arbitrarily distributed Grid, Mesh, LocStream or XGrid, Gather will not gather data to rootPet from source data points corresponding to the sequence index on rootPet. Instead Gather will gather a contiguous memory range from source PET to rootPet. The size of the memory range is equal to the number of data elements on the source PET. Vice versa for the Scatter operation. In this case, the user should use `ESMF_FieldRedist` to achieve the same data operation result. For examples how to use `ESMF_FieldRedist` to perform Gather and Scatter, please refer to 27.3.32 and 27.3.31.

This version of the interface implements the PET-based blocking paradigm: Each PET of the VM must issue this call exactly once for *all* of its DEs. The call will block until all PET-local data objects are accessible.

For examples and associated documentation regarding this method see Section 27.3.28.

The arguments are:

field The `ESMF_Field` object from which data will be gathered.

{farray} The Fortran array into which to gather data. Only root must provide a valid `farray`, the other PETs may treat `farray` as an optional argument.

rootPet PET that holds the valid destination array, i.e. `farray`.

[tile] The DistGrid tile in `field` from which to gather `farray`. By default `farray` will be gathered from tile 1.

[vm] Optional `ESMF_VM` object of the current context. Providing the VM of the current context will lower the method's overhead.

[rc] Return code; equals `ESMF_SUCCESS` if there are no errors.

27.6.55 ESMF_FieldGet - Get object-wide Field information

INTERFACE:

```
! Private name; call using ESMF_FieldGet()
subroutine ESMF_FieldGetDefault(field, arrayspec, status, &
  geomtype, geom, grid, mesh, locstream, xgrid, array, localarrayList, &
  typekind, rank, dimCount, geomDimCount, ungriddedDimCount, &
  replicatedDimCount, staggerloc, meshloc, xgridside, gridindex, &
  gridToFieldMap, ungriddedLBound, ungriddedUBound, &
  totalLWidth, totalUWidth, localDeCount, ssiLocalDeCount, &
  localDeToDeMap, minIndex, maxIndex, elementCount, &
  localMinIndex, localMaxIndex, localElementCount, isESMFAllocated, &
  name, vm, rc)
```

ARGUMENTS:

```
  type(ESMF_Field), intent(in) :: field
-- The following arguments require argument keyword syntax (e.g. rc=rc). --
  type(ESMF_ArraySpec), intent(out), optional :: arrayspec
  type(ESMF_FieldStatus_Flag),intent(out), optional :: status
  type(ESMF_GeomType_Flag), intent(out), optional :: geomtype
  type(ESMF_Geom), intent(out), optional :: geom
  type(ESMF_Grid), intent(out), optional :: grid
  type(ESMF_Mesh), intent(out), optional :: mesh
  type(ESMF_LocStream), intent(out), optional :: locstream
  type(ESMF_XGrid), intent(out), optional :: xgrid
  type(ESMF_Array), intent(out), optional :: array
  type(ESMF_LocalArray), target, intent(out), optional :: localarrayList(:)
  type(ESMF_TypeKind_Flag), intent(out), optional :: typekind
  integer, intent(out), optional :: rank
  integer, intent(out), optional :: dimCount
  integer, intent(out), optional :: geomDimCount
  integer, intent(out), optional :: ungriddedDimCount
  integer, intent(out), optional :: replicatedDimCount
  type(ESMF_StaggerLoc), intent(out), optional :: staggerloc
  type(ESMF_MeshLoc), intent(out), optional :: meshloc
  type(ESMF_XGridSide_Flag), intent(out), optional :: xgridside
  integer, intent(out), optional :: gridindex
  integer, intent(out), optional :: gridToFieldMap(:)
  integer, intent(out), optional :: ungriddedLBound(:)
  integer, intent(out), optional :: ungriddedUBound(:)
  integer, intent(out), optional :: totalLWidth(:,:)
  integer, intent(out), optional :: totalUWidth(:,:)
```

```
integer, intent(out), optional :: localDeCount
integer, intent(out), optional :: ssiLocalDeCount
integer, intent(out), optional :: localDeToDeMap(:)
integer, intent(out), optional :: minIndex(:)
integer, intent(out), optional :: maxIndex(:)
integer, intent(out), optional :: elementCount(:)
integer, intent(out), optional :: localMinIndex(:)
integer, intent(out), optional :: localMaxIndex(:)
integer, intent(out), optional :: localElementCount(:)
logical, intent(out), optional :: isESMFAllocated
character(len=*), intent(out), optional :: name
type(ESMF_VM), intent(out), optional :: vm
integer, intent(out), optional :: rc
```

STATUS:

- This interface is backward compatible with ESMF versions starting at 5.2.0r - *except those arguments indicated below*.
- This interface was modified since ESMF version 5.2.0r. The fact that code using this interface compiles with the current ESMF version does not guarantee that it compiles with previous versions of this interface. If user code compatibility with version 5.2.0r is desired then care must be taken to limit the use of this interface to features that were available in the 5.2.0r release.
  Changes made after the 5.2.0r release:

  6.3.0r Added argument `vm` in order to offer information about the VM on which the Field was created.

  8.1.0 Added argument `minIndex`. The new argument allows the user to query the global lower bounds of the field data across all PETs.
  Added argument `maxIndex`. The new argument allows the user to query the global upper bounds of the field data across all PETs.
  Added argument `elementCount`. The new argument allows the user to query the global number of items of the field data across all PETs.
  Added argument `localMinIndex`. The new argument allows the user to query the PET local lower bounds globally indexed of the field data.
  Added argument `localMaxIndex`. The new argument allows the user to query the PET local upper bounds globally indexed of the field data.
  Added argument `localElementCount`. The new argument allows the user to query the PET local number of items of the field data.
  Added argument `ssiLocalDeCount` and `localarrayList` to support DE sharing between PETs on the same single system image (SSI).
  Added argument `localDeToDeMap` to support DE handling from the Field level rather than require user to go to Array level.

  8.5.0 Added argument `isESMFAllocated` to support user query of whether ESMF or user is responsible for the data allocation referenced by this object.

  8.6.0 Added argument `geom` to support user query of Geom object.
  Added argument `geomDimCount` for easy access to dimension of underlying Geom object.
  Added argument `ungriddedDimCount` for easy access to the number of ungridded dimensions in the Field object.
  Added argument `replicatedDimCount` for easy access to the number of dimensions across which the Field object is replicated.

DESCRIPTION:

Query an `ESMF_Field` object for various pieces of information. All arguments after the `field` argument are optional. To select individual items use the `named_argument=value` syntax. For an example and associated documentation using this method see section 27.3.3.

The arguments are:

field `ESMF_Field` object to query.

[arrayspec] `ESMF_ArraySpec` object containing the type/kind/rank information of the Field object.

[status] The status of the Field. See section 27.2.1 for a complete list of values.

[geomtype] The type of geometry on which the Field is built. See section 55.23 for the range of values.

[geom] `ESMF_Geom`.

[grid] `ESMF_Grid`.

[mesh] STATUS:*This argument is excluded from the backward compatibility statement*.
`ESMF_Mesh`.

[locstream] STATUS:*This argument is excluded from the backward compatibility statement*.
`ESMF_LocStream`.

[xgrid] STATUS:*This argument is excluded from the backward compatibility statement*.
`ESMF_XGrid`.

[array] `ESMF_Array`.

[localarrayList] Upon return this holds a list of the associated `ESMC_LocalArray` objects. `localarrayList` must be allocated to be of size `localDeCount` or `ssiLocalDeCount`.

[typekind] TypeKind specifier for Field. See section 55.61 for a complete list of values.

[rank] Number of dimensions in the physical memory of the `field` data. It is identical to dimCount when the corresponding grid is a non-arbitrary grid. It is less than dimCount when the grid is arbitrarily distributed. For an detailed discussion of this parameter, please see section 27.3.23 and section 27.3.24.

[dimCount] Number of geometrical dimensions in `field`. For an detailed discussion of this parameter, please see section 27.3.23 and section 27.3.24.

[geomDimCount] Number of dimensions in the underlying Geom object.

[ungriddedDimCount] Number of ungridded dimensions in the Field object.

[replicatedDimCount] Number of replicated dimensions in the Field object.

[staggerloc] Stagger location of data in grid cells. For valid predefined values and interpretation of results see section 32.2.6.

[meshloc] STATUS:*This argument is excluded from the backward compatibility statement*.
The part of the mesh to build the Field on. Can be either `ESMF_MESHLOC_NODE` or `ESMF_MESHLOC_ELEMENT`. If not set, defaults to `ESMF_MESHLOC_NODE`.

[xgridside] STATUS:*This argument is excluded from the backward compatibility statement*.
The side of the XGrid that the Field was created on. See section 35.2.1 for a complete list of values.

[gridIndex] STATUS:*This argument is excluded from the backward compatibility statement*.
If xgridside is `ESMF_XGRIDSIDE_A` or `ESMF_XGRIDSIDE_B` then this index tells which Grid/Mesh on that side the Field was created on.

[gridToFieldMap] List with number of elements equal to the `grid`'s dimCount. The list elements map each dimension of the `grid` to a dimension in the `field` by specifying the appropriate `field` dimension index. The default is to map all of the `grid`'s dimensions against the lowest dimensions of the `field` in sequence, i.e. `gridToFieldMap` = (/1,2,3,.../). The total ungridded dimensions in the `field` are the total `field` dimensions less the dimensions in the `grid`. Ungridded dimensions must be in the same order they are stored in the field.

[ungriddedLBound] Lower bounds of the ungridded dimensions of the `field`. The number of elements in the `ungriddedLBound` argument must be equal or greater to `ungriddedDimCount`, the number of ungridded dimensions in the `field`. All ungridded dimensions of the `field` are also undistributed. Note that the ordering of the ungridded dimensions is the same as their order in the `field`.

[ungriddedUBound] Upper bounds of the ungridded dimensions of the `field`. The number of elements in the `ungriddedUBound` argument must be equal or greater to `ungriddedDimCount`, the number of ungridded dimensions in the `field`. All ungridded dimensions of the `field` are also undistributed. Note that the ordering of the ungridded dimensions is the same as their order in the `field`.

[totalLWidth] Lower bound of halo region. The size of the first dimension of this array is the number of gridded dimensions in the `field`. However, ordering of the elements needs to be the same as they appear in the `field`. Values default to 0. If values for totalLWidth are specified they must be reflected in the size of the `field`. That is, for each gridded dimension the `field` size should be max(`totalLWidth` + `totalUWidth` + `computationalCount`, `exclusiveCount`). The size of the 2nd dimension of this array is localDeCount.

[totalUWidth] Upper bound of halo region. The size of the first dimension of this array is the number of gridded dimensions in the `field`. However, ordering of the elements needs to be the same as they appear in the `field`. Values default to 0. If values for totalUWidth are specified they must be reflected in the size of the `field`. That is, for each gridded dimension the `field` size should max(`totalLWidth` + `totalUWidth` + `computationalCount`, `exclusiveCount`). The size of the 2nd dimension of this array is localDeCount.

[localDeCount] Upon return this holds the number of PET-local DEs defined in the DELayout associated with the Field object.

[ssiLocalDeCount] The number of DEs in the Field available to the local PET. This includes DEs that are local to other PETs on the same SSI, that are accessible via shared memory.

[localDeToDeMap] Mapping between localDe indices and the (global) DEs associated with the local PET. The localDe index variables are discussed in sections 51.3.7 and 29.2.5. The provided actual argument must be of size `localDeCount`, or `ssiLocalDeCount`, and will be filled accordingly.

[minIndex] Upon return this holds the global lower bounds of the field data across all PETs. This information will be identical across all PETs. `minIndex` must be allocated to be of size equal to the field rank.

[maxIndex] Upon return this holds the global upper bounds of the field data across all PETs. This information will be identical across all PETs. `maxIndex` must be allocated to be of size equal to the field rank.

[elementCount] Upon return this holds the global number of items of the field data across all PETs. This information will be identical across all PETs. `elementCount` must be allocated to be of size equal to the field rank.

[localMinIndex] Upon return this holds the PET local lower bounds globally indexed of the field data. `localMinIndex` must be allocated to be of size equal to the field rank.

[localMaxIndex] Upon return this holds the PET local upper bounds globally indexed of the field data. `localMaxIndex` must be allocated to be of size equal to the field rank.

[localElementCount] Upon return this holds the PET local number of items of the field data. `localElementCount` must be allocated to be of size equal to the field rank.

[isESMFAllocated] Set to `.true.` for data allocations held by ESMF. Set to `.false.` otherwise.

[name] Name of the Field object.

[vm] The VM on which the Field object was created.

[rc] Return code; equals `ESMF_SUCCESS` if there are no errors.

27.6.56 ESMF_FieldGet - Get a DE-local Fortran array pointer from a Field

INTERFACE:

```
! Private name; call using ESMF_FieldGet()
subroutine ESMF_FieldGetDataPtr<rank><type><kind>(field, localDe, &
farrayPtr, exclusiveLBound, exclusiveUBound, exclusiveCount, &
computationalLBound, computationalUBound, computationalCount, &
totalLBound, totalUBound, totalCount, rc)
```

ARGUMENTS:

```
  type(ESMF_Field), intent(in) :: field
-- The following arguments require argument keyword syntax (e.g. rc=rc). --
  integer, intent(in), optional :: localDe
  <type> (ESMF_KIND_<kind>), pointer :: farrayPtr(<rank>)
  integer, intent(out), optional :: exclusiveLBound(:)
  integer, intent(out), optional :: exclusiveUBound(:)
  integer, intent(out), optional :: exclusiveCount(:)
  integer, intent(out), optional :: computationalLBound(:)
  integer, intent(out), optional :: computationalUBound(:)
  integer, intent(out), optional :: computationalCount(:)
  integer, intent(out), optional :: totalLBound(:)
  integer, intent(out), optional :: totalUBound(:)
  integer, intent(out), optional :: totalCount(:)
  integer, intent(out), optional :: rc
```

STATUS:

- This interface is backward compatible with ESMF versions starting at 5.2.0r. If code using this interface compiles with any version of ESMF starting with 5.2.0r, then it will compile with the current version.

DESCRIPTION:

Get a Fortran pointer to DE-local memory allocation within `field`. For convenience DE-local bounds can be queried at the same time. For an example and associated documentation using this method see section 27.3.2.

The arguments are:

field `ESMF_Field` object.

[localDe] Local DE for which information is requested. `[0,..,localDeCount-1]`. For `localDeCount==1` the `localDe` argument may be omitted, in which case it will default to `localDe=0`.

farrayPtr Fortran array pointer which will be pointed at DE-local memory allocation. It depends on the specific entry point of `ESMF_FieldCreate()` used during `field` creation, which Fortran operations are supported on the returned `farrayPtr`. See 27.4 for more details.

[exclusiveLBound] Upon return this holds the lower bounds of the exclusive region. `exclusiveLBound` must be allocated to be of size equal to `field`'s `dimCount`. See section 29.2.6 for a description of the regions and their associated bounds and counts.

[exclusiveUBound] Upon return this holds the upper bounds of the exclusive region. `exclusiveUBound` must be allocated to be of size equal to `field`'s `dimCount`. See section 29.2.6 for a description of the regions and their associated bounds and counts.

[exclusiveCount] Upon return this holds the number of items, `exclusiveUBound-exclusiveLBound+1`, in the exclusive region per dimension. `exclusiveCount` must be allocated to be of size equal to `field`'s `dimCount`. See section 29.2.6 for a description of the regions and their associated bounds and counts.

[computationalLBound] Upon return this holds the lower bounds of the computational region. `computationalLBound` must be allocated to be of size equal to `field`'s `dimCount`. See section 29.2.6 for a description of the regions and their associated bounds and counts.

[computationalUBound] Upon return this holds the lower bounds of the computational region. `computationalUBound` must be allocated to be of size equal to `field`'s `dimCount`. See section 29.2.6 for a description of the regions and their associated bounds and counts.

[computationalCount] Upon return this holds the number of items in the computational region per dimension (i.e. `computationalUBound-computationalLBound+1`). `computationalCount` must be allocated to be of size equal to `field`'s `dimCount`. See section 29.2.6 for a description of the regions and their associated bounds and counts.

[totalLBound] Upon return this holds the lower bounds of the total region. `totalLBound` must be allocated to be of size equal to `field`'s `dimCount`. See section 29.2.6 for a description of the regions and their associated bounds and counts.

[totalUBound] Upon return this holds the lower bounds of the total region. `totalUBound` must be allocated to be of size equal to `field`'s `dimCount`. See section 29.2.6 for a description of the regions and their associated bounds and counts.

[totalCount] Upon return this holds the number of items in the total region per dimension (i.e. `totalUBound-totalLBound+1`). `computationalCount` must be allocated to be of size equal to `field`'s `dimCount`. See section 29.2.6 for a description of the regions and their associated bounds and counts.

[rc] Return code; equals `ESMF_SUCCESS` if there are no errors.

27.6.57 ESMF_FieldGetBounds - Get DE-local Field data bounds

INTERFACE:

```
! Private name; call using ESMF_FieldGetBounds()
subroutine ESMF_FieldGetBounds(field, localDe, &
  exclusiveLBound, exclusiveUBound, exclusiveCount, computationalLBound, &
  computationalUBound, computationalCount, totalLBound, &
  totalUBound, totalCount, rc)
```

ARGUMENTS:

```
     type(ESMF_Field), intent(in) :: field
 -- The following arguments require argument keyword syntax (e.g. rc=rc). --
     integer, intent(in), optional :: localDe
     integer, intent(out), optional :: exclusiveLBound(:)
     integer, intent(out), optional :: exclusiveUBound(:)
     integer, intent(out), optional :: exclusiveCount(:)
     integer, intent(out), optional :: computationalLBound(:)
     integer, intent(out), optional :: computationalUBound(:)
     integer, intent(out), optional :: computationalCount(:)
     integer, intent(out), optional :: totalLBound(:)
     integer, intent(out), optional :: totalUBound(:)
     integer, intent(out), optional :: totalCount(:)
     integer, intent(out), optional :: rc
```

STATUS:

- This interface is backward compatible with ESMF versions starting at 5.2.0r. If code using this interface compiles with any version of ESMF starting with 5.2.0r, then it will compile with the current version.

DESCRIPTION:

This method returns the bounds information of a field that consists of a internal grid and a internal array. The exclusive and computational bounds are shared between the grid and the array but the total bounds are the array bounds plus the halo width. The count is the number of elements between each bound pair.

The arguments are:

field Field to get the information from.

[localDe] Local DE for which information is requested. `[0,..,localDeCount-1]`. For `localDeCount==1` the `localDe` argument may be omitted, in which case it will default to `localDe=0`.

[exclusiveLBound] Upon return this holds the lower bounds of the exclusive region. `exclusiveLBound` must be allocated to be of size equal to the field rank. Please see section 32.3.19 for a description of the regions and their associated bounds and counts.

[exclusiveUBound] Upon return this holds the upper bounds of the exclusive region. `exclusiveUBound` must be allocated to be of size equal to the field rank. Please see section 32.3.19 for a description of the regions and their associated bounds and counts.

[exclusiveCount] Upon return this holds the number of items, `exclusiveUBound-exclusiveLBound+1`, in the exclusive region per dimension. `exclusiveCount` must be allocated to be of size equal to the field rank. Please see section 32.3.19 for a description of the regions and their associated bounds and counts.

[computationalLBound] Upon return this holds the lower bounds of the stagger region. `computationalLBound` must be allocated to be of size equal to the field rank. Please see section 32.3.19 for a description of the regions and their associated bounds and counts.

[computationalUBound] Upon return this holds the upper bounds of the stagger region. `computationalUBound` must be allocated to be of size equal to the field rank. Please see section 32.3.19 for a description of the regions and their associated bounds and counts.

[computationalCount] Upon return this holds the number of items in the computational region per dimension (i.e. `computationalUBound-computationalLBound+1`). `computationalCount` must be allocated to be of size equal to the field rank. Please see section 32.3.19 for a description of the regions and their associated bounds and counts.

[totalLBound] Upon return this holds the lower bounds of the total region. `totalLBound` must be allocated to be of size equal to the field rank.

[totalUBound] Upon return this holds the upper bounds of the total region. `totalUBound` must be allocated to be of size equal to the field rank.

[totalCount] Upon return this holds the number of items in the total region per dimension (i.e. `totalUBound-totalLBound+1`). `totalCount` must be allocated to be of size equal to the field rank.

[rc] Return code; equals `ESMF_SUCCESS` if there are no errors.

27.6.58 ESMF_FieldHalo - Execute a FieldHalo operation

INTERFACE:

```
   subroutine ESMF_FieldHalo(field, routehandle,  &
                             routesyncflag, finishedflag, checkflag, rc)
```

ARGUMENTS:

```
     type(ESMF_Field),           intent(inout)          :: field
     type(ESMF_RouteHandle),     intent(inout)          :: routehandle
 -- The following arguments require argument keyword syntax (e.g. rc=rc). --
     type(ESMF_RouteSync_Flag), intent(in),  optional  :: routesyncflag
     logical,                   intent(out), optional  :: finishedflag
     logical,                   intent(in),  optional  :: checkflag
     integer,                   intent(out), optional  :: rc
```

STATUS:

- This interface is backward compatible with ESMF versions starting at 5.2.0r. If code using this interface compiles with any version of ESMF starting with 5.2.0r, then it will compile with the current version.

DESCRIPTION:

Execute a precomputed Field halo operation for `field`. The `field` argument must match the Field used during `ESMF_FieldHaloStore()` in *type*, *kind*, and memory layout of the *gridded* dimensions. However, the size, number, and index order of *ungridded* dimensions may be different. See section 38.2.5 for a more detailed discussion of RouteHandle reusability.

See `ESMF_FieldHaloStore()` on how to precompute `routehandle`.

This call is *collective* across the current VM.

field `ESMF_Field` containing data to be haloed.

routehandle Handle to the precomputed Route.

[routesyncflag] Indicate communication option. Default is `ESMF_ROUTESYNC_BLOCKING`, resulting in a blocking operation. See section 55.53 for a complete list of valid settings.

[finishedflag] Used in combination with `routesyncflag = ESMF_ROUTESYNC_NBTESTFINISH`. Returned `finishedflag` equal to `.true.` indicates that all operations have finished. A value of `.false.` indicates that there are still unfinished operations that require additional calls with `routesyncflag = ESMF_ROUTESYNC_NBTESTFINISH`, or a final call with `routesyncflag = ESMF_ROUTESYNC_NBWAITFINISH`. For all other `routesyncflag` settings the returned value in `finishedflag` is always `.true.`.

[checkflag] If set to `.TRUE.` the input Field pair will be checked for consistency with the precomputed operation provided by `routehandle`. If set to `.FALSE.` *(default)* only a very basic input check will be performed, leaving many inconsistencies undetected. Set `checkflag` to `.FALSE.` to achieve highest performance.

[rc] Return code; equals `ESMF_SUCCESS` if there are no errors.

27.6.59 ESMF_FieldHaloRelease - Release resources associated with a Field halo operation

INTERFACE:

```
subroutine ESMF_FieldHaloRelease(routehandle, noGarbage, rc)
```

ARGUMENTS:

```
     type(ESMF_RouteHandle), intent(inout)           :: routehandle
 -- The following arguments require argument keyword syntax (e.g. rc=rc). --
     logical,                intent(in),   optional  :: noGarbage
     integer,                intent(out),  optional  :: rc
```

STATUS:

- This interface is backward compatible with ESMF versions starting at 5.2.0r. If code using this interface compiles with any version of ESMF starting with 5.2.0r, then it will compile with the current version.
- This interface was modified since ESMF version 5.2.0r. The fact that code using this interface compiles with the current ESMF version does not guarantee that it compiles with previous versions of this interface. If user code compatibility with version 5.2.0r is desired then care must be taken to limit the use of this interface to features that were available in the 5.2.0r release.
  Changes made after the 5.2.0r release:

  8.0.0 Added argument `noGarbage`. The argument provides a mechanism to override the default garbage collection mechanism when destroying an ESMF object.

DESCRIPTION:

Release resources associated with a Field halo operation. After this call `routehandle` becomes invalid.

routehandle Handle to the precomputed Route.

[noGarbage] If set to `.TRUE.` the object will be fully destroyed and removed from the ESMF garbage collection system. Note however that under this condition ESMF cannot protect against accessing the destroyed object through dangling aliases – a situation which may lead to hard to debug application crashes.

It is generally recommended to leave the `noGarbage` argument set to `.FALSE.` (the default), and to take advantage of the ESMF garbage collection system which will prevent problems with dangling aliases or incorrect sequences of destroy calls. However this level of support requires that a small remnant of the object is kept in memory past the destroy call. This can lead to an unexpected increase in memory consumption over the course of execution in applications that use temporary ESMF objects. For situations where the repeated creation and destruction of temporary objects leads to memory issues, it is recommended to call with `noGarbage` set to `.TRUE.`, fully removing the entire temporary object from memory.

[rc] Return code; equals `ESMF_SUCCESS` if there are no errors.

27.6.60 ESMF_FieldHaloStore - Store a FieldHalo operation

INTERFACE:

```
subroutine ESMF_FieldHaloStore(field, routehandle,  &
  startregion, haloLDepth, haloUDepth, rc)
```

ARGUMENTS:

```
    type(ESMF_Field),            intent(inout)           :: field
    type(ESMF_RouteHandle),      intent(inout)           :: routehandle
-- The following arguments require argument keyword syntax (e.g. rc=rc). --
    type(ESMF_StartRegion_Flag), intent(in),    optional :: startregion
    integer,                     intent(in),    optional :: haloLDepth(:)
    integer,                     intent(in),    optional :: haloUDepth(:)
    integer,                     intent(out),   optional :: rc
```

STATUS:

- This interface is backward compatible with ESMF versions starting at 5.2.0r. If code using this interface compiles with any version of ESMF starting with 5.2.0r, then it will compile with the current version.

DESCRIPTION:

Store a Field halo operation over the data in `field`. By default, i.e. without specifying `startregion`, `haloLDepth` and `haloUDepth`, all elements in the total Field region that lie outside the exclusive region will be considered potential destination elements for halo. However, only those elements that have a corresponding halo source element, i.e. an exclusive element on one of the DEs, will be updated under the halo operation. Elements that have no associated source remain unchanged under halo.

Specifying `startregion` allows to change the shape of the effective halo region from the inside. Setting this flag to `ESMF_STARTREGION_COMPUTATIONAL` means that only elements outside the computational region of the Field are considered for potential destination elements for the halo operation. The default is `ESMF_STARTREGION_EXCLUSIVE`.

The `haloLDepth` and `haloUDepth` arguments allow to reduce the extent of the effective halo region. Starting at the region specified by `startregion`, the `haloLDepth` and `haloUDepth` define a halo depth in each direction. Note that the maximum halo region is limited by the total Field region, independent of the actual `haloLDepth` and `haloUDepth` setting. The total Field region is local DE specific. The `haloLDepth` and `haloUDepth` are interpreted as the maximum desired extent, reducing the potentially larger region available for the halo operation.

The routine returns an `ESMF_RouteHandle` that can be used to call `ESMF_FieldHalo()` on any Field that matches `field` in *type*, *kind*, and memory layout of the *gridded* dimensions. However, the size, number, and index order of *ungridded* dimensions may be different. See section 38.2.5 for a more detailed discussion of RouteHandle reusability.

This call is *collective* across the current VM.

field `ESMF_Field` containing data to be haloed. The data in this Field may be destroyed by this call.

routehandle Handle to the precomputed Route.

[startregion] The start of the effective halo region on every DE. The default setting is `ESMF_STARTREGION_EXCLUSIVE`, rendering all non-exclusive elements potential halo destination elements. See section 55.56 for a complete list of valid settings.

[haloLDepth] This vector specifies the lower corner of the effective halo region with respect to the lower corner of `startregion`. The size of `haloLDepth` must equal the number of distributed Array dimensions.

[haloUDepth] This vector specifies the upper corner of the effective halo region with respect to the upper corner of `startregion`. The size of `haloUDepth` must equal the number of distributed Array dimensions.

[rc] Return code; equals `ESMF_SUCCESS` if there are no errors.

27.6.61 ESMF_FieldIsCreated - Check whether a Field object has been created

INTERFACE:

```
function ESMF_FieldIsCreated(field, rc)
```

RETURN VALUE:

```
logical :: ESMF_FieldIsCreated
```

ARGUMENTS:

```
     type(ESMF_Field), intent(in)            :: field
 -- The following arguments require argument keyword syntax (e.g. rc=rc). --
     integer,             intent(out), optional :: rc
```

DESCRIPTION:

Return `.true.` if the `field` has been created. Otherwise return `.false.`. If an error occurs, i.e. `rc /= ESMF_SUCCESS` is returned, the return value of the function will also be `.false.`.

The arguments are:

field `ESMF_Field` queried.

[rc] Return code; equals `ESMF_SUCCESS` if there are no errors.

27.6.62 ESMF_FieldLog - Log Field information

INTERFACE:

```
subroutine ESMF_FieldLog(field, prefix, logMsgFlag, deepFlag, rc)
```

ARGUMENTS:

```
    type(ESMF_Field),       intent(in)              :: field
-- The following arguments require argument keyword syntax (e.g. rc=rc). --
    character(len=*),       intent(in),   optional  :: prefix
    type(ESMF_LogMsg_Flag), intent(in),   optional  :: logMsgFlag
    logical,                intent(in),   optional  :: deepFlag
    integer, intent(out),                 optional  :: rc
```

DESCRIPTION:

Write information about `field` to the ESMF default Log.

The arguments are:

field The `ESMF_Field` object logged.

[prefix] String to prefix the log message. Default is no prefix.

[logMsgFlag] Type of log message generated. See section 50.2.3 for a list of valid message types. Default is `ESMF_LOGMSG_INFO`.

[deepFlag] When set to `.false.` (default), only log top level information about the Field. When set to `.true.`, additionally log deep information.

[rc] Return code; equals `ESMF_SUCCESS` if there are no errors.

27.6.63 ESMF_FieldPrint - Print Field information

INTERFACE:

```
subroutine ESMF_FieldPrint(field, rc)
```

ARGUMENTS:

```
    type(ESMF_Field), intent(in)            :: field
-- The following arguments require argument keyword syntax (e.g. rc=rc). --
    integer,          intent(out), optional :: rc
```

STATUS:

- This interface is backward compatible with ESMF versions starting at 5.2.0r. If code using this interface compiles with any version of ESMF starting with 5.2.0r, then it will compile with the current version.

DESCRIPTION:

Prints information about the `field` to `stdout`. This subroutine goes through the internal data members of a field data type and prints information of each data member.

The arguments are:

field An `ESMF_Field` object.

[rc] Return code; equals `ESMF_SUCCESS` if there are no errors.

27.6.64 ESMF_FieldRead - Read Field data from a file

INTERFACE:

```
   subroutine ESMF_FieldRead(field, fileName,        &
       variableName, timeslice, iofmt, rc)
```

ARGUMENTS:

```
     type(ESMF_Field),      intent(inout)          :: field
     character(*),          intent(in)             :: fileName
 -- The following arguments require argument keyword syntax (e.g. rc=rc). --
     character(*),          intent(in),  optional  :: variableName
     integer,               intent(in),  optional  :: timeslice
     type(ESMF_IOFmt_Flag), intent(in),  optional  :: iofmt
     integer,               intent(out), optional  :: rc
```

DESCRIPTION:

Read Field data from a file and put it into an ESMF_Field object. For this API to be functional, the environment variable `ESMF_PIO` should be set to either "internal" or "external" when the ESMF library is built. Please see the section on Data I/O, 39.2.

The arguments are:

field The `ESMF_Field` object in which the read data is returned.

fileName The name of the file from which Field data is read. If the Field is a multi-tile Array, then fileName must contain exactly one instance of "*"; this is a placeholder that will be replaced by the tile number, with each tile being read from a separate file. (For example, for a fileName of "myfile*.nc", tile 1 will be read from "myfile1.nc", tile 2 from "myfile2.nc", etc.) (This handling of the fileName for multi-tile I/O is subject to change.)

[variableName] Variable name in the file; default is the "name" of Field. Use this argument only in the I/O format (such as NetCDF) that supports variable name. If the I/O format does not support this (such as binary format), ESMF will return an error code.

[timeslice] Number of slices to be read from file, starting from the 1st slice

[iofmt] The I/O format. Please see Section 55.30 for the list of options. If not present, defaults to `ESMF_IOFMT_NETCDF`.

[rc] Return code; equals `ESMF_SUCCESS` if there are no errors.

27.6.65 ESMF_FieldRedist - Execute a Field redistribution

INTERFACE:

```
subroutine ESMF_FieldRedist(srcField, dstField, routehandle,  &
  checkflag, rc)
```

ARGUMENTS:

```
        type(ESMF_Field),       intent(in),optional     :: srcField
        type(ESMF_Field),       intent(inout),optional  :: dstField
        type(ESMF_RouteHandle), intent(inout)           :: routehandle
-- The following arguments require argument keyword syntax (e.g. rc=rc). --
        logical,                intent(in),   optional  :: checkflag
        integer,                intent(out),  optional  :: rc
```

STATUS:

- This interface is backward compatible with ESMF versions starting at 5.2.0r. If code using this interface compiles with any version of ESMF starting with 5.2.0r, then it will compile with the current version.

DESCRIPTION:

Execute a precomputed Field redistribution from `srcField` to `dstField`. Both `srcField` and `dstField` must match the respective Fields used during `ESMF_FieldRedistStore()` in *type*, *kind*, and memory layout of the *gridded* dimensions. However, the size, number, and index order of *ungridded* dimensions may be different. See section 38.2.5 for a more detailed discussion of RouteHandle reusability.

The `srcField` and `dstField` arguments are optional in support of the situation where `srcField` and/or `dstField` are not defined on all PETs. The `srcField` and `dstField` must be specified on those PETs that hold source or destination DEs, respectively, but may be omitted on all other PETs. PETs that hold neither source nor destination DEs may omit both arguments.

It is erroneous to specify the identical Field object for `srcField` and `dstField` arguments.

See `ESMF_FieldRedistStore()` on how to precompute `routehandle`.

This call is *collective* across the current VM.

For examples and associated documentation regarding this method see Section 27.3.30.

[srcField] `ESMF_Field` with source data.

[dstField] `ESMF_Field` with destination data.

routehandle Handle to the precomputed Route.

[checkflag] If set to `.TRUE.` the input Field pair will be checked for consistency with the precomputed operation provided by `routehandle`. If set to `.FALSE.` *(default)* only a very basic input check will be performed, leaving many inconsistencies undetected. Set `checkflag` to `.FALSE.` to achieve highest performance.

[rc] Return code; equals `ESMF_SUCCESS` if there are no errors.

27.6.66 ESMF_FieldRedistRelease - Release resources associated with Field redistribution

INTERFACE:

```
subroutine ESMF_FieldRedistRelease(routehandle, noGarbage, rc)
```

ARGUMENTS:

```
        type(ESMF_RouteHandle), intent(inout)           :: routehandle
 -- The following arguments require argument keyword syntax (e.g. rc=rc). --
        logical,                intent(in),   optional  :: noGarbage
        integer,                intent(out),  optional  :: rc
```

STATUS:

- This interface is backward compatible with ESMF versions starting at 5.2.0r. If code using this interface compiles with any version of ESMF starting with 5.2.0r, then it will compile with the current version.
- This interface was modified since ESMF version 5.2.0r. The fact that code using this interface compiles with the current ESMF version does not guarantee that it compiles with previous versions of this interface. If user code compatibility with version 5.2.0r is desired then care must be taken to limit the use of this interface to features that were available in the 5.2.0r release.
  Changes made after the 5.2.0r release:

  8.0.0 Added argument `noGarbage`. The argument provides a mechanism to override the default garbage collection mechanism when destroying an ESMF object.

DESCRIPTION:

Release resources associated with a Field redistribution. After this call `routehandle` becomes invalid.

routehandle Handle to the precomputed Route.

[noGarbage] If set to `.TRUE.` the object will be fully destroyed and removed from the ESMF garbage collection system. Note however that under this condition ESMF cannot protect against accessing the destroyed object through dangling aliases – a situation which may lead to hard to debug application crashes.

It is generally recommended to leave the `noGarbage` argument set to `.FALSE.` (the default), and to take advantage of the ESMF garbage collection system which will prevent problems with dangling aliases or incorrect sequences of destroy calls. However this level of support requires that a small remnant of the object is kept in memory past the destroy call. This can lead to an unexpected increase in memory consumption over the course of execution in applications that use temporary ESMF objects. For situations where the repeated creation and destruction of temporary objects leads to memory issues, it is recommended to call with `noGarbage` set to `.TRUE.`, fully removing the entire temporary object from memory.

[rc] Return code; equals `ESMF_SUCCESS` if there are no errors.

27.6.67 ESMF_FieldRedistStore - Precompute Field redistribution with a local factor argument

INTERFACE:

```
! Private name; call using ESMF_FieldRedistStore()
subroutine ESMF_FieldRedistStore<type><kind>(srcField, dstField, &
       routehandle, factor, srcToDstTransposeMap, &
       ignoreUnmatchedIndices, rc)
```

ARGUMENTS:

```
     type(ESMF_Field),         intent(in)            :: srcField
     type(ESMF_Field),         intent(inout)         :: dstField
     type(ESMF_RouteHandle),   intent(inout)         :: routehandle
     <type>(ESMF_KIND_<kind>), intent(in)            :: factor
 -- The following arguments require argument keyword syntax (e.g. rc=rc). --
     integer,                  intent(in),  optional :: srcToDstTransposeMap(:)
     logical,                  intent(in),  optional :: ignoreUnmatchedIndices
     integer,                  intent(out), optional :: rc
```

STATUS:

- This interface is backward compatible with ESMF versions starting at 5.2.0r. If code using this interface compiles with any version of ESMF starting with 5.2.0r, then it will compile with the current version.
- This interface was modified since ESMF version 5.2.0r. The fact that code using this interface compiles with the current ESMF version does not guarantee that it compiles with previous versions of this interface. If user code compatibility with version 5.2.0r is desired then care must be taken to limit the use of this interface to features that were available in the 5.2.0r release.
  Changes made after the 5.2.0r release:

  7.0.0 Added argument `ignoreUnmatchedIndices` to support sparse matrices that contain elements with indices that do not have a match within the source or destination Array.

DESCRIPTION:

`ESMF_FieldRedistStore()` is a collective method across all PETs of the current Component. The interface of the method is overloaded, allowing – in principle – each PET to call into `ESMF_FieldRedistStore()` through a different entry point. Restrictions apply as to which combinations are sensible. All other combinations result in ESMF run time errors. The complete semantics of the `ESMF_FieldRedistStore()` method, as provided through the separate entry points shown in 27.6.67 and 27.6.68, is described in the following paragraphs as a whole.

Store a Field redistribution operation from `srcField` to `dstField`. Interface 27.6.67 allows PETs to specify a `factor` argument. PETs not specifying a `factor` argument call into interface 27.6.68. If multiple PETs specify the `factor` argument, its type and kind, as well as its value must match across all PETs. If none of the PETs specify a `factor` argument the default will be a factor of 1. The resulting factor is applied to all of the source data during redistribution, allowing scaling of the data, e.g. for unit transformation.

Both `srcField` and `dstField` are interpreted as sequentialized vectors. The sequence is defined by the order of DistGrid dimensions and the order of tiles within the DistGrid or by user-supplied arbitrary sequence indices. See section 29.2.18 for details on the definition of *sequence indices*.

Source Field, destination Field, and the factor may be of different <type><kind>. Further, source and destination Fields may differ in shape, however, the number of elements must match.

The default redistribution operation, when `srcToDstTransposeMap` is not specified, corresponds to the identity mapping: each element of the sequentialized source Field is copied to the sequentialized destination Field element in order.

If the `srcToDstTransposeMap` argument is provided it must be identical across all PETs. The `srcToDstTransposeMap` allows source and destination Field dimensions to be transposed during the redistribution. To support this option, the number of source and destination Field dimensions must be equal and the size of the associated dimensions must match. See section 29.2.17 for more details about the use of the `srcToDstTransposeMap` argument.

It is erroneous to specify the identical Field object for `srcField` and `dstField` arguments.

The routine returns an `ESMF_RouteHandle` that can be used to call `ESMF_FieldRedist()` on any pair of Fields that matches `srcField` and `dstField` in *type*, *kind*, and memory layout of the *gridded* dimensions. However, the size, number, and index order of *ungridded* dimensions may be different. See section 38.2.5 for a more detailed discussion of RouteHandle reusability.

This method is overloaded for:
`ESMF_TYPEKIND_I4`, `ESMF_TYPEKIND_I8`,
`ESMF_TYPEKIND_R4`, `ESMF_TYPEKIND_R8`.

This call is *collective* across the current VM.

For examples and associated documentation regarding this method see Section 27.3.30.

The arguments are:

srcField `ESMF_Field` with source data.

dstField `ESMF_Field` with destination data. The data in this Field may be destroyed by this call.

routehandle Handle to the precomputed Route.

factor Factor by which to multiply data. Default is 1. See full method description above for details on the interplay with other PETs.

[srcToDstTransposeMap] A list with as many entries as there are dimensions in `srcField`, or `tileCount` times this many entries. Each entry maps the corresponding `srcField` dimension against the specified `dstField` dimension. Mixing distributed and undistributed dimensions is supported. Negative entries reverse the order of elements along the specified dimension when going from source to destination. When providing $rank \times tileCount$ elements in `srcToDstTransposeMap`, each block of size `rank` is associated with the corresponding tile (in order), and interpreted as the tile-specific transpose map.

[ignoreUnmatchedIndices] A logical flag that affects the behavior for when not all elements match between the `srcField` and `dstField` side. The default setting is `.false.`, indicating that it is an error when such a situation is encountered. Setting `ignoreUnmatchedIndices` to `.true.` ignores unmatched indices.

[rc] Return code; equals `ESMF_SUCCESS` if there are no errors.

27.6.68 ESMF_FieldRedistStore - Precompute Field redistribution without a local factor argument

INTERFACE:

```
! Private name; call using ESMF_FieldRedistStore()
  subroutine ESMF_FieldRedistStoreNF(srcField, dstField, &
      routehandle, srcToDstTransposeMap, &
      ignoreUnmatchedIndices, rc)
```

ARGUMENTS:

```
        type(ESMF_Field),       intent(in)            :: srcField
        type(ESMF_Field),       intent(inout)         :: dstField
        type(ESMF_RouteHandle), intent(inout)         :: routehandle
-- The following arguments require argument keyword syntax (e.g. rc=rc). --
        integer,                intent(in), optional  :: srcToDstTransposeMap(:)
        logical,                intent(in), optional  :: ignoreUnmatchedIndices
        integer,                intent(out), optional :: rc
```

STATUS:

- This interface is backward compatible with ESMF versions starting at 5.2.0r. If code using this interface compiles with any version of ESMF starting with 5.2.0r, then it will compile with the current version.

DESCRIPTION:

`ESMF_FieldRedistStore()` is a collective method across all PETs of the current Component. The interface of the method is overloaded, allowing – in principle – each PET to call into `ESMF_FieldRedistStore()` through a different entry point. Restrictions apply as to which combinations are sensible. All other combinations result in ESMF run time errors. The complete semantics of the `ESMF_FieldRedistStore()` method, as provided through the separate entry points shown in 27.6.67 and 27.6.68, is described in the following paragraphs as a whole.

Store a Field redistribution operation from `srcField` to `dstField`. Interface 27.6.67 allows PETs to specify a `factor` argument. PETs not specifying a `factor` argument call into interface 27.6.68. If multiple PETs specify the `factor` argument, its type and kind, as well as its value must match across all PETs. If none of the PETs specify a `factor` argument the default will be a factor of 1. The resulting factor is applied to all of the source data during redistribution, allowing scaling of the data, e.g. for unit transformation.

Both `srcField` and `dstField` are interpreted as sequentialized vectors. The sequence is defined by the order of DistGrid dimensions and the order of tiles within the DistGrid or by user-supplied arbitrary sequence indices. See section 29.2.18 for details on the definition of *sequence indices*.

Source Field, destination Field, and the factor may be of different <type><kind>. Further, source and destination Fields may differ in shape, however, the number of elements must match.

The default redistribution operation, when `srcToDstTransposeMap` is not specified, corresponds to the identity mapping: each element of the sequentialized source Field is copied to the sequentialized destination Field element in order.

If the `srcToDstTransposeMap` argument is provided it must be identical across all PETs. The `srcToDstTransposeMap` allows source and destination Field dimensions to be transposed during the redistribution. To support this option, the number of source and destination Field dimensions must be equal and the size of the associated dimensions must match. See section 29.2.17 for more details about the use of the `srcToDstTransposeMap` argument.

It is erroneous to specify the identical Field object for `srcField` and `dstField` arguments.

The routine returns an `ESMF_RouteHandle` that can be used to call `ESMF_FieldRedist()` on any pair of Fields that matches `srcField` and `dstField` in *type*, *kind*, and memory layout of the *gridded* dimensions. However, the size, number, and index order of *ungridded* dimensions may be different. See section 38.2.5 for a more detailed discussion of RouteHandle reusability.

This call is *collective* across the current VM.

For examples and associated documentation regarding this method see Section 27.3.30.

The arguments are:

srcField `ESMF_Field` with source data.

dstField `ESMF_Field` with destination data. The data in this Field may be destroyed by this call.

routehandle Handle to the precomputed Route.

[srcToDstTransposeMap] A list with as many entries as there are dimensions in `srcField`, or `tileCount` times this many entries. Each entry maps the corresponding `srcField` dimension against the specified `dstField` dimension. Mixing distributed and undistributed dimensions is supported. Negative entries reverse the order of elements along the specified dimension when going from source to destination. When providing $rank \times tileCount$ elements in `srcToDstTransposeMap`, each block of size `rank` is associated with the corresponding tile (in order), and interpreted as the tile-specific transpose map.

[ignoreUnmatchedIndices] A logical flag that affects the behavior for when not all elements match between the `srcField` and `dstField` side. The default setting is `.false.`, indicating that it is an error when such a situation is encountered. Setting `ignoreUnmatchedIndices` to `.true.` ignores unmatched indices.

[rc] Return code; equals `ESMF_SUCCESS` if there are no errors.

27.6.69 ESMF_FieldRegrid - Compute a regridding operation

INTERFACE:

```
   subroutine ESMF_FieldRegrid(srcField, dstField, routehandle, &
     zeroregion, termorderflag, checkflag, dynamicMask, rc)
```

ARGUMENTS:

```
       type(ESMF_Field),                intent(in),    optional :: srcField
       type(ESMF_Field),                intent(inout), optional :: dstField
       type(ESMF_RouteHandle),          intent(inout)           :: routehandle
 -- The following arguments require argument keyword syntax (e.g. rc=rc). --
       type(ESMF_Region_Flag),          intent(in),    optional :: zeroregion
       type(ESMF_TermOrder_Flag),       intent(in),    optional :: termorderflag
       logical,                         intent(in),    optional :: checkflag
       type(ESMF_DynamicMask), target,  intent(in),    optional :: dynamicMask
       integer,                         intent(out),   optional :: rc
```

STATUS:

- This interface is backward compatible with ESMF versions starting at 5.2.0r. If code using this interface compiles with any version of ESMF starting with 5.2.0r, then it will compile with the current version.
- This interface was modified since ESMF version 5.2.0r. The fact that code using this interface compiles with the current ESMF version does not guarantee that it compiles with previous versions of this interface. If user code compatibility with version 5.2.0r is desired then care must be taken to limit the use of this interface to features that were available in the 5.2.0r release.
  Changes made after the 5.2.0r release:

6.1.0 Added argument `termorderflag`. The new argument gives the user control over the order in which the src terms are summed up.

7.1.0r Added argument `dynamicMask`. The new argument supports the dynamic masking feature.

DESCRIPTION:

Execute the precomputed regrid operation stored in `routehandle` to interpolate from `srcField` to `dstField`. See `ESMF_FieldRegridStore()` on how to precompute the `routehandle`.

Both `srcField` and `dstField` must match the respective Fields used during `ESMF_FieldRegridStore()` in *type*, *kind*, and memory layout of the *gridded* dimensions. However, the size, number, and index order of *ungridded* dimensions may be different. See section 38.2.5 for a more detailed discussion of RouteHandle reusability.

The `srcField` and `dstField` arguments are optional in support of the situation where `srcField` and/or `dstField` are not defined on all PETs. The `srcField` and `dstField` must be specified on those PETs that hold source or destination DEs, respectively, but may be omitted on all other PETs. PETs that hold neither source nor destination DEs may omit both arguments.

It is erroneous to specify the identical Field object for `srcField` and `dstField` arguments.

This call is *collective* across the current VM.

[srcField] `ESMF_Field` with source data.

[dstField] `ESMF_Field` with destination data.

routehandle Handle to the precomputed Route.

[zeroregion] If set to `ESMF_REGION_TOTAL` *(default)* the total regions of all DEs in `dstField` will be initialized to zero before updating the elements with the results of the sparse matrix multiplication. If set to `ESMF_REGION_EMPTY` the elements in `dstField` will not be modified prior to the sparse matrix multiplication and results will be added to the incoming element values. Setting `zeroregion` to `ESMF_REGION_SELECT` will only zero out those elements in the destination Array that will be updated by the sparse matrix multiplication. See section 55.50 for a complete list of valid settings.

[termorderflag] Specifies the order of the source side terms in all of the destination sums. The `termorderflag` only affects the order of terms during the execution of the RouteHandle. See the 38.2.1 section for an in-depth discussion of *all* bit-for-bit reproducibility aspects related to route-based communication methods. See 55.60 for a full list of options. The default setting depends on whether the `dynamicMask` argument is present or not. With `dynamicMask` argument present, the default of `termorderflag` is `ESMF_TERMORDER_SRCSEQ`. This ensures that `all` source terms are present on the destination side, and the interpolation can be calculated as a single sum. When `dynamicMask` is absent, the default of `termorderflag` is `ESMF_TERMORDER_FREE`, allowing maximum flexibility and partial sums for optimum performance.

[checkflag] If set to `.TRUE.` the input Array pair will be checked for consistency with the precomputed operation provided by `routehandle`. If set to `.FALSE.` *(default)* only a very basic input check will be performed, leaving many inconsistencies undetected. Set `checkflag` to `.FALSE.` to achieve highest performance.

[dynamicMask] Object holding dynamic masking information. See section 38.2.6 for a discussion of dynamic masking.

[rc] Return code; equals `ESMF_SUCCESS` if there are no errors.

27.6.70 ESMF_FieldRegridRelease - Free resources used by a regridding operation

INTERFACE:

```
subroutine ESMF_FieldRegridRelease(routehandle, &
  noGarbage, rc)
```

ARGUMENTS:

```
    type(ESMF_RouteHandle), intent(inout)         :: routehandle
-- The following arguments require argument keyword syntax (e.g. rc=rc). --
    logical,                intent(in),  optional :: noGarbage
    integer,                intent(out), optional :: rc
```

STATUS:

- This interface is backward compatible with ESMF versions starting at 5.2.0r. If code using this interface compiles with any version of ESMF starting with 5.2.0r, then it will compile with the current version.
- This interface was modified since ESMF version 5.2.0r. The fact that code using this interface compiles with the current ESMF version does not guarantee that it compiles with previous versions of this interface. If user code compatibility with version 5.2.0r is desired then care must be taken to limit the use of this interface to features that were available in the 5.2.0r release.
  Changes made after the 5.2.0r release:

  8.0.0 Added argument `noGarbage`. The argument provides a mechanism to override the default garbage collection mechanism when destroying an ESMF object.

DESCRIPTION:

Release resources associated with a regrid operation. After this call `routehandle` becomes invalid.

The arguments are:

routehandle Handle to the precomputed Route.

[noGarbage] If set to `.TRUE.` the object will be fully destroyed and removed from the ESMF garbage collection system. Note however that under this condition ESMF cannot protect against accessing the destroyed object through dangling aliases – a situation which may lead to hard to debug application crashes.

It is generally recommended to leave the `noGarbage` argument set to `.FALSE.` (the default), and to take advantage of the ESMF garbage collection system which will prevent problems with dangling aliases or incorrect sequences of destroy calls. However this level of support requires that a small remnant of the object is kept in memory past the destroy call. This can lead to an unexpected increase in memory consumption over the course of execution in applications that use temporary ESMF objects. For situations where the repeated creation and destruction of temporary objects leads to memory issues, it is recommended to call with `noGarbage` set to `.TRUE.`, fully removing the entire temporary object from memory.

[rc] Return code; equals `ESMF_SUCCESS` if there are no errors.

27.6.71 ESMF_FieldRegridStore - Precompute a Field regridding operation and return a RouteHandle and weights

INTERFACE:

```
!   Private name; call using ESMF_FieldRegridStore()
    subroutine ESMF_FieldRegridStoreNX(srcField, dstField, &
                  srcMaskValues, dstMaskValues, &
                  regridmethod, &
                  polemethod, regridPoleNPnts, &
                  lineType, &
                  normType, &
                  vectorRegrid, &
                  extrapMethod, &
                  extrapNumSrcPnts, &
                  extrapDistExponent, &
                  extrapNumLevels, &
                  unmappedaction, ignoreDegenerate, &
                  srcTermProcessing, &
                  pipeLineDepth, &
                  routehandle, &
                  factorList, factorIndexList, &
                  weights, indices, &  ! DEPRECATED ARGUMENTS
                  transposeRoutehandle, &
                  srcFracField, dstFracField, &
                  dstStatusField, &
                  unmappedDstList, &
                  checkFlag, &
                  rc)
```

ARGUMENTS:

```
      type(ESMF_Field),               intent(in)              :: srcField
      type(ESMF_Field),               intent(inout)           :: dstField
 -- The following arguments require argument keyword syntax (e.g. rc=rc). --
      integer(ESMF_KIND_I4),          intent(in),    optional :: srcMaskValues(:)
      integer(ESMF_KIND_I4),          intent(in),    optional :: dstMaskValues(:)
      type(ESMF_RegridMethod_Flag),   intent(in),    optional :: regridmethod
      type(ESMF_PoleMethod_Flag),     intent(in),    optional :: polemethod
      integer,                        intent(in),    optional :: regridPoleNPnts
      type(ESMF_LineType_Flag),       intent(in),    optional :: lineType
      type(ESMF_NormType_Flag),       intent(in),    optional :: normType
      logical,                        intent(in),    optional :: vectorRegrid
      type(ESMF_ExtrapMethod_Flag),   intent(in),    optional :: extrapMethod
      integer,                        intent(in),    optional :: extrapNumSrcPnts
      real(ESMF_KIND_R4),             intent(in),    optional :: extrapDistExponent
      integer,                        intent(in),    optional :: extrapNumLevels
      type(ESMF_UnmappedAction_Flag), intent(in),    optional :: unmappedaction
      logical,                        intent(in),    optional :: ignoreDegenerate
      integer,                        intent(inout), optional :: srcTermProcessing
      integer,                        intent(inout), optional :: pipeLineDepth
      type(ESMF_RouteHandle),         intent(inout), optional :: routehandle
      real(ESMF_KIND_R8),             pointer,       optional :: factorList(:)
```

```
integer(ESMF_KIND_I4),          pointer,       optional :: factorIndexList(:,:)
real(ESMF_KIND_R8),    pointer, optional :: weights(:)   ! DEPRECATED ARG
integer(ESMF_KIND_I4), pointer, optional :: indices(:,:) ! DEPRECATED ARG
type(ESMF_RouteHandle),         intent(inout), optional :: transposeRoutehandle
type(ESMF_Field),               intent(inout), optional :: srcFracField
type(ESMF_Field),               intent(inout), optional :: dstFracField
type(ESMF_Field),               intent(inout), optional :: dstStatusField
integer(ESMF_KIND_I4),          pointer,       optional :: unmappedDstList(:)
logical,                        intent(in),    optional :: checkFlag
integer,                        intent(out),   optional :: rc
```

STATUS:

- This interface is backward compatible with ESMF versions starting at 5.2.0r. If code using this interface compiles with any version of ESMF starting with 5.2.0r, then it will compile with the current version.
- This interface was modified since ESMF version 5.2.0r. The fact that code using this interface compiles with the current ESMF version does not guarantee that it compiles with previous versions of this interface. If user code compatibility with version 5.2.0r is desired then care must be taken to limit the use of this interface to features that were available in the 5.2.0r release.
  Changes made after the 5.2.0r release:

  5.2.0rp1 Added arguments `factorList` and `factorIndexList`. Started to deprecate arguments `weights` and `indices`. This corrects an inconsistency of this interface with all other ESMF methods that take these same arguments.

  6.1.0 Added arguments `ignoreDegenerate`, `srcTermProcessing`, `pipelineDepth`, and `unmappedDstList`. The argument `ignoreDegenerate` allows the user to skip degenerate cells in the regridding instead of stopping with an error. The two arguments `srcTermProcessing` and `pipelineDepth` provide access to the tuning parameters affecting the sparse matrix execution. The argument `unmappedDstList` allows the user to get a list of the destination items which the regridding couldn't map to a source.

  6.3.0r Added argument `lineType`. This argument allows the user to control the path of the line between two points on a sphere surface. This allows the user to use their preferred line path for the calculation of distances and the shape of cells during regrid weight calculation on a sphere.

  6.3.0rp1 Added argument `normType`. This argument allows the user to control the type of normalization done during conservative weight generation.

  7.1.0r Added argument `dstStatusField`. This argument allows the user to receive information about what happened to each location in the destination Field during regridding.

  Added arguments `extrapMethod`, `extrapNumSrcPnts`, and `extrapDistExponent`. These three new extrapolation arguments allow the user to extrapolate destination points not mapped by the regrid method. `extrapMethod` allows the user to choose the extrapolation method. `extrapNumSrcPnts` and `extrapDistExponent` are parameters that allow the user to tune the behavior of the `ESMF_EXTRAPMETHOD_NEAREST_IDAVG` method.

  8.0.0 Added argument `extrapNumLevels`. For level based extrapolation methods (e.g. `ESMF_EXTRAPMETHOD_CREEP`) this argument allows the user to set how many levels to extrapolate.

  8.1.0 Added argument `checkFlag` to enable the user to turn on more expensive error checking during regrid weight calculation.

  8.6.0 Added argument `vectorRegrid` to enable the user to turn on vector regridding. This functionality treats an undistributed dimension of the input Fields as the components of a vector and maps it through 3D Cartesian space to give more consistent results (especially near the pole) than just regridding the components individually.

8.8.0 Added argument `transposeRoutehandle` to enable the user to retrieve a routeHandle containing the transpose of the regrid sparse matrix.

DESCRIPTION:

Creates a sparse matrix operation (stored in `routehandle`) that contains the calculations and communications necessary to interpolate from `srcField` to `dstField`. The routehandle can then be used in the call `ESMF_FieldRegrid()` to interpolate between the Fields. The user may also get the interpolation matrix in sparse matrix form via the optional arguments `factorList` and `factorIndexList`.

The routehandle generated by this call is based just on the coordinates in the spatial class (e.g. Grid) contained in the Fields. If those coordinates don't change the routehandle can be used repeatedly to interpolate from the source Field to the destination Field. This is true even if the data in the Fields changes. The routehandle may also be used to interpolate between any source and destination Field which are created on the same location in the same Grid, LocStream, XGrid, or Mesh as the original Fields.

When it's no longer needed the routehandle should be destroyed by using `ESMF_FieldRegridRelease()` to free the memory it's using.

Note, as a side effect, that this call may change the data in `dstField`. If this is undesirable, then an easy work around is to create a second temporary field with the same structure as `dstField` and pass that in instead.

The arguments are:

srcField Source Field.

dstField Destination Field. The data in this Field may be overwritten by this call.

[srcMaskValues] Mask information can be set in the Grid (see 32.3.17) or Mesh (see 34.3.11) upon which the `srcField` is built. The `srcMaskValues` argument specifies the values in that mask information which indicate a source point should be masked out. In other words, a locati on is masked if and only if the value for that location in the mask information matches one of the values listed in `srcMaskValues`. If `srcMaskValues` is not specified, no masking will occur.

[dstMaskValues] Mask information can be set in the Grid (see 32.3.17) or Mesh (see 34.3.11) upon which the `dstField` is built. The `dstMaskValues` argument specifies the values in that mask information which indicate a destination point should be masked out. In other words, a location is masked if and only if the value for that location in the mask information matches one of the values listed in `dstMaskValues`. If `dstMaskValues` is not specified, no masking will occur.

[regridmethod] The type of interpolation. Please see Section 55.51 for a list of valid options. If not specified, defaults to `ESMF_REGRIDMETHOD_BILINEAR`.

[polemethod] Specifies the type of pole to construct on the source Grid during regridding. Please see Section 55.48 for a list of valid options. If not specified, defaults to `ESMF_POLEMETHOD_ALLAVG` for non-conservative regrid methods, and `ESMF_POLEMETHOD_NONE` for conservative methods.

[regridPoleNPnts] If `polemethod` is `ESMF_POLEMETHOD_NPNTAVG`, then this parameter indicates the number of points over which to average. If `polemethod` is not ESMF_POLEMETHOD_NPNTAVG and `regridPoleNPnts` is specified, then it will be ignored. This subroutine will return an error if `polemethod` is ESMF_POLEMETHOD_NPNTAVG and `regridPoleNPnts` is not specified.

[lineType] This argument controls the path of the line which connects two points on a sphere surface. This in turn controls the path along which distances are calculated and the shape of the edges that make up a cell. Both of these quantities can influence how interpolation weights are calculated. As would be expected, this argument is only applicable when `srcField` and `dstField` are built on grids which lie on the surface of a sphere. Section 55.36 shows a list of valid options for this argument. Figure 25.2.16 shows which line types are supported for each regrid method as well as showing the default line type by regrid method. If not specified, defaults

to ESMF_LINETYPE_CART for non-conservative regrid methods, and ESMF_LINETYPE_GREAT_CIRCLE for conservative methods.

[normType] This argument controls the type of normalization used when generating conservative weights. This option only applies to weights generated with regridmethod=ESMF_REGRIDMETHOD_CONSERVE or regridmethod=ESMF_REGRIDMETHOD_CONSERVE_2ND Please see Section 55.45 for a list of valid options. If not specified normType defaults to ESMF_NORMTYPE_DSTAREA.

[vectorRegrid] If true, treat a single ungridded dimension in the source and destination Fields as the components of a vector. If true and there is more than one ungridded dimension in either the source or destination, then an error will be returned. Currently, only undistributed (vector) dimensions of size 2 are supported. In the vector dimension, the first entry is interpreted as the east component and the second as the north component. In addition, this functionality presently only works when both the source and destination Fields are build on a geometry (e.g. an ESMF Grid) with a spherical coordinate system (e.g. ESMF_COORDSYS_SPH_DEG). Also, this functionality is not currently supported with conservative regrid methods (e.g. regridmethod=ESMF_REGRIDMETHOD_CONSERVE). We expect these restrictions to be loosened over time as new requirements come in from users. See section 25.2.17 for further information on this functionality. If not specified, this argument defaults to false.

[extrapMethod] The type of extrapolation. Please see Section 55.18 for a list of valid options. If not specified, defaults to ESMF_EXTRAPMETHOD_NONE.

[extrapNumSrcPnts] The number of source points to use for the extrapolation methods that use more than one source point (e.g. ESMF_EXTRAPMETHOD_NEAREST_IDAVG). If not specified, defaults to 8.

[extrapDistExponent] The exponent to raise the distance to when calculating weights for the ESMF_EXTRAPMETHOD_NEAREST_IDAVG extrapolation method. A higher value reduces the influence of more distant points. If not specified, defaults to 2.0.

[extrapNumLevels] The number of levels to output for the extrapolation methods that fill levels (e.g. ESMF_EXTRAPMETHOD_CREEP). When a method is used that requires this, then an error will be returned, if it is not specified.

[unmappedaction] Specifies what should happen if there are destination points that can't be mapped to a source cell. Please see Section 55.62 for a list of valid options. If not specified, unmappedaction defaults to ESMF_UNMAPPEDACTION_ERROR.

[ignoreDegenerate] Ignore degenerate cells when checking for errors. If this is set to true, then the regridding proceeds, but degenerate cells will be skipped. If set to false, a degenerate cell produces an error. If not specified, ignoreDegenerate defaults to false.

[srcTermProcessing] The srcTermProcessing parameter controls how many source terms, located on the same PET and summing into the same destination element, are summed into partial sums on the source PET before being transferred to the destination PET. A value of 0 indicates that the entire arithmetic is done on the destination PET; source elements are neither multiplied by their factors nor added into partial sums before being sent off by the source PET. A value of 1 indicates that source elements are multiplied by their factors on the source side before being sent to the destination PET. Larger values of srcTermProcessing indicate the maximum number of terms in the partial sums on the source side.

Note that partial sums may lead to bit-for-bit differences in the results. See section 38.2.1 for an in-depth discussion of *all* bit-for-bit reproducibility aspects related to route-based communication methods.

The ESMF_FieldRegridStore() method implements an auto-tuning scheme for the srcTermProcessing parameter. The intent on the srcTermProcessing argument is "inout" in order to support both overriding and accessing the auto-tuning parameter. If an argument $>= 0$ is specified, it is used for the srcTermProcessing parameter, and the auto-tuning phase is skipped. In this case the srcTermProcessing argument is not modified on return. If the provided argument is < 0, the srcTermProcessing parameter is determined internally using the auto-tuning scheme. In this case the srcTermProcessing argument is re-set to the internally determined value on return. Auto-tuning is also used if the optional srcTermProcessing argument is omitted.

[pipelineDepth] The `pipelineDepth` parameter controls how many messages a PET may have outstanding during a sparse matrix exchange. Larger values of `pipelineDepth` typically lead to better performance. However, on some systems too large a value may lead to performance degradation, or runtime errors.

Note that the pipeline depth has no effect on the bit-for-bit reproducibility of the results. However, it may affect the performance reproducibility of the exchange.

The `ESMF_FieldRegridStore()` method implements an auto-tuning scheme for the `pipelineDepth` parameter. The intent on the `pipelineDepth` argument is "`inout`" in order to support both overriding and accessing the auto-tuning parameter. If an argument $>= 0$ is specified, it is used for the `pipelineDepth` parameter, and the auto-tuning phase is skipped. In this case the `pipelineDepth` argument is not modified on return. If the provided argument is < 0, the `pipelineDepth` parameter is determined internally using the auto-tuning scheme. In this case the `pipelineDepth` argument is re-set to the internally determined value on return. Auto-tuning is also used if the optional `pipelineDepth` argument is omitted.

[routehandle] The communication handle that implements the regrid operation and that can be used later in the `ESMF_FieldRegrid()` call. The `routehandle` is optional so that if the user doesn't need it, then they can indicate that by not requesting it. The time to compute the `routehandle` can be a significant fraction of the time taken by this method, so if it's not needed then not requesting it is worthwhile.

[factorList] The list of coefficients for a sparse matrix which interpolates from `srcField` to `dstField`. The array coming out of this variable is in the appropriate format to be used in other ESMF sparse matrix multiply calls, for example `ESMF_FieldSMMStore()`. The `factorList` array is allocated by the method and the user is responsible for deallocating it.

[factorIndexList] The indices for a sparse matrix which interpolates from `srcField` to `dstField`. This argument is a 2D array containing pairs of source and destination sequence indices corresponding to the coefficients in the `factorList` argument. The first dimension of `factorIndexList` is of size 2. `factorIndexList(1,:)` specifies the sequence index of the source element in the `srcField`. `factorIndexList(2,:)` specifies the sequence index of the destination element in the `dstField`. The se cond dimension of `factorIndexList` steps through the list of pairs, i.e. `size(factorIndexList,2)==size(factorList)`. The array coming out of this variable is in the appropriate format to be used in other ESMF sparse matrix multiply calls, for example `ESMF_FieldSMMStore()`. The `factorIndexList` array is allocated by the method and the user is responsible for deallocating it.

[weights] **DEPRECATED ARGUMENT!** Please use the argument `factorList` instead.

[indices] **DEPRECATED ARGUMENT!** Please use the argument `factorIndexList` instead.

transposeRoutehandle A routeHandle for the transpose of the regrid sparse matrix. The transposed operation goes from `dstField` to `srcField`.

[srcFracField] The fraction of each source cell participating in the regridding. Only valid when regridmethod is `ESMF_REGRIDMETHOD_CONSERVE` or `regridmethod=ESMF_REGRIDMETHOD_CONSERVE_2ND`. This Field needs to be created on the same location (e.g staggerloc) as the srcField.

[dstFracField] The fraction of each destination cell participating in the regridding. Only valid when regridmethod is `ESMF_REGRIDMETHOD_CONSERVE` or `regridmethod=ESMF_REGRIDMETHOD_CONSERVE_2ND`. This Field needs to be created on the same location (e.g staggerloc) as the dstField. It is important to note that the current implementation of conservative regridding doesn't normalize the interpolation weights by the destination fraction. This means that for a destination grid which only partially overlaps the source grid the destination field which is output from the regrid operation should be divided by the corresponding destination fraction to yield the true interpolated values for cells which are only partially covered by the source grid.

[dstStatusField] An ESMF Field which outputs a regrid status value for each destination location. Section 55.52 indicates the meaning of each value. The Field needs to be built on the same location (e.g. staggerloc) in the same Grid, Mesh, XGrid, or LocStream as the `dstField` argument. The Field also needs to be of typekind `ESMF_TYPEKIND_I4`. This option currently doesn't work with the `ESMF_REGRIDMETHOD_NEAREST_DTOS` regrid method.

[unmappedDstList] The list of the sequence indices for locations in `dstField` which couldn't be mapped the `srcField`. The list on each PET only contains the unmapped locations for the piece of the `dstField` on that PET. If a destination point is masked, it won't be put in this list. This option currently doesn't work with the `ESMF_REGRIDMETHOD_NEAREST_DTOS` regrid method.

[checkFlag] If set to `.FALSE.` *(default)* only quick error checking will be performed. If set to `.TRUE.` more expensive error checking will be performed, possibly catching more errors. Set `checkFlag` to `.FALSE.` to achieve highest performance. The checkFlag currently only turns on checking for conservative regrid methods (e.g. `ESMF_REGRIDMETHOD_CONSERVE`).

[rc] Return code; equals `ESMF_SUCCESS` if there are no errors.

27.6.72 ESMF_FieldRegridStore - Precompute a Field regridding operation between an XGrid and one of its side Grids or Meshes

INTERFACE:

```
!   Private name; call using ESMF_FieldRegridStore()
  subroutine ESMF_FieldRegridStoreX(xgrid, srcField, dstField, &
                  regridmethod, &
                  srcTermProcessing, pipeLineDepth, &
                  routehandle, &
                  factorList, factorIndexList, &
                  srcFracField, dstFracField, &
                  srcMergeFracField, dstMergeFracField, rc)
```

ARGUMENTS:

```
      type(ESMF_XGrid),       intent(in)                      :: xgrid
      type(ESMF_Field),       intent(in)                      :: srcField
      type(ESMF_Field),       intent(inout)                   :: dstField
-- The following arguments require argument keyword syntax (e.g. rc=rc). --
      type(ESMF_RegridMethod_Flag),   intent(in),    optional :: regridmethod
      integer,                        intent(inout), optional :: srcTermProcessing
      integer,                        intent(inout), optional :: pipeLineDepth
      type(ESMF_RouteHandle), intent(inout), optional         :: routehandle
      real(ESMF_KIND_R8),             pointer,       optional :: factorList(:)
      integer(ESMF_KIND_I4),          pointer,       optional :: factorIndexList(:,:)
      type(ESMF_Field),       intent(inout), optional         :: srcFracField
      type(ESMF_Field),       intent(inout), optional         :: dstFracField
      type(ESMF_Field),       intent(inout), optional         :: srcMergeFracField
      type(ESMF_Field),       intent(inout), optional         :: dstMergeFracField
      integer,                intent(out),   optional         :: rc
```

STATUS:

- This interface is backward compatible with ESMF versions starting at 5.2.0r. If code using this interface compiles with any version of ESMF starting with 5.2.0r, then it will compile with the current version.

- This interface was modified since ESMF version 5.2.0r. The fact that code using this interface compiles with the current ESMF version does not guarantee that it compiles with previous versions of this interface. If user code compatibility with version 5.2.0r is desired then care must be taken to limit the use of this interface to features that were available in the 5.2.0r release.
  Changes made after the 5.2.0r release:

  5.3.0 Added arguments `srcFracField`, `dstFracField`, `srcMergeFracField`, and `dstMergeFracField`. These fraction Fields allow a user to calculate correct flux regridded through `ESMF_XGrid`.

  7.1.0r Added argument `regridmethod`. This new argument allows the user to choose the regrid method to apply when computing the routehandle.

  8.5.0 Added arguments `srcTermProcessing` and `pipelineDepth` to provide access to the tuning parameters affecting the sparse matrix execution. See the text for details on the impact `srcTermProcessing` can have on bit-for-bit reproducibility.

  8.9.0 Added arguments `factorList` and `factorIndexList` to allow user to retrieve regridding weights.

DESCRIPTION:

This method creates a RouteHandle to do conservative interpolation specifically between a Field built on an XGrid and a Field build on one of the Grids or Meshes used to create that XGrid. (To do more general interpolation use the `ESMF_FieldRegridStore()` method in section 27.6.71.) The RouteHandle produced by this method can then be used in the call `ESMF_FieldRegrid()` to interpolate from the `srcField` to the `dstField`.

The RouteHandle generated by this call is based just on the coordinates in the Grids, XGrids, or Meshes contained in the Fields. If those coordinates don't change the RouteHandle can be used repeatedly to interpolate from the source Field to the destination Field. This is true even if the data in the Fields changes. The RouteHandle may also be used to interpolate between any source and destination Field which are created on the same Grid, XGrid, or Mesh as the original Fields.

When it's no longer needed the RouteHandle should be destroyed by using `ESMF_FieldRegridRelease()` to free the memory it's using.

Note, as a side effect, that this call may change the data in `dstField`. If this is undesirable, then an easy work around is to create a second temporary Field with the same structure as `dstField` and pass that in instead.

The arguments are:

xgrid Exchange Grid.

srcField Source Field built on either `xgrid` or one of the Grids or Meshes used to create `xgrid`.

dstField Destination Field built on either `xgrid` or one of the Grids or Meshes used to create `xgrid`. The data in this Field may be overwritten by this call.

[regridmethod] The type of interpolation. For this method only `ESMF_REGRIDMETHOD_CONSERVE` and `ESMF_REGRIDMETHOD_CONSERVE_2ND` are supported. If not specified, defaults to `ESMF_REGRIDMETHOD_CONSERVE`.

[srcTermProcessing] The `srcTermProcessing` parameter controls how many source terms, located on the same PET and summing into the same destination element, are summed into partial sums on the source PET before being transferred to the destination PET. A value of 0 indicates that the entire arithmetic is done on the destination PET; source elements are neither multiplied by their factors nor added into partial sums before being sent off by the source PET. A value of 1 indicates that source elements are multiplied by their factors on the source side before being sent to the destination PET. Larger values of `srcTermProcessing` indicate the maximum number of terms in the partial sums on the source side.

Note that partial sums may lead to bit-for-bit differences in the results. See section 38.2.1 for an in-depth discussion of *all* bit-for-bit reproducibility aspects related to route-based communication methods.

The `ESMF_FieldRegridStore()` method implements an auto-tuning scheme for the `srcTermProcessing` parameter. The intent on the `srcTermProcessing` argument is "`inout`" in order to support both overriding and accessing the auto-tuning parameter. If an argument $>= 0$ is specified, it is used for the `srcTermProcessing` parameter, and the auto-tuning phase is skipped. In this case the `srcTermProcessing` argument is not modified on return. If the provided argument is < 0, the `srcTermProcessing` parameter is determined internally using the auto-tuning scheme. In this case the `srcTermProcessing` argument is re-set to the internally determined value on return. Auto-tuning is also used if the optional `srcTermProcessing` argument is omitted.

[pipelineDepth] The `pipelineDepth` parameter controls how many messages a PET may have outstanding during a sparse matrix exchange. Larger values of `pipelineDepth` typically lead to better performance. However, on some systems too large a value may lead to performance degradation, or runtime errors.

Note that the pipeline depth has no effect on the bit-for-bit reproducibility of the results. However, it may affect the performance reproducibility of the exchange.

The `ESMF_FieldRegridStore()` method implements an auto-tuning scheme for the `pipelineDepth` parameter. The intent on the `pipelineDepth` argument is "`inout`" in order to support both overriding and accessing the auto-tuning parameter. If an argument $>= 0$ is specified, it is used for the `pipelineDepth` parameter, and the auto-tuning phase is skipped. In this case the `pipelineDepth` argument is not modified on return. If the provided argument is < 0, the `pipelineDepth` parameter is determined internally using the auto-tuning scheme. In this case the `pipelineDepth` argument is re-set to the internally determined value on return. Auto-tuning is also used if the optional `pipelineDepth` argument is omitted.

[routehandle] The handle that implements the regrid and that can be used in later `ESMF_FieldRegrid`.

[srcFracField] The fraction of each source cell participating in the regridding returned from this call. This Field needs to be created on the same Grid and location (e.g staggerloc) as the srcField.

[dstFracField] The fraction of each destination cell participating in the regridding returned from this call. This Field needs to be created on the same Grid and location (e.g staggerloc) as the dstField.

[srcMergeFracField] The fraction of each source cell as a result of Grid merge returned from this call. This Field needs to be created on the same Grid and location (e.g staggerloc) as the srcField.

[dstMergeFracField] The fraction of each destination cell as a result of Grid merge returned from this call. This Field needs to be created on the same Grid and location (e.g staggerloc) as the dstField.

[rc] Return code; equals `ESMF_SUCCESS` if there are no errors.

27.6.73 ESMF_FieldRegridGetArea - Get the area of the cells used for conservative interpolation

INTERFACE:

```
subroutine ESMF_FieldRegridGetArea(areaField, rc)
```

RETURN VALUE:

ARGUMENTS:

```
type(ESMF_Field), intent(inout)                 :: areaField
integer, intent(out), optional                  :: rc
```

DESCRIPTION:

This subroutine gets the area of the cells used for conservative interpolation for the grid object associated with `areaField` and puts them into `areaField`. If created on a 2D Grid, it must be built on the `ESMF_STAGGERLOC_CENTER` stagger location. If created on a 3D Grid, it must be built on the `ESMF_STAGGERLOC_CENTER_VCENTER` stagger location. If created on a Mesh, it must be built on the `ESMF_MESHLOC_ELEMENT` mesh location.

If the user has set the area in the Grid, Mesh, or XGrid under `areaField`, then that's the area that's returned in the units that the user set it in. If the user hasn't set the area, then the area is calculated and returned. If the Grid, Mesh, or XGrid is on the surface of a sphere, then the calculated area is in units of square radians. If the Grid, Mesh, or XGrid is Cartesian, then the calculated area is in square units of whatever unit the coordinates are in.

The arguments are:

areaField The Field to put the area values in.

[rc] Return code; equals `ESMF_SUCCESS` if there are no errors.

27.6.74 ESMF_FieldScatter - Scatter a Fortran array across the ESMF_Field

INTERFACE:

```
subroutine ESMF_FieldScatter<rank><type><kind>(field, farray, &
rootPet, tile, vm, rc)
```

ARGUMENTS:

```
  type(ESMF_Field), intent(inout) :: field
  mtype (ESMF_KIND_mtypekind),intent(in), target :: farray(mdim)
  integer, intent(in) :: rootPet
-- The following arguments require argument keyword syntax (e.g. rc=rc). --
  integer, intent(in), optional :: tile
  type(ESMF_VM), intent(in), optional :: vm
  integer, intent(out), optional :: rc
```

STATUS:

- This interface is backward compatible with ESMF versions starting at 5.2.0r. If code using this interface compiles with any version of ESMF starting with 5.2.0r, then it will compile with the current version.

DESCRIPTION:

Scatter the data of `farray` located on `rootPET` across an ESMF_Field object. A single `farray` must be scattered across a single DistGrid tile in Field. The optional `tile` argument allows selection of the tile. For Fields defined on a single tile DistGrid the default selection (tile 1) will be correct. The shape of `farray` must match the shape of the tile in Field.

If the Field contains replicating DistGrid dimensions data will be scattered across all of the replicated pieces.

The implementation of Scatter and Gather is not sequence index based. If the Field is built on arbitrarily distributed Grid, Mesh, LocStream or XGrid, Scatter will not scatter data from rootPet to the destination data points corresponding to the sequence index on the rootPet. Instead Scatter will scatter a contiguous memory range from rootPet to destination PET. The size of the memory range is equal to the number of data elements on the destination PET. Vice versa for the Gather operation. In this case, the user should use `ESMF_FieldRedist` to achieve the same data operation result. For examples how to use `ESMF_FieldRedist` to perform Gather and Scatter, please refer to 27.3.32 and 27.3.31.

This version of the interface implements the PET-based blocking paradigm: Each PET of the VM must issue this call exactly once for *all* of its DEs. The call will block until all PET-local data objects are accessible.

For examples and associated documentation regarding this method see Section 27.3.29.

The arguments are:

field The `ESMF_Field` object across which data will be scattered.

{farray} The Fortran array that is to be scattered. Only root must provide a valid `farray`, the other PETs may treat `farray` as an optional argument.

rootPet PET that holds the valid data in `farray`.

[tile] The DistGrid tile in `field` into which to scatter `farray`. By default `farray` will be scattered into tile 1.

[vm] Optional `ESMF_VM` object of the current context. Providing the VM of the current context will lower the method's overhead.

[rc] Return code; equals `ESMF_SUCCESS` if there are no errors.

27.6.75 ESMF_FieldSet - Set object-wide Field information

INTERFACE:

```
subroutine ESMF_FieldSet(field, name, rc)
```

ARGUMENTS:

```
     type(ESMF_Field),   intent(inout)         :: field
 -- The following arguments require argument keyword syntax (e.g. rc=rc). --
     character(len = *), intent(in),  optional :: name
     integer,            intent(out), optional :: rc
```

DESCRIPTION:

Sets adjustable settings in an `ESMF_Field` object.

The arguments are:

field `ESMF_Field` object for which to set properties.

[name] The Field name.

[rc] Return code; equals `ESMF_SUCCESS` if there are no errors.

27.6.76 ESMF_FieldSync - Synchronize DEs across the Field in case of sharing

INTERFACE:

```
subroutine ESMF_FieldSync(field, rc)
```

ARGUMENTS:

```
     type(ESMF_Field), intent(in)            :: field
 -- The following arguments require argument keyword syntax (e.g. rc=rc). --
     integer,          intent(out), optional :: rc
```

DESCRIPTION:

Synchronizes access to DEs across `field` to make sure PETs correctly access the data for read and write when DEs are shared.

The arguments are:

field Specified `ESMF_Field` object.

[rc] Return code; equals `ESMF_SUCCESS` if there are no errors.

27.6.77 ESMF_FieldSMM - Execute a Field sparse matrix multiplication

INTERFACE:

```
subroutine ESMF_FieldSMM(srcField, dstField, routehandle, &
           zeroregion, termorderflag, checkflag, rc)
```

ARGUMENTS:

```
        type(ESMF_Field),          intent(in),    optional  :: srcField
        type(ESMF_Field),          intent(inout), optional  :: dstField
        type(ESMF_RouteHandle),    intent(inout)            :: routehandle
 -- The following arguments require argument keyword syntax (e.g. rc=rc). --
        type(ESMF_Region_Flag),    intent(in),    optional  :: zeroregion
        type(ESMF_TermOrder_Flag), intent(in),    optional  :: termorderflag
        logical,                   intent(in),    optional  :: checkflag
        integer,                   intent(out),   optional  :: rc
```

STATUS:

- This interface is backward compatible with ESMF versions starting at 5.2.0r. If code using this interface compiles with any version of ESMF starting with 5.2.0r, then it will compile with the current version.

  6.1.0 Added argument `termorderflag`. The new argument gives the user control over the order in which the src terms are summed up.

DESCRIPTION:

Execute a precomputed Field sparse matrix multiplication from `srcField` to `dstField`. Both `srcField` and `dstField` must match the respective Fields used during `ESMF_FieldSMMStore()` in *type*, *kind*, and memory layout of the *gridded* dimensions. However, the size, number, and index order of *ungridded* dimensions may be different. See section 38.2.5 for a more detailed discussion of RouteHandle reusability.

The `srcField` and `dstField` arguments are optional in support of the situation where `srcField` and/or `dstField` are not defined on all PETs. The `srcField` and `dstField` must be specified on those PETs that hold source or destination DEs, respectively, but may be omitted on all other PETs. PETs that hold neither source nor destination DEs may omit both arguments.

It is erroneous to specify the identical Field object for `srcField` and `dstField` arguments.

See `ESMF_FieldSMMStore()` on how to precompute `routehandle`.

This call is *collective* across the current VM.

For examples and associated documentation regarding this method see Section 27.3.33.

[srcField] `ESMF_Field` with source data.

[dstField] `ESMF_Field` with destination data.

routehandle Handle to the precomputed Route.

[zeroregion] If set to `ESMF_REGION_TOTAL` *(default)* the total regions of all DEs in `dstField` will be initialized to zero before updating the elements with the results of the sparse matrix multiplication. If set to `ESMF_REGION_EMPTY` the elements in `dstField` will not be modified prior to the sparse matrix multiplication and results will be added to the incoming element values. Setting `zeroregion` to `ESMF_REGION_SELECT` will only zero out those elements in the destination Field that will be updated by the sparse matrix multiplication. See section 55.50 for a complete list of valid settings.

[termorderflag] Specifies the order of the source side terms in all of the destination sums. The `termorderflag` only affects the order of terms during the execution of the RouteHandle. See the 38.2.1 section for an in-depth discussion of *all* bit-for-bit reproducibility aspects related to route-based communication methods. See 55.60 for a full list of options. The default is `ESMF_TERMORDER_FREE`, allowing maximum flexibility in the order of terms for optimum performance.

[checkflag] If set to `.TRUE.` the input Field pair will be checked for consistency with the precomputed operation provided by `routehandle`. If set to `.FALSE.` *(default)* only a very basic input check will be performed, leaving many inconsistencies undetected. Set `checkflag` to `.FALSE.` to achieve highest performance.

[rc] Return code; equals `ESMF_SUCCESS` if there are no errors.

27.6.78 ESMF_FieldSMMRelease - Release resources associated with Field

sparse matrix multiplication

INTERFACE:

```
subroutine ESMF_FieldSMMRelease(routehandle, noGarbage, rc)
```

ARGUMENTS:

```
        type(ESMF_RouteHandle), intent(inout)           :: routehandle
-- The following arguments require argument keyword syntax (e.g. rc=rc). --
        logical,                intent(in),   optional  :: noGarbage
        integer,                intent(out),  optional  :: rc
```

STATUS:

- This interface is backward compatible with ESMF versions starting at 5.2.0r. If code using this interface compiles with any version of ESMF starting with 5.2.0r, then it will compile with the current version.
- This interface was modified since ESMF version 5.2.0r. The fact that code using this interface compiles with the current ESMF version does not guarantee that it compiles with previous versions of this interface. If user code compatibility with version 5.2.0r is desired then care must be taken to limit the use of this interface to features that were available in the 5.2.0r release.
  Changes made after the 5.2.0r release:

  8.0.0 Added argument `noGarbage`. The argument provides a mechanism to override the default garbage collection mechanism when destroying an ESMF object.

DESCRIPTION:

Release resources associated with a Field sparse matrix multiplication. After this call `routehandle` becomes invalid.

routehandle Handle to the precomputed Route.

[noGarbage] If set to `.TRUE.` the object will be fully destroyed and removed from the ESMF garbage collection system. Note however that under this condition ESMF cannot protect against accessing the destroyed object through dangling aliases – a situation which may lead to hard to debug application crashes.

It is generally recommended to leave the `noGarbage` argument set to `.FALSE.` (the default), and to take advantage of the ESMF garbage collection system which will prevent problems with dangling aliases or incorrect sequences of destroy calls. However this level of support requires that a small remnant of the object is kept in memory past the destroy call. This can lead to an unexpected increase in memory consumption over the course of execution in applications that use temporary ESMF objects. For situations where the repeated creation and destruction of temporary objects leads to memory issues, it is recommended to call with `noGarbage` set to `.TRUE.`, fully removing the entire temporary object from memory.

[rc] Return code; equals `ESMF_SUCCESS` if there are no errors.

27.6.79 ESMF_FieldSMMStore - Precompute Field sparse matrix multiplication with local factors

INTERFACE:

```
! Private name; call using ESMF_FieldSMMStore()
subroutine ESMF_FieldSMMStore<type><kind>(srcField, dstField, &
       routehandle, factorList, factorIndexList, &
       ignoreUnmatchedIndices, srcTermProcessing, pipelineDepth, rc)
```

ARGUMENTS:

```
     type(ESMF_Field),         intent(in)              :: srcField
     type(ESMF_Field),         intent(inout)           :: dstField
     type(ESMF_RouteHandle),   intent(inout)           :: routehandle
     <type>(ESMF_KIND_<kind>), intent(in)              :: factorList(:)
     integer,                  intent(in),             :: factorIndexList(:,:)
 -- The following arguments require argument keyword syntax (e.g. rc=rc). --
     logical,                  intent(in),    optional :: ignoreUnmatchedIndices
     integer,                  intent(inout), optional :: srcTermProcessing
     integer,                  intent(inout), optional :: pipeLineDepth
     integer,                  intent(out),   optional :: rc
```

STATUS:

- This interface is backward compatible with ESMF versions starting at 5.2.0r. If code using this interface compiles with any version of ESMF starting with 5.2.0r, then it will compile with the current version.
- This interface was modified since ESMF version 5.2.0r. The fact that code using this interface compiles with the current ESMF version does not guarantee that it compiles with previous versions of this interface. If user code compatibility with version 5.2.0r is desired then care must be taken to limit the use of this interface to features that were available in the 5.2.0r release.
  Changes made after the 5.2.0r release:

  6.1.0 Added arguments `srcTermProcessing`, `pipelineDepth` The two arguments `srcTermProcessing` and `pipelineDepth` provide access to the tuning parameters affecting the sparse matrix execution.

  7.0.0 Added argument `transposeRoutehandle` to allow a handle to the transposed matrix operation to be returned.
  Added argument `ignoreUnmatchedIndices` to support sparse matrices that contain elements with indices that do not have a match within the source or destination Array.

  7.1.0r Removed argument `transposeRoutehandle` and provide it via interface overloading instead. This allows argument `srcField` to stay strictly intent(in) for this entry point.

DESCRIPTION:

Store a Field sparse matrix multiplication operation from `srcField` to `dstField`. PETs that specify non-zero matrix coefficients must use the <type><kind> overloaded interface and provide the `factorList` and `factorIndexList` arguments. Providing `factorList` and `factorIndexList` arguments with `size(factorList) = (/0/)` and `size(factorIndexList) = (/2,0/)` or `(/4,0/)` indicates that a

PET does not provide matrix elements. Alternatively, PETs that do not provide matrix elements may also call into the overloaded interface *without* `factorList` and `factorIndexList` arguments.

Both `srcField` and `dstField` are interpreted as sequentialized vectors. The sequence is defined by the order of DistGrid dimensions and the order of tiles within the DistGrid or by user-supplied arbitrary sequence indices. See section 29.2.18 for details on the definition of *sequence indices*. SMM corresponds to an identity mapping of the source Field vector to the destination Field vector.

Source and destination Fields may be of different <type><kind>. Further source and destination Fields may differ in shape, however, the number of elements must match.

It is erroneous to specify the identical Field object for srcField and dstField arguments.

The routine returns an `ESMF_RouteHandle` that can be used to call `ESMF_FieldSMM()` on any pair of Fields that matches `srcField` and `dstField` in *type*, *kind*, and memory layout of the *gridded* dimensions. However, the size, number, and index order of *ungridded* dimensions may be different. See section 38.2.5 for a more detailed discussion of RouteHandle reusability.

This method is overloaded for:
`ESMF_TYPEKIND_I4`, `ESMF_TYPEKIND_I8`,
`ESMF_TYPEKIND_R4`, `ESMF_TYPEKIND_R8`.

This call is collective across the current VM.

For examples and associated documentation regarding this method see Section 27.3.33.

The arguments are:

srcField `ESMF_Field` with source data.

dstField `ESMF_Field` with destination data. The data in this Field may be destroyed by this call.

routehandle Handle to the precomputed Route.

factorList List of non-zero coefficients.

factorIndexList Pairs of sequence indices for the factors stored in `factorList`.

The second dimension of `factorIndexList` steps through the list of pairs, i.e. `size(factorIndexList,2) == size(factorList)`. The first dimension of `factorIndexList` is either of size 2 or size 4.

The second dimension of `factorIndexList` steps through the list of

In the *size 2 format* `factorIndexList(1,:)` specifies the sequence index of the source element in the `srcField` while `factorIndexList(2,:)` specifies the sequence index of the destination element in `dstField`. For this format to be a valid option source and destination Fields must have matching number of tensor elements (the product of the sizes of all Field tensor dimensions). Under this condition an identity matrix can be applied within the space of tensor elements for each sparse matrix factor.

The *size 4 format* is more general and does not require a matching tensor element count. Here the `factorIndexList(1,:)` specifies the sequence index while `factorIndexList(2,:)` specifies the tensor sequence index of the source element in the `srcField`. Further `factorIndexList(3,:)` specifies the sequence index and `factorIndexList(4,:)` specifies the tensor sequence index of the destination element in the `dstField`.

See section 29.2.18 for details on the definition of Field *sequence indices* and *tensor sequence indices*.

[ignoreUnmatchedIndices] A logical flag that affects the behavior for when sequence indices in the sparse matrix are encountered that do not have a match on the `srcField` or `dstField` side. The default setting is `.false.`, indicating that it is an error when such a situation is encountered. Setting `ignoreUnmatchedIndices` to `.true.` ignores entries with unmatched indices.

[srcTermProcessing] The `srcTermProcessing` parameter controls how many source terms, located on the same PET and summing into the same destination element, are summed into partial sums on the source PET before being transferred to the destination PET. A value of 0 indicates that the entire arithmetic is done on the destination PET; source elements are neither multiplied by their factors nor added into partial sums before being sent off by the source PET. A value of 1 indicates that source elements are multiplied by their factors on the source side before being sent to the destination PET. Larger values of `srcTermProcessing` indicate the maximum number of terms in the partial sums on the source side.

Note that partial sums may lead to bit-for-bit differences in the results. See section 38.2.1 for an in-depth discussion of *all* bit-for-bit reproducibility aspects related to route-based communication methods.

The `ESMF_FieldSMMStore()` method implements an auto-tuning scheme for the `srcTermProcessing` parameter. The intent on the `srcTermProcessing` argument is `"inout"` in order to support both overriding and accessing the auto-tuning parameter. If an argument $>= 0$ is specified, it is used for the `srcTermProcessing` parameter, and the auto-tuning phase is skipped. In this case the `srcTermProcessing` argument is not modified on return. If the provided argument is < 0, the `srcTermProcessing` parameter is determined internally using the auto-tuning scheme. In this case the `srcTermProcessing` argument is re-set to the internally determined value on return. Auto-tuning is also used if the optional `srcTermProcessing` argument is omitted.

[pipelineDepth] The `pipelineDepth` parameter controls how many messages a PET may have outstanding during a sparse matrix exchange. Larger values of `pipelineDepth` typically lead to better performance. However, on some systems too large a value may lead to performance degradation, or runtime errors.

Note that the pipeline depth has no effect on the bit-for-bit reproducibility of the results. However, it may affect the performance reproducibility of the exchange.

The `ESMF_FieldSMMStore()` method implements an auto-tuning scheme for the `pipelineDepth` parameter. The intent on the `pipelineDepth` argument is `"inout"` in order to support both overriding and accessing the auto-tuning parameter. If an argument $>= 0$ is specified, it is used for the `pipelineDepth` parameter, and the auto-tuning phase is skipped. In this case the `pipelineDepth` argument is not modified on return. If the provided argument is < 0, the `pipelineDepth` parameter is determined internally using the auto-tuning scheme. In this case the `pipelineDepth` argument is re-set to the internally determined value on return. Auto-tuning is also used if the optional `pipelineDepth` argument is omitted.

[rc] Return code; equals `ESMF_SUCCESS` if there are no errors.

27.6.80 ESMF_FieldSMMStore - Precompute Field sparse matrix multiplication and transpose with local factors

INTERFACE:

```
! Private name; call using ESMF_FieldSMMStore()
subroutine ESMF_FieldSMMStore<type><kind>TR(srcField, dstField, &
       routehandle, transposeRoutehandle, factorList, factorIndexList, &
       ignoreUnmatchedIndices, srcTermProcessing, &
       pipelineDepth, rc)
```

ARGUMENTS:

```
 type(ESMF_Field),          intent(inout)           :: srcField
 type(ESMF_Field),          intent(inout)           :: dstField
```

```
    type(ESMF_RouteHandle),   intent(inout)           :: routehandle
    type(ESMF_RouteHandle),   intent(inout)           :: transposeRoutehandle
    <type>(ESMF_KIND_<kind>), intent(in)              :: factorList(:)
    integer,                  intent(in),             :: factorIndexList(:,:)
-- The following arguments require argument keyword syntax (e.g. rc=rc). --
    logical,                  intent(in),    optional :: ignoreUnmatchedIndices
    integer,                  intent(inout), optional :: srcTermProcessing
    integer,                  intent(inout), optional :: pipeLineDepth
    integer,                  intent(out),   optional :: rc
```

DESCRIPTION:

Store a Field sparse matrix multiplication operation from `srcField` to `dstField`. PETs that specify non-zero matrix coefficients must use the <type><kind> overloaded interface and provide the `factorList` and `factorIndexList` arguments. Providing `factorList` and `factorIndexList` arguments with `size(factorList) = (/0/)` and `size(factorIndexList) = (/2,0/)` or `(/4,0/)` indicates that a PET does not provide matrix elements. Alternatively, PETs that do not provide matrix elements may also call into the overloaded interface *without* `factorList` and `factorIndexList` arguments.

Both `srcField` and `dstField` are interpreted as sequentialized vectors. The sequence is defined by the order of DistGrid dimensions and the order of tiles within the DistGrid or by user-supplied arbitrary sequence indices. See section 29.2.18 for details on the definition of *sequence indices*. SMM corresponds to an identity mapping of the source Field vector to the destination Field vector.

Source and destination Fields may be of different <type><kind>. Further source and destination Fields may differ in shape, however, the number of elements must match.

It is erroneous to specify the identical Field object for srcField and dstField arguments.

The routine returns an `ESMF_RouteHandle` that can be used to call `ESMF_FieldSMM()` on any pair of Fields that matches `srcField` and `dstField` in *type*, *kind*, and memory layout of the *gridded* dimensions. However, the size, number, and index order of *ungridded* dimensions may be different. See section 38.2.5 for a more detailed discussion of RouteHandle reusability.

This method is overloaded for:
`ESMF_TYPEKIND_I4`, `ESMF_TYPEKIND_I8`,
`ESMF_TYPEKIND_R4`, `ESMF_TYPEKIND_R8`.

This call is collective across the current VM.

For examples and associated documentation regarding this method see Section 27.3.33.

The arguments are:

srcField `ESMF_Field` with source data. The data in this Array may be destroyed by this call.

dstField `ESMF_Field` with destination data. The data in this Field may be destroyed by this call.

routehandle Handle to the precomputed Route.

transposeRoutehandle A handle to the transposed matrix operation is returned. The transposed operation goes from `dstArray` to `srcArray`.

factorList List of non-zero coefficients.

factorIndexList Pairs of sequence indices for the factors stored in `factorList`.

The second dimension of `factorIndexList` steps through the list of pairs, i.e. `size(factorIndexList,2) == size(factorList)`. The first dimension of `factorIndexList` is either of size 2 or size 4.

The second dimension of `factorIndexList` steps through the list of

In the *size 2 format* `factorIndexList(1,:)` specifies the sequence index of the source element in the `srcField` while `factorIndexList(2,:)` specifies the sequence index of the destination element in `dstField`. For this format to be a valid option source and destination Fields must have matching number of tensor elements (the product of the sizes of all Field tensor dimensions). Under this condition an identity matrix can be applied within the space of tensor elements for each sparse matrix factor.

The *size 4 format* is more general and does not require a matching tensor element count. Here the `factorIndexList(1,:)` specifies the sequence index while `factorIndexList(2,:)` specifies the tensor sequence index of the source element in the `srcField`. Further `factorIndexList(3,:)` specifies the sequence index and `factorIndexList(4,:)` specifies the tensor sequence index of the destination element in the `dstField`.

See section 29.2.18 for details on the definition of Field *sequence indices* and *tensor sequence indices*.

[ignoreUnmatchedIndices] A logical flag that affects the behavior for when sequence indices in the sparse matrix are encountered that do not have a match on the `srcField` or `dstField` side. The default setting is `.false.`, indicating that it is an error when such a situation is encountered. Setting `ignoreUnmatchedIndices` to `.true.` ignores entries with unmatched indices.

[srcTermProcessing] The `srcTermProcessing` parameter controls how many source terms, located on the same PET and summing into the same destination element, are summed into partial sums on the source PET before being transferred to the destination PET. A value of 0 indicates that the entire arithmetic is done on the destination PET; source elements are neither multiplied by their factors nor added into partial sums before being sent off by the source PET. A value of 1 indicates that source elements are multiplied by their factors on the source side before being sent to the destination PET. Larger values of `srcTermProcessing` indicate the maximum number of terms in the partial sums on the source side.

Note that partial sums may lead to bit-for-bit differences in the results. See section 38.2.1 for an in-depth discussion of *all* bit-for-bit reproducibility aspects related to route-based communication methods.

The `ESMF_FieldSMMStore()` method implements an auto-tuning scheme for the `srcTermProcessing` parameter. The intent on the `srcTermProcessing` argument is `"inout"` in order to support both overriding and accessing the auto-tuning parameter. If an argument $>= 0$ is specified, it is used for the `srcTermProcessing` parameter, and the auto-tuning phase is skipped. In this case the `srcTermProcessing` argument is not modified on return. If the provided argument is < 0, the `srcTermProcessing` parameter is determined internally using the auto-tuning scheme. In this case the `srcTermProcessing` argument is re-set to the internally determined value on return. Auto-tuning is also used if the optional `srcTermProcessing` argument is omitted.

[pipelineDepth] The `pipelineDepth` parameter controls how many messages a PET may have outstanding during a sparse matrix exchange. Larger values of `pipelineDepth` typically lead to better performance. However, on some systems too large a value may lead to performance degradation, or runtime errors.

Note that the pipeline depth has no effect on the bit-for-bit reproducibility of the results. However, it may affect the performance reproducibility of the exchange.

The `ESMF_FieldSMMStore()` method implements an auto-tuning scheme for the `pipelineDepth` parameter. The intent on the `pipelineDepth` argument is `"inout"` in order to support both overriding and accessing the auto-tuning parameter. If an argument $>= 0$ is specified, it is used for the `pipelineDepth` parameter, and the auto-tuning phase is skipped. In this case the `pipelineDepth` argument is not modified on return. If the provided argument is < 0, the `pipelineDepth` parameter is determined internally using the auto-tuning scheme. In this case the `pipelineDepth` argument is re-set to the internally determined value on return. Auto-tuning is also used if the optional `pipelineDepth` argument is omitted.

[rc] Return code; equals `ESMF_SUCCESS` if there are no errors.

27.6.81 ESMF_FieldSMMStore - Precompute Field sparse matrix multiplication without local factors

INTERFACE:

```
! Private name; call using ESMF_FieldSMMStore()
  subroutine ESMF_FieldSMMStoreNF(srcField, dstField, &
      routehandle, ignoreUnmatchedIndices, &
      srcTermProcessing, pipelineDepth, rc)
```

ARGUMENTS:

```
        type(ESMF_Field),       intent(in)              :: srcField
        type(ESMF_Field),       intent(inout)           :: dstField
        type(ESMF_RouteHandle), intent(inout)           :: routehandle
-- The following arguments require argument keyword syntax (e.g. rc=rc). --
        logical,                intent(in),    optional :: ignoreUnmatchedIndices
        integer,                intent(inout), optional :: srcTermProcessing
        integer,                intent(inout), optional :: pipeLineDepth
        integer,                intent(out),   optional :: rc
```

STATUS:

- This interface is backward compatible with ESMF versions starting at 5.2.0r. If code using this interface compiles with any version of ESMF starting with 5.2.0r, then it will compile with the current version.
- This interface was modified since ESMF version 5.2.0r. The fact that code using this interface compiles with the current ESMF version does not guarantee that it compiles with previous versions of this interface. If user code compatibility with version 5.2.0r is desired then care must be taken to limit the use of this interface to features that were available in the 5.2.0r release.
  Changes made after the 5.2.0r release:

  6.1.0 Added arguments `srcTermProcessing`, `pipelineDepth` The two arguments `srcTermProcessing` and `pipelineDepth` provide access to the tuning parameters affecting the sparse matrix execution.

  7.0.0 Added argument `transposeRoutehandle` to allow a handle to the transposed matrix operation to be returned.
  Added argument `ignoreUnmatchedIndices` to support sparse matrices that contain elements with indices that do not have a match within the source or destination Array.

  7.1.0r Removed argument `transposeRoutehandle` and provide it via interface overloading instead. This allows argument `srcField` to stay strictly intent(in) for this entry point.

DESCRIPTION:

Store a Field sparse matrix multiplication operation from `srcField` to `dstField`. PETs that specify non-zero matrix coefficients must use the <type><kind> overloaded interface and provide the `factorList` and `factorIndexList` arguments. Providing `factorList` and `factorIndexList` arguments with `size(factorList) = (/0/)` and `size(factorIndexList) = (/2,0/)` or `(/4,0/)` indicates that a PET does not provide matrix elements. Alternatively, PETs that do not provide matrix elements may also call into the overloaded interface *without* `factorList` and `factorIndexList` arguments.

Both `srcField` and `dstField` are interpreted as sequentialized vectors. The sequence is defined by the order of DistGrid dimensions and the order of tiles within the DistGrid or by user-supplied arbitrary sequence indices. See

section 29.2.18 for details on the definition of *sequence indices*. SMM corresponds to an identity mapping of the source Field vector to the destination Field vector.

Source and destination Fields may be of different <type><kind>. Further source and destination Fields may differ in shape, however, the number of elements must match.

It is erroneous to specify the identical Field object for srcField and dstField arguments.

The routine returns an `ESMF_RouteHandle` that can be used to call `ESMF_FieldSMM()` on any pair of Fields that matches `srcField` and `dstField` in *type*, *kind*, and memory layout of the *gridded* dimensions. However, the size, number, and index order of *ungridded* dimensions may be different. See section 38.2.5 for a more detailed discussion of RouteHandle reusability.

This method is overloaded for:
`ESMF_TYPEKIND_I4`, `ESMF_TYPEKIND_I8`,
`ESMF_TYPEKIND_R4`, `ESMF_TYPEKIND_R8`.

This call is collective across the current VM.

For examples and associated documentation regarding this method see Section 27.3.33.

The arguments are:

srcField `ESMF_Field` with source data.

dstField `ESMF_Field` with destination data. The data in this Field may be destroyed by this call.

routehandle Handle to the precomputed Route.

[ignoreUnmatchedIndices] A logical flag that affects the behavior for when sequence indices in the sparse matrix are encountered that do not have a match on the `srcField` or `dstField` side. The default setting is `.false.`, indicating that it is an error when such a situation is encountered. Setting `ignoreUnmatchedIndices` to `.true.` ignores entries with unmatched indices.

[srcTermProcessing] The `srcTermProcessing` parameter controls how many source terms, located on the same PET and summing into the same destination element, are summed into partial sums on the source PET before being transferred to the destination PET. A value of 0 indicates that the entire arithmetic is done on the destination PET; source elements are neither multiplied by their factors nor added into partial sums before being sent off by the source PET. A value of 1 indicates that source elements are multiplied by their factors on the source side before being sent to the destination PET. Larger values of `srcTermProcessing` indicate the maximum number of terms in the partial sums on the source side.

Note that partial sums may lead to bit-for-bit differences in the results. See section 38.2.1 for an in-depth discussion of *all* bit-for-bit reproducibility aspects related to route-based communication methods.

The `ESMF_FieldSMMStore()` method implements an auto-tuning scheme for the `srcTermProcessing` parameter. The intent on the `srcTermProcessing` argument is `"inout"` in order to support both overriding and accessing the auto-tuning parameter. If an argument $>= 0$ is specified, it is used for the `srcTermProcessing` parameter, and the auto-tuning phase is skipped. In this case the `srcTermProcessing` argument is not modified on return. If the provided argument is < 0, the `srcTermProcessing` parameter is determined internally using the auto-tuning scheme. In this case the `srcTermProcessing` argument is re-set to the internally determined value on return. Auto-tuning is also used if the optional `srcTermProcessing` argument is omitted.

[pipelineDepth] The `pipelineDepth` parameter controls how many messages a PET may have outstanding during a sparse matrix exchange. Larger values of `pipelineDepth` typically lead to better performance. However, on some systems too large a value may lead to performance degradation, or runtime errors.

Note that the pipeline depth has no effect on the bit-for-bit reproducibility of the results. However, it may affect the performance reproducibility of the exchange.

The `ESMF_FieldSMMStore()` method implements an auto-tuning scheme for the `pipelineDepth` parameter. The intent on the `pipelineDepth` argument is "`inout`" in order to support both overriding and accessing the auto-tuning parameter. If an argument $>= 0$ is specified, it is used for the `pipelineDepth` parameter, and the auto-tuning phase is skipped. In this case the `pipelineDepth` argument is not modified on return. If the provided argument is < 0, the `pipelineDepth` parameter is determined internally using the auto-tuning scheme. In this case the `pipelineDepth` argument is re-set to the internally determined value on return. Auto-tuning is also used if the optional `pipelineDepth` argument is omitted.

[rc] Return code; equals `ESMF_SUCCESS` if there are no errors.

27.6.82 ESMF_FieldSMMStore - Precompute Field sparse matrix multiplication and transpose without local factors

INTERFACE:

```
! Private name; call using ESMF_FieldSMMStore()
  subroutine ESMF_FieldSMMStoreNFTR(srcField, dstField, &
      routehandle, transposeRoutehandle, ignoreUnmatchedIndices, &
      srcTermProcessing, pipelineDepth, rc)
```

ARGUMENTS:

```
        type(ESMF_Field),       intent(inout)           :: srcField
        type(ESMF_Field),       intent(inout)           :: dstField
        type(ESMF_RouteHandle), intent(inout)           :: routehandle
        type(ESMF_RouteHandle), intent(inout)           :: transposeRoutehandle
 -- The following arguments require argument keyword syntax (e.g. rc=rc). --
        logical,                intent(in),    optional :: ignoreUnmatchedIndices
        integer,                intent(inout), optional :: srcTermProcessing
        integer,                intent(inout), optional :: pipeLineDepth
        integer,                intent(out),   optional :: rc
```

DESCRIPTION:

Store a Field sparse matrix multiplication operation from `srcField` to `dstField`. PETs that specify non-zero matrix coefficients must use the <type><kind> overloaded interface and provide the `factorList` and `factorIndexList` arguments. Providing `factorList` and `factorIndexList` arguments with `size(factorList) = (/0/)` and `size(factorIndexList) = (/2,0/)` or `(/4,0/)` indicates that a PET does not provide matrix elements. Alternatively, PETs that do not provide matrix elements may also call into the overloaded interface *without* `factorList` and `factorIndexList` arguments.

Both `srcField` and `dstField` are interpreted as sequentialized vectors. The sequence is defined by the order of DistGrid dimensions and the order of tiles within the DistGrid or by user-supplied arbitrary sequence indices. See section 29.2.18 for details on the definition of *sequence indices*. SMM corresponds to an identity mapping of the source Field vector to the destination Field vector.

Source and destination Fields may be of different <type><kind>. Further source and destination Fields may differ in shape, however, the number of elements must match.

It is erroneous to specify the identical Field object for srcField and dstField arguments.

The routine returns an `ESMF_RouteHandle` that can be used to call `ESMF_FieldSMM()` on any pair of Fields that matches `srcField` and `dstField` in *type*, *kind*, and memory layout of the *gridded* dimensions. However, the size, number, and index order of *ungridded* dimensions may be different. See section 38.2.5 for a more detailed discussion of RouteHandle reusability.

This method is overloaded for:
`ESMF_TYPEKIND_I4`, `ESMF_TYPEKIND_I8`,
`ESMF_TYPEKIND_R4`, `ESMF_TYPEKIND_R8`.

This call is collective across the current VM.

For examples and associated documentation regarding this method see Section 27.3.33.

The arguments are:

srcField `ESMF_Field` with source data. The data in this Field may be destroyed by this call.

dstField `ESMF_Field` with destination data. The data in this Field may be destroyed by this call.

routehandle Handle to the precomputed Route.

transposeRoutehandle A handle to the transposed matrix operation is returned. The transposed operation goes from `dstArray` to `srcArray`.

[ignoreUnmatchedIndices] A logical flag that affects the behavior for when sequence indices in the sparse matrix are encountered that do not have a match on the `srcField` or `dstField` side. The default setting is `.false.`, indicating that it is an error when such a situation is encountered. Setting `ignoreUnmatchedIndices` to `.true.` ignores entries with unmatched indices.

[srcTermProcessing] The `srcTermProcessing` parameter controls how many source terms, located on the same PET and summing into the same destination element, are summed into partial sums on the source PET before being transferred to the destination PET. A value of 0 indicates that the entire arithmetic is done on the destination PET; source elements are neither multiplied by their factors nor added into partial sums before being sent off by the source PET. A value of 1 indicates that source elements are multiplied by their factors on the source side before being sent to the destination PET. Larger values of `srcTermProcessing` indicate the maximum number of terms in the partial sums on the source side.

Note that partial sums may lead to bit-for-bit differences in the results. See section 38.2.1 for an in-depth discussion of *all* bit-for-bit reproducibility aspects related to route-based communication methods.

The `ESMF_FieldSMMStore()` method implements an auto-tuning scheme for the `srcTermProcessing` parameter. The intent on the `srcTermProcessing` argument is `"inout"` in order to support both overriding and accessing the auto-tuning parameter. If an argument $>= 0$ is specified, it is used for the `srcTermProcessing` parameter, and the auto-tuning phase is skipped. In this case the `srcTermProcessing` argument is not modified on return. If the provided argument is < 0, the `srcTermProcessing` parameter is determined internally using the auto-tuning scheme. In this case the `srcTermProcessing` argument is re-set to the internally determined value on return. Auto-tuning is also used if the optional `srcTermProcessing` argument is omitted.

[pipelineDepth] The `pipelineDepth` parameter controls how many messages a PET may have outstanding during a sparse matrix exchange. Larger values of `pipelineDepth` typically lead to better performance. However, on some systems too large a value may lead to performance degradation, or runtime errors.

Note that the pipeline depth has no effect on the bit-for-bit reproducibility of the results. However, it may affect the performance reproducibility of the exchange.

The `ESMF_FieldSMMStore()` method implements an auto-tuning scheme for the `pipelineDepth` parameter. The intent on the `pipelineDepth` argument is `"inout"` in order to support both overriding and accessing the auto-tuning parameter. If an argument $>= 0$ is specified, it is used for the `pipelineDepth` parameter, and the auto-tuning phase is skipped. In this case the `pipelineDepth` argument is not modified

on return. If the provided argument is < 0, the `pipelineDepth` parameter is determined internally using the auto-tuning scheme. In this case the `pipelineDepth` argument is re-set to the internally determined value on return. Auto-tuning is also used if the optional `pipelineDepth` argument is omitted.

[rc] Return code; equals `ESMF_SUCCESS` if there are no errors.

27.6.83 ESMF_FieldSMMStore - Precompute sparse matrix multiplication using factors read from file

INTERFACE:

```
  ! Private name; call using ESMF_FieldSMMStore()
    subroutine ESMF_FieldSMMStoreFromFile(srcField, dstField, filename, &
      routehandle, ignoreUnmatchedIndices, &
      srcTermProcessing, pipelineDepth, rc)

  ! ARGUMENTS:
      type(ESMF_Field),       intent(in)              :: srcField
      type(ESMF_Field),       intent(inout)           :: dstField
      character(len=*),       intent(in)              :: filename
      type(ESMF_RouteHandle), intent(inout)           :: routehandle
-- The following arguments require argument keyword syntax (e.g. rc=rc). --
      logical,                intent(in),    optional :: ignoreUnmatchedIndices
      integer,                intent(inout), optional :: srcTermProcessing
      integer,                intent(inout), optional :: pipeLineDepth
      integer,                intent(out),   optional :: rc
```

DESCRIPTION:

Compute an `ESMF_RouteHandle` using factors read from file.

The arguments are:

srcField `ESMF_Field` with source data.

dstField `ESMF_Field` with destination data. The data in this Field may be destroyed by this call.

filename Path to the file containing weights for creating an `ESMF_RouteHandle`. See (12.9) for a description of the SCRIP weight file format. Only "row", "col", and "S" variables are required. They must be one-dimensionsal with dimension "n_s".

routehandle Handle to the `ESMF_RouteHandle`.

[ignoreUnmatchedIndices] A logical flag that affects the behavior for when sequence indices in the sparse matrix are encountered that do not have a match on the `srcField` or `dstField` side. The default setting is `.false.`, indicating that it is an error when such a situation is encountered. Setting `ignoreUnmatchedIndices` to `.true.` ignores entries with unmatched indices.

[srcTermProcessing] The `srcTermProcessing` parameter controls how many source terms, located on the same PET and summing into the same destination element, are summed into partial sums on the source PET before being transferred to the destination PET. A value of 0 indicates that the entire arithmetic is done on the destination PET; source elements are neither multiplied by their factors nor added into partial sums before being sent

off by the source PET. A value of 1 indicates that source elements are multiplied by their factors on the source side before being sent to the destination PET. Larger values of `srcTermProcessing` indicate the maximum number of terms in the partial sums on the source side.

Note that partial sums may lead to bit-for-bit differences in the results. See section 38.2.1 for an in-depth discussion of *all* bit-for-bit reproducibility aspects related to route-based communication methods.

The `ESMF_FieldSMMStore()` method implements an auto-tuning scheme for the `srcTermProcessing` parameter. The intent on the `srcTermProcessing` argument is "`inout`" in order to support both overriding and accessing the auto-tuning parameter. If an argument $>= 0$ is specified, it is used for the `srcTermProcessing` parameter, and the auto-tuning phase is skipped. In this case the `srcTermProcessing` argument is not modified on return. If the provided argument is < 0, the `srcTermProcessing` parameter is determined internally using the auto-tuning scheme. In this case the `srcTermProcessing` argument is re-set to the internally determined value on return. Auto-tuning is also used if the optional `srcTermProcessing` argument is omitted.

[pipelineDepth] The `pipelineDepth` parameter controls how many messages a PET may have outstanding during a sparse matrix exchange. Larger values of `pipelineDepth` typically lead to better performance. However, on some systems too large a value may lead to performance degradation, or runtime errors.

Note that the pipeline depth has no effect on the bit-for-bit reproducibility of the results. However, it may affect the performance reproducibility of the exchange. The `ESMF_FieldSMMStore()` method implements an auto-tuning scheme for the `pipelineDepth` parameter. The intent on the `pipelineDepth` argument is "`inout`" in order to support both overriding and accessing the auto-tuning parameter. If an argument $>= 0$ is specified, it is used for the `pipelineDepth` parameter, and the auto-tuning phase is skipped. In this case the `pipelineDepth` argument is not modified on return. If the provided argument is < 0, the `pipelineDepth` parameter is determined internally using the auto-tuning scheme. In this case the `pipelineDepth` argument is re-set to the internally determined value on return. Auto-tuning is also used if the optional `pipelineDepth` argument is omitted.

[rc] Return code; equals `ESMF_SUCCESS` if there are no errors.

27.6.84 ESMF_FieldSMMStore - Precompute sparse matrix multiplication and transpose using factors read from file

INTERFACE:

```
  ! Private name; call using ESMF_FieldSMMStore()
    subroutine ESMF_FieldSMMStoreFromFileTR(srcField, dstField, filename, &
      routehandle, transposeRoutehandle, &
      ignoreUnmatchedIndices, srcTermProcessing, pipelineDepth, rc)

  ! ARGUMENTS:
      type(ESMF_Field),       intent(inout)           :: srcField
      type(ESMF_Field),       intent(inout)           :: dstField
      character(len=*),       intent(in)              :: filename
      type(ESMF_RouteHandle), intent(inout)           :: routehandle
      type(ESMF_RouteHandle), intent(inout)           :: transposeRoutehandle
-- The following arguments require argument keyword syntax (e.g. rc=rc). --
      logical,                intent(in),    optional :: ignoreUnmatchedIndices
      integer,                intent(inout), optional :: srcTermProcessing
      integer,                intent(inout), optional :: pipeLineDepth
      integer,                intent(out),   optional :: rc
```

DESCRIPTION:

Compute an `ESMF_RouteHandle` using factors read from file.

The arguments are:

srcField `ESMF_Field` with source data. The data in this Array may be destroyed by this call.

dstField `ESMF_Field` with destination data. The data in this Field may be destroyed by this call.

filename Path to the file containing weights for creating an `ESMF_RouteHandle`. See (12.9) for a description of the SCRIP weight file format. Only "row", "col", and "S" variables are required. They must be one-dimensionsal with dimension "n_s".

routehandle Handle to the `ESMF_RouteHandle`.

transposeRoutehandle A handle to the transposed matrix operation is returned. The transposed operation goes from `dstArray` to `srcArray`.

[ignoreUnmatchedIndices] A logical flag that affects the behavior for when sequence indices in the sparse matrix are encountered that do not have a match on the `srcField` or `dstField` side. The default setting is `.false.`, indicating that it is an error when such a situation is encountered. Setting `ignoreUnmatchedIndices` to `.true.` ignores entries with unmatched indices.

[srcTermProcessing] The `srcTermProcessing` parameter controls how many source terms, located on the same PET and summing into the same destination element, are summed into partial sums on the source PET before being transferred to the destination PET. A value of 0 indicates that the entire arithmetic is done on the destination PET; source elements are neither multiplied by their factors nor added into partial sums before being sent off by the source PET. A value of 1 indicates that source elements are multiplied by their factors on the source side before being sent to the destination PET. Larger values of `srcTermProcessing` indicate the maximum number of terms in the partial sums on the source side.

Note that partial sums may lead to bit-for-bit differences in the results. See section 38.2.1 for an in-depth discussion of *all* bit-for-bit reproducibility aspects related to route-based communication methods.

The `ESMF_FieldSMMStore()` method implements an auto-tuning scheme for the `srcTermProcessing` parameter. The intent on the `srcTermProcessing` argument is `"inout"` in order to support both overriding and accessing the auto-tuning parameter. If an argument $>= 0$ is specified, it is used for the `srcTermProcessing` parameter, and the auto-tuning phase is skipped. In this case the `srcTermProcessing` argument is not modified on return. If the provided argument is < 0, the `srcTermProcessing` parameter is determined internally using the auto-tuning scheme. In this case the `srcTermProcessing` argument is re-set to the internally determined value on return. Auto-tuning is also used if the optional `srcTermProcessing` argument is omitted.

[pipelineDepth] The `pipelineDepth` parameter controls how many messages a PET may have outstanding during a sparse matrix exchange. Larger values of `pipelineDepth` typically lead to better performance. However, on some systems too large a value may lead to performance degradation, or runtime errors.

Note that the pipeline depth has no effect on the bit-for-bit reproducibility of the results. However, it may affect the performance reproducibility of the exchange. The `ESMF_FieldSMMStore()` method implements an auto-tuning scheme for the `pipelineDepth` parameter. The intent on the `pipelineDepth` argument is `"inout"` in order to support both overriding and accessing the auto-tuning parameter. If an argument $>= 0$ is specified, it is used for the `pipelineDepth` parameter, and the auto-tuning phase is skipped. In this case the `pipelineDepth` argument is not modified on return. If the provided argument is < 0, the `pipelineDepth` parameter is determined internally using the auto-tuning scheme. In this case the `pipelineDepth` argument is re-set to the internally determined value on return. Auto-tuning is also used if the optional `pipelineDepth` argument is omitted.

[rc] Return code; equals `ESMF_SUCCESS` if there are no errors.

27.6.85 ESMF_FieldValidate - Check validity of a Field

INTERFACE:

```
      subroutine ESMF_FieldValidate(field, rc)
```

ARGUMENTS:

```
      type(ESMF_Field), intent(in)            :: field
 -- The following arguments require argument keyword syntax (e.g. rc=rc). --
      integer,          intent(out), optional :: rc
```

STATUS:

- This interface is backward compatible with ESMF versions starting at 5.2.0r. If code using this interface compiles with any version of ESMF starting with 5.2.0r, then it will compile with the current version.

DESCRIPTION:

Validates that the `field` is internally consistent. Currently this method determines if the `field` is uninitialized or already destroyed. It validates the contained array and grid objects. The code also checks if the array and grid sizes agree. This check compares the distgrid contained in array and grid; then it proceeds to compare the computational bounds contained in array and grid.

The method returns an error code if problems are found.

The arguments are:

field `ESMF_Field` to validate.

[rc] Return code; equals `ESMF_SUCCESS` if the `field` is valid.

27.6.86 ESMF_FieldWrite - Write Field data into a file

INTERFACE:

```
   subroutine ESMF_FieldWrite(field, fileName,   &
       variableName, convention, purpose, overwrite, status, timeslice, iofmt, rc)
```

ARGUMENTS:

```
     type(ESMF_Field),           intent(in)             :: field
     character(*),               intent(in)             :: fileName
 -- The following arguments require argument keyword syntax (e.g. rc=rc). --
     character(*),               intent(in),  optional  :: variableName
     character(*),               intent(in),  optional  :: convention
     character(*),               intent(in),  optional  :: purpose
     logical,                    intent(in),  optional  :: overwrite
     type(ESMF_FileStatus_Flag), intent(in),  optional  :: status
     integer,                    intent(in),  optional  :: timeslice
     type(ESMF_IOFmt_Flag),      intent(in),  optional  :: iofmt
     integer,                    intent(out), optional  :: rc
```

DESCRIPTION:

Write Field data into a file. For this API to be functional, the environment variable `ESMF_PIO` should be set to either "internal" or "external" when the ESMF library is built. Please see the section on Data I/O, 39.2.

When `convention` and `purpose` arguments are specified, a NetCDF variable can be created with user-specified dimension labels and attributes. Dimension labels may be defined for both gridded and ungridded dimensions. Dimension labels for gridded dimensions are specified at the Grid level by attaching an ESMF Attribute package to it. The Attribute package must contain an attribute named by the pre-defined ESMF parameter `ESMF_ATT_GRIDDED_DIM_LABELS`. The corresponding value is an array of character strings specifying the desired names of the dimensions. Likewise, for ungridded dimensions, an Attribute package is attached at the Field level. The name of the name must be `ESMF_ATT_UNGRIDDED_DIM_LABELS`.

NetCDF attributes for the variable can also be specified. As with dimension labels, an Attribute package is added to the Field with the desired names and values. A value may be either a scalar character string, or a scalar or array of type integer, real, or double precision. Dimension label attributes can co-exist with variable attributes within a common Attribute package.

The arguments are:

field The `ESMF_Field` object that contains data to be written.

fileName The name of the output file to which Field data is written. If the Field is a multi-tile Array, then fileName must contain exactly one instance of "*"; this is a placeholder that will be replaced by the tile number, with each tile being written to a separate file. (For example, for a fileName of "myfile*.nc", tile 1 will be written to "myfile1.nc", tile 2 to "myfile2.nc", etc.) (This handling of the fileName for multi-tile I/O is subject to change.)

[variableName] Variable name in the output file; default is the "name" of field. Use this argument only in the I/O format (such as NetCDF) that supports variable name. If the I/O format does not support this (such as binary format), ESMF will return an error code.

[convention] Specifies an Attribute package associated with the Field, used to create NetCDF dimension labels and attributes for the variable in the file. When this argument is present, the `purpose` argument must also be present. Use this argument only with a NetCDF I/O format. If binary format is used, ESMF will return an error code.

[purpose] Specifies an Attribute package associated with the Field, used to create NetCDF dimension labels and attributes for the variable in the file. When this argument is present, the `convention` argument must also be present. Use this argument only with a NetCDF I/O format. If binary format is used, ESMF will return an error code.

[overwrite] A logical flag, the default is .false., i.e., existing field data may *not* be overwritten. If .true., only the data corresponding to the field's name will be overwritten. Note that it is always an error to attempt to overwrite a NetCDF variable with data which has a different shape.

[status] The file status. Please see Section 55.22 for the list of options. If not present, defaults to `ESMF_FILESTATUS_UNKNOWN`.

[timeslice] Some I/O formats (e.g. NetCDF) support the output of data in form of time slices. An unlimited dimension called `time` is defined in the file variable for this capability. The `timeslice` argument provides access to the `time` dimension, and must have a positive value. The behavior of this option may depend on the setting of the `overwrite` flag:

`overwrite = .false.`**:** If the timeslice value is less than the maximum time already in the file, the write will fail.

`overwrite = .true.`**:** Any positive timeslice value is valid.

By default, i.e. by omitting the `timeslice` argument, no provisions for time slicing are made in the output file, however, if the file already contains a time axis for the variable, a timeslice one greater than the maximum will be written.

[iofmt] The I/O format. Please see Section 55.30 for the list of options. If not present, defaults to `ESMF_IOFMT_NETCDF`.

[rc] Return code; equals `ESMF_SUCCESS` if there are no errors.

27.7 Class API: Field Utilities

27.7.1 ESMF_GridGetFieldBounds - Get precomputed DE-local Fortran data array bounds for creating a Field from a Grid and Fortran array

INTERFACE:

```
subroutine ESMF_GridGetFieldBounds(grid, &
    localDe, staggerloc, gridToFieldMap, &
    ungriddedLBound, ungriddedUBound, &
    totalLWidth, totalUWidth, &
    totalLBound, totalUBound, totalCount, rc)
```

ARGUMENTS:

```
     type(ESMF_Grid),       intent(in)            :: grid
 -- The following arguments require argument keyword syntax (e.g. rc=rc). --
     integer,               intent(in),  optional :: localDe
     type(ESMF_StaggerLoc), intent(in),  optional :: staggerloc
     integer,               intent(in),  optional :: gridToFieldMap(:)
     integer,               intent(in),  optional :: ungriddedLBound(:)
     integer,               intent(in),  optional :: ungriddedUBound(:)
     integer,               intent(in),  optional :: totalLWidth(:)
     integer,               intent(in),  optional :: totalUWidth(:)
     integer,               intent(out), optional :: totalLBound(:)
     integer,               intent(out), optional :: totalUBound(:)
     integer,               intent(out), optional :: totalCount(:)
     integer,               intent(out), optional :: rc
```

STATUS:

- This interface is backward compatible with ESMF versions starting at 5.2.0r. If code using this interface compiles with any version of ESMF starting with 5.2.0r, then it will compile with the current version.

DESCRIPTION:

Compute the lower and upper bounds of Fortran data array that can later be used in FieldCreate interface to create a `ESMF_Field` from a `ESMF_Grid` and the Fortran data array. For an example and associated documentation using this method see section 27.3.9.

The arguments are:

grid `ESMF_Grid`.

[localDe] Local DE for which information is requested. `[0,..,localDeCount-1]`. For `localDeCount==1` the `localDe` argument may be omitted, in which case it will default to `localDe=0`.

[staggerloc] Stagger location of data in grid cells. For valid predefined values and interpretation of results see section 32.2.6.

[gridToFieldMap] List with number of elements equal to the `grid`ls dimCount. The list elements map each dimension of the `grid` to a dimension in the `field` by specifying the appropriate `field` dimension index. The default is to map all of the `grid`ls dimensions against the lowest dimensions of the `field` in sequence, i.e. `gridToFieldMap` = (/1,2,3,.../). The values of all `gridToFieldMap` entries must be greater than or equal to one and smaller than or equal to the `field` rank. It is erroneous to specify the same `gridToFieldMap` entry multiple times. The total ungridded dimensions in the `field` are the total `field` dimensions less the dimensions in the `grid`. Ungridded dimensions must be in the same order they are stored in the `field`.

[ungriddedLBound] Lower bounds of the ungridded dimensions of the `field`. The number of elements in the `ungriddedLBound` is equal to the number of ungridded dimensions in the `field`. All ungridded dimensions of the `field` are also undistributed. When field dimension count is greater than grid dimension count, both ungriddedLBound and ungriddedUBound must be specified. When both are specified the values are checked for consistency. Note that the the ordering of these ungridded dimensions is the same as their order in the `field`.

[ungriddedUBound] Upper bounds of the ungridded dimensions of the `field`. The number of elements in the `ungriddedUBound` is equal to the number of ungridded dimensions in the `field`. All ungridded dimensions of the `field` are also undistributed. When field dimension count is greater than grid dimension count, both ungriddedLBound and ungriddedUBound must be specified. When both are specified the values are checked for consistency. Note that the the ordering of these ungridded dimensions is the same as their order in the `field`.

[totalLWidth] Lower bound of halo region. The size of this array is the number of dimensions in the `grid`. However, ordering of the elements needs to be the same as they appear in the `field`. Values default to 0. If values for totalLWidth are specified they must be reflected in the size of the `field`. That is, for each gridded dimension the `field` size should be max(`totalLWidth` + `totalUWidth` + `computationalCount`, `exclusiveCount`).

[totalUWidth] Upper bound of halo region. The size of this array is the number of dimensions in the `grid`. However, ordering of the elements needs to be the same as they appear in the `field`. Values default to 0. If values for totalUWidth are specified they must be reflected in the size of the `field`. That is, for each gridded dimension the `field` size should max(`totalLWidth` + `totalUWidth` + `computationalCount`, `exclusiveCount`).

[totalLBound] The relative lower bounds of Fortran data array to be used later in `ESMF_FieldCreate` from `ESMF_Grid` and Fortran data array. This is an output variable from this user interface.

The relative lower bounds of Fortran data array to be used

[totalUBound] The relative upper bounds of Fortran data array to be used later in `ESMF_FieldCreate` from `ESMF_Grid` and Fortran data array. This is an output variable from this user interface.

[totalCount] Number of elements need to be allocated for Fortran data array to be used later in `ESMF_FieldCreate` from `ESMF_Grid` and Fortran data array. This is an output variable from this user interface.

[rc] Return code; equals `ESMF_SUCCESS` if there are no errors.

27.7.2 ESMF_LocStreamGetFieldBounds - Get precomputed DE-local Fortran data array bounds for creating a Field from a LocStream and Fortran array

INTERFACE:

```
subroutine ESMF_LocStreamGetFieldBounds(locstream, &
    localDe, gridToFieldMap, &
    ungriddedLBound, ungriddedUBound, &
    totalLBound, totalUBound, totalCount, rc)
```

ARGUMENTS:

```
    type(ESMF_LocStream), intent(in)            :: locstream
 -- The following arguments require argument keyword syntax (e.g. rc=rc). --
    integer,              intent(in),  optional :: localDe
    integer,              intent(in),  optional :: gridToFieldMap(:)
    integer,              intent(in),  optional :: ungriddedLBound(:)
    integer,              intent(in),  optional :: ungriddedUBound(:)
    integer,              intent(out), optional :: totalLBound(:)
    integer,              intent(out), optional :: totalUBound(:)
    integer,              intent(out), optional :: totalCount(:)
    integer,              intent(out), optional :: rc
```

DESCRIPTION:

Compute the lower and upper bounds of Fortran data array that can later be used in FieldCreate interface to create a `ESMF_Field` from a `ESMF_LocStream` and the Fortran data array. For an example and associated documentation using this method see section 27.3.9.

The arguments are:

locstream `ESMF_LocStream`.

[localDe] Local DE for which information is requested. `[0,..,localDeCount-1]`. For `localDeCount==1` the `localDe` argument may be omitted, in which case it will default to `localDe=0`.

[gridToFieldMap] List with number of elements equal to 1. The list elements map the dimension of the `locstream` to a dimension in the `field` by specifying the appropriate `field` dimension index. The default is to map the `locstream`s dimension against the lowest dimension of the `field` in sequence, i.e. `gridToFieldMap` = (/1/). The values of all `gridToFieldMap` entries must be greater than or equal to one and smaller than or equal to the `field` rank. The total ungridded dimensions in the `field` are the total `field` dimensions less the dimensions in the `grid`. Ungridded dimensions must be in the same order they are stored in the field.

[ungriddedLBound] Lower bounds of the ungridded dimensions of the `field`. The number of elements in the `ungriddedLBound` is equal to the number of ungridded dimensions in the `field`. All ungridded dimensions of the `field` are also undistributed. When field dimension count is greater than 1, both ungriddedLBound and ungriddedUBound must be specified. When both are specified the values are checked for consistency. Note that the the ordering of these ungridded dimensions is the same as their order in the `field`.

[ungriddedUBound] Upper bounds of the ungridded dimensions of the `field`. The number of elements in the `ungriddedUBound` is equal to the number of ungridded dimensions in the `field`. All ungridded dimensions of the `field` are also undistributed. When field dimension count is greater than 1, both ungriddedLBound and

ungriddedUBound must be specified. When both are specified the values are checked for consistency. Note that the the ordering of these ungridded dimensions is the same as their order in the `field`.

[totalLBound] The relative lower bounds of Fortran data array to be used later in `ESMF_FieldCreate` from `ESMF_LocStream` and Fortran data array. This is an output variable from this user interface.

[totalUBound] The relative upper bounds of Fortran data array to be used later in `ESMF_FieldCreate` from `ESMF_LocStream` and Fortran data array. This is an output variable from this user interface.

[totalCount] Number of elements need to be allocated for Fortran data array to be used later in `ESMF_FieldCreate` from `ESMF_LocStream` and Fortran data array. This is an output variable from this user interface.

[rc] Return code; equals `ESMF_SUCCESS` if there are no errors.

27.7.3 ESMF_MeshGetFieldBounds - Get precomputed DE-local Fortran data array bounds for creating a Field from a Mesh and a Fortran array

INTERFACE:

```
subroutine ESMF_MeshGetFieldBounds(mesh, &
    meshloc, &
    localDe, gridToFieldMap, &
    ungriddedLBound, ungriddedUBound, &
    totalLBound, totalUBound, totalCount, rc)
```

ARGUMENTS:

```
    type(ESMF_Mesh), intent(in)            :: mesh
-- The following arguments require argument keyword syntax (e.g. rc=rc). --
    type(ESMF_MeshLoc),intent(in),optional :: meshloc
    integer,         intent(in),  optional :: localDe
    integer,         intent(in),  optional :: gridToFieldMap(:)
    integer,         intent(in),  optional :: ungriddedLBound(:)
    integer,         intent(in),  optional :: ungriddedUBound(:)
    integer,         intent(out), optional :: totalLBound(:)
    integer,         intent(out), optional :: totalUBound(:)
    integer,         intent(out), optional :: totalCount(:)
    integer,         intent(out), optional :: rc
```

DESCRIPTION:

Compute the lower and upper bounds of Fortran data array that can later be used in FieldCreate interface to create a `ESMF_Field` from a `ESMF_Mesh` and the Fortran data array. For an example and associated documentation using this method see section 27.3.9.

The arguments are:

mesh `ESMF_Mesh`.

[meshloc] Which part of the mesh to build the Field on. Can be set to either `ESMF_MESHLOC_NODE` or `ESMF_MESHLOC_ELEMENT`. If not set, defaults to `ESMF_MESHLOC_NODE`.

[localDe] Local DE for which information is requested. `[0,..,localDeCount-1]`. For `localDeCount==1` the `localDe` argument may be omitted, in which case it will default to `localDe=0`.

[gridToFieldMap] List with number of elements equal to the `grid`ls dimCount. The list elements map each dimension of the `grid` to a dimension in the `field` by specifying the appropriate `field` dimension index. The default is to map all of the `grid`ls dimensions against the lowest dimensions of the `field` in sequence, i.e. `gridToFieldMap` = (/1,2,3,.../). The values of all `gridToFieldMap` entries must be greater than or equal to one and smaller than or equal to the `field` rank. It is erroneous to specify the same `gridToFieldMap` entry multiple times. The total ungridded dimensions in the `field` are the total `field` dimensions less the dimensions in the `grid`. Ungridded dimensions must be in the same order they are stored in the field.

[ungriddedLBound] Lower bounds of the ungridded dimensions of the `field`. The number of elements in the `ungriddedLBound` is equal to the number of ungridded dimensions in the `field`. All ungridded dimensions of the `field` are also undistributed. When field dimension count is greater than grid dimension count, both ungriddedLBound and ungriddedUBound must be specified. When both are specified the values are checked for consistency. Note that the the ordering of these ungridded dimensions is the same as their order in the `field`.

[ungriddedUBound] Upper bounds of the ungridded dimensions of the `field`. The number of elements in the `ungriddedUBound` is equal to the number of ungridded dimensions in the `field`. All ungridded dimensions of the `field` are also undistributed. When field dimension count is greater than grid dimension count, both ungriddedLBound and ungriddedUBound must be specified. When both are specified the values are checked for consistency. Note that the the ordering of these ungridded dimensions is the same as their order in the `field`.

[totalLBound] The relative lower bounds of Fortran data array to be used later in `ESMF_FieldCreate` from `ESMF_Mesh` and Fortran data array. This is an output variable from this user interface.

[totalUBound] The relative upper bounds of Fortran data array to be used later in `ESMF_FieldCreate` from `ESMF_Mesh` and Fortran data array. This is an output variable from this user interface.

[totalCount] Number of elements need to be allocated for Fortran data array to be used later in `ESMF_FieldCreate` from `ESMF_Mesh` and Fortran data array. This is an output variable from this user interface.

[rc] Return code; equals `ESMF_SUCCESS` if there are no errors.

27.7.4 ESMF_XGridGetFieldBounds - Get precomputed DE-local Fortran data array bounds for creating a Field from an XGrid and a Fortran array

INTERFACE:

```
subroutine ESMF_XGridGetFieldBounds(xgrid, &
    xgridside, gridindex, localDe, gridToFieldMap, &
    ungriddedLBound, ungriddedUBound, &
    totalLBound, totalUBound, totalCount, rc)
```

ARGUMENTS:

```
    type(ESMF_XGrid),          intent(in)            :: xgrid
-- The following arguments require argument keyword syntax (e.g. rc=rc). --
    type(ESMF_XGridSide_Flag), intent(in),  optional :: xgridside
    integer,                   intent(in),  optional :: gridindex
    integer,                   intent(in),  optional :: localDe
    integer,                   intent(in),  optional :: gridToFieldMap(:)
    integer,                   intent(in),  optional :: ungriddedLBound(:)
    integer,                   intent(in),  optional :: ungriddedUBound(:)
    integer,                   intent(out), optional :: totalLBound(:)
    integer,                   intent(out), optional :: totalUBound(:)
    integer,                   intent(out), optional :: totalCount(:)
    integer,                   intent(out), optional :: rc
```

DESCRIPTION:

Compute the lower and upper bounds of Fortran data array that can later be used in FieldCreate interface to create a `ESMF_Field` from a `ESMF_XGrid` and the Fortran data array. For an example and associated documentation using this method see section 27.3.9.

The arguments are:

xgrid `ESMF_XGrid` object.

[xgridside] Which side of the XGrid to create the Field on (either ESMF_XGRIDSIDE_A, ESMF_XGRIDSIDE_B, or ESMF_XGRIDSIDE_BALANCED). If not passed in then defaults to ESMF_XGRIDSIDE_BALANCED.

[gridindex] If xgridside is ESMF_XGRIDSIDE_A or ESMF_XGRIDSIDE_B then this index tells which Grid on that side to create the Field on. If not provided, defaults to 1.

[localDe] Local DE for which information is requested. `[0,..,localDeCount-1]`. For `localDeCount==1` the `localDe` argument may be omitted, in which case it will default to `localDe=0`.

[gridToFieldMap] List with number of elements equal to 1. The list elements map the dimension of the `locstream` to a dimension in the `field` by specifying the appropriate `field` dimension index. The default is to map the `locstream`ls dimension against the lowest dimension of the `field` in sequence, i.e. `gridToFieldMap` = (/1/). The values of all `gridToFieldMap` entries must be greater than or equal to one and smaller than or equal to the `field` rank. The total ungridded dimensions in the `field` are the total `field` dimensions less the dimensions in the `grid`. Ungridded dimensions must be in the same order they are stored in the field.

[ungriddedLBound] Lower bounds of the ungridded dimensions of the `field`. The number of elements in the `ungriddedLBound` is equal to the number of ungridded dimensions in the `field`. All ungridded dimensions of the `field` are also undistributed. When field dimension count is greater than 1, both ungriddedLBound and ungriddedUBound must be specified. When both are specified the values are checked for consistency. Note that the the ordering of these ungridded dimensions is the same as their order in the `field`.

[ungriddedUBound] Upper bounds of the ungridded dimensions of the `field`. The number of elements in the `ungriddedUBound` is equal to the number of ungridded dimensions in the `field`. All ungridded dimensions of the `field` are also undistributed. When field dimension count is greater than 1, both ungriddedLBound and ungriddedUBound must be specified. When both are specified the values are checked for consistency. Note that the the ordering of these ungridded dimensions is the same as their order in the `field`.

[totalLBound] The relative lower bounds of Fortran data array to be used later in `ESMF_FieldCreate` from `ESMF_LocStream` and Fortran data array. This is an output variable from this user interface.

[totalUBound] The relative upper bounds of Fortran data array to be used later in `ESMF_FieldCreate` from `ESMF_LocStream` and Fortran data array. This is an output variable from this user interface.

[totalCount] Number of elements need to be allocated for Fortran data array to be used later in `ESMF_FieldCreate` from `ESMF_LocStream` and Fortran data array. This is an output variable from this user interface.

[rc] Return code; equals `ESMF_SUCCESS` if there are no errors.

28 ArrayBundle Class

28.1 Description

The `ESMF_ArrayBundle` class allows a set of Arrays to be bundled into a single object. The Arrays in an ArrayBundle may be of different type, kind, rank and distribution. Besides ease of use resulting from bundling, the ArrayBundle class offers the opportunity for performance optimization when operating on a bundle of Arrays as a single entity. Communication methods are especially good candidates for performance optimization. Best optimization results are expected for ArrayBundles that contain Arrays that share a common distribution, i.e. DistGrid, and are of same type, kind and rank.

ArrayBundles are one of the data objects that can be added to States, which are used for providing to or receiving data from other Components.

28.2 Use and Examples

Examples of creating, destroying and accessing ArrayBundles and their constituent Arrays are provided in this section, along with some notes on ArrayBundle methods.

28.2.1 Creating an ArrayBundle from a list of Arrays

An ArrayBundle is created from a list of `ESMF_Array` objects.

```
call ESMF_ArraySpecSet(arrayspec, typekind=ESMF_TYPEKIND_R8, rank=2, rc=rc)

distgrid = ESMF_DistGridCreate(minIndex=(/1,1/), maxIndex=(/5,5/), &
  regDecomp=(/2,3/), rc=rc)

allocate(arrayList(2))
arrayList(1) = ESMF_ArrayCreate(arrayspec=arrayspec, distgrid=distgrid, &
               rc=rc)

arrayList(2) = ESMF_ArrayCreate(arrayspec=arrayspec, distgrid=distgrid, &
               rc=rc)
```

Now `arrayList` is used to create an ArrayBundle object.

```
arraybundle = ESMF_ArrayBundleCreate(arrayList=arrayList, &
  name="MyArrayBundle", rc=rc)
```

Here the temporary `arrayList` can be deallocated. This will not affect the ESMF Array objects inside the ArrayBundle. However, the Array objects must not be deallocated while the ArrayBundle references them.

```
deallocate(arrayList)
```

28.2.2 Adding, removing, replacing Arrays in the ArrayBundle

Individual Arrays can be added using the Fortran array constructor syntax `(/ ... /)`. Here an ESMF_Array is created on the fly and immediately added to the ArrayBundle.

```
call ESMF_ArrayBundleAdd(arraybundle, arrayList=(/ &
  ESMF_ArrayCreate(arrayspec=arrayspec, distgrid=distgrid, name="AonFly")/), &
  rc=rc)
```

Items in the ArrayBundle can be replaced by items with the same name.

```
call ESMF_ArraySpecSet(arrayspec2, typekind=ESMF_TYPEKIND_R4, rank=2, rc=rc)

call ESMF_ArrayBundleReplace(arraybundle, arrayList=(/ &
  ESMF_ArrayCreate(arrayspec=arrayspec2, distgrid=distgrid, name="AonFly")/), &
  rc=rc)
```

Items can be removed from the ArrayBundle by providing their name.

```
call ESMF_ArrayBundleRemove(arraybundle, arrayNameList=(/"AonFly"/), rc=rc)
```

The ArrayBundle AddReplace() method can be used to conveniently add an item to the ArrayBundle, or replacing an existing item of the same name.

```
call ESMF_ArrayBundleAddReplace(arraybundle, arrayList=(/ &
  ESMF_ArrayCreate(arrayspec=arrayspec2, distgrid=distgrid, name="AonFly")/), &
  rc=rc)
```

The ArrayBundle object can be printed at any time to list its contents by name.

```
call ESMF_ArrayBundlePrint(arraybundle, rc=rc)
```

28.2.3 Accessing Arrays inside the ArrayBundle

Individual items in the ArrayBundle can be accessed directly by their name.

```
call ESMF_ArrayBundleGet(arraybundle, arrayName="AonFly", array=arrayOut, &
  rc=rc)
```

A list containing all of the Arrays in the ArrayBundle can also be requested in a single call. This requires that a large enough list argument is passed into the `ESMF_ArrayBundleGet()` method. The exact number of items in the ArrayBundle can be queried using the `arrayCount` argument first.

```
call ESMF_ArrayBundleGet(arraybundle, arrayCount=arrayCount, rc=rc)
```

Then use `arrayCount` to correctly allocate the `arrayList` variable for a second call to `ESMF_ArrayBundleGet()`.

```
allocate(arrayList(arrayCount))
call ESMF_ArrayBundleGet(arraybundle, arrayList=arrayList, rc=rc)
```

Now the `arrayList` variable can be used to access the individual Arrays, e.g. to print them.

```
do i=1, arrayCount
  call ESMF_ArrayPrint(arrayList(i), rc=rc)
  if (rc /= ESMF_SUCCESS) call ESMF_Finalize(endflag=ESMF_END_ABORT)
enddo
```

By default the `arrayList` returned by `ESMF_ArrayBundleGet()` contains the items in alphabetical order. To instead return the items in the same order in which they were added to the ArrayBundle, the `itemorderflag` argument is passed with a value of `ESMF_ITEMORDER_ADDORDER`.

```
call ESMF_ArrayBundleGet(arraybundle, arrayList=arrayList, &
  itemorderflag=ESMF_ITEMORDER_ADDORDER, rc=rc)
```

28.2.4 Destroying an ArrayBundle and its constituents

Destroying an ArrayBundle does not destroy the Arrays. In fact, it leaves the Arrays totally unchanged.

```
call ESMF_ArrayBundleDestroy(arraybundle, rc=rc)
```

The Arrays must be destroyed separately.

```
call ESMF_ArrayDestroy(arrayList(1), rc=rc)

call ESMF_ArrayDestroy(arrayList(2), rc=rc)

deallocate(arrayList)

call ESMF_DistGridDestroy(distgrid, rc=rc)
```

28.2.5 Halo communication

One of the most fundamental communication pattern in domain decomposition codes is the *halo* operation. The ESMF Array class supports halos by allowing memory for extra elements to be allocated on each DE. See section 29.2.15 for a discussion of the Array level halo operation. The ArrayBundle level extents the Array halo operation to bundles of Arrays.

First create an `ESMF_ArrayBundle` object containing a set of ESMF Arrays.

```
arraybundle = ESMF_ArrayBundleCreate(arrayList=arrayList, &
  name="MyArrayBundle", rc=rc)
```

The ArrayBundle object can be treated as a single entity. The `ESMF_ArrayBundleHaloStore()` call determines the most efficient halo exchange pattern for *all* Arrays that are part of `arraybundle`.

```
call ESMF_ArrayBundleHaloStore(arraybundle=arraybundle, &
  routehandle=haloHandle, rc=rc)
```

The halo exchange pattern stored in `haloHandle` can now be applied to the `arraybundle` object, or any other ArrayBundle that is compatible to the one used during the `ESMF_ArrayBundleHaloStore()` call.

```
call ESMF_ArrayBundleHalo(arraybundle=arraybundle, routehandle=haloHandle, &
  rc=rc)
```

Finally, when no longer needed, the resources held by `haloHandle` need to be returned to the system by calling `ESMF_ArrayBundleHaloRelease()`.

```
call ESMF_ArrayBundleHaloRelease(routehandle=haloHandle, rc=rc)
```

Finally the ArrayBundle object can be destroyed.

```
call ESMF_ArrayBundleDestroy(arraybundle, rc=rc)
```

28.3 Restrictions and Future Work

- **Non-blocking** ArrayBundle communications option is not yet implemented. In the future this functionality will be provided via the `routesyncflag` option.

28.4 Design and Implementation Notes

The following is a list of implementation specific details about the current ESMF ArrayBundle.

- Implementation language is C++.
- All precomputed communication methods are based on sparse matrix multiplication.

28.5 Class API

28.5.1 ESMF_ArrayBundleAssignment(=) - ArrayBundle assignment

INTERFACE:

```
interface assignment(=)
arraybundle1 = arraybundle2
```

ARGUMENTS:

```
type(ESMF_ArrayBundle) :: arraybundle1
type(ESMF_ArrayBundle) :: arraybundle2
```

STATUS:

- This interface is backward compatible with ESMF versions starting at 5.2.0r. If code using this interface compiles with any version of ESMF starting with 5.2.0r, then it will compile with the current version.

DESCRIPTION:

Assign arraybundle1 as an alias to the same ESMF ArrayBundle object in memory as arraybundle2. If arraybundle2 is invalid, then arraybundle1 will be equally invalid after the assignment.

The arguments are:

arraybundle1 The `ESMF_ArrayBundle` object on the left hand side of the assignment.

arraybundle2 The `ESMF_ArrayBundle` object on the right hand side of the assignment.

28.5.2 ESMF_ArrayBundleOperator(==) - ArrayBundle equality operator

INTERFACE:

```
interface operator(==)
  if (arraybundle1 == arraybundle2) then ... endif
            OR
  result = (arraybundle1 == arraybundle2)
```

RETURN VALUE:

```
logical :: result
```

ARGUMENTS:

```
type(ESMF_ArrayBundle), intent(in) :: arraybundle1
type(ESMF_ArrayBundle), intent(in) :: arraybundle2
```

STATUS:

- This interface is backward compatible with ESMF versions starting at 5.2.0r. If code using this interface compiles with any version of ESMF starting with 5.2.0r, then it will compile with the current version.

DESCRIPTION:

Test whether arraybundle1 and arraybundle2 are valid aliases to the same ESMF ArrayBundle object in memory. For a more general comparison of two ESMF ArrayBundles, going beyond the simple alias test, the ESMF_ArrayBundleMatch() function (not yet implemented) must be used.

The arguments are:

arraybundle1 The `ESMF_ArrayBundle` object on the left hand side of the equality operation.

arraybundle2 The `ESMF_ArrayBundle` object on the right hand side of the equality operation.

28.5.3 ESMF_ArrayBundleOperator(/=) - ArrayBundle not equal operator

INTERFACE:

```
interface operator(/=)
  if (arraybundle1 /= arraybundle2) then ... endif
            OR
  result = (arraybundle1 /= arraybundle2)
```

RETURN VALUE:

```
logical :: result
```

ARGUMENTS:

```
type(ESMF_ArrayBundle), intent(in) :: arraybundle1
type(ESMF_ArrayBundle), intent(in) :: arraybundle2
```

STATUS:

- This interface is backward compatible with ESMF versions starting at 5.2.0r. If code using this interface compiles with any version of ESMF starting with 5.2.0r, then it will compile with the current version.

DESCRIPTION:

Test whether arraybundle1 and arraybundle2 are *not* valid aliases to the same ESMF ArrayBundle object in memory. For a more general comparison of two ESMF ArrayBundles, going beyond the simple alias test, the ESMF_ArrayBundleMatch() function (not yet implemented) must be used.

The arguments are:

arraybundle1 The `ESMF_ArrayBundle` object on the left hand side of the non-equality operation.

arraybundle2 The `ESMF_ArrayBundle` object on the right hand side of the non-equality operation.

28.5.4 ESMF_ArrayBundleAdd - Add Arrays to an ArrayBundle

INTERFACE:

```
subroutine ESMF_ArrayBundleAdd(arraybundle, arrayList, &
  multiflag, relaxedflag, rc)
```

ARGUMENTS:

```
     type(ESMF_ArrayBundle), intent(inout)         :: arraybundle
     type(ESMF_Array),       intent(in)            :: arrayList(:)
 -- The following arguments require argument keyword syntax (e.g. rc=rc). --
     logical,                intent(in),  optional :: multiflag
     logical,                intent(in),  optional :: relaxedflag
     integer,                intent(out), optional :: rc
```

STATUS:

- This interface is backward compatible with ESMF versions starting at 5.2.0r. If code using this interface compiles with any version of ESMF starting with 5.2.0r, then it will compile with the current version.

DESCRIPTION:

Add Array(s) to an ArrayBundle. It is an error if `arrayList` contains Arrays that match by name Arrays already contained in `arraybundle`.

arraybundle `ESMF_ArrayBundle` to be added to.

arrayList List of `ESMF_Array` objects to be added.

[multiflag] A setting of `.true.` allows multiple items with the same name to be added to `arraybundle`. For `.false.` added items must have unique names. The default setting is `.false.`.

[relaxedflag] A setting of `.true.` indicates a relaxed definition of "add" under `multiflag=.false.` mode, where it is *not* an error if `arrayList` contains items with names that are also found in `arraybundle`. The `arraybundle` is left unchanged for these items. For `.false.` this is treated as an error condition. The default setting is `.false.`.

[rc] Return code; equals `ESMF_SUCCESS` if there are no errors.

28.5.5 ESMF_ArrayBundleAddReplace - Conditionally add or replace Arrays in an ArrayBundle

INTERFACE:

```
     subroutine ESMF_ArrayBundleAddReplace(arraybundle, arrayList, rc)
```

ARGUMENTS:

```
     type(ESMF_ArrayBundle), intent(inout)         :: arraybundle
     type(ESMF_Array),       intent(in)            :: arrayList(:)
 -- The following arguments require argument keyword syntax (e.g. rc=rc). --
     integer,                intent(out), optional :: rc
```

STATUS:

- This interface is backward compatible with ESMF versions starting at 5.2.0r. If code using this interface compiles with any version of ESMF starting with 5.2.0r, then it will compile with the current version.

DESCRIPTION:

Arrays in `arrayList` that do not match any Arrays by name in `arraybundle` are added to the ArrayBundle. Arrays in `arraybundle` that match by name Arrays in `arrayList` are replaced by those Arrays.

arraybundle `ESMF_ArrayBundle` to be manipulated.

arrayList List of `ESMF_Array` objects to be added or used as replacement.

[rc] Return code; equals `ESMF_SUCCESS` if there are no errors.

28.5.6 ESMF_ArrayBundleCreate - Create an ArrayBundle from a list of Arrays

INTERFACE:

```
function ESMF_ArrayBundleCreate(arrayList, multiflag, &
  relaxedflag, name, rc)
```

RETURN VALUE:

```
type(ESMF_ArrayBundle) :: ESMF_ArrayBundleCreate
```

ARGUMENTS:

```
-- The following arguments require argument keyword syntax (e.g. rc=rc). --
    type(ESMF_Array), intent(in),  optional :: arrayList(:)
    logical,          intent(in),  optional :: multiflag
    logical,          intent(in),  optional :: relaxedflag
    character(len=*), intent(in),  optional :: name
    integer,          intent(out), optional :: rc
```

STATUS:

- This interface is backward compatible with ESMF versions starting at 5.2.0r. If code using this interface compiles with any version of ESMF starting with 5.2.0r, then it will compile with the current version.

DESCRIPTION:

Create an `ESMF_ArrayBundle` object from a list of existing Arrays.

The creation of an ArrayBundle leaves the bundled Arrays unchanged, they remain valid individual objects. An ArrayBundle is a light weight container of Array references. The actual data remains in place, there are no data movements or duplications associated with the creation of an ArrayBundle.

[arrayList] List of `ESMF_Array` objects to be bundled.

[multiflag] A setting of `.true.` allows multiple items with the same name to be added to `arraybundle`. For `.false.` added items must have unique names. The default setting is `.false.`.

[relaxedflag] A setting of `.true.` indicates a relaxed definition of "add" under `multiflag=.false.` mode, where it is *not* an error if `arrayList` contains items with names that are also found in `arraybundle`. The `arraybundle` is left unchanged for these items. For `.false.` this is treated as an error condition. The default setting is `.false.`.

[name] Name of the created `ESMF_ArrayBundle`. A default name is generated if not specified.

[rc] Return code; equals `ESMF_SUCCESS` if there are no errors.

28.5.7 ESMF_ArrayBundleDestroy - Release resources associated with an ArrayBundle

INTERFACE:

```
subroutine ESMF_ArrayBundleDestroy(arraybundle, noGarbage, rc)
```

ARGUMENTS:

```
     type(ESMF_ArrayBundle), intent(inout)           :: arraybundle
 -- The following arguments require argument keyword syntax (e.g. rc=rc). --
     logical,                intent(in),   optional  :: noGarbage
     integer,                intent(out),  optional  :: rc
```

STATUS:

- This interface is backward compatible with ESMF versions starting at 5.2.0r. If code using this interface compiles with any version of ESMF starting with 5.2.0r, then it will compile with the current version.
- This interface was modified since ESMF version 5.2.0r. The fact that code using this interface compiles with the current ESMF version does not guarantee that it compiles with previous versions of this interface. If user code compatibility with version 5.2.0r is desired then care must be taken to limit the use of this interface to features that were available in the 5.2.0r release.
  Changes made after the 5.2.0r release:

  7.0.0 Added argument `noGarbage`. The argument provides a mechanism to override the default garbage collection mechanism when destroying an ESMF object.

DESCRIPTION:

Destroys an `ESMF_ArrayBundle` object. The member Arrays are not touched by this operation and remain valid objects that need to be destroyed individually if necessary.

By default a small remnant of the object is kept in memory in order to prevent problems with dangling aliases. The default garbage collection mechanism can be overridden with the `noGarbage` argument.

The arguments are:

arraybundle `ESMF_ArrayBundle` object to be destroyed.

[noGarbage] If set to `.TRUE.` the object will be fully destroyed and removed from the ESMF garbage collection system. Note however that under this condition ESMF cannot protect against accessing the destroyed object through dangling aliases – a situation which may lead to hard to debug application crashes.

It is generally recommended to leave the `noGarbage` argument set to `.FALSE.` (the default), and to take advantage of the ESMF garbage collection system which will prevent problems with dangling aliases or incorrect sequences of destroy calls. However this level of support requires that a small remnant of the object is kept in memory past the destroy call. This can lead to an unexpected increase in memory consumption over the course of execution in applications that use temporary ESMF objects. For situations where the repeated creation and destruction of temporary objects leads to memory issues, it is recommended to call with `noGarbage` set to `.TRUE.`, fully removing the entire temporary object from memory.

[rc] Return code; equals `ESMF_SUCCESS` if there are no errors.

28.5.8 ESMF_ArrayBundleGet - Get object-wide information from an ArrayBundle

INTERFACE:

```
! Private name; call using ESMF_ArrayBundleGet()
subroutine ESMF_ArrayBundleGetListAll(arraybundle, &
  itemorderflag, arrayCount, arrayList, arrayNameList, name, vm, rc)
```

ARGUMENTS:

```
 type(ESMF_ArrayBundle),    intent(in)            :: arraybundle
-- The following arguments require argument keyword syntax (e.g. rc=rc). --
 type(ESMF_ItemOrder_Flag), intent(in),  optional :: itemorderflag
 integer,                   intent(out), optional :: arrayCount
 type(ESMF_Array),          intent(out), optional :: arrayList(:)
 character(len=*),          intent(out), optional :: arrayNameList(:)
 character(len=*),          intent(out), optional :: name
 type(ESMF_VM),             intent(out), optional :: vm
 integer,                   intent(out), optional :: rc
```

STATUS:

- This interface is backward compatible with ESMF versions starting at 5.2.0r. If code using this interface compiles with any version of ESMF starting with 5.2.0r, then it will compile with the current version.
- This interface was modified since ESMF version 5.2.0r. The fact that code using this interface compiles with the current ESMF version does not guarantee that it compiles with previous versions of this interface. If user code compatibility with version 5.2.0r is desired then care must be taken to limit the use of this interface to features that were available in the 5.2.0r release.
  Changes made after the 5.2.0r release:

  6.1.0 Added argument `itemorderflag`. The new argument gives the user control over the order in which the items are returned.

  8.8.0 Added argument `vm` in order to offer information about the VM on which the ArrayBundle was created.

DESCRIPTION:

Get general, i.e. not Array name specific information from the ArrayBundle.

arraybundle `ESMF_ArrayBundle` to be queried.

[itemorderflag] Specifies the order of the returned items in the `arrayList` and `arrayNameList`. The default is `ESMF_ITEMORDER_ABC`. See 55.34 for a full list of options.

[arrayCount] Upon return holds the number of Arrays bundled in the ArrayBundle.

[arrayList] Upon return holds a list of Arrays bundled in `arraybundle`. The argument must be allocated to be at least of size `arrayCount`.

[arrayNameList] Upon return holds a list of the names of the Arrays bundled in `arraybundle`. The argument must be allocated to be at least of size `arrayCount`.

[name] Name of the ArrayBundle object.

[vm The VM on which the ArrayBundle object was created.

[rc] Return code; equals `ESMF_SUCCESS` if there are no errors.

28.5.9 ESMF_ArrayBundleGet - Get information about an Array by name and optionally return an Array

INTERFACE:

```
! Private name; call using ESMF_ArrayBundleGet()
subroutine ESMF_ArrayBundleGetItem(arraybundle, arrayName, &
  array, arrayCount, isPresent, rc)
```

ARGUMENTS:

```
    type(ESMF_ArrayBundle), intent(in)            :: arraybundle
    character(len=*),       intent(in)            :: arrayName
-- The following arguments require argument keyword syntax (e.g. rc=rc). --
    type(ESMF_Array),       intent(out), optional :: array
    integer,                intent(out), optional :: arrayCount
    logical,                intent(out), optional :: isPresent
    integer,                intent(out), optional :: rc
```

STATUS:

- This interface is backward compatible with ESMF versions starting at 5.2.0r. If code using this interface compiles with any version of ESMF starting with 5.2.0r, then it will compile with the current version.

DESCRIPTION:

Get information about items that match `arrayName` in ArrayBundle.

arraybundle `ESMF_ArrayBundle` to be queried.

arrayName Specified name.

[array] Upon return holds the requested Array item. It is an error if this argument was specified and there is not exactly one Array item in `arraybundle` that matches `arrayName`.

[arrayCount] Number of Arrays with `arrayName` in `arraybundle`.

[isPresent] Upon return indicates whether Array(s) with `arrayName` exist in `arraybundle`.

[rc] Return code; equals `ESMF_SUCCESS` if there are no errors.

28.5.10 ESMF_ArrayBundleGet - Get a list of Arrays by name

INTERFACE:

```
! Private name; call using ESMF_ArrayBundleGet()
subroutine ESMF_ArrayBundleGetList(arraybundle, arrayName, arrayList, &
  itemorderflag, rc)
```

ARGUMENTS:

```
     type(ESMF_ArrayBundle),    intent(in)            :: arraybundle
     character(len=*),          intent(in)            :: arrayName
     type(ESMF_Array),          intent(out)           :: arrayList(:)
 -- The following arguments require argument keyword syntax (e.g. rc=rc). --
     type(ESMF_ItemOrder_Flag), intent(in),  optional :: itemorderflag
     integer,                   intent(out), optional :: rc
```

STATUS:

- This interface is backward compatible with ESMF versions starting at 5.2.0r. If code using this interface compiles with any version of ESMF starting with 5.2.0r, then it will compile with the current version.
- This interface was modified since ESMF version 5.2.0r. The fact that code using this interface compiles with the current ESMF version does not guarantee that it compiles with previous versions of this interface. If user code compatibility with version 5.2.0r is desired then care must be taken to limit the use of this interface to features that were available in the 5.2.0r release.
  Changes made after the 5.2.0r release:

  6.1.0 Added argument `itemorderflag`. The new argument gives the user control over the order in which the items are returned.

DESCRIPTION:

Get the list of Arrays from ArrayBundle that match `arrayName`.

arraybundle `ESMF_ArrayBundle` to be queried.

arrayName Specified name.

arrayList List of Arrays in `arraybundle` that match `arrayName`. The argument must be allocated to be at least of size `arrayCount` returned for this `arrayName`.

[itemorderflag] Specifies the order of the returned items in the `arrayList`. The default is `ESMF_ITEMORDER_ABC`. See 55.34 for a full list of options.

[rc] Return code; equals `ESMF_SUCCESS` if there are no errors.

28.5.11 ESMF_ArrayBundleHalo - Execute an ArrayBundle halo operation

INTERFACE:

```
subroutine ESMF_ArrayBundleHalo(arraybundle, routehandle, &
  checkflag, rc)
```

ARGUMENTS:

```
  type(ESMF_ArrayBundle), intent(inout)          :: arraybundle
  type(ESMF_RouteHandle), intent(inout)          :: routehandle
-- The following arguments require argument keyword syntax (e.g. rc=rc). --
  logical,                intent(in),   optional :: checkflag
  integer,                intent(out),  optional :: rc
```

STATUS:

- This interface is backward compatible with ESMF versions starting at 5.2.0r. If code using this interface compiles with any version of ESMF starting with 5.2.0r, then it will compile with the current version.

DESCRIPTION:

Execute a precomputed ArrayBundle halo operation for the Arrays in `arrayBundle`.

See `ESMF_ArrayBundleHaloStore()` on how to precompute `routehandle`.

This call is *collective* across the current VM.

arraybundle `ESMF_ArrayBundle` containing data to be haloed.

routehandle Handle to the precomputed Route.

[checkflag] If set to `.TRUE.` the input Array pairs will be checked for consistency with the precomputed operation provided by `routehandle`. If set to `.FALSE.` *(default)* only a very basic input check will be performed, leaving many inconsistencies undetected. Set `checkflag` to `.FALSE.` to achieve highest performance.

[rc] Return code; equals `ESMF_SUCCESS` if there are no errors.

28.5.12 ESMF_ArrayBundleHaloRelease - Release resources associated with an ArrayBundle halo operation

INTERFACE:

```
subroutine ESMF_ArrayBundleHaloRelease(routehandle, &
  noGarbage, rc)
```

ARGUMENTS:

```
    type(ESMF_RouteHandle), intent(inout)          :: routehandle
-- The following arguments require argument keyword syntax (e.g. rc=rc). --
    logical,                intent(in),   optional :: noGarbage
    integer,                intent(out),  optional :: rc
```

STATUS:

- This interface is backward compatible with ESMF versions starting at 5.2.0r. If code using this interface compiles with any version of ESMF starting with 5.2.0r, then it will compile with the current version.
- This interface was modified since ESMF version 5.2.0r. The fact that code using this interface compiles with the current ESMF version does not guarantee that it compiles with previous versions of this interface. If user code compatibility with version 5.2.0r is desired then care must be taken to limit the use of this interface to features that were available in the 5.2.0r release.
  Changes made after the 5.2.0r release:

  8.0.0 Added argument `noGarbage`. The argument provides a mechanism to override the default garbage collection mechanism when destroying an ESMF object.

DESCRIPTION:

Release resources associated with an ArrayBundle halo operation. After this call `routehandle` becomes invalid.

routehandle Handle to the precomputed Route.

[noGarbage] If set to `.TRUE.` the object will be fully destroyed and removed from the ESMF garbage collection system. Note however that under this condition ESMF cannot protect against accessing the destroyed object through dangling aliases – a situation which may lead to hard to debug application crashes.

It is generally recommended to leave the `noGarbage` argument set to `.FALSE.` (the default), and to take advantage of the ESMF garbage collection system which will prevent problems with dangling aliases or incorrect sequences of destroy calls. However this level of support requires that a small remnant of the object is kept in memory past the destroy call. This can lead to an unexpected increase in memory consumption over the course of execution in applications that use temporary ESMF objects. For situations where the repeated creation and destruction of temporary objects leads to memory issues, it is recommended to call with `noGarbage` set to `.TRUE.`, fully removing the entire temporary object from memory.

[rc] Return code; equals `ESMF_SUCCESS` if there are no errors.

28.5.13 ESMF_ArrayBundleHaloStore - Precompute an ArrayBundle halo operation

INTERFACE:

```
subroutine ESMF_ArrayBundleHaloStore(arraybundle, routehandle, &
  startregion, haloLDepth, haloUDepth, rc)
```

ARGUMENTS:

```
    type(ESMF_ArrayBundle),     intent(inout)         :: arraybundle
    type(ESMF_RouteHandle),     intent(inout)         :: routehandle
-- The following arguments require argument keyword syntax (e.g. rc=rc). --
    type(ESMF_StartRegion_Flag),intent(in),  optional :: startregion
    integer,                    intent(in),  optional :: haloLDepth(:)
    integer,                    intent(in),  optional :: haloUDepth(:)
    integer,                    intent(out), optional :: rc
```

STATUS:

- This interface is backward compatible with ESMF versions starting at 5.2.0r. If code using this interface compiles with any version of ESMF starting with 5.2.0r, then it will compile with the current version.

DESCRIPTION:

Store an ArrayBundle halo operation over the data in `arraybundle`. By default, i.e. without specifying `startregion`, `haloLDepth` and `haloUDepth`, all elements in the total Array regions that lie outside the exclusive regions will be considered potential destination elements for the halo operation. However, only those elements that have a corresponding halo source element, i.e. an exclusive element on one of the DEs, will be updated under the halo operation. Elements that have no associated source remain unchanged under halo.

Specifying `startregion` allows to change the shape of the effective halo region from the inside. Setting this flag to `ESMF_STARTREGION_COMPUTATIONAL` means that only elements outside the computational region for each Array are considered for potential destination elements for the halo operation. The default is `ESMF_STARTREGION_EXCLUSIVE`.

The `haloLDepth` and `haloUDepth` arguments allow to reduce the extent of the effective halo region. Starting at the region specified by `startregion`, the `haloLDepth` and `haloUDepth` define a halo depth in each direction. Note that the maximum halo region is limited by the total region for each Array, independent of the actual `haloLDepth` and `haloUDepth` setting. The total Array regions are local DE specific. The `haloLDepth` and `haloUDepth` are interpreted as the maximum desired extent, reducing the potentially larger region available for the halo operation.

The routine returns an `ESMF_RouteHandle` that can be used to call `ESMF_ArrayBundleHalo()` on any pair of ArrayBundles that matches `srcArrayBundle` and `dstArrayBundle` in *type*, *kind*, and memory layout of the *distributed* dimensions. However, the size, number, and index order of *undistributed* dimensions may be different. See section 38.2.5 for a more detailed discussion of RouteHandle reusability.

This call is *collective* across the current VM.

arraybundle `ESMF_ArrayBundle` containing data to be haloed. The data in the halo regions may be destroyed by this call.

routehandle Handle to the precomputed Route.

[startregion] The start of the effective halo region on every DE. The default setting is `ESMF_STARTREGION_EXCLUSIVE`, rendering all non-exclusive elements potential halo destination elements. See section 55.56 for a complete list of valid settings.

[haloLDepth] This vector specifies the lower corner of the effective halo region with respect to the lower corner of `startregion`. The size of `haloLDepth` must equal the number of distributed Array dimensions.

[haloUDepth] This vector specifies the upper corner of the effective halo region with respect to the upper corner of `startregion`. The size of `haloUDepth` must equal the number of distributed Array dimensions.

[rc] Return code; equals `ESMF_SUCCESS` if there are no errors.

28.5.14 ESMF_ArrayBundleIsCreated - Check whether an ArrayBundle object has been created

INTERFACE:

```
function ESMF_ArrayBundleIsCreated(arraybundle, rc)
```

RETURN VALUE:

```
logical :: ESMF_ArrayBundleIsCreated
```

ARGUMENTS:

```
     type(ESMF_ArrayBundle), intent(in)            :: arraybundle
 -- The following arguments require argument keyword syntax (e.g. rc=rc). --
     integer,                intent(out), optional :: rc
```

DESCRIPTION:

Return `.true.` if the `arraybundle` has been created. Otherwise return `.false.`. If an error occurs, i.e. `rc /= ESMF_SUCCESS` is returned, the return value of the function will also be `.false.`.

The arguments are:

arraybundle `ESMF_ArrayBundle` queried.

[rc] Return code; equals `ESMF_SUCCESS` if there are no errors.

28.5.15 ESMF_ArrayBundleLog - Log ArrayBundle information

INTERFACE:

```
subroutine ESMF_ArrayBundleLog(arraybundle, prefix, logMsgFlag, deepFlag, rc)
```

ARGUMENTS:

```
     type(ESMF_ArrayBundle), intent(in)              :: arraybundle
 -- The following arguments require argument keyword syntax (e.g. rc=rc). --
     character(len=*),       intent(in),   optional  :: prefix
     type(ESMF_LogMsg_Flag), intent(in),   optional  :: logMsgFlag
     logical,                intent(in),   optional  :: deepFlag
     integer, intent(out),                 optional  :: rc
```

DESCRIPTION:

Write information about `arraybundle` to the ESMF default Log.

The arguments are:

arraybundle `ESMF_ArrayBundle` object logged.

[prefix] String to prefix the log message. Default is no prefix.

[logMsgFlag] Type of log message generated. See section 50.2.3 for a list of valid message types. Default is `ESMF_LOGMSG_INFO`.

[deepFlag] When set to `.false.` (default), only log top level information for each item contained in the ArrayBundle. When set to `.true.`, additionally log information for each item.

[rc] Return code; equals `ESMF_SUCCESS` if there are no errors.

28.5.16 ESMF_ArrayBundlePrint - Print ArrayBundle information

INTERFACE:

```
subroutine ESMF_ArrayBundlePrint(arraybundle, rc)
```

ARGUMENTS:

```
     type(ESMF_ArrayBundle), intent(in)            :: arraybundle
 -- The following arguments require argument keyword syntax (e.g. rc=rc). --
     integer,                intent(out), optional :: rc
```

STATUS:

- This interface is backward compatible with ESMF versions starting at 5.2.0r. If code using this interface compiles with any version of ESMF starting with 5.2.0r, then it will compile with the current version.

DESCRIPTION:

Print internal information of the specified `ESMF_ArrayBundle` object to `stdout`.

The arguments are:

arraybundle `ESMF_ArrayBundle` object.

[rc] Return code; equals `ESMF_SUCCESS` if there are no errors.

28.5.17 ESMF_ArrayBundleRead - Read Arrays to an ArrayBundle from file(s)

INTERFACE:

```
subroutine ESMF_ArrayBundleRead(arraybundle, fileName, &
  singleFile, timeslice, iofmt, rc)
```

ARGUMENTS:

```
     type(ESMF_ArrayBundle), intent(inout)          :: arraybundle
     character(*),           intent(in)             :: fileName
 -- The following arguments require argument keyword syntax (e.g. rc=rc). --
     logical,                intent(in),  optional  :: singleFile
     integer,                intent(in),  optional  :: timeslice
     type(ESMF_IOFmt_Flag),  intent(in),  optional  :: iofmt
     integer,                intent(out), optional  :: rc
```

DESCRIPTION:

Read Array data to an ArrayBundle object from file(s). For this API to be functional, the environment variable `ESMF_PIO` should be set to either "internal" or "external" when the ESMF library is built. Please see the section on Data I/O, 39.2.

Limitations:

- For multi-tile Arrays, all Arrays in the ArrayBundle must contain the same number of tiles.

The arguments are:

arraybundle An `ESMF_ArrayBundle` object.

fileName The name of the file from which ArrayBundle data is read. If the ArrayBundle contains multi-tile Arrays, then fileName must contain exactly one instance of "*"; this is a placeholder that will be replaced by the tile number, with each tile being read from a separate file. (For example, for a fileName of "myfile*.nc", tile 1 will be read from "myfile1.nc", tile 2 from "myfile2.nc", etc.) (This handling of the fileName for multi-tile I/O is subject to change.)

[singleFile] A logical flag, the default is .true., i.e., all Arrays in the bundle are stored in one single file. If .false., each Array is stored in separate files; these files are numbered with the name based on the argument "file". That is, a set of files are named: [file_name]001, [file_name]002, [file_name]003,...

[timeslice] The time-slice number of the variable read from file.

[iofmt] The I/O format. Please see Section 55.30 for the list of options. If not present, defaults to `ESMF_IOFMT_NETCDF`.

[rc] Return code; equals `ESMF_SUCCESS` if there are no errors.

28.5.18 ESMF_ArrayBundleRedist - Execute an ArrayBundle redistribution

INTERFACE:

```
subroutine ESMF_ArrayBundleRedist(srcArrayBundle, dstArrayBundle, &
  routehandle, checkflag, rc)
```

ARGUMENTS:

```
    type(ESMF_ArrayBundle), intent(in),    optional :: srcArrayBundle
    type(ESMF_ArrayBundle), intent(inout), optional :: dstArrayBundle
    type(ESMF_RouteHandle), intent(inout)           :: routehandle
-- The following arguments require argument keyword syntax (e.g. rc=rc). --
    logical,                intent(in),    optional :: checkflag
    integer,                intent(out),   optional :: rc
```

STATUS:

- This interface is backward compatible with ESMF versions starting at 5.2.0r. If code using this interface compiles with any version of ESMF starting with 5.2.0r, then it will compile with the current version.

DESCRIPTION:

Execute a precomputed ArrayBundle redistribution from the Arrays in `srcArrayBundle` to the Arrays in `dstArrayBundle`.

The `srcArrayBundle` and `dstArrayBundle` arguments are optional in support of the situation where `srcArrayBundle` and/or `dstArrayBundle` are not defined on all PETs. The `srcArrayBundle` and `dstArrayBundle` must be specified on those PETs that hold source or destination DEs, respectively, but may be omitted on all other PETs. PETs that hold neither source nor destination DEs may omit both arguments.

This call is *collective* across the current VM.

[srcArrayBundle] `ESMF_ArrayBundle` with source data.

[dstArrayBundle] `ESMF_ArrayBundle` with destination data.

routehandle Handle to the precomputed Route.

[checkflag] If set to `.TRUE.` the input Array pairs will be checked for consistency with the precomputed operation provided by `routehandle`. If set to `.FALSE.` *(default)* only a very basic input check will be performed, leaving many inconsistencies undetected. Set `checkflag` to `.FALSE.` to achieve highest performance.

[rc] Return code; equals `ESMF_SUCCESS` if there are no errors.

28.5.19 ESMF_ArrayBundleRedistRelease - Release resources associated with ArrayBundle redistribution

INTERFACE:

```
subroutine ESMF_ArrayBundleRedistRelease(routehandle, &
  noGarbage, rc)
```

ARGUMENTS:

```
    type(ESMF_RouteHandle), intent(inout)          :: routehandle
-- The following arguments require argument keyword syntax (e.g. rc=rc). --
    logical,                intent(in),   optional :: noGarbage
    integer,                intent(out),  optional :: rc
```

STATUS:

- This interface is backward compatible with ESMF versions starting at 5.2.0r. If code using this interface compiles with any version of ESMF starting with 5.2.0r, then it will compile with the current version.
- This interface was modified since ESMF version 5.2.0r. The fact that code using this interface compiles with the current ESMF version does not guarantee that it compiles with previous versions of this interface. If user code compatibility with version 5.2.0r is desired then care must be taken to limit the use of this interface to features that were available in the 5.2.0r release.
  Changes made after the 5.2.0r release:

  8.0.0 Added argument `noGarbage`. The argument provides a mechanism to override the default garbage collection mechanism when destroying an ESMF object.

DESCRIPTION:

Release resources associated with an ArrayBundle redistribution. After this call `routehandle` becomes invalid.

routehandle Handle to the precomputed Route.

[noGarbage] If set to `.TRUE.` the object will be fully destroyed and removed from the ESMF garbage collection system. Note however that under this condition ESMF cannot protect against accessing the destroyed object through dangling aliases – a situation which may lead to hard to debug application crashes.

It is generally recommended to leave the `noGarbage` argument set to `.FALSE.` (the default), and to take advantage of the ESMF garbage collection system which will prevent problems with dangling aliases or incorrect sequences of destroy calls. However this level of support requires that a small remnant of the object is kept in memory past the destroy call. This can lead to an unexpected increase in memory consumption over the course of execution in applications that use temporary ESMF objects. For situations where the repeated creation and destruction of temporary objects leads to memory issues, it is recommended to call with `noGarbage` set to `.TRUE.`, fully removing the entire temporary object from memory.

[rc] Return code; equals `ESMF_SUCCESS` if there are no errors.

28.5.20 ESMF_ArrayBundleRedistStore - Precompute an ArrayBundle redistribution with local factor argument

INTERFACE:

```
! Private name; call using ESMF_ArrayBundleRedistStore()
subroutine ESMF_ArrayBundleRedistStore<type><kind>(srcArrayBundle, &
  dstArrayBundle, routehandle, factor, ignoreUnmatchedIndicesFlag, &
  srcToDstTransposeMap, rc)
```

ARGUMENTS:

```
type(ESMF_ArrayBundle),  intent(in)            :: srcArrayBundle
type(ESMF_ArrayBundle),  intent(inout)         :: dstArrayBundle
type(ESMF_RouteHandle),  intent(inout)         :: routehandle
<type>(ESMF_KIND_<kind>),intent(in)            :: factor
```

```
-- The following arguments require argument keyword syntax (e.g. rc=rc). --
    logical,                intent(in),  optional :: ignoreUnmatchedIndicesFlag(:)
    integer,                intent(in),  optional :: srcToDstTransposeMap(:)
    integer,                intent(out), optional :: rc
```

STATUS:

- This interface is backward compatible with ESMF versions starting at 5.2.0r. If code using this interface compiles with any version of ESMF starting with 5.2.0r, then it will compile with the current version.
- This interface was modified since ESMF version 5.2.0r. The fact that code using this interface compiles with the current ESMF version does not guarantee that it compiles with previous versions of this interface. If user code compatibility with version 5.2.0r is desired then care must be taken to limit the use of this interface to features that were available in the 5.2.0r release.
  Changes made after the 5.2.0r release:

  8.1.0 Added argument `ignoreUnmatchedIndicesFlag` to support cases where source and destination side do not cover the exact same index space.

DESCRIPTION:

Store an ArrayBundle redistribution operation from `srcArrayBundle` to `dstArrayBundle`. The redistribution between ArrayBundles is defined as the sequence of individual Array redistributions over all source and destination Array pairs in sequence. The method requires that `srcArrayBundle` and `dstArrayBundle` reference an identical number of `ESMF_Array` objects.

The effect of this method on ArrayBundles that contain aliased members is undefined.

PETs that specify a `factor` argument must use the <type><kind> overloaded interface. Other PETs call into the interface without `factor` argument. If multiple PETs specify the `factor` argument its type and kind as well as its value must match across all PETs. If none of the PETs specifies a `factor` argument the default will be a factor of 1.

See the description of method `ESMF_ArrayRedistStore()` for the definition of the Array based operation.

The routine returns an `ESMF_RouteHandle` that can be used to call `ESMF_ArrayBundleRedist()` on any pair of ArrayBundles that matches `srcArrayBundle` and `dstArrayBundle` in *type*, *kind*, and memory layout of the *distributed* dimensions. However, the size, number, and index order of *undistributed* dimensions may be different. See section 38.2.5 for a more detailed discussion of RouteHandle reusability.

This method is overloaded for:
`ESMF_TYPEKIND_I4`, `ESMF_TYPEKIND_I8`,
`ESMF_TYPEKIND_R4`, `ESMF_TYPEKIND_R8`.

This call is *collective* across the current VM.

srcArrayBundle `ESMF_ArrayBundle` with source data.

dstArrayBundle `ESMF_ArrayBundle` with destination data. The data in these Arrays may be destroyed by this call.

routehandle Handle to the precomputed Route.

factor Factor by which to multiply source data.

[ignoreUnmatchedIndicesFlag] If set to .false., the *default*, source and destination side must cover the identical index space, using precisely matching sequence indices. If set to .true., mismatching sequence indices between source and destination side are silently ignored. The size of this array argument must either be 1 or equal

the number of Arrays in the `srcArrayBundle` and `dstArrayBundle` arguments. In the latter case, the handling of unmatched indices is specified for each Array pair separately. If only one element is specified, it is used for *all* Array pairs.

[srcToDstTransposeMap] List with as many entries as there are dimensions in the Arrays in `srcArrayBundle`. Each entry maps the corresponding source Array dimension against the specified destination Array dimension. Mixing of distributed and undistributed dimensions is supported.

[rc] Return code; equals `ESMF_SUCCESS` if there are no errors.

28.5.21 ESMF_ArrayBundleRedistStore - Precompute an ArrayBundle redistribution without local factor argument

INTERFACE:

```
! Private name; call using ESMF_ArrayBundleRedistStore()
subroutine ESMF_ArrayBundleRedistStoreNF(srcArrayBundle, dstArrayBundle, &
  routehandle, ignoreUnmatchedIndicesFlag, &
  srcToDstTransposeMap, rc)
```

ARGUMENTS:

```
  type(ESMF_ArrayBundle), intent(in)            :: srcArrayBundle
  type(ESMF_ArrayBundle), intent(inout)         :: dstArrayBundle
  type(ESMF_RouteHandle), intent(inout)         :: routehandle
-- The following arguments require argument keyword syntax (e.g. rc=rc). --
  logical,                intent(in),  optional :: ignoreUnmatchedIndicesFlag(:)
  integer,                intent(in),  optional :: srcToDstTransposeMap(:)
  integer,                intent(out), optional :: rc
```

STATUS:

- This interface is backward compatible with ESMF versions starting at 5.2.0r. If code using this interface compiles with any version of ESMF starting with 5.2.0r, then it will compile with the current version.
- This interface was modified since ESMF version 5.2.0r. The fact that code using this interface compiles with the current ESMF version does not guarantee that it compiles with previous versions of this interface. If user code compatibility with version 5.2.0r is desired then care must be taken to limit the use of this interface to features that were available in the 5.2.0r release.
  Changes made after the 5.2.0r release:

  8.1.0 Added argument `ignoreUnmatchedIndicesFlag` to support cases where source and destination side do not cover the exact same index space.

DESCRIPTION:

Store an ArrayBundle redistribution operation from `srcArrayBundle` to `dstArrayBundle`. The redistribution between ArrayBundles is defined as the sequence of individual Array redistributions over all source and destination Array pairs in sequence. The method requires that `srcArrayBundle` and `dstArrayBundle` reference an identical number of `ESMF_Array` objects.

The effect of this method on ArrayBundles that contain aliased members is undefined.

PETs that specify a `factor` argument must use the <type><kind> overloaded interface. Other PETs call into the interface without `factor` argument. If multiple PETs specify the `factor` argument its type and kind as well as its value must match across all PETs. If none of the PETs specifies a `factor` argument the default will be a factor of 1.

See the description of method `ESMF_ArrayRedistStore()` for the definition of the Array based operation.

The routine returns an `ESMF_RouteHandle` that can be used to call `ESMF_ArrayBundleRedist()` on any pair of ArrayBundles that matches `srcArrayBundle` and `dstArrayBundle` in *type*, *kind*, and memory layout of the *distributed* dimensions. However, the size, number, and index order of *undistributed* dimensions may be different. See section 38.2.5 for a more detailed discussion of RouteHandle reusability.

This call is *collective* across the current VM.

srcArrayBundle `ESMF_ArrayBundle` with source data.

dstArrayBundle `ESMF_ArrayBundle` with destination data. The data in these Arrays may be destroyed by this call.

routehandle Handle to the precomputed Route.

[ignoreUnmatchedIndicesFlag] If set to .false., the *default*, source and destination side must cover the identical index space, using precisely matching sequence indices. If set to .true., mismatching sequence indices between source and destination side are silently ignored. The size of this array argument must either be 1 or equal the number of Arrays in the `srcArrayBundle` and `dstArrayBundle` arguments. In the latter case, the handling of unmatched indices is specified for each Array pair separately. If only one element is specified, it is used for *all* Array pairs.

[srcToDstTransposeMap] List with as many entries as there are dimensions in the Arrays in `srcArrayBundle`. Each entry maps the corresponding source Array dimension against the specified destination Array dimension. Mixing of distributed and undistributed dimensions is supported.

[rc] Return code; equals `ESMF_SUCCESS` if there are no errors.

28.5.22 ESMF_ArrayBundleRemove - Remove Arrays from ArrayBundle

INTERFACE:

```
subroutine ESMF_ArrayBundleRemove(arraybundle, arrayNameList, &
  multiflag, relaxedflag, rc)
```

ARGUMENTS:

```
     type(ESMF_ArrayBundle), intent(inout)         :: arraybundle
     character(len=*),       intent(in)            :: arrayNameList(:)
 -- The following arguments require argument keyword syntax (e.g. rc=rc). --
     logical,                intent(in),  optional :: multiflag
     logical,                intent(in),  optional :: relaxedflag
     integer,                intent(out), optional :: rc
```

STATUS:

- This interface is backward compatible with ESMF versions starting at 5.2.0r. If code using this interface compiles with any version of ESMF starting with 5.2.0r, then it will compile with the current version.

DESCRIPTION:

Remove Array(s) by name from ArrayBundle. In the relaxed setting it is *not* an error if `arrayNameList` contains names that are not found in `arraybundle`.

arraybundle `ESMF_ArrayBundle` from which to remove items.

arrayNameList List of items to remove.

[multiflag] A setting of `.true.` allows multiple Arrays with the same name to be removed from `arraybundle`. For `.false.`, items to be removed must have unique names. The default setting is `.false.`.

[relaxedflag] A setting of `.true.` indicates a relaxed definition of "remove" where it is *not* an error if `arrayNameList` contains item names that are not found in `arraybundle`. For `.false.` this is treated as an error condition. Further, in `multiflag=.false.` mode, the relaxed definition of "remove" also covers the case where there are multiple items in `arraybundle` that match a single entry in `arrayNameList`. For `relaxedflag=.false.` this is treated as an error condition. The default setting is `.false.`.

[rc] Return code; equals `ESMF_SUCCESS` if there are no errors.

28.5.23 ESMF_ArrayBundleReplace - Replace Arrays in ArrayBundle

INTERFACE:

```
     subroutine ESMF_ArrayBundleReplace(arraybundle, arrayList, &
       multiflag, relaxedflag, rc)
```

ARGUMENTS:

```
     type(ESMF_ArrayBundle), intent(inout)         :: arraybundle
     type(ESMF_Array),       intent(in)            :: arrayList(:)
 -- The following arguments require argument keyword syntax (e.g. rc=rc). --
     logical,                intent(in),  optional :: multiflag
     logical,                intent(in),  optional :: relaxedflag
     integer,                intent(out), optional :: rc
```

STATUS:

- This interface is backward compatible with ESMF versions starting at 5.2.0r. If code using this interface compiles with any version of ESMF starting with 5.2.0r, then it will compile with the current version.

DESCRIPTION:

Replace Array(s) by name in ArrayBundle. In the relaxed setting it is not an error if `arrayList` contains Arrays that do not match by name any item in `arraybundle`. These Arrays are simply ignored in this case.

arraybundle `ESMF_ArrayBundle` in which to replace items.

arrayList List of items to replace.

[multiflag] A setting of `.true.` allows multiple items with the same name to be replaced in `arraybundle`. For `.false.`, items to be replaced must have unique names. The default setting is `.false.`.

[relaxedflag] A setting of `.true.` indicates a relaxed definition of "replace" where it is *not* an error if `arrayList` contains items with names that are not found in `arraybundle`. These items in `arrayList` are ignored in the relaxed mode. For `.false.` this is treated as an error condition. Further, in `multiflag=.false.` mode, the relaxed definition of "replace" also covers the case where there are multiple items in `arraybundle` that match a single entry by name in `arrayList`. For `relaxedflag=.false.` this is treated as an error condition. The default setting is `.false.`.

[rc] Return code; equals `ESMF_SUCCESS` if there are no errors.

28.5.24 ESMF_ArrayBundleSMM - Execute an ArrayBundle sparse matrix multiplication

INTERFACE:

```
subroutine ESMF_ArrayBundleSMM(srcArrayBundle, dstArrayBundle, &
  routehandle, &
  zeroregion, & ! DEPRECATED ARGUMENT
  zeroregionflag, termorderflag, checkflag, rc)
```

ARGUMENTS:

```
  type(ESMF_ArrayBundle),    intent(in),         optional :: srcArrayBundle
  type(ESMF_ArrayBundle),    intent(inout),      optional :: dstArrayBundle
  type(ESMF_RouteHandle),    intent(inout)                :: routehandle
-- The following arguments require argument keyword syntax (e.g. rc=rc). --
  type(ESMF_Region_Flag),    intent(in), optional :: zeroregion ! DEPRECATED ARGUMENT
  type(ESMF_Region_Flag),    intent(in), target, optional :: zeroregionflag(:)
  type(ESMF_TermOrder_Flag), intent(in), target, optional :: termorderflag(:)
  logical,                   intent(in),         optional :: checkflag
  integer,                   intent(out),        optional :: rc
```

STATUS:

- This interface is backward compatible with ESMF versions starting at 5.2.0r. If code using this interface compiles with any version of ESMF starting with 5.2.0r, then it will compile with the current version.
- This interface was modified since ESMF version 5.2.0r. The fact that code using this interface compiles with the current ESMF version does not guarantee that it compiles with previous versions of this interface. If user code compatibility with version 5.2.0r is desired then care must be taken to limit the use of this interface to features that were available in the 5.2.0r release.
  Changes made after the 5.2.0r release:

  7.0.0 Added argument `termorderflag`. The new argument gives the user control over the order in which the src terms are summed up.

8.1.0 Added argument `zeroregionflag`, and deprecated `zeroregion`. The new argument allows greater flexibility in setting the zero region for individual ArrayBundle members.

DESCRIPTION:

Execute a precomputed ArrayBundle sparse matrix multiplication from the Arrays in `srcArrayBundle` to the Arrays in `dstArrayBundle`.

The `srcArrayBundle` and `dstArrayBundle` arguments are optional in support of the situation where `srcArrayBundle` and/or `dstArrayBundle` are not defined on all PETs. The `srcArrayBundle` and `dstArrayBundle` must be specified on those PETs that hold source or destination DEs, respectively, but may be omitted on all other PETs. PETs that hold neither source nor destination DEs may omit both arguments.

This call is *collective* across the current VM.

[srcArrayBundle] `ESMF_ArrayBundle` with source data.

[dstArrayBundle] `ESMF_ArrayBundle` with destination data.

routehandle Handle to the precomputed Route.

[zeroregion] If set to `ESMF_REGION_TOTAL` *(default)* the total regions of all DEs in all Arrays in `dstArrayBundle` will be initialized to zero before updating the elements with the results of the sparse matrix multiplication. If set to `ESMF_REGION_EMPTY` the elements in the Arrays in `dstArrayBundle` will not be modified prior to the sparse matrix multiplication and results will be added to the incoming element values. Setting `zeroregion` to `ESMF_REGION_SELECT` will only zero out those elements in the destination Arrays that will be updated by the sparse matrix multiplication. See section 55.50 for a complete list of valid settings.

[zeroregionflag] If set to `ESMF_REGION_TOTAL` *(default)* the total regions of all DEs in the destination Array will be initialized to zero before updating the elements with the results of the sparse matrix multiplication. If set to `ESMF_REGION_EMPTY` the elements in the destination Array will not be modified prior to the sparse matrix multiplication and results will be added to the incoming element values. A setting of `ESMF_REGION_SELECT` will only zero out those elements in the destination Array that will be updated by the sparse matrix multiplication. See section 55.50 for a complete list of valid settings. The size of this array argument must either be 1 or equal the number of Arrays in the `srcArrayBundle` and `dstArrayBundle` arguments. In the latter case, the zero region for each Array SMM operation is indicated separately. If only one zero region element is specified, it is used for *all* Array pairs.

[termorderflag] Specifies the order of the source side terms in all of the destination sums. The `termorderflag` only affects the order of terms during the execution of the RouteHandle. See the 38.2.1 section for an in-depth discussion of *all* bit-for-bit reproducibility aspects related to route-based communication methods. See 55.60 for a full list of options. The size of this array argument must either be 1 or equal the number of Arrays in the `srcArrayBundle` and `dstArrayBundle` arguments. In the latter case, the term order for each Array SMM operation is indicated separately. If only one term order element is specified, it is used for *all* Array pairs. The default is `(/ESMF_TERMORDER_FREE/)`, allowing maximum flexibility in the order of terms for optimum performance.

[checkflag] If set to `.TRUE.` the input Array pairs will be checked for consistency with the precomputed operation provided by `routehandle`. If set to `.FALSE.` *(default)* only a very basic input check will be performed, leaving many inconsistencies undetected. Set `checkflag` to `.FALSE.` to achieve highest performance.

[rc] Return code; equals `ESMF_SUCCESS` if there are no errors.

28.5.25 ESMF_ArrayBundleSMMRelease - Release resources associated with ArrayBundle sparse matrix multiplication

INTERFACE:

```
subroutine ESMF_ArrayBundleSMMRelease(routehandle, &
  noGarbage, rc)
```

ARGUMENTS:

```
  type(ESMF_RouteHandle), intent(inout)          :: routehandle
-- The following arguments require argument keyword syntax (e.g. rc=rc). --
  logical,                intent(in),   optional :: noGarbage
  integer,                intent(out),  optional :: rc
```

STATUS:

- This interface is backward compatible with ESMF versions starting at 5.2.0r. If code using this interface compiles with any version of ESMF starting with 5.2.0r, then it will compile with the current version.
- This interface was modified since ESMF version 5.2.0r. The fact that code using this interface compiles with the current ESMF version does not guarantee that it compiles with previous versions of this interface. If user code compatibility with version 5.2.0r is desired then care must be taken to limit the use of this interface to features that were available in the 5.2.0r release.
  Changes made after the 5.2.0r release:

  8.0.0 Added argument `noGarbage`. The argument provides a mechanism to override the default garbage collection mechanism when destroying an ESMF object.

DESCRIPTION:

Release resources associated with an ArrayBundle sparse matrix multiplication. After this call `routehandle` becomes invalid.

routehandle Handle to the precomputed Route.

[noGarbage] If set to `.TRUE.` the object will be fully destroyed and removed from the ESMF garbage collection system. Note however that under this condition ESMF cannot protect against accessing the destroyed object through dangling aliases – a situation which may lead to hard to debug application crashes.

It is generally recommended to leave the `noGarbage` argument set to `.FALSE.` (the default), and to take advantage of the ESMF garbage collection system which will prevent problems with dangling aliases or incorrect sequences of destroy calls. However this level of support requires that a small remnant of the object is kept in memory past the destroy call. This can lead to an unexpected increase in memory consumption over the course of execution in applications that use temporary ESMF objects. For situations where the repeated creation and destruction of temporary objects leads to memory issues, it is recommended to call with `noGarbage` set to `.TRUE.`, fully removing the entire temporary object from memory.

[rc] Return code; equals `ESMF_SUCCESS` if there are no errors.

28.5.26 ESMF_ArrayBundleSMMStore - Precompute an ArrayBundle sparse matrix multiplication with local factors

INTERFACE:

```
! Private name; call using ESMF_ArrayBundleSMMStore()
subroutine ESMF_ArrayBundleSMMStore<type><kind>(srcArrayBundle, &
  dstArrayBundle, routehandle, factorList, factorIndexList, &
  ignoreUnmatchedIndicesFlag, srcTermProcessing, rc)
```

ARGUMENTS:

```
  type(ESMF_ArrayBundle),           intent(in)    :: srcArrayBundle
  type(ESMF_ArrayBundle),           intent(inout) :: dstArrayBundle
  type(ESMF_RouteHandle),           intent(inout) :: routehandle
  <type>(ESMF_KIND_<kind>), target, intent(in)    :: factorList(:)
  integer,                          intent(in)    :: factorIndexList(:,:)
-- The following arguments require argument keyword syntax (e.g. rc=rc). --
  logical,                intent(in),    optional :: ignoreUnmatchedIndicesFlag(:)
  integer,                intent(inout), optional :: srcTermProcessing(:)
  integer,                intent(out),   optional :: rc
```

STATUS:

- This interface is backward compatible with ESMF versions starting at 5.2.0r. If code using this interface compiles with any version of ESMF starting with 5.2.0r, then it will compile with the current version.
- This interface was modified since ESMF version 5.2.0r. The fact that code using this interface compiles with the current ESMF version does not guarantee that it compiles with previous versions of this interface. If user code compatibility with version 5.2.0r is desired then care must be taken to limit the use of this interface to features that were available in the 5.2.0r release.
  Changes made after the 5.2.0r release:

  7.1.0r Added argument `srcTermProcessing`. The new argument gives the user access to the tuning parameter affecting the sparse matrix execution and bit-wise reproducibility.

  8.1.0 Added argument `ignoreUnmatchedIndicesFlag` to support cases where the sparse matrix includes terms with source or destination sequence indices not present in the source or destination array.

DESCRIPTION:

Store an ArrayBundle sparse matrix multiplication operation from `srcArrayBundle` to `dstArrayBundle`. The sparse matrix multiplication between ArrayBundles is defined as the sequence of individual Array sparse matrix multiplications over all source and destination Array pairs in sequence. The method requires that `srcArrayBundle` and `dstArrayBundle` reference an identical number of `ESMF_Array` objects.

The effect of this method on ArrayBundles that contain aliased members is undefined.

PETs that specify non-zero matrix coefficients must use the <type><kind> overloaded interface and provide the `factorList` and `factorIndexList` arguments. Providing `factorList` and `factorIndexList` arguments with `size(factorList) = (/0/)` and `size(factorIndexList) = (/2,0/)` or `(/4,0/)` indicates that a PET does not provide matrix elements. Alternatively, PETs that do not provide matrix elements may also call into the overloaded interface *without* `factorList` and `factorIndexList` arguments.

See the description of method `ESMF_ArraySMMStore()` for the definition of the Array based operation.

The routine returns an `ESMF_RouteHandle` that can be used to call `ESMF_ArrayBundleSMM()` on any pair of ArrayBundles that matches `srcArrayBundle` and `dstArrayBundle` in *type*, *kind*, and memory layout of the *distributed* dimensions. However, the size, number, and index order of *undistributed* dimensions may be different. See section 38.2.5 for a more detailed discussion of RouteHandle reusability.

This method is overloaded for:
`ESMF_TYPEKIND_I4`, `ESMF_TYPEKIND_I8`,
`ESMF_TYPEKIND_R4`, `ESMF_TYPEKIND_R8`.

This call is *collective* across the current VM.

srcArrayBundle `ESMF_ArrayBundle` with source data.

dstArrayBundle `ESMF_ArrayBundle` with destination data. The data in these Arrays may be destroyed by this call.

routehandle Handle to the precomputed Route.

factorList List of non-zero coefficients.

factorIndexList Pairs of sequence indices for the factors stored in `factorList`.

The second dimension of `factorIndexList` steps through the list of pairs, i.e. `size(factorIndexList,2) == size(factorList)`. The first dimension of `factorIndexList` is either of size 2 or size 4.

In the *size 2 format* `factorIndexList(1,:)` specifies the sequence index of the source element in the source Array while `factorIndexList(2,:)` specifies the sequence index of the destination element in the destination Array. For this format to be a valid option source and destination Arrays must have matching number of tensor elements (the product of the sizes of all Array tensor dimensions). Under this condition an identity matrix can be applied within the space of tensor elements for each sparse matrix factor.

The *size 4 format* is more general and does not require a matching tensor element count. Here the `factorIndexList(1,:)` specifies the sequence index while `factorIndexList(2,:)` specifies the tensor sequence index of the source element in the source Array. Further `factorIndexList(3,:)` specifies the sequence index and `factorIndexList(4,:)` specifies the tensor sequence index of the destination element in the destination Array.

See section 29.2.18 for details on the definition of Array *sequence indices* and *tensor sequence indices*.

[ignoreUnmatchedIndicesFlag] If set to .false., the *default*, source and destination side must cover all of the squence indices defined in the sparse matrix. An error will be returned if a sequence index in the sparse matrix does not match on either the source or destination side. If set to .true., mismatching sequence indices are silently ignored. The size of this array argument must either be 1 or equal the number of Arrays in the `srcArrayBundle` and `dstArrayBundle` arguments. In the latter case, the handling of unmatched indices is specified for each Array pair separately. If only one element is specified, it is used for *all* Array pairs.

[srcTermProcessing] Source term summing options for route handle creation. See `ESMF_ArraySMMStore` documentation for a full parameter description. Two forms may be provided. If a single element list is provided, this integer value is applied across all bundle members. Otherwise, the list must contain as many elements as there are bundle members. For the special case of accessing the auto-tuned parameter (providing a negative integer value), the list length must equal the bundle member count.

[rc] Return code; equals `ESMF_SUCCESS` if there are no errors.

28.5.27 ESMF_ArrayBundleSMMStore - Precompute an ArrayBundle sparse matrix multiplication without local factors

INTERFACE:

```
! Private name; call using ESMF_ArrayBundleSMMStore()
subroutine ESMF_ArrayBundleSMMStoreNF(srcArrayBundle, dstArrayBundle, &
  routehandle, ignoreUnmatchedIndicesFlag, srcTermProcessing, rc)
```

ARGUMENTS:

```
  type(ESMF_ArrayBundle),  intent(in)              :: srcArrayBundle
  type(ESMF_ArrayBundle),  intent(inout)           :: dstArrayBundle
  type(ESMF_RouteHandle),  intent(inout)           :: routehandle
-- The following arguments require argument keyword syntax (e.g. rc=rc). --
  logical,                 intent(in),    optional :: ignoreUnmatchedIndicesFlag(:)
  integer,                 intent(inout), optional :: srcTermProcessing(:)
  integer,                 intent(out),   optional :: rc
```

STATUS:

- This interface is backward compatible with ESMF versions starting at 5.2.0r. If code using this interface compiles with any version of ESMF starting with 5.2.0r, then it will compile with the current version.
- This interface was modified since ESMF version 5.2.0r. The fact that code using this interface compiles with the current ESMF version does not guarantee that it compiles with previous versions of this interface. If user code compatibility with version 5.2.0r is desired then care must be taken to limit the use of this interface to features that were available in the 5.2.0r release.
  Changes made after the 5.2.0r release:

  7.1.0r Added argument `srcTermProcessing`. The new argument gives the user access to the tuning parameter affecting the sparse matrix execution and bit-wise reproducibility.

  8.1.0 Added argument `ignoreUnmatchedIndicesFlag` to support cases where the sparse matrix includes terms with source or destination sequence indices not present in the source or destination array.

DESCRIPTION:

Store an ArrayBundle sparse matrix multiplication operation from `srcArrayBundle` to `dstArrayBundle`. The sparse matrix multiplication between ArrayBundles is defined as the sequence of individual Array sparse matrix multiplications over all source and destination Array pairs in sequence. The method requires that `srcArrayBundle` and `dstArrayBundle` reference an identical number of `ESMF_Array` objects.

The effect of this method on ArrayBundles that contain aliased members is undefined.

PETs that specify non-zero matrix coefficients must use the <type><kind> overloaded interface and provide the `factorList` and `factorIndexList` arguments. Providing `factorList` and `factorIndexList` arguments with `size(factorList) = (/0/)` and `size(factorIndexList) = (/2,0/)` or `(/4,0/)` indicates that a PET does not provide matrix elements. Alternatively, PETs that do not provide matrix elements may also call into the overloaded interface *without* `factorList` and `factorIndexList` arguments.

See the description of method `ESMF_ArraySMMStore()` for the definition of the Array based operation.

The routine returns an `ESMF_RouteHandle` that can be used to call `ESMF_ArrayBundleSMM()` on any pair of ArrayBundles that matches `srcArrayBundle` and `dstArrayBundle` in *type*, *kind*, and memory layout of the

distributed dimensions. However, the size, number, and index order of *undistributed* dimensions may be different. See section 38.2.5 for a more detailed discussion of RouteHandle reusability.

This call is *collective* across the current VM.

srcArrayBundle `ESMF_ArrayBundle` with source data.

dstArrayBundle `ESMF_ArrayBundle` with destination data. The data in these Arrays may be destroyed by this call.

routehandle Handle to the precomputed Route.

[ignoreUnmatchedIndicesFlag] If set to .false., the *default*, source and destination side must cover all of the squence indices defined in the sparse matrix. An error will be returned if a sequence index in the sparse matrix does not match on either the source or destination side. If set to .true., mismatching sequence indices are silently ignored. The size of this array argument must either be 1 or equal the number of Arrays in the `srcArrayBundle` and `dstArrayBundle` arguments. In the latter case, the handling of unmatched indices is specified for each Array pair separately. If only one element is specified, it is used for *all* Array pairs.

[srcTermProcessing] Source term summing options for route handle creation. See `ESMF_ArraySMMStore` documentation for a full parameter description. Two forms may be provided. If a single element list is provided, this integer value is applied across all bundle members. Otherwise, the list must contain as many elements as there are bundle members. For the special case of accessing the auto-tuned parameter (providing a negative integer value), the list length must equal the bundle member count.

[rc] Return code; equals `ESMF_SUCCESS` if there are no errors.

28.5.28 ESMF_ArrayBundleWrite - Write the Arrays into a file

INTERFACE:

```
  subroutine ESMF_ArrayBundleWrite(arraybundle, fileName, &
    convention, purpose, singleFile, overwrite, status, timeslice, iofmt, rc)
```

ARGUMENTS:

```
    type(ESMF_ArrayBundle),     intent(in)              :: arraybundle
    character(*),               intent(in)              :: fileName
 -- The following arguments require argument keyword syntax (e.g. rc=rc). --
    character(*),               intent(in),  optional  :: convention
    character(*),               intent(in),  optional  :: purpose
    logical,                    intent(in),  optional  :: singleFile
    logical,                    intent(in),  optional  :: overwrite
    type(ESMF_FileStatus_Flag), intent(in),  optional  :: status
    integer,                    intent(in),  optional  :: timeslice
    type(ESMF_IOFmt_Flag),      intent(in),  optional  :: iofmt
    integer,                    intent(out), optional  :: rc
```

DESCRIPTION:

Write the Arrays into a file. For this API to be functional, the environment variable `ESMF_PIO` should be set to either "internal" or "external" when the ESMF library is built. Please see the section on Data I/O, 39.2.

When `convention` and `purpose` arguments are specified, NetCDF dimension labels and variable attributes are written from each Array in the ArrayBundle from the corresponding Attribute package. Additionally, Attributes may be set on the ArrayBundle level under the same Attribute package. This allows the specification of global attributes within the file. As with individual Arrays, the value associated with each name may be either a scalar character string, or a scalar or array of type integer, real, or double precision.

Limitations:

- For multi-tile Arrays,all Arrays in the ArrayBundle must contain the same number of tiles.

The arguments are:

arraybundle An `ESMF_ArrayBundle` object.

fileName The name of the output file to which array bundle data is written. If the ArrayBundle contains multi-tile Arrays, then fileName must contain exactly one instance of "*"; this is a placeholder that will be replaced by the tile number, with each tile being written to a separate file. (For example, for a fileName of "myfile*.nc", tile 1 will be written to "myfile1.nc", tile 2 to "myfile2.nc", etc.) (This handling of the fileName for multi-tile I/O is subject to change.)

[convention] Specifies an Attribute package associated with the ArrayBundle, and the contained Arrays, used to create NetCDF dimension labels and attributes in the file. When this argument is present, the `purpose` argument must also be present. Use this argument only with a NetCDF I/O format. If binary format is used, ESMF will return an error code.

[purpose] Specifies an Attribute package associated with the ArrayBundle, and the contained Arrays, used to create NetCDF dimension labels and attributes in the file. When this argument is present, the `convention` argument must also be present. Use this argument only with a NetCDF I/O format. If binary format is used, ESMF will return an error code.

[singleFile] A logical flag, the default is .true., i.e., all arrays in the bundle are written in one single file. If .false., each array will be written in separate files; these files are numbered with the name based on the argument "file". That is, a set of files are named: [file_name]001, [file_name]002, [file_name]003,...

[overwrite] A logical flag, the default is .false., i.e., existing Array data may *not* be overwritten. If .true., only the data corresponding to each Array's name will be be overwritten. If the `timeslice` option is given, only data for the given timeslice may be overwritten. Note that it is always an error to attempt to overwrite a NetCDF variable with data which has a different shape.

[status] The file status. Please see Section 55.22 for the list of options. If not present, defaults to `ESMF_FILESTATUS_UNKNOWN`.

[timeslice] Some I/O formats (e.g. NetCDF) support the output of data in form of time slices. The `timeslice` argument provides access to this capability. `timeslice` must be positive. The behavior of this option may depend on the setting of the `overwrite` flag:

`overwrite = .false.`**:** If the timeslice value is less than the maximum time already in the file, the write will fail.

`overwrite = .true.`**:** Any positive timeslice value is valid.

By default, i.e. by omitting the `timeslice` argument, no provisions for time slicing are made in the output file, however, if the file already contains a time axis for the variable, a timeslice one greater than the maximum will be written.

[iofmt] The I/O format. Please see Section 55.30 for the list of options. If not present, defaults to `ESMF_IOFMT_NETCDF`.

[rc] Return code; equals `ESMF_SUCCESS` if there are no errors.

29 Array Class

29.1 Description

The Array class is an alternative to the Field class for representing distributed, structured data. Unlike Fields, which are built to carry grid coordinate information, Arrays only carry information about the *indices* associated with grid cells. Since they do not have coordinate information, Arrays cannot be used to calculate interpolation weights. However, if the user supplies interpolation weights, the Array sparse matrix multiply (SMM) operation can be used to apply the weights and transfer data to the new grid. Arrays carry enough information to perform redistribution, scatter, and gather communication operations.

Like Fields, Arrays can be added to a State and used in inter-Component data communications. Arrays can also be grouped together into ArrayBundles, allowing operations to be performed collectively on the whole group. One motivation for this is convenience; another is the ability to schedule optimized, collective data transfers.

From a technical standpoint, the ESMF Array class is an index space based, distributed data storage class. Its purpose is to hold distributed user data. Each decompositon element (DE) is associated with its own memory allocation. The index space relationship between DEs is described by the ESMF DistGrid class. DEs, and their associated memory allocation, are pinned either to a specific perisistent execution thread (PET), virtual address space (VAS), or a single system image (SSI). This aspect is managed by the ESMF DELayout class. Pinning to PET is the most common mode and is the default.

The Array class offers common communication patterns within the index space formalism. All RouteHandle based communication methods of the Field, FieldBundle, and ArrayBundle layers are implemented via the Array SMM operation.

29.2 Use and Examples

An `ESMF_Array` is a distributed object that must exist on all PETs of the current context. Each PET-local instance of an Array object contains memory allocations for all PET-local DEs. There may be 0, 1, or more DEs per PET and the number of DEs per PET can differ between PETs for the same Array object. Memory allocations may be provided for each PET by the user during Array creation or can be allocated as part of the Array create call. Many of the concepts of the `ESMF_Array` class are illustrated by the following examples.

29.2.1 Array from native Fortran array with 1 DE per PET

The create call of the `ESMF_Array` class has been overloaded extensively to facilitate the need for generality while keeping simple cases simple. The following program demonstrates one of the simpler cases, where existing local Fortran arrays are to be used to provide the PET-local memory allocations for the Array object.

```
program ESMF_ArrayFarrayEx

  use ESMF
  use ESMF_TestMod

  implicit none
```

The Fortran language provides a variety of ways to define and allocate an array. Actual Fortran array objects must either be explicit-shape or deferred-shape. In the first case the memory allocation and deallocation is automatic from

the user's perspective and the details of the allocation (static or dynamic, heap or stack) are left to the compiler. (Compiler flags may be used to control some of the details). In the second case, i.e. for deferred-shape actual objects, the array definition must include the `pointer` or `allocatable` attribute and it is the user's responsibility to allocate memory. While it is also the user's responsibility to deallocate memory for arrays with the `pointer` attribute the compiler will automatically deallocate allocatable arrays under certain circumstances defined by the Fortran standard.

The `ESMF_ArrayCreate()` interface has been written to accept native Fortran arrays of any flavor as a means to allow user-controlled memory management. The Array create call will check on each PET if sufficient memory has been provided by the specified Fortran arrays and will indicate an error if a problem is detected. However, the Array create call cannot validate the lifetime of the provided memory allocations. If, for instance, an Array object was created in a subroutine from an automatic explicit-shape array or an allocatable array, the memory allocations referenced by the Array object will be automatically deallocated on return from the subroutine unless provisions are made by the application writer to prevent such behavior. The Array object cannot control when memory that has been provided by the user during Array creation becomes deallocated, however, the Array will indicate an error if its memory references have been invalidated.

The easiest, portable way to provide safe native Fortran memory allocations to Array create is to use arrays with the `pointer` attribute. Memory allocated for an array pointer will not be deallocated automatically. However, in this case the possibility of memory leaks becomes an issue of concern. The deallocation of memory provided to an Array in form of a native Fortran allocation will remain the users responsibility.

None of the concerns discussed above are an issue in this example where the native Fortran array `farray` is defined in the main program. All different types of array memory allocation are demonstrated in this example. First `farrayE` is defined as a 2D explicit-shape array on each PET which will automatically provide memory for 10×10 elements.

```
! local variables
real(ESMF_KIND_R8)       :: farrayE(10,10)  ! explicit shape Fortran array
```

Then an allocatable array `farrayA` is declared which will be used to show user-controlled dynamic memory allocation.

```
real(ESMF_KIND_R8), allocatable :: farrayA(:,:) ! allocatable Fortran array
```

Finally an array with pointer attribute `farrayP` is declared, also used for user-controlled dynamic memory allocation.

```
real(ESMF_KIND_R8), pointer :: farrayP(:,:)   ! Fortran array pointer
```

A matching array pointer must also be available to gain access to the arrays held by an Array object.

```
real(ESMF_KIND_R8), pointer :: farrayPtr(:,:) ! matching Fortran array ptr
type(ESMF_DistGrid)         :: distgrid       ! DistGrid object
type(ESMF_Array)            :: array          ! Array object
integer                     :: rc


call ESMF_Initialize(defaultlogfilename="ArrayFarrayEx.Log", &
                     logkindflag=ESMF_LOGKIND_MULTI, rc=rc)
if (rc /= ESMF_SUCCESS) call ESMF_Finalize(endflag=ESMF_END_ABORT)
```

On each PET `farrayE` can be accessed directly to initialize the entire PET-local array.

```
farrayE = 12.45d0 ! initialize to some value
```

In order to create an Array object a DistGrid must first be created that describes the total index space and how it is decomposed and distributed. In the simplest case only the `minIndex` and `maxIndex` of the total space must be provided.

```
distgrid = ESMF_DistGridCreate(minIndex=(/1,1/), maxIndex=(/40,10/), rc=rc)
```

This example is assumed to run on 4 PETs. The default 2D decomposition will then be into 4 x 1 DEs as to ensure 1 DE per PET.

Now the Array object can be created using the `farrayE` and the DistGrid just created.

```
array = ESMF_ArrayCreate(farray=farrayE, distgrid=distgrid, &
  indexflag=ESMF_INDEX_DELOCAL, rc=rc)
```

The 40 x 10 index space defined by the `minIndex` and `maxIndex` arguments paired with the default decomposition will result in the following distributed Array.

```
        +---------------------------> 2nd dimension
        |   (1,1)-------+
        |     |         |
        |     |   DE 0  |   <--- farray on PET 0
        |     |         |
        |     +------(10,10)
        |  (11,1)-------+
        |     |         |
        |     |   DE 1  |   <--- farray on PET 1
        |     |         |
        |     +------(20,10)
        |  (21,1)-------+
        |     |         |
        |     |   DE 2  |   <--- farray on PET 2
        |     |         |
        |     +------(30,10)
        |  (31,1)-------+
        |     |         |
        |     |   DE 3  |   <--- farray on PET 3
        |     |         |
        |     +------(40,10)
        v
      1st dimension
```

Providing `farrayE` during Array creation does not change anything about the actual `farrayE` object. This means that each PET can use its local `farrayE` directly to access the memory referenced by the Array object.

```
print *, farrayE
```

Another way of accessing the memory associated with an Array object is to use `ArrayGet()` to obtain an Fortran pointer that references the PET-local array.

```
call ESMF_ArrayGet(array, farrayPtr=farrayPtr, rc=rc)
```

```
  print *, farrayPtr
```

Finally the Array object must be destroyed. The PET-local memory of the `farrayE`s will remain in user control and will not be altered by `ArrayDestroy()`.

```
  call ESMF_ArrayDestroy(array, rc=rc)
```

Since the memory allocation for each `farrayE` is automatic there is nothing more to do.

The interaction between `farrayE` and the Array class is representative also for the two other cases `farrayA` and `farrayP`. The only difference is in the handling of memory allocations.

```
  allocate(farrayA(10,10))    ! user controlled allocation
  farrayA = 23.67d0           ! initialize to some value
  array = ESMF_ArrayCreate(farray=farrayA, distgrid=distgrid, &
    indexflag=ESMF_INDEX_DELOCAL, rc=rc)

  print *, farrayA            ! print PET-local farrayA directly
  call ESMF_ArrayGet(array, farrayPtr=farrayPtr, rc=rc)! obtain array pointer
  print *, farrayPtr          ! print PET-local piece of Array through pointer
  call ESMF_ArrayDestroy(array, rc=rc) ! destroy the Array
  deallocate(farrayA)         ! user controlled de-allocation
```

The `farrayP` case is identical.

```
  allocate(farrayP(10,10))    ! user controlled allocation
  farrayP = 56.81d0           ! initialize to some value
  array = ESMF_ArrayCreate(farray=farrayP, distgrid=distgrid, &
    indexflag=ESMF_INDEX_DELOCAL, rc=rc)

  print *, farrayP            ! print PET-local farrayA directly
  call ESMF_ArrayGet(array, farrayPtr=farrayPtr, rc=rc)! obtain array pointer
  print *, farrayPtr          ! print PET-local piece of Array through pointer
  call ESMF_ArrayDestroy(array, rc=rc) ! destroy the Array
  deallocate(farrayP)         ! user controlled de-allocation
```

To wrap things up the DistGrid object is destroyed and ESMF can be finalized.

```
  call ESMF_DistGridDestroy(distgrid, rc=rc) ! destroy the DistGrid


  call ESMF_Finalize(rc=rc)

end program
```

29.2.2 Array from native Fortran array with extra elements for halo or padding

The example of the previous section showed how easy it is to create an Array object from existing PET-local Fortran arrays. The example did, however, not define any halo elements around the DE-local regions. The following code demonstrates how an Array object with space for a halo can be set up.

```
program ESMF_ArrayFarrayHaloEx

  use ESMF
  use ESMF_TestMod

  implicit none
```

The allocatable array `farrayA` will be used to provide the PET-local Fortran array for this example.

```
  ! local variables
  real(ESMF_KIND_R8), allocatable :: farrayA(:,:) ! allocatable Fortran array
  real(ESMF_KIND_R8), pointer :: farrayPtr(:,:)   ! matching Fortran array ptr
  type(ESMF_DistGrid)         :: distgrid         ! DistGrid object
  type(ESMF_Array)            :: array            ! Array object
  integer                     :: rc, i, j
  real(ESMF_KIND_R8)          :: localSum


  call ESMF_Initialize(defaultlogfilename="ArrayFarrayHaloEx.Log", &
                       logkindflag=ESMF_LOGKIND_MULTI, rc=rc)
  if (rc /= ESMF_SUCCESS) call ESMF_Finalize(endflag=ESMF_END_ABORT)
```

The Array is to cover the exact same index space as in the previous example. Furthermore decomposition and distribution are also kept the same. Hence the same DistGrid object will be created and it is expected to execute this example with 4 PETs.

```
  distgrid = ESMF_DistGridCreate(minIndex=(/1,1/), maxIndex=(/40,10/), rc=rc)
```

This DistGrid describes a 40 x 10 index space that will be decomposed into 4 DEs when executed on 4 PETs, associating 1 DE per PET. Each DE-local exclusive region contains 10 x 10 elements. The DistGrid also stores and provides information about the relationship between DEs in index space, however, DistGrid does not contain information about halos. Arrays contain halo information and it is possible to create multiple Arrays covering the same index space with identical decomposition and distribution using the same DistGrid object, while defining different, Array-specific halo regions.

The extra memory required to cover the halo in the Array object must be taken into account when allocating the PET-local `farrayA` arrays. For a halo of 2 elements in each direction the following allocation will suffice.

```
  allocate(farrayA(14,14))    ! Fortran array with halo: 14 = 10 + 2 * 2
```

The `farrayA` can now be used to create an Array object with enough space for a two element halo in each direction. The Array creation method checks for each PET that the local Fortran array can accommodate the requested regions.

The default behavior of ArrayCreate() is to center the exclusive region within the total region. Consequently the following call will provide the 2 extra elements on each side of the exclusive 10 x 10 region without having to specify any additional arguments.

```
  array = ESMF_ArrayCreate(farray=farrayA, distgrid=distgrid, &
    indexflag=ESMF_INDEX_DELOCAL, rc=rc)
```

The exclusive Array region on each PET can be accessed through a suitable Fortran array pointer. See section 29.2.6 for more details on Array regions.

```
  call ESMF_ArrayGet(array, farrayPtr=farrayPtr, rc=rc)
```

Following Array bounds convention, which by default puts the beginning of the exclusive region at (1, 1, ...), the following loop will add up the values of the local exclusive region for each DE, regardless of how the bounds were chosen for the original PET-local `farrayA` arrays.

```
  localSum = 0.
  do j=1, 10
    do i=1, 10
      localSum = localSum + farrayPtr(i, j)
    enddo
  enddo
```

Elements with i or j in the [-1,0] or [11,12] ranges are located outside the exclusive region and may be used to define extra computational points or halo operations.

Cleanup and shut down ESMF.

```
  call ESMF_ArrayDestroy(array, rc=rc)

  deallocate(farrayA)
  call ESMF_DistGridDestroy(distgrid, rc=rc)

  call ESMF_Finalize(rc=rc)

end program
```

29.2.3 Array from `ESMF_LocalArray`

Alternative to the direct usage of Fortran arrays during Array creation it is also possible to first create an `ESMF_LocalArray` and create the Array from it. While this may seem more burdensome for the 1 DE per PET cases discussed in the previous sections it allows a straightforward generalization to the multiple DE per PET case. The following example first recaptures the previous example using an `ESMF_LocalArray` and then expands to the multiple DE per PET case.

```
program ESMF_ArrayLarrayEx

  use ESMF
  use ESMF_TestMod

  implicit none
```

The current ESMF_LocalArray interface requires Fortran arrays to be defined with pointer attribute.

```
! local variables
real(ESMF_KIND_R8), pointer :: farrayP(:,:)   ! Fortran array pointer
real(ESMF_KIND_R8), pointer :: farrayPtr(:,:) ! matching Fortran array ptr
type(ESMF_LocalArray)       :: larray         ! ESMF_LocalArray object
type(ESMF_LocalArray)       :: larrayRef      ! ESMF_LocalArray object
type(ESMF_DistGrid)         :: distgrid       ! DistGrid object
type(ESMF_Array)            :: array          ! Array object
integer                     :: rc, i, j, de
real(ESMF_KIND_R8)          :: localSum
type(ESMF_LocalArray), allocatable :: larrayList(:) ! LocalArray object list
type(ESMF_LocalArray), allocatable :: larrayRefList(:)!LocalArray obj. list

type(ESMF_VM):: vm
integer:: localPet, petCount


call ESMF_Initialize(vm=vm, defaultlogfilename="ArrayLarrayEx.Log", &
                  logkindflag=ESMF_LOGKIND_MULTI, rc=rc)
if (rc /= ESMF_SUCCESS) call ESMF_Finalize(endflag=ESMF_END_ABORT)
call ESMF_VMGet(vm, localPet=localPet, petCount=petCount, rc=rc)
if (rc /= ESMF_SUCCESS) call ESMF_Finalize(endflag=ESMF_END_ABORT)

if (petCount /= 4) then
  finalrc = ESMF_FAILURE
  goto 10
endif
```

DistGrid and array allocation remains unchanged.

```
distgrid = ESMF_DistGridCreate(minIndex=(/1,1/), maxIndex=(/40,10/), rc=rc)

allocate(farrayP(14,14))    ! allocate Fortran array on each PET with halo
```

Now instead of directly creating an Array object using the PET-local farrayPs an ESMF_LocalArray object will be created on each PET.

```
larray = ESMF_LocalArrayCreate(farrayP, &
             datacopyflag=ESMF_DATACOPY_REFERENCE, rc=rc)
```

The Array object can now be created from larray. The Array creation method checks for each PET that the LocalArray can accommodate the requested regions.

```
array = ESMF_ArrayCreate(localarrayList=(/larray/), distgrid=distgrid, rc=rc)
```

Once created there is no difference in how the Array object can be used. The exclusive Array region on each PET can be accessed through a suitable Fortran array pointer as before.

```
call ESMF_ArrayGet(array, farrayPtr=farrayPtr, rc=rc)
```

Alternatively it is also possible (independent of how the Array object was created) to obtain the reference to the array allocation held by Array in form of an `ESMF_LocalArray` object. The `farrayPtr` can then be extracted using LocalArray methods.

```
call ESMF_ArrayGet(array, localarray=larrayRef, rc=rc)

call ESMF_LocalArrayGet(larrayRef, farrayPtr, rc=rc)
```

Either way the `farrayPtr` reference can be used now to add up the values of the local exclusive region for each DE. The following loop works regardless of how the bounds were chosen for the original PET-local `farrayP` arrays and consequently the PET-local `larray` objects.

```
localSum = 0.
do j=1, 10
  do i=1, 10
    localSum = localSum + farrayPtr(i, j)
  enddo
enddo
print *, "localSum=", localSum
```

Cleanup.

```
call ESMF_ArrayDestroy(array, rc=rc)
call ESMF_LocalArrayDestroy(larray, rc=rc)
deallocate(farrayP)   ! use the pointer that was used in allocate statement
call ESMF_DistGridDestroy(distgrid, rc=rc)
```

While the usage of LocalArrays is unnecessarily cumbersome for 1 DE per PET Arrays, it provides a straightforward path for extending the interfaces to multiple DEs per PET.

In the following example a 8 x 8 index space will be decomposed into 2 x 4 = 8 DEs. The situation is captured by the following DistGrid object.

```
distgrid = ESMF_DistGridCreate(minIndex=(/1,1/), maxIndex=(/8,8/), &
  regDecomp=(/2,4/), rc=rc)
```

The `distgrid` object created in this manner will contain 8 DEs no matter how many PETs are available during execution. Assuming an execution on 4 PETs will result in the following distribution of the decomposition.

```
+---------------------------------------> 2nd dimension
|  (1,1)
|    +-----------+-----------+-----------+-----------+
|    | DE0, PET0 | DE2, PET1 | DE4, PET2 | DE6, PET3 |
|    |  *    *   |  *    *   |  *    *   |  *    *   |
|    |           |           |           |           |
|    |  *    *   |  *    *   |  *    *   |  *    *   |
|    |           |           |           |           |
|    |  *    *   |  *    *   |  *    *   |  *    *   |
|    |           |           |           |           |
|    |  *    *   |  *    *   |  *    *   |  *    *   |
```

```
|     +-----------+-----------+-----------+-----------+
|     | DE1, PET0 | DE3, PET1 | DE5, PET2 | DE7, PET3 |
|     |  *    *   |  *    *   |  *    *   |  *    *   |
|     |           |           |           |           |
|     |  *    *   |  *    *   |  *    *   |  *    *   |
|     |           |           |           |           |
|     |  *    *   |  *    *   |  *    *   |  *    *   |
|     |           |           |           |           |
|     |  *    *   |  *    *   |  *    *   |  *    *   |
|     +-----------+-----------+-----------+-----------+
|                                                   (8,8)
v
1st dimension
```

Obviously each PET is associated with 2 DEs. Each PET must allocate enough space for *all* its DEs. This is done by allocating as many DE-local arrays as there are DEs on the PET. The reference to these array allocations is passed into ArrayCreate via a LocalArray list argument that holds as many elements as there are DEs on the PET. Here each PET must allocate for two DEs.

```
allocate(larrayList(2))   ! 2 DEs per PET
allocate(farrayP(4, 2))   ! without halo each DE is of size 4 x 2
farrayP = 123.456d0
larrayList(1) = ESMF_LocalArrayCreate(farrayP, &
  datacopyflag=ESMF_DATACOPY_REFERENCE, rc=rc) !1st DE
allocate(farrayP(4, 2))   ! without halo each DE is of size 4 x 2
farrayP = 456.789d0
larrayList(2) = ESMF_LocalArrayCreate(farrayP, &
  datacopyflag=ESMF_DATACOPY_REFERENCE, rc=rc) !2nd DE
```

Notice that it is perfectly fine to *re*-use `farrayP` for all allocations of DE-local Fortran arrays. The allocated memory can be deallocated at the end using the array pointer contained in the `larrayList`.

With this information an Array object can be created. The `distgrid` object indicates 2 DEs for each PET and ArrayCreate() expects to find two LocalArray elements in `larrayList`.

```
array = ESMF_ArrayCreate(localarrayList=larrayList, distgrid=distgrid, rc=rc)
```

Usage of a LocalArray list is the only way to provide a list of variable length of Fortran array allocations to ArrayCreate() for each PET. The `array` object created by the above call is an ESMF distributed object. As such it must follow the ESMF convention that requires that the call to `ESMF_ArrayCreate()` must be issued in unison by all PETs of the current context. Each PET only calls ArrayCreate() once, even if there are multiple DEs per PET.

The ArrayGet() method provides access to the list of LocalArrays on each PET.

```
allocate(larrayRefList(2))
call ESMF_ArrayGet(array, localarrayList=larrayRefList, rc=rc)
```

Finally, access to the actual Fortran pointers is done on a per DE basis. Generally each PET will loop over its DEs.

```
do de=1, 2
  call ESMF_LocalArrayGet(larrayRefList(de), farrayPtr, rc=rc)
```

```
    localSum = 0.
    do j=1, 2
      do i=1, 4
        localSum = localSum + farrayPtr(i, j)
      enddo
    enddo
    print *, "localSum=", localSum
  enddo
```

Note: If the VM associates multiple PEs with a PET the application writer may decide to use OpenMP loop parallelization on the `de` loop.

Cleanup requires that the PET-local deallocations are done before the pointers to the actual Fortran arrays are lost. Notice that `larrayList` is used to obtain the pointers used in the deallocate statement. Pointers obtained from the `larrayRefList`, while pointing to the same data, *cannot* be used to deallocate the array allocations!

```
  do de=1, 2
    call ESMF_LocalArrayGet(larrayList(de), farrayPtr, rc=rc)

    deallocate(farrayPtr)
    call ESMF_LocalArrayDestroy(larrayList(de), rc=rc)

  enddo
  deallocate(larrayList)
  deallocate(larrayRefList)
  call ESMF_ArrayDestroy(array, rc=rc)
  if (rc /= ESMF_SUCCESS) call ESMF_Finalize(endflag=ESMF_END_ABORT)
  call ESMF_DistGridDestroy(distgrid, rc=rc)
  if (rc /= ESMF_SUCCESS) call ESMF_Finalize(endflag=ESMF_END_ABORT)
```

With that ESMF can be shut down cleanly.

```
  call ESMF_Finalize(rc=rc)


end program
```

29.2.4 Create Array with automatic memory allocation

In the examples of the previous sections the user provided memory allocations for each of the DE-local regions for an Array object. The user was able to use any of the Fortran methods to allocate memory, or go through the `ESMF_LocalArray` interfaces to obtain memory allocations before passing them into ArrayCreate(). Alternatively ESMF offers methods that handle Array memory allocations inside the library.

As before, to create an `ESMF_Array` object an `ESMF_DistGrid` must be created. The DistGrid object holds information about the entire index space and how it is decomposed into DE-local exclusive regions. The following line of code creates a DistGrid for a 5x5 global index space that is decomposed into 2 x 3 = 6 DEs.

```
  distgrid = ESMF_DistGridCreate(minIndex=(/1,1/), maxIndex=(/5,5/), &
    regDecomp=(/2,3/), rc=rc)
```

The following is a representation of the index space and its decomposition into DEs. Each asterisk (*) represents a single element.

```
 +---------------------------------------> 2nd dimension
 |  (1,1)
 |    +-----------+-----------+------+
 |    | DE 0      | DE 2      | DE 4 |
 |    |           |           |      |
 |    |  *    *   |  *    *   |  *   |
 |    |           |           |      |
 |    |  *    *   |  *    *   |  *   |
 |    |           |           |      |
 |    |  *    *   |  *    *   |  *   |
 |    +-----------+-----------+------+
 |    |           |           |      |
 |    | DE 1      | DE 3      | DE 5 |
 |    |           |           |      |
 |    |  *    *   |  *    *   |  *   |
 |    |           |           |      |
 |    |  *    *   |  *    *   |  *   |
 |    +-----------+-----------+------+
 |                                 (5,5)
 v
1st dimension
```

Besides the DistGrid it is the *type, kind* and *rank* information, "tkr" for short, that is required to create an Array object. It turns out that the rank of the Array object is fully determined by the DistGrid and other (optional) arguments passed into ArrayCreate(), so that explicit specification of the Array rank is redundant.

The simplest way to supply the type and kind information of the Array is directly through the `typekind` argument. Here a double precision Array is created on the previously created DistGrid. Since no other arguments are specified that could alter the rank of the Array it becomes equal to the dimCount of the DistGrid, i.e a 2D Array is created on top of the DistGrid.

```
array = ESMF_ArrayCreate(typekind=ESMF_TYPEKIND_R8, distgrid=distgrid, rc=rc)
```

The different methods on how an Array object is created have no effect on the use of `ESMF_ArrayDestroy()`.

```
call ESMF_ArrayDestroy(array, rc=rc)
```

Alternatively the same Array can be created specifying the "tkr" information in form of an ArraySpec variable. The ArraySpec explicitly contains the Array rank and thus results in an over specification on the ArrayCreate() interface. ESMF checks all input information for consistency and returns appropriate error codes in case any inconsistencies are found.

```
call ESMF_ArraySpecSet(arrayspec, typekind=ESMF_TYPEKIND_R8, rank=2, rc=rc)

array = ESMF_ArrayCreate(arrayspec=arrayspec, distgrid=distgrid, rc=rc)
```

The Array object created by the above call is an ESMF distributed object. As such it must follow the ESMF convention that requires that the call to `ESMF_ArrayCreate()` must be issued in unison by all PETs of the current context.

29.2.5 Native language memory access

There are two different methods by which the user can access the data held inside an ESMF Array object. The first method provides direct access to a native language array object. Specifically, the `farrayPtr` argument returned by `ESMF_ArrayGet()` is a Fortran array pointer that can be used to access the PET-local data inside the Array object.

Many applications work in the 1 DE per PET mode, with exactly one DE on every PET. Accessing the Array memory on each PET for this situation is especially simple as is shown in section 29.2.1. However, the Array class is not restricted to the special 1 DE per PET case, but supports multiple separate memory allocations on each PET. The number of such PET-local allocations is given by the `localDeCount`, i.e. there is one memory allocation for every DE that is associated with the local PET.

Access to a specific local memory allocation of an Array object is still accomplished by returning the `farrayPtr` argument. However, for $localDeCount > 1$ the formally optional `localDe` argument to `ESMF_ArrayGet()` turns into a practically required argument. While in general the `localDe` in ESMF is simply a local index variable that enumerates the DEs that are associated with the local PET (e.g. see section 51.3.7), the bounds of this index variable are strictly defined as `[0,...,localDeCount-1]` when it is used as an input argument. The following code demonstrates this.

First query the Array for `localDeCount`. This number may be different on each PET and indicates how many DEs are mapped against the local PET.

```
call ESMF_ArrayGet(array, localDeCount=localDeCount, rc=rc)
```

Looping the `localDe` index variable from 0 to `localDeCount-1` allows access to each of the local memory allocations of the Array object:

```
do localDe=0, localDeCount-1
  call ESMF_ArrayGet(array, farrayPtr=myFarray, localDe=localDe, rc=rc)

  ! use myFarray to access local DE data
enddo
```

The second method to access the memory allocations in an Array object is to go through the ESMF LocalArray object. To this end the Array is queried for a list of PET-local LocalArray objects. The LocalArray objects in the list correspond to the DEs on the local PET. Here the `localDe` argument is solely a user level index variable, and in principle the lower bound can be chosen freely. However, for better alignment with the previous case (where `localDe` served as an input argument to an ESMF method) the following example again fixes the lower bound at zero.

```
allocate(larrayList(0:localDeCount-1))
call ESMF_ArrayGet(array, localarrayList=larrayList, rc=rc)

do localDe=0, localDeCount-1
  call ESMF_LocalArrayGet(larrayList(localDe), myFarray, &
     datacopyflag=ESMF_DATACOPY_REFERENCE, rc=rc)

  ! use myFarray to access local DE data
enddo
```

See section 29.2.3 for more on LocalArray usage in Array. In most cases memory access through a LocalArray list is less convenient than the direct `farrayPtr` method because it adds an extra object level between the ESMF Array and the native language array.

29.2.6 Regions and default bounds

Each `ESMF_Array` object is decomposed into DEs as specified by the associated `ESMF_DistGrid` object. Each piece of this decomposition, i.e. each DE, holds a chunk of the Array data in its own local piece of memory. The details of the Array decomposition are described in the following paragraphs.

At the center of the Array decomposition is the `ESMF_DistGrid` class. The DistGrid object specified during Array creation contains three essential pieces of information:

- The extent and topology of the global domain covered by the Array object in terms of indexed elements. The total extent may be a composition of smaller logically rectangular (LR) domain pieces called tiles.
- The decomposition of the entire domain into "element exclusive" DE-local LR chunks. *Element exclusive* means that there is no element overlap between DE-local chunks. This, however, does not exclude degeneracies on edge boundaries for certain topologies (e.g. bipolar).
- The layout of DEs over the available PETs and thus the distribution of the Array data.

Each element of an Array is associated with a *single* DE. The union of elements associated with a DE, as defined by the DistGrid above, corresponds to a LR chunk of index space, called the *exclusive region* of the DE.

There is a hierarchy of four regions that can be identified for each DE in an Array object. Their definition and relationship to each other is as follows:

- *Interior Region*: Region that only contains local elements that are *not* mapped into the halo of any other DE. The shape and size of this region for a particular DE depends non-locally on the halos defined by other DEs and may change during computation as halo operations are precomputed and released. Knowledge of the interior elements may be used to improve performance by overlapping communications with ongoing computation for a DE.
- *Exclusive Region*: Elements for which a DE claims exclusive ownership. Practically this means that the DE will be the sole source for these elements in halo and reduce operations. There are exceptions to this in some topologies. The exclusive region includes all elements of the interior region.
- *Computational Region*: Region that can be set arbitrarily within the bounds of the total region (defined next). The typical use of the computation region is to define bounds that only include elements that are updated by a DE-local computation kernel. The computational region does not need to include all exclusive elements and it may also contain elements that lie outside the exclusive region.
- *Total (Memory) Region*: Total of all DE-locally allocated elements. The size and shape of the total memory region must accommodate the union of exclusive and computational region but may contain additional elements. Elements outside the exclusive region may overlap with the exclusive region of another DE which makes them potential receivers for Array halo operations. Elements outside the exclusive region that do not overlap with the exclusive region of another DE can be used to set boundary conditions and/or serve as extra memory padding.

```
+-totalLBound(:)-----------------------------------+
|\                                                 |
| \ <--- totalLWidth(:)                            |
|  \                                               |
|   +-computationalLBound(:)------------------+    |
|   |\                                        |    |
|   | \ <--- computationalLWidth(:)           |    |
|   |  \                                      |    |
|   |   +-exclusiveLBound(:)-------------+    |    |
|   |   |                                |    |    |
```

```
|   |   |     +------+      +-----+      |    |   |
|   |   |     |      |      |     |      |    |   |
|   |   |     |      +------+     |      |    |   |
|   |   |     | "Interior Region" |      |    |   |
|   |   |     +-----+             |      |    |   |
|   |   |           |             |      |    |   |
|   |   |           +-------------+      |    |   |
|   |   |                                |    |   |
|   |   | "Exclusive Region"             |    |   |
|   |   +-------------exclusiveUBound(:)-+    |   |
|   |                                     \   |   |
|   |           computationalUWidth(:) --> \  |   |
|   |                                       \ |   |
|   | "Computational Region"                 \|   |
|   +------------------computationalUBound(:)-+   |
|                                             \   |
|                            totalUWidth(:) -> \  |
| "Total Region"                                \|
+--------------------------------- totalUBound(:)-+
```

With the following definitions:

```
computationalLWidth(:) = exclusiveLBound(:) - computationalLBound(:)
computationalUWidth(:) = computationalUBound(:) - exclusiveUBound(:)
```

and

```
totalLWidth(:) = exclusiveLBound(:) - totalLBound(:)
totalUWidth(:) = totalUBound(:) - exclusiveUBound(:)
```

The *exclusive region* is determined during Array creation by the DistGrid argument. Optional arguments may be used to specify the *computational region* when the Array is created, by default it will be set equal to the exclusive region. The *total region*, i.e. the actual memory allocation for each DE, is also determined during Array creation. When creating the Array object from existing Fortran arrays the total region is set equal to the memory provided by the Fortran arrays. Otherwise the default is to allocate as much memory as is needed to accommodate the union of the DE-local exclusive and computational region. Finally it is also possible to use optional arguments to the ArrayCreate() call to specify the total region of the object explicitly.

The `ESMF_ArrayCreate()` call checks that the input parameters are consistent and will result in an Array that fulfills all of the above mentioned requirements for its DE-local regions.

Once an Array object has been created the exclusive and total regions are fixed. The computational region, however, may be adjusted within the limits of the total region using the `ArraySet()` call.

The *interior region* is very different from the other regions in that it cannot be specified. The *interior region* for each DE is a *consequence* of the choices made for the other regions collectively across all DEs into which an Array object is decomposed. An Array object can be queried for its DE-local *interior regions* as to offer additional information to the user necessary to write more efficient code.

By default the bounds of each DE-local *total region* are defined as to put the start of the DE-local *exclusive region* at the "origin" of the local index space, i.e. at `(1, 1, ..., 1)`. With that definition the following loop will access each element of the DE-local memory segment for each PET-local DE of the Array object used in the previous sections and print its content.

```
  do localDe=0, localDeCount-1
    call ESMF_LocalArrayGet(larrayList(localDe), myFarray, &
       datacopyflag=ESMF_DATACOPY_REFERENCE, rc=rc)
    do i=1, size(myFarray, 1)
      do j=1, size(myFarray, 2)
        print *, "localPET=", localPet, " localDE=", &
            localDe, ": array(",i,",",j,")=", myFarray(i,j)
      enddo
    enddo
  enddo
```

29.2.7 Array bounds

The loop over Array elements at the end of the last section only works correctly because of the default definition of the *computational* and *total regions* used in the example. In general, without such specific knowledge about an Array object, it is necessary to use a more formal approach to access its regions with DE-local indices.

The DE-local *exclusive region* takes a central role in the definition of Array bounds. Even as the *computational region* may adjust during the course of execution the *exclusive region* remains unchanged. The *exclusive region* provides a unique reference frame for the index space of all Arrays associated with the same DistGrid.

There is a choice between two indexing options that needs to be made during Array creation. By default each DE-local exclusive region starts at `(1, 1, ..., 1)`. However, for some computational kernels it may be more convenient to choose the index bounds of the DE-local exclusive regions to match the index space coordinates as they are defined in the corresponding DistGrid object. The second option is only available if the DistGrid object does not contain any non-contiguous decompositions (such as cyclically decomposed dimensions).

The following example code demonstrates the safe way of dereferencing the DE-local exclusive regions of the previously created `array` object.

```
  allocate(exclusiveUBound(2, 0:localDeCount-1))  ! dimCount=2
  allocate(exclusiveLBound(2, 0:localDeCount-1))  ! dimCount=2
  call ESMF_ArrayGet(array, indexflag=indexflag, &
    exclusiveLBound=exclusiveLBound, exclusiveUBound=exclusiveUBound, rc=rc)
  if (indexflag == ESMF_INDEX_DELOCAL) then
    ! this is the default
!    print *, "DE-local exclusive regions start at (1,1)"
    do localDe=0, localDeCount-1
      call ESMF_LocalArrayGet(larrayList(localDe), myFarray, &
          datacopyflag=ESMF_DATACOPY_REFERENCE, rc=rc)
      do i=1, exclusiveUBound(1, localDe)
        do j=1, exclusiveUBound(2, localDe)
!          print *, "DE-local exclusive region for localDE=", localDe, &
!            ": array(",i,",",j,")=", myFarray(i,j)
        enddo
      enddo
    enddo
  else if (indexflag == ESMF_INDEX_GLOBAL) then
    ! only if set during ESMF_ArrayCreate()
!    print *, "DE-local exclusive regions of this Array have global bounds"
```

```
    do localDe=0, localDeCount-1
      call ESMF_LocalArrayGet(larrayList(localDe), myFarray, &
         datacopyflag=ESMF_DATACOPY_REFERENCE, rc=rc)
      do i=exclusiveLBound(1, localDe), exclusiveUBound(1, localDe)
        do j=exclusiveLBound(2, localDe), exclusiveUBound(2, localDe)
!          print *, "DE-local exclusive region for localDE=", localDe, &
!            ": array(",i,",",j,")=", myFarray(i,j)
        enddo
      enddo
    enddo
  endif
  call ESMF_ArrayDestroy(array, rc=rc) ! destroy the array object
```

Obviously the second branch of this simple code will work for either case, however, if a complex computational kernel was written assuming `ESMF_INDEX_DELOCAL` type bounds the second branch would simply be used to indicate the problem and bail out.

The advantage of the `ESMF_INDEX_GLOBAL` index option is that the Array bounds directly contain information on where the DE-local Array piece is located in a global index space sense. When the `ESMF_INDEX_DELOCAL` option is used the correspondence between local and global index space must be made by querying the associated DistGrid for the DE-local `indexList` arguments.

29.2.8 Computational region and extra elements for halo or padding

In the previous examples the computational region of `array` was chosen by default to be identical to the exclusive region defined by the DistGrid argument during Array creation. In the following the same `arrayspec` and `distgrid` objects as before will be used to create an Array but now a larger computational region shall be defined around each DE-local exclusive region. Furthermore, extra space will be defined around the computational region of each DE to accommodate a halo and/or serve as memory padding.

In this example the `indexflag` argument is set to `ESMF_INDEX_GLOBAL` indicating that the bounds of the exclusive region correspond to the index space coordinates as they are defined by the DistGrid object.

The same `arrayspec` and `distgrid` objects as before are used which also allows the reuse of the already allocated `larrayList` variable.

```
  array = ESMF_ArrayCreate(arrayspec=arrayspec, distgrid=distgrid, &
    computationalLWidth=(/0,3/), computationalUWidth=(/1,1/), &
    totalLWidth=(/1,4/), totalUWidth=(/3,1/), &
    indexflag=ESMF_INDEX_GLOBAL, rc=rc)
```

Obtain the `larrayList` on every PET.

```
  allocate(localDeToDeMap(0:localDeCount-1))
  call ESMF_ArrayGet(array, localarrayList=larrayList, &
    localDeToDeMap=localDeToDeMap, rc=rc)
```

The bounds of DE 1 for `array` are shown in the following diagram to illustrate the situation. Notice that the `totalLWidth` and `totalUWidth` arguments in the ArrayCreate() call define the total region with respect to the exclusive region given for each DE by the `distgrid` argument.

```
        +-(3,-3)---------------------------------+
        |\                                       |
```

```
| +-(4,-2)-+-(4,1)--------------------+--+
| |        |                          |  |
| |        |                          |  |
| |        |          DE 1            |  |
| |        |                          |  |
| |        |                          |  |
| |        | Exclusive Region         |  |
| |        +--------------------(5,2)-+  |
| | Computational Region                 |
| +------------------------------(6,3)--+
|                                        |
| Total Region                           |
+---------------------------------(8,3)--+
```

When working with this `array` it is possible for the computational kernel to overstep the exclusive region for both read/write access (computational region) and potentially read-only access into the total region outside of the computational region, if a halo operation provides valid entries for these elements.

The Array object can be queried for absolute *bounds*

```
allocate(computationalLBound(2, 0:localDeCount-1))  ! dimCount=2
allocate(computationalUBound(2, 0:localDeCount-1))  ! dimCount=2
allocate(totalLBound(2, 0:localDeCount-1))          ! dimCount=2
allocate(totalUBound(2, 0:localDeCount-1))          ! dimCount=2
call ESMF_ArrayGet(array, exclusiveLBound=exclusiveLBound, &
  exclusiveUBound=exclusiveUBound, &
  computationalLBound=computationalLBound, &
  computationalUBound=computationalUBound, &
  totalLBound=totalLBound, &
  totalUBound=totalUBound, rc=rc)
```

or for the relative *widths*.

```
allocate(computationalLWidth(2, 0:localDeCount-1))  ! dimCount=2
allocate(computationalUWidth(2, 0:localDeCount-1))  ! dimCount=2
allocate(totalLWidth(2, 0:localDeCount-1))          ! dimCount=2
allocate(totalUWidth(2, 0:localDeCount-1))          ! dimCount=2
call ESMF_ArrayGet(array, computationalLWidth=computationalLWidth, &
  computationalUWidth=computationalUWidth, totalLWidth=totalLWidth, &
  totalUWidth=totalUWidth, rc=rc)
```

Either way the dereferencing of Array data is centered around the DE-local exclusive region:

```
  do localDe=0, localDeCount-1
    call ESMF_LocalArrayGet(larrayList(localDe), myFarray, &
       datacopyflag=ESMF_DATACOPY_REFERENCE, rc=rc)
    ! initialize the DE-local array
    myFarray = 0.1d0 * localDeToDeMap(localDe)
    ! first time through the total region of array
!    print *, "myFarray bounds for DE=", localDeToDeMap(localDe), &
!      lbound(myFarray),  ubound(myFarray)
    do j=exclusiveLBound(2, localDe), exclusiveUBound(2, localDe)
```

```
      do i=exclusiveLBound(1, localDe), exclusiveUBound(1, localDe)
!        print *, "Excl region DE=", localDeToDeMap(localDe), &
!        ": array(",i,",",j,")=",  myFarray(i,j)
      enddo
    enddo
    do j=computationalLBound(2, localDe), computationalUBound(2, localDe)
      do i=computationalLBound(1, localDe), computationalUBound(1, localDe)
!        print *, "Excl region DE=", localDeToDeMap(localDe), &
!        ": array(",i,",",j,")=", myFarray(i,j)
      enddo
    enddo
    do j=totalLBound(2, localDe), totalUBound(2, localDe)
      do i=totalLBound(1, localDe), totalUBound(1, localDe)
!        print *, "Total region DE=", localDeToDeMap(localDe), &
!        ": array(",i,",",j,")=", myFarray(i,j)
      enddo
    enddo

    ! second time through the total region of array
    do j=exclusiveLBound(2, localDe)-totalLWidth(2, localDe), &
      exclusiveUBound(2, localDe)+totalUWidth(2, localDe)
      do i=exclusiveLBound(1, localDe)-totalLWidth(1, localDe), &
        exclusiveUBound(1, localDe)+totalUWidth(1, localDe)
!        print *, "Excl region DE=", localDeToDeMap(localDe), &
!        ": array(",i,",",j,")=", myFarray(i,j)
      enddo
    enddo
  enddo
```

29.2.9 Create 1D and 3D Arrays

All previous examples were written for the 2D case. There is, however, no restriction within the Array or DistGrid class that limits the dimensionality of Array objects beyond the language-specific limitations (7D for Fortran).

In order to create an `n`-dimensional Array the rank indicated by both the `arrayspec` and the `distgrid` arguments specified during Array create must be equal to `n`. A 1D Array of double precision real data hence requires the following `arrayspec`.

```
  call ESMF_ArraySpecSet(arrayspec, typekind=ESMF_TYPEKIND_R8, rank=1, rc=rc)
```

The index space covered by the Array and the decomposition description is provided to the Array create method by the `distgrid` argument. The index space in this example has 16 elements and covers the interval $[-10, 5]$. It is decomposed into as many DEs as there are PETs in the current context.

```
  distgrid1D = ESMF_DistGridCreate(minIndex=(/-10/), maxIndex=(/5/), &
    regDecomp=(/petCount/), rc=rc)
```

A 1D Array object with default regions can now be created.

```
  array1D = ESMF_ArrayCreate(arrayspec=arrayspec, distgrid=distgrid1D, rc=rc)
```

The creation of a 3D Array proceeds analogous to the 1D case. The rank of the `arrayspec` must be changed to 3

```
call ESMF_ArraySpecSet(arrayspec, typekind=ESMF_TYPEKIND_R8, rank=3, rc=rc)
```

and an appropriate 3D DistGrid object must be created

```
distgrid3D = ESMF_DistGridCreate(minIndex=(/1,1,1/), &
  maxIndex=(/16,16,16/), regDecomp=(/4,4,4/), rc=rc)
```

before an Array object can be created.

```
array3D = ESMF_ArrayCreate(arrayspec=arrayspec, distgrid=distgrid3D, rc=rc)
```

The `distgrid3D` object decomposes the 3-dimensional index space into $4 \times 4 \times 4 = 64$ DEs. These DEs are laid out across the computational resources (PETs) of the current component according to a default DELayout that is created during the DistGrid create call. Notice that in the index space proposal a DELayout does not have a sense of dimensionality. The DELayout function is simply to map DEs to PETs. The DistGrid maps chunks of index space against DEs and thus its rank is equal to the number of index space dimensions.

The previously defined DistGrid and the derived Array object decompose the index space along all three dimension. It is, however, not a requirement that the decomposition be along all dimensions. An Array with the same 3D index space could as well be decomposed along just one or along two of the dimensions. The following example shows how for the same index space only the last two dimensions are decomposed while the first Array dimension has full extent on all DEs.

```
call ESMF_ArrayDestroy(array3D, rc=rc)
call ESMF_DistGridDestroy(distgrid3D, rc=rc)
distgrid3D = ESMF_DistGridCreate(minIndex=(/1,1,1/), &
  maxIndex=(/16,16,16/), regDecomp=(/1,4,4/), rc=rc)
array3D = ESMF_ArrayCreate(arrayspec=arrayspec, distgrid=distgrid3D, rc=rc)
```

29.2.10 Working with Arrays of different rank

Assume a computational kernel that involves the `array3D` object as it was created at the end of the previous section. Assume further that the kernel also involves a 2D Array on a 16x16 index space where each point (j,k) was interacting with each (i,j,k) column of the 3D Array. An efficient formulation would require that the decomposition of the 2D Array must match that of the 3D Array and further the DELayout be identical. The following code shows how this can be accomplished.

```
call ESMF_DistGridGet(distgrid3D, delayout=delayout, rc=rc) ! get DELayout
distgrid2D = ESMF_DistGridCreate(minIndex=(/1,1/), maxIndex=(/16,16/), &
  regDecomp=(/4,4/), delayout=delayout, rc=rc)
call ESMF_ArraySpecSet(arrayspec, typekind=ESMF_TYPEKIND_R8, rank=2, rc=rc)
array2D = ESMF_ArrayCreate(arrayspec=arrayspec, distgrid=distgrid2D, rc=rc)
```

Now the following kernel is sure to work with `array3D` and `array2D`.

```
call ESMF_DELayoutGet(delayout, localDeCount=localDeCount, rc=rc)
allocate(larrayList1(0:localDeCount-1))
call ESMF_ArrayGet(array3D, localarrayList=larrayList1, rc=rc)
allocate(larrayList2(0:localDeCount-1))
call ESMF_ArrayGet(array2D, localarrayList=larrayList2, rc=rc)
do localDe=0, localDeCount-1
```

```
    call ESMF_LocalArrayGet(larrayList1(localDe), myFarray3D, &
      datacopyflag=ESMF_DATACOPY_REFERENCE, rc=rc)
    myFarray3D = 0.1d0 * localDe ! initialize
    call ESMF_LocalArrayGet(larrayList2(localDe), myFarray2D, &
      datacopyflag=ESMF_DATACOPY_REFERENCE, rc=rc)
    myFarray2D = 0.5d0 * localDe ! initialize
    do k=1, 4
      do j=1, 4
        dummySum = 0.d0
        do i=1, 16
          dummySum = dummySum + myFarray3D(i,j,k) ! sum up the (j,k) column
        enddo
        dummySum = dummySum * myFarray2D(j,k) ! multiply with local 2D element
!        print *, "dummySum(",j,k,")=",dummySum
      enddo
    enddo
  enddo
```

29.2.11 Arrays with undistributed dimensions

Except for the special Array create interface that implements a copy from an existing Array object all other Array create interfaces require the specification of at least two arguments: `farray` and `distgrid`, `larrayList` and `distgrid`, or `arrayspec` and `distgrid`. In all these cases both required arguments contain a sense of dimensionality. The relationship between these two arguments deserves extra attention.

The first argument, `farray`, `larrayList` or `arrayspec`, determines the rank of the created Array object, i.e. the dimensionality of the actual data storage. The rank of a native language array, extracted from an Array object, is equal to the rank specified by either of these arguments. So is the `rank` that is returned by the `ESMF_ArrayGet()` call.

The rank specification contained in the `distgrid` argument, which is of type `ESMF_DistGrid`, on the other hand has no effect on the rank of the Array. The `dimCount` specified by the DistGrid object, which may be equal, greater or less than the Array rank, determines the dimensionality of the *decomposition*.

While there is no constraint between DistGrid `dimCount` and Array `rank`, there is an important relationship between the two, resulting in the concept of index space dimensionality. Array dimensions can be arbitrarily mapped against DistGrid dimension, rendering them *decomposed* dimensions. The index space dimensionality is equal to the number of decomposed Array dimensions.

Array dimensions that are not mapped to DistGrid dimensions are the *undistributed* dimensions of the Array. They are not part of the index space. The mapping is specified during `ESMF_ArrayCreate()` via the `distgridToArrayMap` argument. DistGrid dimensions that have not been associated with Array dimensions are *replicating* dimensions. The Array will be replicated across the DEs that lie along replication DistGrid dimensions.

Undistributed Array dimensions can be used to store multi-dimensional data for each Array index space element. One application of this is to store the components of a vector quantity in a single Array. The same 2D `distgrid` object as before will be used.

```
distgrid = ESMF_DistGridCreate(minIndex=(/1,1/), maxIndex=(/5,5/), &
  regDecomp=(/2,3/), rc=rc)
```

The rank in the `arrayspec` argument, however, must change from 2 to 3 in order to provide for the extra Array dimension.

```
call ESMF_ArraySpecSet(arrayspec, typekind=ESMF_TYPEKIND_R8, rank=3, rc=rc)
```

During Array creation with extra dimension(s) it is necessary to specify the bounds of these undistributed dimension(s). This requires two additional arguments, `undistLBound` and `undistUBound`, which are vectors in order to accommodate multiple undistributed dimensions. The other arguments remain unchanged and apply across all undistributed components.

```
array = ESMF_ArrayCreate(arrayspec=arrayspec, distgrid=distgrid, &
  totalLWidth=(/0,1/), totalUWidth=(/0,1/), &
  undistLBound=(/1/), undistUBound=(/2/), rc=rc)
if (rc /= ESMF_SUCCESS) call ESMF_Finalize(endflag=ESMF_END_ABORT)
```

This will create `array` with 2+1 dimensions. The 2D DistGrid is used to describe decomposition into DEs with 2 Array dimensions mapped to the DistGrid dimensions resulting in a 2D index space. The extra Array dimension provides storage for multi component user data within the Array object.

By default the `distgrid` dimensions are associated with the first Array dimensions in sequence. For the example above this means that the first 2 Array dimensions are decomposed according to the provided 2D DistGrid. The 3rd Array dimension does not have an associated DistGrid dimension, rendering it an undistributed Array dimension.

Native language access to an Array with undistributed dimensions is in principle the same as without extra dimensions.

```
call ESMF_ArrayGet(array, localDeCount=localDeCount, rc=rc)
allocate(larrayList(0:localDeCount-1))
call ESMF_ArrayGet(array, localarrayList=larrayList, rc=rc)
```

The following loop shows how a Fortran pointer to the DE-local data chunks can be obtained and used to set data values in the exclusive regions. The `myFarray3D` variable must be of rank 3 to match the Array rank of `array`. However, variables such as `exclusiveUBound` that store the information about the decomposition, remain to be allocated for the 2D index space.

```
call ESMF_ArrayGet(array, exclusiveLBound=exclusiveLBound, &
  exclusiveUBound=exclusiveUBound, rc=rc)
do localDe=0, localDeCount-1
  call ESMF_LocalArrayGet(larrayList(localDe), myFarray3D, &
     datacopyflag=ESMF_DATACOPY_REFERENCE, rc=rc)
  myFarray3D = 0.0 ! initialize
  myFarray3D(exclusiveLBound(1,localDe):exclusiveUBound(1,localDe), &
    exclusiveLBound(2,localDe):exclusiveUBound(2,localDe), &
    1) = 5.1 ! dummy assignment
  myFarray3D(exclusiveLBound(1,localDe):exclusiveUBound(1,localDe), &
    exclusiveLBound(2,localDe):exclusiveUBound(2,localDe), &
    2) = 2.5 ! dummy assignment
enddo
deallocate(larrayList)
```

For some applications the default association rules between DistGrid and Array dimensions may not satisfy the user's needs. The optional `distgridToArrayMap` argument can be used during Array creation to explicitly specify the mapping between DistGrid and Array dimensions. To demonstrate this the following lines of code reproduce the above example but with rearranged dimensions. Here the `distgridToArrayMap` argument is a list with two elements corresponding to the DistGrid `dimCount` of 2. The first element indicates which Array dimension the first DistGrid dimension is mapped against. Here the 1st DistGrid dimension maps against the 3rd Array dimension and the 2nd DistGrid dimension maps against the 1st Array dimension. This leaves the 2nd Array dimension to be the extra and undistributed dimension in the resulting Array object.

```
call ESMF_ArrayDestroy(array, rc=rc)
```

```
array = ESMF_ArrayCreate(arrayspec=arrayspec, distgrid=distgrid, &
  distgridToArrayMap=(/3, 1/), totalLWidth=(/0,1/), totalUWidth=(/0,1/), &
  undistLBound=(/1/), undistUBound=(/2/), rc=rc)
```

Operations on the Array object as a whole are unchanged by the different mapping of dimensions.

When working with Arrays that contain explicitly mapped Array and DistGrid dimensions it is critical to know the order in which the entries of *width* and *bound* arguments that are associated with distributed Array dimensions are specified. The size of these arguments is equal to the DistGrid `dimCount`, because the maximum number of distributed Array dimensions is given by the dimensionality of the index space.

The order of dimensions in these arguments, however, is *not* that of the associated DistGrid. Instead each entry corresponds to the distributed Array dimensions in sequence. In the example above the entries in `totalLWidth` and `totalUWidth` correspond to Array dimensions 1 and 3 in this sequence.

The `distgridToArrrayMap` argument optionally provided during Array create indicates how the DistGrid dimensions map to Array dimensions. The inverse mapping, i.e. Array to DistGrid dimensions, is just as important. The `ESMF_ArrayGet()` call offers both mappings as `distgridToArrrayMap` and `arrayToDistGridMap`, respectively. The number of elements in `arrayToDistGridMap` is equal to the rank of the Array. Each element corresponds to an Array dimension and indicates the associated DistGrid dimension by an integer number. An entry of "0" in `arrayToDistGridMap` indicates that the corresponding Array dimension is undistributed.

Correct understanding about the association between Array and DistGrid dimensions becomes critical for correct data access into the Array.

```
allocate(arrayToDistGridMap(3))  ! arrayRank = 3
call ESMF_ArrayGet(array, arrayToDistGridMap=arrayToDistGridMap, &
  exclusiveLBound=exclusiveLBound, exclusiveUBound=exclusiveUBound, &
  localDeCount=localDeCount, rc=rc)
if (arrayToDistGridMap(2) /= 0) then   ! check if extra dimension at
  ! expected index indicate problem and bail out
endif
! obtain larrayList for local DEs
allocate(larrayList(0:localDeCount-1))
call ESMF_ArrayGet(array, localarrayList=larrayList, rc=rc)
do localDe=0, localDeCount-1
  call ESMF_LocalArrayGet(larrayList(localDe), myFarray3D, &
     datacopyflag=ESMF_DATACOPY_REFERENCE, rc=rc)
  myFarray3D(exclusiveLBound(1,localDe):exclusiveUBound(1,localDe), &
    1, exclusiveLBound(2,localDe):exclusiveUBound(2, &
    localDe)) = 10.5 !dummy assignment
  myFarray3D(exclusiveLBound(1,localDe):exclusiveUBound(1,localDe), &
    2, exclusiveLBound(2,localDe):exclusiveUBound(2, &
    localDe)) = 23.3 !dummy assignment
enddo
deallocate(exclusiveLBound, exclusiveUBound)
deallocate(arrayToDistGridMap)
deallocate(larrayList)
call ESMF_ArrayDestroy(array, rc=rc)
if (rc /= ESMF_SUCCESS) call ESMF_Finalize(endflag=ESMF_END_ABORT)
```

29.2.12 Arrays with replicated dimensions

Thus far most examples demonstrated cases where the DistGrid `dimCount` was equal to the Array `rank`. The previous section introduced the concept of Array *tensor* dimensions when `dimCount < rank`. In this section

dimCount and rank are assumed completely unconstrained and the relationship to distgridToArrayMap and arrayToDistGridMap will be discussed.

The Array class allows completely arbitrary mapping between Array and DistGrid dimensions. Most cases considered in the previous sections used the default mapping which assigns the DistGrid dimensions in sequence to the lower Array dimensions. Extra Array dimensions, if present, are considered non-distributed tensor dimensions for which the optional undistLBound and undistUBound arguments must be specified.

The optional distgridToArrayMap argument provides the option to override the default DistGrid to Array dimension mapping. The entries of the distgridToArrayMap array correspond to the DistGrid dimensions in sequence and assign a unique Array dimension to each DistGrid dimension. DistGrid and Array dimensions are indexed starting at 1 for the lowest dimension. A value of "0" in the distgridToArrayMap array indicates that the respective DistGrid dimension is *not* mapped against any Array dimension. What this means is that the Array will be replicated along this DistGrid dimension.

As a first example consider the case where a 1D Array

```
call ESMF_ArraySpecSet(arrayspec, typekind=ESMF_TYPEKIND_R8, rank=1, rc=rc)
```

is created on the 2D DistGrid used during the previous section.

```
array = ESMF_ArrayCreate(arrayspec=arrayspec, distgrid=distgrid, rc=rc)
```

Here the default DistGrid to Array dimension mapping is used which assigns the Array dimensions in sequence to the DistGrid dimensions starting with dimension "1". Extra DistGrid dimensions are considered replicator dimensions because the Array will be replicated along those dimensions. In the above example the 2nd DistGrid dimension will cause 1D Array pieces to be replicated along the DEs of the 2nd DistGrid dimension. Replication in the context of ESMF_ArrayCreate() does not mean that data values are communicated and replicated between different DEs, but it means that different DEs provide memory allocations for *identical* exclusive elements.

Access to the data storage of an Array that has been replicated along DistGrid dimensions is the same as for Arrays without replication.

```
call ESMF_ArrayGet(array, localDeCount=localDeCount, rc=rc)

allocate(larrayList(0:localDeCount-1))
allocate(localDeToDeMap(0:localDeCount-1))
call ESMF_ArrayGet(array, localarrayList=larrayList, &
  localDeToDeMap=localDeToDeMap, rc=rc)
```

The array object was created without additional padding which means that the bounds of the Fortran array pointer correspond to the bounds of the exclusive region. The following loop will cycle through all local DEs, print the DE number as well as the Fortran array pointer bounds. The bounds should be:

```
           lbound       ubound

 DE 0:       1            3         --+
 DE 2:       1            3         --|  1st replication set
 DE 4:       1            3         --+

 DE 1:       1            2         --+
 DE 3:       1            2         --|  2nd replication set
 DE 5:       1            2         --+
```

```
do localDe=0, localDeCount-1
  call ESMF_LocalArrayGet(larrayList(localDe), myFarray1D, &
    datacopyflag=ESMF_DATACOPY_REFERENCE, rc=rc)

  print *, "localPet: ", localPet, "DE ",localDeToDeMap(localDe)," [", &
    lbound(myFarray1D), ubound(myFarray1D),"]"
enddo
deallocate(larrayList)
deallocate(localDeToDeMap)
call ESMF_ArrayDestroy(array, rc=rc)
```

The Fortran array pointer in the above loop was of rank 1 because the Array object was of rank 1. However, the `distgrid` object associated with `array` is 2-dimensional! Consequently DistGrid based information queried from `array` will be 2D. The `distgridToArrayMap` and `arrayToDistGridMap` arrays provide the necessary mapping to correctly associate DistGrid based information with Array dimensions.

The next example creates a 2D Array

```
call ESMF_ArraySpecSet(arrayspec, typekind=ESMF_TYPEKIND_R8, rank=2, rc=rc)
```

on the previously used 2D DistGrid. By default, i.e. without the `distgridToArrayMap` argument, both DistGrid dimensions would be associated with the two Array dimensions. However, the `distgridToArrayMap` specified in the following call will only associate the second DistGrid dimension with the first Array dimension. This will render the first DistGrid dimension a replicator dimension and the second Array dimension a tensor dimension for which 1D `undistLBound` and `undistUBound` arguments must be supplied.

```
array = ESMF_ArrayCreate(arrayspec=arrayspec, distgrid=distgrid, &
  distgridToArrayMap=(/0,1/), undistLBound=(/11/), &
  undistUBound=(/14/), rc=rc)

call ESMF_ArrayDestroy(array, rc=rc)
```

Finally, the same `arrayspec` and `distgrid` arguments are used to create a 2D Array that is fully replicated in both dimensions of the DistGrid. Both Array dimensions are now tensor dimensions and both DistGrid dimensions are replicator dimensions.

```
array = ESMF_ArrayCreate(arrayspec=arrayspec, distgrid=distgrid, &
  distgridToArrayMap=(/0,0/), undistLBound=(/11,21/), &
  undistUBound=(/14,22/), rc=rc)
```

The result will be an Array with local lower bound (/11,21/) and upper bound (/14,22/) on all 6 DEs of the DistGrid.

```
call ESMF_ArrayDestroy(array, rc=rc)

call ESMF_DistGridDestroy(distgrid, rc=rc)
```

Replicated Arrays can also be created from existing local Fortran arrays. The following Fortran array allocation will provide a 3 x 10 array on each PET.

```
allocate(myFarray2D(3,10))
```

Assuming a petCount of 4 the following DistGrid defines a 2D index space that is distributed across the PETs along the first dimension.

```
distgrid = ESMF_DistGridCreate(minIndex=(/1,1/), maxIndex=(/40,10/), rc=rc)
```

The following call creates an Array object on the above distgrid using the locally existing `myFarray2D` Fortran arrays. The difference compared to the case with automatic memory allocation is that instead of `arrayspec` the Fortran array is provided as argument. Furthermore, the `undistLBound` and `undistUBound` arguments can be omitted, defaulting into Array tensor dimension lower bound of 1 and an upper bound equal to the size of the respective Fortran array dimension.

```
array = ESMF_ArrayCreate(farray=myFarray2D, distgrid=distgrid, &
  indexflag=ESMF_INDEX_DELOCAL, distgridToArrayMap=(/0,2/), rc=rc)
```

The `array` object associates the 2nd DistGrid dimension with the 2nd Array dimension. The first DistGrid dimension is not associated with any Array dimension and will lead to replication of the Array along the DEs of this direction.

```
call ESMF_ArrayDestroy(array, rc=rc)

call ESMF_DistGridDestroy(distgrid, rc=rc)
```

29.2.13 Shared memory features: DE pinning, sharing, and migration

Practically all modern computer systems today utilize multi-core processors, supporting the concurrent execution of multiple hardware threads. A number of these multi-core processors are commonly packaged into the same compute node, having access to the same physical memory. Under ESMF each hardware thread (or core) is identified as a unique Processing Element (PE). The collection of PEs that share the same physical memory (i.e. compute node) is referred to as a Single System Image (SSI). The ESMF Array class implements features that allow the user to leverage the shared memory within each SSI to efficiently exchange data without copies or explicit communication calls.

The software threads executing an ESMF application on the hardware, and that ESMF is aware of, are referred to as Persistent Execution Threads (PETs). In practice a PET can typically be thought of as an MPI rank, i.e. an OS process, defining its own private virtual address space (VAS). The ESMF Virtual Machine (VM) class keeps track of the mapping between PETs and PEs, and their location on the available SSIs.

When an ESMF Array object is created, the specified DistGrid indicates how many Decomposition Elements (DEs) are created. Each DE has its own memory allocation to hold user data. The DELayout, referenced by the DistGrid, determines which PET is considered the *owner* of each of the DEs. Queried for the local DEs, the Array object returns the list of DEs that are owned by the local PET making the query.

By default DEs are *pinned* to the PETs under which they were created. The memory allocation associated with a specific DE is only defined in the VAS of the PET to which the DE is pinned. As a consequence, only the PET owning a DE has access to its memory allocation.

On shared memory systems, however, ESMF allows DEs to be pinned to SSIs instead of PETs. In this case the PET under which a DE was created is still consider the owner, but now *all* PETs under the same SSI have access to the DE. For this the memory allocation associated with the DE is mapped into the VAS of all the PETs under the SSI.

To create an Array with each DE pinned to SSI instead of PET, first query the VM for the available level of support.

```
call ESMF_VMGet(vm, ssiSharedMemoryEnabledFlag=ssiSharedMemoryEnabled, rc=rc)

if (ssiSharedMemoryEnabled) then
```

Knowing that the SSI shared memory feature is available, it is now possible to create an Array object with DE to SSI pinning.

```
distgrid = ESMF_DistGridCreate(minIndex=(/1,1/), maxIndex=(/40,10/), rc=rc)

array = ESMF_ArrayCreate(typekind=ESMF_TYPEKIND_R8, distgrid=distgrid, &
  pinflag=ESMF_PIN_DE_TO_SSI, rc=rc)
```

Just as in the cases discussed before, where the same DistGrid was used, a default DELayout with as many DEs as PETs in the VM is constructed. Setting the `pinflag` to `ESMF_PIN_DE_TO_SSI` does not change the fact that each PET owns exactly one of the DEs. However, assuming that this code is run on a set of PETs that are all located under the same SSI, every PET now has *access* to all of the DEs. The situation can be observed by querying for both the `localDeCount`, and the `ssiLocalDeCount`.

```
call ESMF_ArrayGet(array, localDeCount=localDeCount, &
  ssiLocalDeCount=ssiLocalDeCount, rc=rc)
```

Assuming execution on 4 PETs, all located on the same SSI, the values of the returned variable are `localDeCount==1` and `ssiLocalDeCount==4` on all of the PETs. The mapping between each PET's local DE, and the global DE index is provided through the `localDeToDeMap` array argument. The amount of mapping information returned is dependent on how large `localDeToDeMap` has been sized by the user. For `size(localDeToDeMap)==localDeCount`, only mapping information for those DEs *owned* by the local PET is filled in. However for `size(localDeToDeMap)==ssiLocalDeCount`, mapping information for all locally *accessible* DEs is returned, including those owned by other PETs on the same SSI.

```
allocate(localDeToDeMap(0:ssiLocalDeCount-1))
call ESMF_ArrayGet(array, localDeToDeMap=localDeToDeMap, rc=rc)
```

The first `localDeCount` entries of `localDeToDeMap` are always the global DE indices of the DEs *owned* by the local PET. The remaining `ssiLocalDeCount-localDeCount` entries are the global DE indices of DEs *shared* by other PETs. The ordering of the shared DEs is from smallest to greatest, excluding the locally owned DEs, which were already listed at the beginning of `localDeToDeMap`. For the current case, again assuming execution on 4 PETs all located on the same SSI, we expect the following situation:

PET 0: `localDeToDeMap==(/0,1,2,3/)`
PET 1: `localDeToDeMap==(/1,0,2,3/)`
PET 2: `localDeToDeMap==(/2,0,1,3/)`
PET 3: `localDeToDeMap==(/3,0,1,2/)`

Each PET can access the memory allocations associated with *all* of the DEs listed in the `localDeToDeMap` returned by the Array object. Direct access to the Fortran array pointer of a specific memory allocation is available through `ESMF_ArrayGet()`. Here each PET queries for the `farrayPtr` of `localDe==2`, i.e. the 2nd shared DE.

```
call ESMF_ArrayGet(array, farrayPtr=myFarray, localDe=2, rc=rc)
```

Now variable `myFarray` on PETs 0 and 1 both point to the *same* memory allocation for global DE 2. Both PETs have access to the same piece of shared memory! The same is true for PETs 2 and 3, pointing to the shared memory allocation of global DE 1.

It is important to note that all of the typical considerations surrounding shared memory programming apply when accessing shared DEs! Proper synchronization between PETs accessing shared DEs is critical to avoid *race conditions*. Also performance issues like *false sharing* need to be considered for optimal use.

For a simple demonstration, PETs 0 and 2 fill the entire memory allocation of DE 2 and 1, respectively, to a unique value.

```
if (localPet==0) then
  myFarray = 12345.6789d0
else if (localPet==2) then
  myFarray = 6789.12345d0
endif
```

Here synchronization is needed before any PETs that share access to the same DEs can safely access the data without race condition. The Array class provides a simple synchronization method that can be used.

```
call ESMF_ArraySync(array, rc=rc) ! prevent race condition
```

Now it is safe for PETs 1 and 3 to access the shared DEs. We expect to find the data that was set above. For simplicity of the code only the first array element is inspected here.

```
if (localPet==1) then
  if (abs(myFarray(1,1)-12345.6789d0)>1.d10) print *, "bad data detected"
else if (localPet==3) then
  if (abs(myFarray(1,1)-6789.12345d0)>1.d10) print *, "bad data detected"
endif
```

Working with shared DEs requires additional bookkeeping on the user code level. In some situations, however, DE sharing is simply used as a mechanism to *move* DEs between PETs without requiring data copies. One practical application of this case is the transfer of an Array between two components, both of which use the same PEs, but run with different number of PETs. These would typically be sequential components that use OpenMP on the user level with varying threading levels.

DEs that are pinned to SSI can be moved or *migrated* to any PET within the SSI. This is accomplished by creating a new Array object from an existing Array that was created with `pinflag=ESMF_PIN_DE_TO_SSI`. The information of how the DEs are to migrate between the old and the new Array is provided through a DELayout object. This object must have the same number of DEs and describes how they map to the PETs on the current VM. If this is in the context of a different component, the number of PETs might differ from the original VM under which the existing Array was created. This situation is explicitly supported, still the number of DEs must match.

Here a simple DELayout is created on the same 4 PETs, but with rotated DE ownerships:

DE 0 -> PET 1 (old PET 0)
DE 1 -> PET 2 (old PET 1)
DE 2 -> PET 3 (old PET 2)
DE 3 -> PET 0 (old PET 3)

```
delayout = ESMF_DELayoutCreate(petMap=(/1,2,3,0/), rc=rc) ! DE->PET mapping
```

The creation of the new Array is done by reference, i.e. `datacopyflag=ESMF_DATACOPY_REFERENCE`, since the new Array does not create its own memory allocations. Instead the new Array references the shared memory resources held by the incoming Array object.

```
arrayMigrated = ESMF_ArrayCreate(array, delayout=delayout, &
  datacopyflag=ESMF_DATACOPY_REFERENCE, rc=rc)
```

Querying `arrayMigrated` for the number of local DEs will return 1 on each PET. Sizing the `localDeToDeMap` accordingly and querying for it.

```
    deallocate(localDeToDeMap) ! free previous allocation
    allocate(localDeToDeMap(0:1))
    call ESMF_ArrayGet(arrayMigrated, localDeToDeMap=localDeToDeMap, rc=rc)
```

This yields the following expected outcome:

PET 0: `localDeToDeMap==(/1/)`
PET 1: `localDeToDeMap==(/2/)`
PET 2: `localDeToDeMap==(/3/)`
PET 3: `localDeToDeMap==(/0/)`

On each PET the respective Fortran array pointer is returned by the Array.

```
    call ESMF_ArrayGet(arrayMigrated, farrayPtr=myFarray, rc=rc)
```

The same situation could have been achieved with the original `array`. However, it would have required first finding the correct local DE for the target global DE on each PET, and then querying `array` accordingly. If needed more repeatedly, this bookkeeping would need to be kept in a user code data structure. The DE migration feature on the other hand provides a formal way to create a standard ESMF Array object that can be used directly in any Array level method as usual, letting ESMF handle the extra bookkeeping needed.

Before destroying an Array whose DEs are shared between PETs, it is advisable to issue one more synchronization. This prevents cases where a PET still might be accessing a shared DE, while the owner PET is already destroying the Array, therefore deallocating the shared memory resource.

```
    call ESMF_ArraySync(array, rc=rc) ! prevent race condition

    call ESMF_ArrayDestroy(array, rc=rc)
```

Remember that `arrayMigrated` shares the same memory allocations that were held by `array`. Array `arrayMigrated` must therefore not be used beyond the life time of `array`. Best to destroy it now.

```
    call ESMF_ArrayDestroy(arrayMigrated, rc=rc)

  endif ! ending the ssiSharedMemoryEnabled conditional
```

29.2.14 Communication – Scatter and Gather

It is a common situation, particularly in legacy code, that an ESMF Array object must be filled with data originating from a large Fortran array stored on a single PET.

```
  if (localPet == 0) then
    allocate(farray(10,20,30))
    do k=1, 30
      do j=1, 20
        do i=1, 10
          farray(i, j, k) = k*1000 + j*100 +  i
        enddo
      enddo
    enddo
```

```
else
  allocate(farray(0,0,0))
endif

distgrid = ESMF_DistGridCreate(minIndex=(/1,1,1/), maxIndex=(/10,20,30/), &
  rc=rc)

call ESMF_ArraySpecSet(arrayspec, typekind=ESMF_TYPEKIND_I4, rank=3, rc=rc)

array = ESMF_ArrayCreate(arrayspec=arrayspec, distgrid=distgrid, rc=rc)
```

The `ESMF_ArrayScatter()` method provides a convenient way of scattering array data from a single root PET across the DEs of an ESMF Array object.

```
call ESMF_ArrayScatter(array, farray=farray, rootPet=0, rc=rc)

deallocate(farray)
```

The destination of the ArrayScatter() operation are all the DEs of a single tile. For multi-tile Arrays the destination tile can be specified. The shape of the scattered Fortran array must match the shape of the destination tile in the ESMF Array.

Gathering data decomposed and distributed across the DEs of an ESMF Array object into a single Fortran array on root PET is accomplished by calling `ESMF_ArrayGather()`.

```
if (localPet == 3) then
  allocate(farray(10,20,30))
else
  allocate(farray(0,0,0))
endif

call ESMF_ArrayGather(array, farray=farray, rootPet=3, rc=rc)

deallocate(farray)
```

The source of the ArrayGather() operation are all the DEs of a single tile. For multi-tile Arrays the source tile can be specified. The shape of the gathered Fortran array must match the shape of the source tile in the ESMF Array.

The `ESMF_ArrayScatter()` operation allows to fill entire replicated Array objects with data coming from a single root PET.

```
distgrid = ESMF_DistGridCreate(minIndex=(/1,1/), maxIndex=(/5,5/), &
  regDecomp=(/2,3/), rc=rc)

call ESMF_ArraySpecSet(arrayspec, typekind=ESMF_TYPEKIND_R8, rank=2, rc=rc)

array = ESMF_ArrayCreate(arrayspec=arrayspec, distgrid=distgrid, &
  distgridToArrayMap=(/0,0/), undistLBound=(/11,21/), &
  undistUBound=(/14,22/), rc=rc)
```

The shape of the Fortran source array used in the Scatter() call must be that of the contracted Array, i.e. contracted DistGrid dimensions do not count. For the `array` just created this means that the source array on `rootPet` must be of shape 4 x 2.

```
if (localPet == 0) then
  allocate(myFarray2D(4,2))
  do j=1,2
    do i=1,4
      myFarray2D(i,j) = i * 100.d0 + j * 1.2345d0 ! initialize
    enddo
  enddo
else
  allocate(myFarray2D(0,0))
endif

call ESMF_ArrayScatter(array, farray=myFarray2D, rootPet=0, rc=rc)


deallocate(myFarray2D)
```

This will have filled each local 4 x 2 Array piece with the replicated data of `myFarray2D`.

```
call ESMF_ArrayDestroy(array, rc=rc)


call ESMF_DistGridDestroy(distgrid, rc=rc)
```

As a second example for the use of Scatter() and Gather() consider the following replicated Array created from existing local Fortran arrays.

```
allocate(myFarray2D(3,10))
distgrid = ESMF_DistGridCreate(minIndex=(/1,1/), maxIndex=(/40,10/), rc=rc)


array = ESMF_ArrayCreate(farray=myFarray2D, distgrid=distgrid, &
  indexflag=ESMF_INDEX_DELOCAL, distgridToArrayMap=(/0,2/), rc=rc)
```

The `array` object associates the 2nd DistGrid dimension with the 2nd Array dimension. The first DistGrid dimension is not associated with any Array dimension and will lead to replication of the Array along the DEs of this direction. Still, the local arrays that comprise the `array` object refer to independent pieces of memory and can be initialized independently.

```
myFarray2D = localPet ! initialize
```

However, the notion of replication becomes visible when an array of shape 3 x 10 on root PET 0 is scattered across the Array object.

```
if (localPet == 0) then
  allocate(myFarray2D2(5:7,11:20))

  do j=11,20
    do i=5,7
      myFarray2D2(i,j) = i * 100.d0 + j * 1.2345d0 ! initialize
```

```
    enddo
  enddo
else
  allocate(myFarray2D2(0,0))
endif

call ESMF_ArrayScatter(array, farray=myFarray2D2, rootPet=0, rc=rc)


deallocate(myFarray2D2)
```

The Array pieces on every DE will receive the same source data, resulting in a replication of data along DistGrid dimension 1.

When the inverse operation, i.e. `ESMF_ArrayGather()`, is applied to a replicated Array an intrinsic ambiguity needs to be considered. ESMF defines the gathering of data of a replicated Array as the collection of data originating from the numerically higher DEs. This means that data in replicated elements associated with numerically lower DEs will be ignored during `ESMF_ArrayGather()`. For the current example this means that changing the Array contents on PET 1, which here corresponds to DE 1,

```
if (localPet == 1) then
  myFarray2D = real(1.2345, ESMF_KIND_R8)
endif
```

will *not* affect the result of

```
allocate(myFarray2D2(3,10))
myFarray2D2 = 0.d0    ! initialize to a known value
call ESMF_ArrayGather(array, farray=myFarray2D2, rootPet=0, rc=rc)
```

The result remains completely defined by the unmodified values of Array in DE 3, the numerically highest DE. However, overriding the DE-local Array piece on DE 3

```
if (localPet==3) then
  myFarray2D = real(5.4321, ESMF_KIND_R8)
endif
```

will change the outcome of

```
call ESMF_ArrayGather(array, farray=myFarray2D2, rootPet=0, rc=rc)
```

as expected.

```
deallocate(myFarray2D2)

call ESMF_ArrayDestroy(array, rc=rc)


call ESMF_DistGridDestroy(distgrid, rc=rc)
```

29.2.15 Communication – Halo

One of the most fundamental communication pattern in domain decomposition codes is the *halo* operation. The ESMF Array class supports halos by allowing memory for extra elements to be allocated on each DE. See sections 29.2.2 and 29.2.8 for examples and details on how to create an Array with extra DE-local elements.

Here we consider an Array object that is created on a DistGrid that defines a 10 x 20 index space, decomposed into 4 DEs using a regular 2 x 2 decomposition.

```
distgrid = ESMF_DistGridCreate(minIndex=(/1,1/), maxIndex=(/10,20/), &
  regDecomp=(/2,2/), rc=rc)
```

The Array holds 2D double precision float data.

```
call ESMF_ArraySpecSet(arrayspec, typekind=ESMF_TYPEKIND_R8, rank=2, rc=rc)
```

The `totalLWidth` and `totalUWidth` arguments are used during Array creation to allocate 2 extra elements along every direction outside the exclusive region defined by the DistGrid for every DE. (The `indexflag` set to `ESMF_INDEX_GLOBAL` in this example does not affect the halo behavior of Array. The setting is simply more convenient for the following code.)

```
array = ESMF_ArrayCreate(arrayspec=arrayspec, distgrid=distgrid, &
  totalLWidth=(/2,2/), totalUWidth=(/2,2/), indexflag=ESMF_INDEX_GLOBAL, &
  rc=rc)
```

Without the explicit definition of boundary conditions in the DistGrid the following inner connections are defined.

```
+-------------------+       +-------------------+
| \       2       / |       | \       2       / |
|  +-------------+  |       |  +-------------+  |
|  |     DE 0    |  |       |  |     DE 2    |  |
|  |             |  |       |  |             |  |
|2 |    5 x 10   | 2|  <->  |2 |    5 x 10   | 2|
|  |             |  |       |  |             |  |
|  |             |  |       |  |             |  |
|  +-------------+  |       |  +-------------+  |
| /       2       \ |       | /       2       \ |
+-------------------+       +-------------------+

          ^            \/             ^
          |            /\             |
          v                           v

+-------------------+       +-------------------+
| \       2       / |       | \       2       / |
|  +-------------+  |       |  +-------------+  |
|  |     DE 1    |  |       |  |     DE 3    |  |
|  |             |  |       |  |             |  |
|2 |    5 x 10   | 2|  <->  |2 |    5 x 10   | 2|
|  |             |  |       |  |             |  |
|  |             |  |       |  |             |  |
|  +-------------+  |       |  +-------------+  |
```

```
| /        2        \ |        | /        2        \ |
+--------------------+        +--------------------+
```

The exclusive region on each DE is of shape 5 x 10, while the total region on each DE is of shape (5+2+2) x (10+2+2) = 9 x 14. In a typical application the elements in the exclusive region are updated exclusively by the PET that owns the DE. In this example the exclusive elements on every DE are initialized to the value $f(i, j)$ of the geometric function

$$f(i, j) = \sin(\alpha i)\cos(\beta j), \tag{1}$$

where

$$\alpha = 2\pi/N_i, i = 1, ...N_i \tag{2}$$

and

$$\beta = 2\pi/N_j, j = 1, ...N_j, \tag{3}$$

with $N_i = 10$ and $N_j = 20$.

```
a = 2. * 3.14159 / 10.
b = 2. * 3.14159 / 20.

call ESMF_ArrayGet(array, farrayPtr=farrayPtr, rc=rc)


call ESMF_ArrayGet(array, exclusiveLBound=eLB, exclusiveUBound=eUB, rc=rc)


do j=eLB(2,1), eUB(2,1)
  do i=eLB(1,1), eUB(1,1)
    farrayPtr(i,j) = sin(a*i) * cos(b*j)  ! test function
  enddo
enddo
```

The above loop only initializes the exclusive elements on each DE. The extra elements, outside the exclusive region, are left untouched, holding undefined values. Elements outside the exclusive region that correspond to exclusive elements in neighboring DEs can be filled with the data values in those neighboring elements. This is the definition of the halo operation.

In ESMF the halo communication pattern is first precomputed and stored in a RouteHandle object. This RouteHandle can then be used repeatedly to perform the same halo operation in the most efficient way.

The default halo operation for an Array is precomputed by the following call.

```
call ESMF_ArrayHaloStore(array=array, routehandle=haloHandle, rc=rc)
```

The `haloHandle` now holds the default halo operation for `array`, which matches as many elements as possible outside the exclusive region to their corresponding halo source elements in neighboring DEs. Elements that could not be matched, e.g. at the edge of the global domain with open boundary conditions, will not be updated by the halo operation.

The `haloHandle` is applied through the `ESMF_ArrayHalo()` method.

```
call ESMF_ArrayHalo(array=array, routehandle=haloHandle, rc=rc)
```

Finally the resources held by `haloHandle` need to be released.

```
call ESMF_ArrayHaloRelease(routehandle=haloHandle, rc=rc)
```

The `array` object created above defines a 2 element wide rim around the exclusive region on each DE. Consequently the default halo operation used above will have resulted in updating both elements along the inside edges. For simple numerical kernels often a single halo element is sufficient. One way to achieve this would be to reduce the size of the rim surrounding the exclusive region to 1 element along each direction. However, if the same Array object is also used for higher order kernels during a different phase of the calculation, a larger element rim is required. For this case `ESMF_ArrayHaloStore()` offers two optional arguments `haloLDepth` and `haloUDepth`. Using these arguments a reduced halo depth can be specified.

```
call ESMF_ArrayHaloStore(array=array, routehandle=haloHandle, &
  haloLDepth=(/1,1/), haloUDepth=(/1,1/), rc=rc)
```

This halo operation with a depth of 1 is sufficient to support a simple quadratic differentiation kernel.

```
allocate(farrayTemp(eLB(1,1):eUB(1,1), eLB(2,1):eUB(2,1)))

do step=1, 4
  call ESMF_ArrayHalo(array=array, routehandle=haloHandle, rc=rc)

  do j=eLB(2,1), eUB(2,1)
    do i=eLB(1,1), eUB(1,1)
      if (i==1) then
        ! global edge
        farrayTemp(i,j) = 0.5 * (-farrayPtr(i+2,j) + 4.*farrayPtr(i+1,j) &
          - 3.*farrayPtr(i,j)) / a
      else if (i==10) then
        ! global edge
        farrayTemp(i,j) = 0.5 * (farrayPtr(i-2,j) - 4.*farrayPtr(i-1,j) &
          + 3.*farrayPtr(i,j)) / a
      else
        farrayTemp(i,j) = 0.5 * (farrayPtr(i+1,j) - farrayPtr(i-1,j)) / a
      endif
    enddo
  enddo
  farrayPtr(eLB(1,1):eUB(1,1), eLB(2,1):eUB(2,1)) = farrayTemp
enddo

deallocate(farrayTemp)

call ESMF_ArrayHaloRelease(routehandle=haloHandle, rc=rc)
```

The special treatment of the global edges in the above kernel is due to the fact that the underlying DistGrid object does not define any special boundary conditions. By default open global boundaries are assumed which means that the rim elements on the global edges are untouched during the halo operation, and cannot be used in the symmetric numerical derivative formula. The kernel can be simplified (and the calculation is more precise) with periodic boundary conditions along the first Array dimension.

First destroy the current Array and DistGrid objects.

```
call ESMF_ArrayDestroy(array, rc=rc)
```

```
call ESMF_DistGridDestroy(distgrid, rc=rc)
```

Create a DistGrid with periodic boundary condition along the first dimension.

```
allocate(connectionList(1))  ! one connection
call ESMF_DistGridConnectionSet(connection=connectionList(1), &
   tileIndexA=1, tileIndexB=1, positionVector=(/10, 0/), rc=rc)

distgrid = ESMF_DistGridCreate(minIndex=(/1,1/), maxIndex=(/10,20/), &
  regDecomp=(/2,2/), connectionList=connectionList, rc=rc)

deallocate(connectionList)
array = ESMF_ArrayCreate(arrayspec=arrayspec, distgrid=distgrid, &
  totalLWidth=(/2,2/), totalUWidth=(/2,2/), indexflag=ESMF_INDEX_GLOBAL, &
  rc=rc)
```

Initialize the exclusive elements to the same geometric function as before.

```
call ESMF_ArrayGet(array, farrayPtr=farrayPtr, rc=rc)


call ESMF_ArrayGet(array, exclusiveLBound=eLB, exclusiveUBound=eUB, rc=rc)


do j=eLB(2,1), eUB(2,1)
  do i=eLB(1,1), eUB(1,1)
    farrayPtr(i,j) = sin(a*i) * cos(b*j)  ! test function
  enddo
enddo
```

The numerical kernel only operates along the first dimension. An asymmetric halo depth can be used to take this fact into account.

```
call ESMF_ArrayHaloStore(array=array, routehandle=haloHandle, &
  haloLDepth=(/1,0/), haloUDepth=(/1,0/), rc=rc)
```

Now the same numerical kernel can be used without special treatment of global edge elements. The symmetric derivative formula can be used for all exclusive elements.

```
allocate(farrayTemp(eLB(1,1):eUB(1,1), eLB(2,1):eUB(2,1)))

do step=1, 4
  call ESMF_ArrayHalo(array=array, routehandle=haloHandle, rc=rc)

  do j=eLB(2,1), eUB(2,1)
    do i=eLB(1,1), eUB(1,1)
      farrayTemp(i,j) = 0.5 * (farrayPtr(i+1,j) - farrayPtr(i-1,j)) / a
    enddo
  enddo
  farrayPtr(eLB(1,1):eUB(1,1), eLB(2,1):eUB(2,1)) = farrayTemp
enddo
```

The precision of the above kernel can be improved by going to a higher order interpolation. Doing so requires that the halo depth must be increased. The following code resets the exclusive Array elements to the test function, precomputes a RouteHandle for a halo operation with depth 2 along the first dimension, and finally uses the deeper halo in the higher order kernel.

```
do j=eLB(2,1), eUB(2,1)
  do i=eLB(1,1), eUB(1,1)
    farrayPtr(i,j) = sin(a*i) * cos(b*j)  ! test function
  enddo
enddo

call ESMF_ArrayHaloStore(array=array, routehandle=haloHandle2, &
  haloLDepth=(/2,0/), haloUDepth=(/2,0/), rc=rc)


do step=1, 4
  call ESMF_ArrayHalo(array=array, routehandle=haloHandle2, rc=rc)

  do j=eLB(2,1), eUB(2,1)
    do i=eLB(1,1), eUB(1,1)
      farrayTemp(i,j) = (-farrayPtr(i+2,j) + 8.*farrayPtr(i+1,j) &
        - 8.*farrayPtr(i-1,j) + farrayPtr(i-2,j)) / (12.*a)
    enddo
  enddo
  farrayPtr(eLB(1,1):eUB(1,1), eLB(2,1):eUB(2,1)) = farrayTemp
enddo

deallocate(farrayTemp)
```

ESMF supports having multiple halo operations defined on the same Array object at the same time. Each operation can be accessed through its unique RouteHandle. The above kernel could have made `ESMF_ArrayHalo()` calls with a depth of 1 along the first dimension using the previously precomputed `haloHandle` if it needed to. Both RouteHandles need to release their resources when no longer used.

```
call ESMF_ArrayHaloRelease(routehandle=haloHandle, rc=rc)

call ESMF_ArrayHaloRelease(routehandle=haloHandle2, rc=rc)
```

Finally the Array and DistGrid objects can be destroyed.

```
call ESMF_ArrayDestroy(array, rc=rc)

call ESMF_DistGridDestroy(distgrid, rc=rc)
```

29.2.16 Communication – Halo for arbitrary distribution

In the previous section the Array *halo* operation was demonstrated for regularly decomposed ESMF Arrays. However, the ESMF halo operation is not restricted to regular decompositions. The same Array halo methods apply unchanged to Arrays that are created on arbitrarily distributed DistGrids. This includes the non-blocking features discussed in section 29.2.20.

All of the examples in this section are based on the same arbitrarily distributed DistGrid. Section 37.3.5 discusses DistGrids with user-supplied, arbitrary sequence indices in detail. Here a global index space range from 1 through 20 is decomposed across 4 DEs. There are 4 PETs in this example with 1 DE per PET. Each PET constructs its local `seqIndexList` variable.

```
  do i=1, 5
#ifdef TEST_I8RANGE_on
    seqIndexList(i) = localPet + (i - 1) * petCount + 1 + seqIndexOffset
#else
    seqIndexList(i) = localPet + (i - 1) * petCount + 1
#endif
  enddo
```

This results in the following cyclic distribution scheme:

```
   DE 0 on PET 0: seqIndexList = (/1, 5, 9, 13, 17/)
   DE 1 on PET 1: seqIndexList = (/2, 6, 10, 14, 18/)
   DE 2 on PET 2: seqIndexList = (/3, 7, 11, 15, 19/)
   DE 3 on PET 3: seqIndexList = (/4, 8, 12, 16, 20/)
```

The local `seqIndexList` variables are then used to create a DistGrid with the indicated arbitrary distribution pattern.

```
  distgrid = ESMF_DistGridCreate(arbSeqIndexList=seqIndexList, rc=rc)
```

The resulting DistGrid is one-dimensional, although the user code may interpret the sequence indices as a 1D map into a problem of higher dimensionality.

In this example the local DE on each PET is associated with a 5 element exclusive region. Providing `seqIndexList` of different size on the different PETs is supported and would result in different number of exclusive elements on each PET.

Halo for a 1D Array from existing memory allocation, created on the 1D arbitrary DistGrid.

Creating an ESMF Array on top of a DistGrid with arbitrary sequence indices is in principle no different from creating an Array on a regular DistGrid. However, while an Array that was created on a regular DistGrid automatically inherits the index space topology information that is contained within the DistGrid object, there is no such topology information available for DistGrid objects with arbitrary sequence indices. As a consequence of this, Arrays created on arbitrary DistGrids do not automatically have the information that is required to associated halo elements with the exclusive elements across DEs. Instead the user must supply this information explicitly during Array creation.

Multiple ArrayCreate() interfaces exist that allow the creation of an Array on a DistGrid with arbitrary sequence indices. The sequence indices for the halo region of the local DE are supplied through an additional argument with dummy name `haloSeqIndexList`. As in the regular case, the ArrayCreate() interfaces differ in the way that the memory allocations for the Array elements are passed into the call. The following code shows how an ESMF Array can be wrapped around existing PET-local memory allocations. The allocations are of different size on each PET as to accommodate the correct number of local Array elements (exclusive region + halo region).

```
  allocate(farrayPtr1d(5+localPet+1)) !use explicit Fortran allocate statement

  if (localPet==0) then
    allocate(haloList(1))
#ifdef TEST_I8RANGE_on
    haloList(:)=(/1099511627782_ESMF_KIND_I8/)
#else
    haloList(:)=(/6/)
#endif
    array = ESMF_ArrayCreate(distgrid, farrayPtr1d, &
      haloSeqIndexList=haloList, rc=rc)
    if (rc /= ESMF_SUCCESS) call ESMF_Finalize(endflag=ESMF_END_ABORT)
  endif
  if (localPet==1) then
    allocate(haloList(2))
#ifdef TEST_I8RANGE_on
    haloList(:)=(/1099511627777_ESMF_KIND_I8,&
                  1099511627795_ESMF_KIND_I8/)
#else
    haloList(:)=(/1,19/)
#endif
    array = ESMF_ArrayCreate(distgrid, farrayPtr1d, &
      haloSeqIndexList=haloList, rc=rc)
    if (rc /= ESMF_SUCCESS) call ESMF_Finalize(endflag=ESMF_END_ABORT)
  endif
  if (localPet==2) then
    allocate(haloList(3))
#ifdef TEST_I8RANGE_on
    haloList(:)=(/1099511627792_ESMF_KIND_I8,&
                  1099511627782_ESMF_KIND_I8,&
                  1099511627785_ESMF_KIND_I8/)
#else
    haloList(:)=(/16,6,9/)
#endif
    array = ESMF_ArrayCreate(distgrid, farrayPtr1d, &
      haloSeqIndexList=haloList, rc=rc)
    if (rc /= ESMF_SUCCESS) call ESMF_Finalize(endflag=ESMF_END_ABORT)
  endif
  if (localPet==3) then
    allocate(haloList(4))
#ifdef TEST_I8RANGE_on
    haloList(:)=(/1099511627777_ESMF_KIND_I8,&
                  1099511627779_ESMF_KIND_I8,&
                  1099511627777_ESMF_KIND_I8,&
                  1099511627780_ESMF_KIND_I8/)
#else
    haloList(:)=(/1,3,1,4/)
#endif
    array = ESMF_ArrayCreate(distgrid, farrayPtr1d, &
      haloSeqIndexList=haloList, rc=rc)
    if (rc /= ESMF_SUCCESS) call ESMF_Finalize(endflag=ESMF_END_ABORT)
  endif
```

The `haloSeqIndexList` arguments are 1D arrays of sequence indices. It is through this argument that the user associates the halo elements with exclusive Array elements covered by the DistGrid. In this example there are different

number of halo elements on each DE. They are associated with exclusive elements as follows:

```
halo on DE 0 on PET 0: <seqIndex=6>  2nd exclusive element on DE 1
halo on DE 1 on PET 1: <seqIndex=1>  1st exclusive element on DE 0
                       <seqIndex=19> 5th exclusive element on DE 2
halo on DE 2 on PET 2: <seqIndex=16> 4th exclusive element on DE 3
                       <seqIndex=6>  2nd exclusive element on DE 1
                       <seqIndex=9>  3rd exclusive element on DE 0
halo on DE 3 on PET 3: <seqIndex=1>  1st exclusive element on DE 0
                       <seqIndex=3>  1st exclusive element on DE 2
                       <seqIndex=1>  1st exclusive element on DE 0
                       <seqIndex=4>  1st exclusive element on DE 3
```

The above `haloSeqIndexList` arguments were constructed very artificially in order to show the following general features:

- There is no restriction on the order in which the indices in a `haloSeqIndexList` can appear.
- The same sequence index may appear in multiple `haloSeqIndexList` arguments.
- The same sequence index may appear multiple times in the same `haloSeqIndexList` argument.
- A local sequence index may appear in a `haloSeqIndexList` argument.

The ArrayCreate() call checks that the provided Fortran memory allocation is correctly sized to hold the exclusive elements, as indicated by the DistGrid object, plus the halo elements as indicated by the local `haloSeqIndexList` argument. The size of the Fortran allocation must match exactly or a runtime error will be returned.

Analogous to the case of Arrays on regular DistGrids, it is the exclusive region of the local DE that is typically modified by the code running on each PET. All of the ArrayCreate() calls that accept the `haloSeqIndexList` argument place the exclusive region at the beginning of the memory allocation on each DE and use the remaining space for the halo elements. The following loop demonstrates this by filling the exclusive elements on each DE with initial values. Remember that in this example each DE holds 5 exclusive elements associated with different arbitrary sequence indices.

```
farrayPtr1d = 0 ! initialize
do i=1, 5
  farrayPtr1d(i) = real(seqIndexList(i), ESMF_KIND_R8)
enddo
print *, "farrayPtr1d: ", farrayPtr1d
```

Now the exclusive elements of `array` are initialized on each DE, however, the halo elements remain unchanged. A RouteHandle can be set up that encodes the required communication pattern for a halo exchange. The halo exchange is precomputed according to the arbitrary sequence indices specified for the exclusive elements by the DistGrid and the sequence indices provided by the user for each halo element on the local DE in form of the `haloSeqIndexList` argument during ArrayCreate().

```
call ESMF_ArrayHaloStore(array, routehandle=haloHandle, rc=rc)
```

Executing this halo operation will update the local halo elements according to the associated sequence indices.

```
call ESMF_ArrayHalo(array, routehandle=haloHandle, rc=rc)
```

As always it is good practice to release the RouteHandle when done with it.

```
call ESMF_ArrayHaloRelease(haloHandle, rc=rc)
```

Also the Array object should be destroyed when no longer needed.

```
call ESMF_ArrayDestroy(array, rc=rc)
```

Further, since the memory allocation was done explicitly using the Fortran `allocate()` statement, it is necessary to explicitly deallocate in order to prevent memory leaks in the user application.

```
deallocate(farrayPtr1d)
```

Halo for a 1D Array with ESMF managed memory allocation, created on the 1D arbitrary DistGrid.

Alternatively the exact same Array can be created where ESMF does the memory allocation and deallocation. In this case the `typekind` of the Array must be specified explicitly.

```
if (localPet==0) then
  array = ESMF_ArrayCreate(distgrid=distgrid, typekind=ESMF_TYPEKIND_R8, &
    haloSeqIndexList=haloList, rc=rc)
  if (rc /= ESMF_SUCCESS) call ESMF_Finalize(endflag=ESMF_END_ABORT)
endif
if (localPet==1) then
  array = ESMF_ArrayCreate(distgrid=distgrid, typekind=ESMF_TYPEKIND_R8, &
    haloSeqIndexList=haloList, rc=rc)
  if (rc /= ESMF_SUCCESS) call ESMF_Finalize(endflag=ESMF_END_ABORT)
endif
if (localPet==2) then
  array = ESMF_ArrayCreate(distgrid=distgrid, typekind=ESMF_TYPEKIND_R8, &
    haloSeqIndexList=haloList, rc=rc)
  if (rc /= ESMF_SUCCESS) call ESMF_Finalize(endflag=ESMF_END_ABORT)
endif
if (localPet==3) then
  array = ESMF_ArrayCreate(distgrid=distgrid, typekind=ESMF_TYPEKIND_R8, &
    haloSeqIndexList=haloList, rc=rc)
  if (rc /= ESMF_SUCCESS) call ESMF_Finalize(endflag=ESMF_END_ABORT)
endif
```

Use `ESMF_ArrayGet()` to gain access to the local memory allocation.

```
call ESMF_ArrayGet(array, farrayPtr=farrayPtr1d, rc=rc)
```

The returned Fortran pointer can now be used to initialize the exclusive elements on each DE as in the previous case.

```
do i=1, 5
  farrayPtr1d(i) = real(seqIndexList(i),ESMF_KIND_R8) / 10.d0
enddo
```

Identical halo operations are constructed and used.

```
call ESMF_ArrayHaloStore(array, routehandle=haloHandle, rc=rc)

call ESMF_ArrayHalo(array, routehandle=haloHandle, rc=rc)

call ESMF_ArrayHaloRelease(haloHandle, rc=rc)

call ESMF_ArrayDestroy(array, rc=rc)
```

Halo for an Array with undistributed dimensions, created on the 1D arbitrary DistGrid, with default Array to DistGrid dimension mapping.

A current limitation of the Array implementation restricts DistGrids that contain user-specified, arbitrary sequence indices to be exactly 1D when used to create Arrays. See section 29.3 for a list of current implementation restrictions. However, an Array created on such a 1D arbitrary DistGrid is allowed to have undistributed dimensions. The following example creates an Array on the same arbitrary DistGrid, with the same arbitrary sequence indices for the halo elements as before, but with one undistributed dimension with a size of 3.

```
if (localPet==0) then
  array = ESMF_ArrayCreate(distgrid=distgrid, typekind=ESMF_TYPEKIND_R8, &
    haloSeqIndexList=haloList, undistLBound=(/1/), undistUBound=(/3/), rc=rc)
  if (rc /= ESMF_SUCCESS) call ESMF_Finalize(endflag=ESMF_END_ABORT)
endif
if (localPet==1) then
  array = ESMF_ArrayCreate(distgrid=distgrid, typekind=ESMF_TYPEKIND_R8, &
    haloSeqIndexList=haloList, undistLBound=(/1/), undistUBound=(/3/), rc=rc)
  if (rc /= ESMF_SUCCESS) call ESMF_Finalize(endflag=ESMF_END_ABORT)
endif
if (localPet==2) then
  array = ESMF_ArrayCreate(distgrid=distgrid, typekind=ESMF_TYPEKIND_R8, &
    haloSeqIndexList=haloList, undistLBound=(/1/), undistUBound=(/3/), rc=rc)
  if (rc /= ESMF_SUCCESS) call ESMF_Finalize(endflag=ESMF_END_ABORT)
endif
if (localPet==3) then
  array = ESMF_ArrayCreate(distgrid=distgrid, typekind=ESMF_TYPEKIND_R8, &
    haloSeqIndexList=haloList, undistLBound=(/1/), undistUBound=(/3/), rc=rc)
  if (rc /= ESMF_SUCCESS) call ESMF_Finalize(endflag=ESMF_END_ABORT)
endif
```

By default the DistGrid dimension is mapped to the first Array dimension, associating the remaining Array dimensions with the undistributed dimensions in sequence. The dimension order is important when accessing the individual Array elements. Here the same initialization as before is extended to cover the undistributed dimension.

```
call ESMF_ArrayGet(array, farrayPtr=farrayPtr2d, rc=rc)

do j=1, 3
  do i=1, 5
    farrayPtr2d(i,j) = real(seqIndexList(i),ESMF_KIND_R8) / 10.d0 + 100.d0*j
  enddo
enddo
```

In the context of the Array halo operation additional undistributed dimensions are treated in a simple factorized manner. The same halo association between elements that is encoded in the 1D arbitrary sequence index scheme is applied to each undistributed element separately. This is completely transparent on the user level and the same halo methods are used as before.

```
call ESMF_ArrayHaloStore(array, routehandle=haloHandle, rc=rc)

call ESMF_ArrayHalo(array, routehandle=haloHandle, rc=rc)

call ESMF_ArrayHaloRelease(haloHandle, rc=rc)

call ESMF_ArrayDestroy(array, rc=rc)
```

Halo for an Array with undistributed dimensions, created on the 1D arbitrary DistGrid, mapping the undistributed dimension first.

In some situations it is more convenient to associate some or all of the undistributed dimensions with the first Array dimensions. This can be done easily by explicitly mapping the DistGrid dimension to an Array dimension other than the first one. The `distgridToArrayMap` argument is used to provide this information. The following code creates essentially the same Array as before, but with swapped dimension order – now the first Array dimension is the undistributed one.

```
  if (localPet==0) then
    array = ESMF_ArrayCreate(distgrid=distgrid, typekind=ESMF_TYPEKIND_R8, &
      distgridToArrayMap=(/2/), haloSeqIndexList=haloList, &
      undistLBound=(/1/), undistUBound=(/3/), rc=rc)
    if (rc /= ESMF_SUCCESS) call ESMF_Finalize(endflag=ESMF_END_ABORT)
  endif
  if (localPet==1) then
    array = ESMF_ArrayCreate(distgrid=distgrid, typekind=ESMF_TYPEKIND_R8, &
      distgridToArrayMap=(/2/), haloSeqIndexList=haloList, &
      undistLBound=(/1/), undistUBound=(/3/), rc=rc)
    if (rc /= ESMF_SUCCESS) call ESMF_Finalize(endflag=ESMF_END_ABORT)
  endif
  if (localPet==2) then
    array = ESMF_ArrayCreate(distgrid=distgrid, typekind=ESMF_TYPEKIND_R8, &
      distgridToArrayMap=(/2/), haloSeqIndexList=haloList, &
      undistLBound=(/1/), undistUBound=(/3/), rc=rc)
    if (rc /= ESMF_SUCCESS) call ESMF_Finalize(endflag=ESMF_END_ABORT)
  endif
  if (localPet==3) then
#ifdef TEST_I8RANGE_on
    haloList(:)=(/1099511627777_ESMF_KIND_I8,&
                  1099511627780_ESMF_KIND_I8,&
                  1099511627779_ESMF_KIND_I8,&
                  1099511627778_ESMF_KIND_I8/)
#else
    haloList(:)=(/1,3,5,4/)
#endif
    array = ESMF_ArrayCreate(distgrid=distgrid, typekind=ESMF_TYPEKIND_R8, &
      distgridToArrayMap=(/2/), haloSeqIndexList=haloList, &
      undistLBound=(/1/), undistUBound=(/3/), rc=rc)
```

```
  if (rc /= ESMF_SUCCESS) call ESMF_Finalize(endflag=ESMF_END_ABORT)
endif
```

Notice that the `haloList` constructed on PET 3 is different from the previous examples. All other PETs reuse the same `haloList` as before. In the previous examples the list loaded into PET 3's `haloSeqIndexList` argument contained a duplicate sequence index. However, now that the undistributed dimension is placed first, the `ESMF_ArrayHaloStore()` call will try to optimize the data exchange by vectorizing it. Duplicate sequence indices are currently *not* supported during vectorization.

When accessing the Array elements, the swapped dimension order results in a swapping of `i` and `j`. This can be seen in the following initialization loop.

```
call ESMF_ArrayGet(array, farrayPtr=farrayPtr2d, rc=rc)

do j=1, 3
  do i=1, 5
    farrayPtr2d(j,i) = real(seqIndexList(i),ESMF_KIND_R8) / 10.d0 + 100.d0*j
  enddo
enddo
```

Once set up, there is no difference in how the the halo operations are applied.

```
call ESMF_ArrayHaloStore(array, routehandle=haloHandle, rc=rc)

call ESMF_ArrayHalo(array, routehandle=haloHandle, rc=rc)

call ESMF_ArrayDestroy(array, rc=rc)
```

Halo for an Array with undistributed dimensions, created on the 1D arbitrary DistGrid, re-using the RouteHandle.

Arrays can reuse the same RouteHandle, saving the overhead that is caused by the precompute step. In order to demonstrate this the RouteHandle of the previous halo call was not yet released and will be applied to a new Array.

The following code creates an Array that is compatible to the previous Array by using the same input information as before, only that the size of the undistributed dimension is now 6 instead of 3.

```
if (localPet==0) then
  array2 = ESMF_ArrayCreate(distgrid=distgrid, typekind=ESMF_TYPEKIND_R8, &
    distgridToArrayMap=(/2/), haloSeqIndexList=haloList, &
    undistLBound=(/1/), undistUBound=(/6/), rc=rc)
  if (rc /= ESMF_SUCCESS) call ESMF_Finalize(endflag=ESMF_END_ABORT)
endif
if (localPet==1) then
  array2 = ESMF_ArrayCreate(distgrid=distgrid, typekind=ESMF_TYPEKIND_R8, &
    distgridToArrayMap=(/2/), haloSeqIndexList=haloList, &
    undistLBound=(/1/), undistUBound=(/6/), rc=rc)
  if (rc /= ESMF_SUCCESS) call ESMF_Finalize(endflag=ESMF_END_ABORT)
endif
if (localPet==2) then
  array2 = ESMF_ArrayCreate(distgrid=distgrid, typekind=ESMF_TYPEKIND_R8, &
```

```
    distgridToArrayMap=(/2/), haloSeqIndexList=haloList, &
    undistLBound=(/1/), undistUBound=(/6/), rc=rc)
  if (rc /= ESMF_SUCCESS) call ESMF_Finalize(endflag=ESMF_END_ABORT)
endif
if (localPet==3) then
  array2 = ESMF_ArrayCreate(distgrid=distgrid, typekind=ESMF_TYPEKIND_R8, &
    distgridToArrayMap=(/2/), haloSeqIndexList=haloList, &
    undistLBound=(/1/), undistUBound=(/6/), rc=rc)
  if (rc /= ESMF_SUCCESS) call ESMF_Finalize(endflag=ESMF_END_ABORT)
endif
```

Again the exclusive Array elements must be initialized.

```
call ESMF_ArrayGet(array2, farrayPtr=farrayPtr2d, rc=rc)

do j=1, 6
  do i=1, 5
    farrayPtr2d(j,i) = real(seqIndexList(i),ESMF_KIND_R8) / 10.d0 + 100.d0*j
  enddo
enddo
```

Now the `haloHandle` that was previously pre-computed for `array` can be used directly for `array2`.

```
call ESMF_ArrayHalo(array2, routehandle=haloHandle, rc=rc)
```

Release the RouteHandle after its last use and clean up the remaining Array and DistGrid objects.

```
call ESMF_ArrayHaloRelease(haloHandle, rc=rc)

call ESMF_ArrayDestroy(array2, rc=rc)

call ESMF_DistGridDestroy(distgrid, rc=rc)
```

29.2.17 Communication – Redist

Arrays used in different models often cover the same index space region, however, the distribution of the Arrays may be different, e.g. the models run on exclusive sets of PETs. Even if the Arrays are defined on the same list of PETs the decomposition may be different.

```
srcDistgrid = ESMF_DistGridCreate(minIndex=(/1,1/), maxIndex=(/10,20/), &
  regDecomp=(/4,1/), rc=rc)

dstDistgrid = ESMF_DistGridCreate(minIndex=(/1,1/), maxIndex=(/10,20/), &
  regDecomp=(/1,4/), rc=rc)
```

The number of elements covered by `srcDistgrid` is identical to the number of elements covered by `dstDistgrid` – in fact the index space regions covered by both DistGrid objects are congruent. However, the decomposition defined by `regDecomp`, and consequently the distribution of source and destination, are different.

```
call ESMF_ArraySpecSet(arrayspec, typekind=ESMF_TYPEKIND_R8, rank=2, rc=rc)

srcArray = ESMF_ArrayCreate(arrayspec=arrayspec, distgrid=srcDistgrid, rc=rc)

dstArray = ESMF_ArrayCreate(arrayspec=arrayspec, distgrid=dstDistgrid, rc=rc)
```

Default Mode By construction `srcArray` and `dstArray` are of identical type and kind. Further the number of exclusive elements matches between both Arrays. These are the prerequisites for the application of an Array redistribution in *default* mode. In order to increase performance of the actual redistribution the communication pattern is precomputed once, and stored in an `ESMF_RouteHandle` object.

```
call ESMF_ArrayRedistStore(srcArray=srcArray, dstArray=dstArray, &
  routehandle=redistHandle, rc=rc)
```

The `redistHandle` can now be used repeatedly to transfer data from `srcArray` to `dstArray`.

```
call ESMF_ArrayRedist(srcArray=srcArray, dstArray=dstArray, &
  routehandle=redistHandle, rc=rc)
```

The use of the precomputed `redistHandle` is *not* restricted to the (`srcArray`, `dstArray`) pair. Instead the `redistHandle` can be used to redistribute data between any two Arrays that are compatible with the Array pair used during precomputation. I.e. any pair of Arrays that matches `srcArray` and `dstArray` in *type*, *kind*, and memory layout of the *distributed* dimensions. However, the size, number, and index order of *undistributed* dimensions may be different. See section 38.2.5 for a more detailed discussion of RouteHandle reusability.

The transferability of RouteHandles between Array pairs can greatly reduce the number of communication store calls needed. In a typical application Arrays are often defined on the same decomposition, typically leading to congruent distributed dimensions. For these Arrays, while they may not have the same shape or size in the undistributed dimensions, RouteHandles are reusable.

For the current case, the `redistHandle` was precomputed for simple 2D Arrays without undistributed dimensions. The RouteHandle transferability rule allows us to use this same RouteHandle to redistribute between two 3D Array that are built on the same 2D DistGrid, but have an undistributed dimension. Note that the undistributed dimension does not have to be in the same position on source and destination. Here the undistributed dimension is in position 2 for `srcArray1`, and in position 1 for `dstArray1`.

```
call ESMF_ArraySpecSet(arrayspec3d, typekind=ESMF_TYPEKIND_R8, rank=3, rc=rc)

srcArray1 = ESMF_ArrayCreate(arrayspec=arrayspec3d, distgrid=srcDistgrid, &
  distgridToArrayMap=(/1,3/), undistLBound=(/1/), undistUBound=(/10/), rc=rc)

dstArray1 = ESMF_ArrayCreate(arrayspec=arrayspec3d, distgrid=dstDistgrid, &
  distgridToArrayMap=(/2,3/), undistLBound=(/1/), undistUBound=(/10/), rc=rc)

call ESMF_ArrayRedist(srcArray=srcArray1, dstArray=dstArray1, &
  routehandle=redistHandle, rc=rc)
```

The following variation of the code shows that the same RouteHandle can be applied to an Array pair even when the number of undistributed dimensions does not match between source and destination Array, as long as to the total *number* of undistributed *elements* matches.

We prepare a source Array with *two* undistributed dimensions, in position 1 and 3, of size 2 and 5, respectively. Thus there are $2 \times 5 = 10$ undistributed source elements. The destination array is the same as before with only a *single* undistributed dimension in position 1 of size 10.

```
call ESMF_ArraySpecSet(arrayspec4d, typekind=ESMF_TYPEKIND_R8, rank=4, rc=rc)

srcArray2 = ESMF_ArrayCreate(arrayspec=arrayspec4d, distgrid=srcDistgrid, &
  distgridToArrayMap=(/2,4/), undistLBound=(/1,1/), undistUBound=(/2,5/), &
  rc=rc)

call ESMF_ArrayRedist(srcArray=srcArray2, dstArray=dstArray1, &
  routehandle=redistHandle, rc=rc)
```

When done, the resources held by `redistHandle` need to be deallocated by the user code before the RouteHandle becomes inaccessible.

```
call ESMF_ArrayRedistRelease(routehandle=redistHandle, rc=rc)
```

Transpose Mode In default mode, i.e. without providing the optional `srcToDstTransposeMap` argument, `ESMF_ArrayRedistStore()` does not require equal number of dimensions in source and destination Array. Only the total number of elements must match. Specifying `srcToDstTransposeMap` switches `ESMF_ArrayRedistStore()` into *transpose* mode. In this mode each dimension of `srcArray` is uniquely associated with a dimension in `dstArray`, and the sizes of associated dimensions must match for each pair.

```
dstDistgrid = ESMF_DistGridCreate(minIndex=(/1,1/), maxIndex=(/20,10/), &
    rc=rc)

dstArray = ESMF_ArrayCreate(arrayspec=arrayspec, distgrid=dstDistgrid, rc=rc)
```

This `dstArray` object covers a 20 x 10 index space while the `srcArray`, defined further up, covers a 10 x 20 index space. Setting `srcToDstTransposeMap = (/2,1/)` will associate the first and second dimension of `srcArray` with the second and first dimension of `dstArray`, respectively. This corresponds to a transpose of dimensions. Since the decomposition and distribution of dimensions may be different for source and destination redistribution may occur at the same time.

```
call ESMF_ArrayRedistStore(srcArray=srcArray, dstArray=dstArray, &
  routehandle=redistHandle, srcToDstTransposeMap=(/2,1/), rc=rc)

call ESMF_ArrayRedist(srcArray=srcArray, dstArray=dstArray, &
  routehandle=redistHandle, rc=rc)
```

The transpose mode of `ESMF_ArrayRedist()` is not limited to distributed dimensions of Arrays. The `srcToDstTransposeMap` argument can be used to transpose undistributed dimensions in the same manner. Furthermore transposing distributed and undistributed dimensions between Arrays is also supported.

The `srcArray` used in the following examples is of rank 4 with 2 distributed and 2 undistributed dimensions. The distributed dimensions are the two first dimensions of the Array and are distributed according to the `srcDistgrid` which describes a total index space region of 100 x 200 elements. The last two Array dimensions are undistributed dimensions of size 2 and 3, respectively.

```
call ESMF_ArraySpecSet(arrayspec, typekind=ESMF_TYPEKIND_R8, rank=4, rc=rc)

srcDistgrid = ESMF_DistGridCreate(minIndex=(/1,1/), maxIndex=(/100,200/), &
  rc=rc)
```

```
srcArray = ESMF_ArrayCreate(arrayspec=arrayspec, distgrid=srcDistgrid, &
  undistLBound=(/1,1/), undistUBound=(/2,3/), rc=rc)
```

The first `dstArray` to consider is defined on a DistGrid that also describes a 100 x 200 index space region. The distribution indicated by `dstDistgrid` may be different from the source distribution. Again the first two Array dimensions are associated with the DistGrid dimensions in sequence. Furthermore, the last two Array dimensions are undistributed dimensions, however, the sizes are 3 and 2, respectively.

```
dstDistgrid = ESMF_DistGridCreate(minIndex=(/1,1/), maxIndex=(/100,200/), &
  rc=rc)

dstArray = ESMF_ArrayCreate(arrayspec=arrayspec, distgrid=dstDistgrid, &
  undistLBound=(/1,1/), undistUBound=(/3,2/), rc=rc)
```

The desired mapping between `srcArray` and `dstArray` dimensions is expressed by `srcToDstTransposeMap = (/1,2,4,3/)`, transposing only the two undistributed dimensions.

```
call ESMF_ArrayRedistStore(srcArray=srcArray, dstArray=dstArray, &
  routehandle=redistHandle, srcToDstTransposeMap=(/1,2,4,3/), rc=rc)

call ESMF_ArrayRedist(srcArray=srcArray, dstArray=dstArray, &
  routehandle=redistHandle, rc=rc)
```

Next consider a `dstArray` that is defined on the same `dstDistgrid`, but with a different order of Array dimensions. The desired order is specified during Array creation using the argument `distgridToArrayMap = (/2,3/)`. This map associates the first and second DistGrid dimensions with the second and third Array dimensions, respectively, leaving Array dimensions one and four undistributed.

```
dstArray = ESMF_ArrayCreate(arrayspec=arrayspec, distgrid=dstDistgrid, &
  distgridToArrayMap=(/2,3/), undistLBound=(/1,1/), undistUBound=(/3,2/), &
  rc=rc)
```

Again the sizes of the undistributed dimensions are chosen in reverse order compared to `srcArray`. The desired transpose mapping in this case will be `srcToDstTransposeMap = (/2,3,4,1/)`.

```
call ESMF_ArrayRedistStore(srcArray=srcArray, dstArray=dstArray, &
  routehandle=redistHandle, srcToDstTransposeMap=(/2,3,4,1/), rc=rc)

call ESMF_ArrayRedist(srcArray=srcArray, dstArray=dstArray, &
  routehandle=redistHandle, rc=rc)
```

Finally consider the case where `dstArray` is constructed on a 200 x 3 index space and where the undistributed dimensions are of size 100 and 2.

```
dstDistgrid = ESMF_DistGridCreate(minIndex=(/1,1/), maxIndex=(/200,3/), &
  rc=rc)

dstArray = ESMF_ArrayCreate(arrayspec=arrayspec, distgrid=dstDistgrid, &
  undistLBound=(/1,1/), undistUBound=(/100,2/), rc=rc)
```

By construction srcArray and dstArray hold the same number of elements, albeit in a very different layout. Nevertheless, with a srcToDstTransposeMap that maps matching dimensions from source to destination, the following Array redistribution becomes a well defined operation between srcArray and dstArray.

```
call ESMF_ArrayRedistStore(srcArray=srcArray, dstArray=dstArray, &
  routehandle=redistHandle, srcToDstTransposeMap=(/3,1,4,2/), rc=rc)

call ESMF_ArrayRedist(srcArray=srcArray, dstArray=dstArray, &
  routehandle=redistHandle, rc=rc)
```

The srcToDstTransposeMap mechanism supports negative map entries. Negative entries indicate that the order of elements is to be reversed when going from source to destination. Using the same srcArray and dstArray objects as in the previous example, the following code maps the first srcArray dimension to the third dstArray dimension, as before. However, the ordering of the elements along this dimension is reversed between source and destination.

```
call ESMF_ArrayRedistStore(srcArray=srcArray, dstArray=dstArray, &
  routehandle=redistHandle, srcToDstTransposeMap=(/-3,1,4,2/), rc=rc)

call ESMF_ArrayRedist(srcArray=srcArray, dstArray=dstArray, &
  routehandle=redistHandle, rc=rc)
```

Redistribution of multi-tile Arrays is supported, although not shown as an example here. In *default* mode, the index space defined by both source and destination Arrays must match, regardless of how it is comprised by tiles. In particular, there is no restriction on the number of source and desination tiles, as long as both sides define the same global index space.

The situation is different in *transpose* mode. Here the number of source and destination tiles must match. In this case, the redistribution is defined tile-by-tile in order. If the provided srcToDstTransposeMap is of size rank, it is used for all of the tiles. The other supported option is where srcToDstTransposeMap is of size $rank \times tileCount$. In that case each source-destination tile-pair has its own transpose map.

29.2.18 Communication – SparseMatMul

Sparse matrix multiplication is a fundamental Array communication method. One frequently used application of this method is the interpolation between pairs of Arrays. The principle is this: the value of each element in the exclusive region of the destination Array is expressed as a linear combination of *potentially all* the exclusive elements of the source Array. Naturally most of the coefficients of these linear combinations will be zero and it is more efficient to store explicit information about the non-zero elements than to keep track of all the coefficients.

There is a choice to be made with respect to the format in which to store the information about the non-zero elements. One option is to store the value of each coefficient together with the corresponding destination element index and source element index. Destination and source indices could be expressed in terms of the corresponding DistGrid tile index together with the coordinate tuple within the tile. While this format may be the most natural way to express elements in the source and destination Array, it has two major drawbacks. First the coordinate tuple is dimCount specific and second the format is extremely bulky. For 2D source and destination Arrays it would require 6 integers to store the source and destination element information for each non-zero coefficient and matters get worse for higher dimensions.

Both problems can be circumvented by *interpreting* source and destination Arrays as sequentialized strings or *vectors* of elements. This is done by assigning a unique *sequence index* to each exclusive element in both Arrays. With that the operation of updating the elements in the destination Array as linear combinations of source Array elements takes the form of a *sparse matrix multiplication*.

The default sequence index rule assigns index 1 to the `minIndex` corner element of the first tile of the DistGrid on which the Array is defined. It then increments the sequence index by 1 for each element running through the DistGrid dimensions by order. The index space position of the DistGrid tiles does not affect the sequence labeling of elements. The default sequence indices for

```
srcDistgrid = ESMF_DistGridCreate(minIndex=(/-1,0/), maxIndex=(/1,3/), rc=rc)
```

for each element are:

```
 ------------------------------------> 2nd dim
 |
 |   +------+------+------+------+
 |   |(-1,0)|      |      |(-1,3)|
 |   |      |      |      |      |
 |   |   1  |   4  |   7  |  10  |
 |   +------+------+------+------+
 |   |      |      |      |      |
 |   |      |      |      |      |
 |   |   2  |   5  |   8  |  11  |
 |   +------+------+------+------+
 |   | (1,0)|      |      | (1,3)|
 |   |      |      |      |      |
 |   |   3  |   6  |   9  |  12  |
 |   +------+------+------+------+
 |
 v
1st dim
```

The assigned sequence indices are decomposition and distribution invariant by construction. Furthermore, when an Array is created with extra elements per DE on a DistGrid the sequence indices (which only cover the exclusive elements) remain unchanged.

```
call ESMF_ArraySpecSet(arrayspec, typekind=ESMF_TYPEKIND_R8, rank=2, rc=rc)

srcArray = ESMF_ArrayCreate(arrayspec=arrayspec, distgrid=srcDistgrid, &
  totalLWidth=(/1,1/), totalUWidth=(/1,1/), indexflag=ESMF_INDEX_GLOBAL, &
  rc=rc)
```

The extra padding of 1 element in each direction around the exclusive elements on each DE are "invisible" to the Array sparse matrix multiplication method. These extra elements are either updated by the computational kernel or by Array halo operations.

An alternative way to assign sequence indices to all the elements in the tiles covered by a DistGrid object is to use a special `ESMF_DistGridCreate()` call. This call has been specifically designed for 1D cases with arbitrary, user-supplied sequence indices.

```
seqIndexList(1) = localPet*10
seqIndexList(2) = localPet*10 + 1
dstDistgrid = ESMF_DistGridCreate(arbSeqIndexList=seqIndexList, rc=rc)
```

This call to `ESMF_DistGridCreate()` is collective across the current VM. The `arbSeqIndexList` argument specifies the PET-local arbitrary sequence indices that need to be covered by the local DE. The resulting DistGrid has

one local DE per PET which covers the entire PET-local index range. The user supplied sequence indices must be unique, but the sequence may be interrupted. The four DEs of `dstDistgrid` have the following local 1D index space coordinates (given between "()") and sequence indices:

```
covered by DE 0    covered by DE 1   covered by DE 2   covered by DE 3
on PET 0           on PET 1          on PET 2          on PET 3
-------------------------------------------------------------------
(1) : 0            (1) : 10          (1) : 20          (1) : 30
(2) : 1            (2) : 11          (2) : 21          (2) : 31
```

Again the DistGrid object provides the sequence index labeling for the exclusive elements of an Array created on the DistGrid regardless of extra, non-exclusive elements.

```
dstArray = ESMF_ArrayCreate(arrayspec=arrayspec, distgrid=dstDistgrid, rc=rc)
```

With the definition of sequence indices, either by the default rule or as user provided arbitrary sequence indices, it is now possible to uniquely identify each exclusive element in the source and destination Array by a single integer number. Specifying a pair of source and destination elements takes two integer number regardless of the number of dimensions.

The information required to carry out a sparse matrix multiplication are the pair of source and destination sequence indices and the associated multiplication factor for each pair. ESMF requires this information in form of two Fortran arrays. The factors are stored in a 1D array of the appropriate type and kind, e.g. `real(ESMF_KIND_R8)::factorList(:)`. Array sparse matrix multiplications are supported between Arrays of different type and kind. The type and kind of the factors can also be chosen freely. The sequence index pairs associated with the factors provided by `factorList` are stored in a 2D Fortran array of default integer kind of the shape `integer::factorIndexList(2,:)`. The sequence indices of the source Array elements are stored in the first row of `factorIndexList` while the sequence indices of the destination Array elements are stored in the second row.

Each PET in the current VM must call into `ESMF_ArraySMMStore()` to precompute and store the communication pattern for the sparse matrix multiplication. The multiplication factors may be provided in parallel, i.e. multiple PETs may specify `factorList` and `factorIndexList` arguments when calling into `ESMF_ArraySMMStore()`. PETs that do not provide factors either call with `factorList` and `factorIndexList` arguments containing zero elements or issue the call omitting both arguments.

```
if (localPet == 0) then
  allocate(factorList(1))                ! PET 0 specifies 1 factor
  allocate(factorIndexList(2,1))
  factorList = (/0.2/)                   ! factors
  factorIndexList(1,:) = (/5/)           ! seq indices into srcArray
  factorIndexList(2,:) = (/30/)          ! seq indices into dstArray

  call ESMF_ArraySMMStore(srcArray=srcArray, dstArray=dstArray, &
    routehandle=sparseMatMulHandle, factorList=factorList, &
    factorIndexList=factorIndexList, rc=rc)



  deallocate(factorList)
  deallocate(factorIndexList)
else if (localPet == 1) then
  allocate(factorList(3))                ! PET 1 specifies 3 factor
  allocate(factorIndexList(2,3))
```

```
    factorList = (/0.5, 0.5, 0.8/)        ! factors
    factorIndexList(1,:) = (/8, 2, 12/)   ! seq indices into srcArray
    factorIndexList(2,:) = (/11, 11, 30/) ! seq indices into dstArray

    call ESMF_ArraySMMStore(srcArray=srcArray, dstArray=dstArray, &
      routehandle=sparseMatMulHandle, factorList=factorList, &
      factorIndexList=factorIndexList, rc=rc)


    deallocate(factorList)
    deallocate(factorIndexList)
  else
    ! PETs 2 and 3 do not provide factors

    call ESMF_ArraySMMStore(srcArray=srcArray, dstArray=dstArray, &
      routehandle=sparseMatMulHandle, rc=rc)


  endif
```

The RouteHandle object `sparseMatMulHandle` produced by `ESMF_ArraySMMStore()` can now be used to call `ESMF_ArraySMM()` collectively across all PETs of the current VM to perform

```
     dstArray = 0.0
     do n=1, size(combinedFactorList)
         dstArray(combinedFactorIndexList(2, n)) +=
           combinedFactorList(n) * srcArray(combinedFactorIndexList(1, n))
     enddo
```

in parallel. Here `combinedFactorList` and `combinedFactorIndexList` are the combined lists defined by the respective local lists provided by PETs 0 and 1 in parallel. For this example

```
  call ESMF_ArraySMM(srcArray=srcArray, dstArray=dstArray, &
    routehandle=sparseMatMulHandle, rc=rc)
```

will initialize the entire `dstArray` to 0.0 and then update two elements:

```
   on DE 1:
   dstArray(2) = 0.5 * srcArray(0,0)  +  0.5 * srcArray(0,2)
```

and

```
   on DE 3:
   dstArray(1) = 0.2 * srcArray(0,1)  +  0.8 * srcArray(1,3).
```

The call to `ESMF_ArraySMM()` does provide the option to turn the default `dstArray` initialization off. If argument `zeroregion` is set to `ESMF_REGION_EMPTY`

```
call ESMF_ArraySMM(srcArray=srcArray, dstArray=dstArray, &
  routehandle=sparseMatMulHandle, zeroregion=ESMF_REGION_EMPTY, rc=rc)
```

skips the initialization and elements in `dstArray` are updated according to:

```
do n=1, size(combinedFactorList)
    dstArray(combinedFactorIndexList(2, n)) +=
      combinedFactorList(n) * srcArray(combinedFactorIndexList(1, n)).
enddo
```

The `ESMF_RouteHandle` object returned by `ESMF_ArraySMMStore()` can be applied to any src/dst Array pairs that is compatible with the Array pair used during precomputation, i.e. any pair of Arrays that matches `srcArray` and `dstArray` in *type*, *kind*, and memory layout of the *distributed* dimensions. However, the size, number, and index order of *undistributed* dimensions may be different. See section 38.2.5 for a more detailed discussion of RouteHandle reusability.

The resources held by `sparseMatMulHandle` need to be deallocated by the user code before the handle becomes inaccessible.

```
call ESMF_ArraySMMRelease(routehandle=sparseMatMulHandle, rc=rc)
```

The Array sparse matrix multiplication also applies to Arrays with undistributed dimensions. The undistributed dimensions are interpreted in a sequentialized manner, much like the distributed dimensions, introducing a second sequence index for source and destination elements. Sequence index 1 is assigned to the first element in the first (i.e. fastest varying in memory) undistributed dimension. The following undistributed elements are labeled in consecutive order as they are stored in memory.

In the simplest case the Array sparse matrix multiplication will apply an identity matrix to the vector of sequentialized undistributed Array elements for every non-zero element in the sparse matrix. The requirement in this case is that the total undistributed element count, i.e. the product of the sizes of all undistributed dimensions, be the same for source and destination Array.

```
call ESMF_ArraySpecSet(arrayspec, typekind=ESMF_TYPEKIND_R8, rank=3, rc=rc)
srcArray = ESMF_ArrayCreate(arrayspec=arrayspec, distgrid=srcDistgrid, &
  totalLWidth=(/1,1/), totalUWidth=(/1,1/), indexflag=ESMF_INDEX_GLOBAL, &
  distgridToArrayMap=(/1,2/), undistLBound=(/1/), undistUBound=(/2/), rc=rc)

call ESMF_ArraySpecSet(arrayspec, typekind=ESMF_TYPEKIND_R8, rank=2, rc=rc)
dstArray = ESMF_ArrayCreate(arrayspec=arrayspec, distgrid=dstDistgrid, &
  distgridToArrayMap=(/2/), undistLBound=(/1/), undistUBound=(/2/), rc=rc)
```

Setting up `factorList` and `factorIndexList` is identical to the case for Arrays without undistributed dimensions. Also the call to `ESMF_ArraySMMStore()` remains unchanged. Internally, however, the source and destination Arrays are checked to make sure the total undistributed element count matches.

```
if (localPet == 0) then
  allocate(factorList(1))                ! PET 0 specifies 1 factor
  allocate(factorIndexList(2,1))
  factorList = (/0.2/)                   ! factors
  factorIndexList(1,:) = (/5/)           ! seq indices into srcArray
  factorIndexList(2,:) = (/30/)          ! seq indices into dstArray
```

```
    call ESMF_ArraySMMStore(srcArray=srcArray, dstArray=dstArray, &
      routehandle=sparseMatMulHandle, factorList=factorList, &
      factorIndexList=factorIndexList, rc=rc)



    deallocate(factorList)
    deallocate(factorIndexList)
  else if (localPet == 1) then
    allocate(factorList(3))               ! PET 1 specifies 3 factor
    allocate(factorIndexList(2,3))
    factorList = (/0.5, 0.5, 0.8/)        ! factors
    factorIndexList(1,:) = (/8, 2, 12/)   ! seq indices into srcArray
    factorIndexList(2,:) = (/11, 11, 30/) ! seq indices into dstArray

    call ESMF_ArraySMMStore(srcArray=srcArray, dstArray=dstArray, &
      routehandle=sparseMatMulHandle, factorList=factorList, &
      factorIndexList=factorIndexList, rc=rc)



    deallocate(factorList)
    deallocate(factorIndexList)
  else
    ! PETs 2 and 3 do not provide factors

    call ESMF_ArraySMMStore(srcArray=srcArray, dstArray=dstArray, &
      routehandle=sparseMatMulHandle, rc=rc)


  endif
```

The call into the `ESMF_ArraySMM()` operation is completely transparent with respect to whether source and/or destination Arrays contain undistributed dimensions.

```
  call ESMF_ArraySMM(srcArray=srcArray, dstArray=dstArray, &
    routehandle=sparseMatMulHandle, rc=rc)
```

This operation will initialize the entire `dstArray` to 0.0 and then update four elements:

```
   on DE 1:
   dstArray[1](2) = 0.5 * srcArray(0,0)[1]  +  0.5 * srcArray(0,2)[1],
   dstArray[2](2) = 0.5 * srcArray(0,0)[2]  +  0.5 * srcArray(0,2)[2]
```

and

```
   on DE 3:
   dstArray[1](1) = 0.2 * srcArray(0,1)[1]  +  0.8 * srcArray(1,3)[1],
   dstArray[2](1) = 0.2 * srcArray(0,1)[2]  +  0.8 * srcArray(1,3)[2].
```

Here indices between "()" refer to distributed dimensions while indices between "[]" correspond to undistributed dimensions.

In a more general version of the Array sparse matrix multiplication the total undistributed element count, i.e. the product of the sizes of all undistributed dimensions, need not be the same for source and destination Array. In this formulation each non-zero element of the sparse matrix is identified with a unique element in the source and destination Array. This requires a generalization of the `factorIndexList` argument which now must contain four integer numbers for each element. These numbers in sequence are the sequence index of the distributed dimensions and the sequence index of the undistributed dimensions of the element in the source Array, followed by the sequence index of the distributed dimensions and the sequence index of the undistributed dimensions of the element in the destination Array.

```
call ESMF_ArraySpecSet(arrayspec, typekind=ESMF_TYPEKIND_R8, rank=3, rc=rc)
srcArray = ESMF_ArrayCreate(arrayspec=arrayspec, distgrid=srcDistgrid, &
  totalLWidth=(/1,1/), totalUWidth=(/1,1/), indexflag=ESMF_INDEX_GLOBAL, &
  distgridToArrayMap=(/1,2/), undistLBound=(/1/), undistUBound=(/2/), rc=rc)

call ESMF_ArraySpecSet(arrayspec, typekind=ESMF_TYPEKIND_R8, rank=2, rc=rc)
dstArray = ESMF_ArrayCreate(arrayspec=arrayspec, distgrid=dstDistgrid, &
  distgridToArrayMap=(/2/), undistLBound=(/1/), undistUBound=(/4/), rc=rc)
```

Setting up `factorList` is identical to the previous cases since there is still only one value associated with each non-zero matrix element. However, each entry in `factorIndexList` now has 4 instead of just 2 components.

```
if (localPet == 0) then
  allocate(factorList(1))                ! PET 0 specifies 1 factor
  allocate(factorIndexList(4,1))
  factorList = (/0.2/)                   ! factors
  factorIndexList(1,:) = (/5/)           ! seq indices into srcArray
  factorIndexList(2,:) = (/1/)           ! undistr. seq indices into srcArray
  factorIndexList(3,:) = (/30/)          ! seq indices into dstArray
  factorIndexList(4,:) = (/2/)           ! undistr. seq indices into dstArray

  call ESMF_ArraySMMStore(srcArray=srcArray, dstArray=dstArray, &
    routehandle=sparseMatMulHandle, factorList=factorList, &
    factorIndexList=factorIndexList, rc=rc)




  deallocate(factorList)
  deallocate(factorIndexList)
else if (localPet == 1) then
  allocate(factorList(3))                ! PET 1 specifies 3 factor
  allocate(factorIndexList(4,3))
  factorList = (/0.5, 0.5, 0.8/)         ! factors
  factorIndexList(1,:) = (/8, 2, 12/)    ! seq indices into srcArray
  factorIndexList(2,:) = (/2, 1, 1/)     ! undistr. seq indices into srcArray
  factorIndexList(3,:) = (/11, 11, 30/) ! seq indices into dstArray
  factorIndexList(4,:) = (/4, 4, 2/)     ! undistr. seq indices into dstArray

  call ESMF_ArraySMMStore(srcArray=srcArray, dstArray=dstArray, &
    routehandle=sparseMatMulHandle, factorList=factorList, &
    factorIndexList=factorIndexList, rc=rc)
```

```
    deallocate(factorList)
    deallocate(factorIndexList)
  else
    ! PETs 2 and 3 do not provide factors

    call ESMF_ArraySMMStore(srcArray=srcArray, dstArray=dstArray, &
      routehandle=sparseMatMulHandle, rc=rc)


  endif
```

The call into the `ESMF_ArraySMM()` operation remains unchanged.

```
  call ESMF_ArraySMM(srcArray=srcArray, dstArray=dstArray, &
    routehandle=sparseMatMulHandle, rc=rc)
```

This operation will initialize the entire `dstArray` to 0.0 and then update two elements:

```
   on DE 1:
   dstArray[4](2) = 0.5 * srcArray(0,0)[1]  +  0.5 * srcArray(0,2)[2],
```

and

```
   on DE 3:
   dstArray[2](1) = 0.2 * srcArray(0,1)[1]  +  0.8 * srcArray(1,3)[1],
```

Here indices in () refer to distributed dimensions while indices in [] correspond to undistributed dimensions.

29.2.19 Communication – Scatter and Gather, revisited

The `ESMF_ArrayScatter()` and `ESMF_ArrayGather()` calls, introduced in section 29.2.14, provide a convenient way of communicating data between a Fortran array and all of the DEs of a single Array tile. A key requirement of `ESMF_ArrayScatter()` and `ESMF_ArrayGather()` is that the *shape* of the Fortran array and the Array tile must match. This means that the `dimCount` must be equal, and that the size of each dimension must match. Element reordering during scatter and gather is only supported on a per dimension level, based on the `decompflag` option available during DistGrid creation.

While the `ESMF_ArrayScatter()` and `ESMF_ArrayGather()` methods cover a broad, and important spectrum of cases, there are situations that require a different set of rules to scatter and gather data between a Fortran array and an ESMF Array object. For instance, it is often convenient to create an Array on a DistGrid that was created with arbitrary, user-supplied sequence indices. See section 37.3.5 for more background on DistGrids with arbitrary sequence indices.

```
  allocate(arbSeqIndexList(10))   ! each PET will have 10 elements

  do i=1, 10
    arbSeqIndexList(i) = (i-1)*petCount + localPet+1 ! initialize unique
```

```
                                                    ! seq. indices
enddo

distgrid = ESMF_DistGridCreate(arbSeqIndexList=arbSeqIndexList, rc=rc)

deallocate(arbSeqIndexList)

call ESMF_ArraySpecSet(arrayspec, typekind=ESMF_TYPEKIND_I4, rank=1, rc=rc)

array = ESMF_ArrayCreate(arrayspec=arrayspec, distgrid=distgrid, rc=rc)
```

This `array` object holds 10 elements on each DE, and there is one DE per PET, for a total element count of 10 x `petCount`. The `arbSeqIndexList`, used during DistGrid creation, was constructed cyclic across all DEs. DE 0, for example, on a 4 PET run, would hold sequence indices 1, 5, 9, ... DE 1 would hold 2, 6, 10, ..., and so on.

The usefulness of the user-specified arbitrary sequence indices becomes clear when they are interpreted as global element ids. The ArrayRedist() and ArraySMM() communication methods are based on sequence index mapping between source and destination Arrays. Other than providing a canonical sequence index order via the default sequence scheme, outlined in 29.2.18, ESMF does not place any restrictions on the sequence indices. Objects that were not created with user supplied sequence indices default to the ESMF sequence index order.

A common, and useful interpretation of the arbitrary sequence indices, specified during DistGrid creation, is that of relating them to the canonical ESMF sequence index order of another data object. Within this interpretation the `array` object created above could be viewed as an arbitrary distribution of a (`petCount` x 10) 2D array.

```
if (localPet == 0) then
  allocate(farray(petCount,10)) ! allocate 2D Fortran array petCount x 10
  do j=1, 10
    do i=1, petCount
      farray(i,j) = 100 + (j-1)*petCount + i    ! initialize to something
    enddo
  enddo
else
  allocate(farray(0,0)) ! must allocate an array of size 0 on all other PETs
endif
```

For a 4 PET run, `farray` on PET 0 now holds the following data.

```
 -----1----2----3------------10-----> j
 |
 1   101, 105, 109, ....  , 137
 |
 2   102, 106, 110, ....  , 138
 |
 3   103, 107, 111, ....  , 139
 |
 4   104, 108, 112, ....  , 140
 |
 |
 v
i
```

On all other PETs `farray` has a zero size allocation.

Following the sequence index interpretation from above, scattering the data contained in `farray` on PET 0 across the `array` object created further up, seems like a well defined operation. Looking at it a bit closer, it becomes clear that it is in fact more of a redistribution than a simple scatter operation. The general rule for such a "redist-scatter" operation, of a Fortran array, located on a single PET, into an ESMF Array, is to use the canonical ESMF sequence index scheme to label the elements of the Fortran array, and to send the data to the Array element with the same sequence index.

The just described "redist-scatter" operation is much more general than the standard `ESMF_ArrayScatter()` method. It does not require shape matching, and supports full element reordering based on the sequence indices. Before `farray` can be scattered across `array` in the described way, it must be wrapped into an ESMF Array object itself, essentially labeling the array elements according to the canonical sequence index scheme.

```
distgridAux = ESMF_DistGridCreate(minIndex=(/1,1/), &
  maxIndex=(/petCount,10/), &
  regDecomp=(/1,1/), rc=rc) ! DistGrid with only 1 DE
```

The first step is to create a DistGrid object with only a single DE. This DE must be located on the PET on which the Fortran data array resides. In this example `farray` holds data on PET 0, which is where the default DELayout will place the single DE defined in the DistGrid. If the `farray` was setup on a different PET, an explicit DELayout would need to be created first, mapping the only DE to the PET on which the data is defined.

Next the Array wrapper object can be created from the `farray` and the just created DistGrid object.

```
arrayAux = ESMF_ArrayCreate(farray=farray, distgrid=distgridAux, &
  indexflag=ESMF_INDEX_DELOCAL, rc=rc)
```

At this point all of the pieces are in place to use `ESMF_ArrayRedist()` to do the "redist-scatter" operation. The typical store/execute/release pattern must be followed.

```
call ESMF_ArrayRedistStore(srcArray=arrayAux, dstArray=array, &
  routehandle=scatterHandle, rc=rc)

call ESMF_ArrayRedist(srcArray=arrayAux, dstArray=array, &
  routehandle=scatterHandle, rc=rc)
```

In this example, after `ESMF_ArrayRedist()` was called, the content of `array` on a 4 PET run would look like this:

```
PET 0:   101, 105, 109, ....  , 137
PET 1:   102, 106, 110, ....  , 138
PET 2:   103, 107, 111, ....  , 139
PET 3:   104, 108, 112, ....  , 140
```

Once set up, `scatterHandle` can be used repeatedly to scatter data from `farray` on PET 0 to all the DEs of `array`. All of the resources should be released once `scatterHandle` is no longer needed.

```
call ESMF_ArrayRedistRelease(routehandle=scatterHandle, rc=rc)
```

The opposite operation, i.e. *gathering* of the `array` data into `farray` on PET 0, follows a very similar setup. In fact, the `arrayAux` object already constructed for the scatter direction, can directly be re-used. The only thing that is different for the "redist-gather", are the `srcArray` and `dstArray` argument assignments, reflecting the opposite direction of data movement.

```
call ESMF_ArrayRedistStore(srcArray=array, dstArray=arrayAux, &
  routehandle=gatherHandle, rc=rc)

call ESMF_ArrayRedist(srcArray=array, dstArray=arrayAux, &
  routehandle=gatherHandle, rc=rc)
```

Just as for the scatter case, the `gatherHandle` can be used repeatedly to gather data from `array` into `farray` on PET 0. All of the resources should be released once `gatherHandle` is no longer needed.

```
call ESMF_ArrayRedistRelease(routehandle=gatherHandle, rc=rc)
```

Finally the wrapper Array `arrayAux` and the associated DistGrid object can also be destroyed.

```
call ESMF_ArrayDestroy(arrayAux, rc=rc)

call ESMF_DistGridDestroy(distgridAux, rc=rc)
```

Further, the primary data objects of this example must be deallocated and destroyed.

```
deallocate(farray)

call ESMF_ArrayDestroy(array, rc=rc)

call ESMF_DistGridDestroy(distgrid, rc=rc)
```

29.2.20 Non-blocking Communications

All `ESMF_RouteHandle` based communication methods, like `ESMF_ArrayRedist()`, `ESMF_ArrayHalo()` and `ESMF_ArraySMM()`, can be executed in blocking or non-blocking mode. The non-blocking feature is useful, for example, to overlap computation with communication, or to implement a more loosely synchronized inter-Component interaction scheme than is possible with the blocking communication mode.

Access to the non-blocking execution mode is provided uniformly across all RouteHandle based communication calls. Every such call contains the optional `routesyncflag` argument of type `ESMF_RouteSync_Flag`. Section 55.53 lists all of the valid settings for this flag.

It is an execution time decision to select whether to invoke a precomputed communication pattern, stored in a RouteHandle, in the blocking or non-blocking mode. Neither requires specifically precomputed RouteHandles - i.e. a RouteHandle is neither specifically blocking nor specifically non-blocking.

```
call ESMF_ArrayRedistStore(srcArray=srcArray, dstArray=dstArray, &
  routehandle=routehandle, rc=rc)
```

The returned RouteHandle `routehandle` can be used in blocking or non-blocking execution calls. The application is free to switch between both modes for the same RouteHandle.

By default `routesyncflag` is set to `ESMF_ROUTESYNC_BLOCKING` in all of the RouteHandle execution methods, and the behavior is that of the VM-wide collective communication calls described in the previous sections. In the blocking mode the user must assume that the communication call will not return until all PETs have exchanged the precomputed information. On the other hand, the user has no guarantee about the exact synchronization behavior, and it is unsafe to make specific assumptions. What is guaranteed in the blocking communication mode is that when the call returns on the local PET, all data exchanges associated with all local DEs have finished. This means that all in-bound data elements are valid and that all out-bound data elements can safely be overwritten by the user.

```
call ESMF_ArrayRedist(srcArray=srcArray, dstArray=dstArray, &
  routehandle=routehandle, routesyncflag=ESMF_ROUTESYNC_BLOCKING, rc=rc)
```

The same exchange pattern, that is encoded in `routehandle`, can be executed in non-blocking mode, simply by setting the appropriate `routesyncflag` when calling into `ESMF_ArrayRedist()`.

At first sight there are obvious similarities between the non-blocking RouteHandle based execution paradigm and the non-blocking message passing calls provided by MPI. However, there are significant differences in the behavior of the non-blocking point-to-point calls that MPI defines and the non-blocking mode of the collective exchange patterns described by ESMF RouteHandles.

Setting `routesyncflag` to `ESMF_ROUTESYNC_NBSTART` in any RouteHandle execution call returns immediately after all out-bound data has been moved into ESMF internal transfer buffers and the exchange has been initiated.

```
call ESMF_ArrayRedist(srcArray=srcArray, dstArray=dstArray, &
  routehandle=routehandle, routesyncflag=ESMF_ROUTESYNC_NBSTART, rc=rc)
```

Once a call with `routesyncflag = ESMF_ROUTESYNC_NBSTART` returns, it is safe to modify the out-bound data elements in the `srcArray` object. However, no guarantees are made for the in-bound data elements in `dstArray` at this phase of the non-blocking execution. It is unsafe to access these elements until the exchange has finished locally.

One way to ensure that the exchange has finished locally is to call with `routesyncflag` set to `ESMF_ROUTESYNC_NBWAITFINISH`.

```
call ESMF_ArrayRedist(srcArray=srcArray, dstArray=dstArray, &
  routehandle=routehandle, routesyncflag=ESMF_ROUTESYNC_NBWAITFINISH, rc=rc)
```

Calling with `routesyncflag = ESMF_ROUTESYNC_NBWAITFINISH` instructs the communication method to wait and block until the previously started exchange has finished, and has been processed locally according to the RouteHandle. Once the call returns, it is safe to access both in-bound and out-bound data elements in `dstArray` and `srcArray`, respectively.

Some situations require more flexibility than is provided by the `ESMF_ROUTESYNC_NBSTART` - `ESMF_ROUTESYNC_NBWAITFINISH` pair. For instance, a Component that needs to interact with several other Components, virtually simultaneously, would initiated several different exchanges with `ESMF_ROUTESYNC_NBSTART`. Calling with `ESMF_ROUTESYNC_NBWAITFINISH` for any of the outstanding exchanges may potentially block for a long time, lowering the throughput. In the worst case a dead lock situation may arise. Calling with `routesyncflag = ESMF_ROUTESYNC_NBTESTFINISH` addresses this problem.

```
call ESMF_ArrayRedist(srcArray=srcArray, dstArray=dstArray, &
  routehandle=routehandle, routesyncflag=ESMF_ROUTESYNC_NBTESTFINISH, &
  finishedflag=finishflag, rc=rc)
```

This call tests the locally outstanding data transfer operation in `routehandle`, and finishes the exchange as much as currently possible. It does not block until the entire exchange has finished locally, instead it returns immediately after one round of testing has been completed. The optional return argument `finishedflag` is set to `.true.` if the exchange is completely finished locally, and set to `.false.` otherwise.

The user code must decide, depending on the value of the returned `finishedflag`, whether additional calls are required to finish an outstanding non-blocking exchange. If so, it can be done by calling `ESMF_ArrayRedist()` repeatedly with `ESMF_ROUTESYNC_NBTESTFINISH` until `finishedflag` comes back with a value of `.true.`. Such a loop allows other pieces of user code to be executed between the calls. A call with `ESMF_ROUTESYNC_NBWAITFINISH` can alternatively be used to block until the exchange has locally finished.

Noteworthy property. It is allowable to invoke a RouteHandle based communication call with `routesyncflag` set to `ESMF_ROUTESYNC_NBTESTFINISH` or `ESMF_ROUTESYNC_NBWAITFINISH` on a specific RouteHandle without there being an outstanding non-blocking exchange. As a matter of fact, it is not required that there was ever a call made with `ESMF_ROUTESYNC_NBSTART` for the RouteHandle. In these cases the calls made with `ESMF_ROUTESYNC_NBTESTFINISH` or `ESMF_ROUTESYNC_NBWAITFINISH` will simply return immediately (with `finishedflag` set to `.true.`).

Noteworthy property. It is fine to mix blocking and non-blocking invocations of the same RouteHandle based communication call across the PETs. This means that it is fine for some PETs to issue the call with `ESMF_ROUTESYNC_BLOCKING` (or using the default), while other PETs call the same communication call with `ESMF_ROUTESYNC_NBSTART`.

Noteworthy restriction. A RouteHandle that is currently involved in an outstanding non-blocking exchange may *not* be used to start any further exchanges, neither blocking nor non-blocking. This restriction is independent of whether the newly started RouteHandle based exchange is made for the same or for different data objects.

29.3 Restrictions and Future Work

- **CAUTION:** Depending on the specific `ESMF_ArrayCreate()` entry point used during Array creation, certain Fortran operations are not supported on the Fortran array pointer `farrayPtr`, returned by `ESMF_ArrayGet()`. Only if the `ESMF_ArrayCreate()` *from pointer* variant was used, will the returned `farrayPtr` variable contain the original bounds information, and be suitable for the Fortran `deallocate()` call. This limitation is a direct consequence of the Fortran 95 standard relating to the passing of array arguments. Fortran array pointers returned from an Array that was created through the *assumed shape array* variant of `ESMF_ArrayCreate()` will have bounds that are consistent with the other arguments specified during Array creation. These pointers are not suitable for deallocation in accordance to the Fortran 95 standard.
- **1D limit:** ArrayHalo(), ArrayRedist() and ArraySMM() operations on Arrays created on DistGrids with arbitrary sequence indices are currently limited to 1D arbitrary DistGrids. There is no restriction on the number, size and mapping of undistributed Array dimensions in the presence of such a 1D arbitrary DistGrid.

29.4 Design and Implementation Notes

The Array class is part of the ESMF index space layer and is built on top of the DistGrid and DELayout classes. The DELayout class introduces the notion of *decomposition elements* (DEs) and their layout across the available PETs. The DistGrid describes how index space is decomposed by assigning *logically rectangular index space pieces* or *DE-local tiles* to the DEs. The Array finally associates a *local memory allocation* with each local DE.

The following is a list of implementation specific details about the current ESMF Array.

- Implementation language is C++.
- Local memory allocations are internally held in `ESMF_LocalArray` objects.
- All precomputed communication methods are based on sparse matrix multiplication.

29.5 Class API

29.5.1 ESMF_ArrayAssignment(=) - Array assignment

INTERFACE:

```
interface assignment(=)
array1 = array2
```

ARGUMENTS:

```
type(ESMF_Array) :: array1
type(ESMF_Array) :: array2
```

STATUS:

- This interface is backward compatible with ESMF versions starting at 5.2.0r. If code using this interface compiles with any version of ESMF starting with 5.2.0r, then it will compile with the current version.

DESCRIPTION:

Assign array1 as an alias to the same ESMF Array object in memory as array2. If array2 is invalid, then array1 will be equally invalid after the assignment.

The arguments are:

array1 The `ESMF_Array` object on the left hand side of the assignment.

array2 The `ESMF_Array` object on the right hand side of the assignment.

29.5.2 ESMF_ArrayOperator(==) - Array equality operator

INTERFACE:

```
interface operator(==)
if (array1 == array2) then ... endif
OR
result = (array1 == array2)
```

RETURN VALUE:

```
logical :: result
```

ARGUMENTS:

```
type(ESMF_Array), intent(in) :: array1
type(ESMF_Array), intent(in) :: array2
```

STATUS:

- This interface is backward compatible with ESMF versions starting at 5.2.0r. If code using this interface compiles with any version of ESMF starting with 5.2.0r, then it will compile with the current version.

DESCRIPTION:

Test whether array1 and array2 are valid aliases to the same ESMF Array object in memory. For a more general comparison of two ESMF Arrays, going beyond the simple alias test, the ESMF_ArrayMatch() function (not yet implemented) must be used.

The arguments are:

array1 The `ESMF_Array` object on the left hand side of the equality operation.

array2 The `ESMF_Array` object on the right hand side of the equality operation.

29.5.3 ESMF_ArrayOperator(/=) - Array not equal operator

INTERFACE:

```
interface operator(/=)
if (array1 /= array2) then ... endif
OR
result = (array1 /= array2)
```

RETURN VALUE:

```
logical :: result
```

ARGUMENTS:

```
type(ESMF_Array), intent(in) :: array1
type(ESMF_Array), intent(in) :: array2
```

STATUS:

- This interface is backward compatible with ESMF versions starting at 5.2.0r. If code using this interface compiles with any version of ESMF starting with 5.2.0r, then it will compile with the current version.

DESCRIPTION:

Test whether array1 and array2 are *not* valid aliases to the same ESMF Array object in memory. For a more general comparison of two ESMF Arrays, going beyond the simple alias test, the ESMF_ArrayMatch() function (not yet implemented) must be used.

The arguments are:

array1 The `ESMF_Array` object on the left hand side of the non-equality operation.

array2 The `ESMF_Array` object on the right hand side of the non-equality operation.

29.5.4 ESMF_ArrayCopy - Copy data from one Array object to another

INTERFACE:

```
subroutine ESMF_ArrayCopy(arrayOut, arrayIn, rc)
```

ARGUMENTS:

```
        type(ESMF_Array), intent(inout) :: arrayOut
        type(ESMF_Array), intent(in) :: arrayIn
 -- The following arguments require argument keyword syntax (e.g. rc=rc). --
        integer, intent(out), optional :: rc
```

DESCRIPTION:

Copy data from one `ESMF_Array` object to another.

The arguments are:

arrayOut `ESMF_Array` object into which to copy the data. The incoming `arrayOut` must already references a matching memory allocation.

arrayIn `ESMF_Array` object that holds the data to be copied.

[rc] Return code; equals `ESMF_SUCCESS` if there are no errors.

29.5.5 ESMF_ArrayCreate - Create Array object from Fortran array pointer

INTERFACE:

```
! Private name; call using ESMF_ArrayCreate()
function ESMF_ArrayCreateFrmPtr<rank><type><kind>(distgrid, farrayPtr, &
datacopyflag, distgridToArrayMap, computationalEdgeLWidth, &
computationalEdgeUWidth, computationalLWidth, &
computationalUWidth, totalLWidth, &
totalUWidth, name, rc)
```

RETURN VALUE:

```
type(ESMF_Array) :: ESMF_ArrayCreateDataPtr<rank><type><kind>
```

ARGUMENTS:

```
type(ESMF_DistGrid), intent(in) :: distgrid
<type> (ESMF_KIND_<kind>), pointer :: farrayPtr(<rank>)
```

```
-- The following arguments require argument keyword syntax (e.g. rc=rc). --
  type(ESMF_DataCopy_Flag), intent(in), optional :: datacopyflag
  integer, intent(in), optional :: distgridToArrayMap(:)
  integer, intent(in), optional :: computationalEdgeLWidth(:)
  integer, intent(in), optional :: computationalEdgeUWidth(:)
  integer, intent(in), optional :: computationalLWidth(:)
  integer, intent(in), optional :: computationalUWidth(:)
  integer, intent(in), optional :: totalLWidth(:)
  integer, intent(in), optional :: totalUWidth(:)
  character (len=*), intent(in), optional :: name
  integer, intent(out), optional :: rc
```

STATUS:

- This interface is backward compatible with ESMF versions starting at 5.2.0r. If code using this interface compiles with any version of ESMF starting with 5.2.0r, then it will compile with the current version.

DESCRIPTION:

Create an `ESMF_Array` object from existing local native Fortran arrays with pointer attribute. The decomposition and distribution is specified by the `distgrid` argument. Each PET must issue this call with identical arguments in order to create a consistent Array object. The only exception is the `farrayPtr` argument which will be different on each PET. The bounds of the local arrays are preserved by this call and determine the bounds of the total region of the resulting Array object. Bounds of the DE-local exclusive regions are set to be consistent with the total regions and the specified `distgrid` argument. Bounds for Array dimensions that are not distributed are automatically set to the bounds provided by `farrayPtr`.

This interface requires a 1 DE per PET decomposition. The Array object will not be created and an error will be returned if this condition is not met.

The not distributed Array dimensions form a tensor of rank = array.rank - distgrid.dimCount. The widths of the computational region are set to the provided value, or zero by default, for all tensor elements. Use `ESMF_ArraySet()` to change these default settings after the Array object has been created.

The return value is the newly created `ESMF_Array` object.

The arguments are:

distgrid `ESMF_DistGrid` object that describes how the array is decomposed and distributed over DEs. The dimCount of distgrid must be smaller or equal to the rank of `farrayPtr`.

farrayPtr Valid native Fortran array with pointer attribute. Memory must be associated with the actual argument. The type/kind/rank information of `farrayPtr` will be used to set `Array`'s properties accordingly. The shape of `farrayPtr` will be checked against the information contained in the `distgrid`. The bounds of `farrayPtr` will be preserved by this call and the bounds of the resulting Array object are set accordingly.

[datacopyflag] Specifies whether the Array object will reference the memory allocation provided by `farrayPtr` directly or will copy the data from `farrayPtr` into a new memory allocation. For valid values see 55.13. The default is `ESMF_DATACOPY_REFERENCE`. Note that the `ESMF_DATACOPY_REFERENCE` option may not be safe when providing an array slice in `farrayPtr`.

[distgridToArrayMap] List that contains as many elements as is indicated by `distgrids`'s dimCount. The list elements map each dimension of the DistGrid object to a dimension in `farrayPtr` by specifying the appropriate Array dimension index. The default is to map all of `distgrid`'s dimensions against the lower dimensions of the `farrayPtr` argument in sequence, i.e. `distgridToArrayMap = (/1, 2, .../)`.

Unmapped `farrayPtr` dimensions are not decomposed dimensions and form a tensor of rank = Array.rank - DistGrid.dimCount. All `distgridToArrayMap` entries must be greater than or equal to zero and smaller than or equal to the Array rank. It is erroneous to specify the same entry multiple times unless it is zero. If the Array rank is less than the DistGrid dimCount then the default distgridToArrayMap will contain zeros for the dimCount - rank rightmost entries. A zero entry in the `distgridToArrayMap` indicates that the particular DistGrid dimension will be replicating the Array across the DEs along this direction.

[computationalEdgeLWidth] This vector argument must have dimCount elements, where dimCount is specified in distgrid. It specifies the lower corner of the computational region with respect to the lower corner of the exclusive region for DEs that are located on the edge of a tile. The default is a zero vector.

[computationalEdgeUWidth] This vector argument must have dimCount elements, where dimCount is specified in distgrid. It specifies the upper corner of the computational region with respect to the upper corner of the exclusive region for DEs that are located on the edge of a tile. The default is a zero vector.

[computationalLWidth] This vector argument must have dimCount elements, where dimCount is specified in distgrid. It specifies the lower corner of the computational region with respect to the lower corner of the exclusive region. The default is a zero vector.

[computationalUWidth] This vector argument must have dimCount elements, where dimCount is specified in distgrid. It specifies the upper corner of the computational region with respect to the upper corner of the exclusive region. The default is a zero vector.

[totalLWidth] This vector argument must have dimCount elements, where dimCount is specified in distgrid. It specifies the lower corner of the total memory region with respect to the lower corner of the exclusive region. The default is to accommodate the union of exclusive and computational region exactly.

[totalUWidth] This vector argument must have dimCount elements, where dimCount is specified in distgrid. It specifies the upper corner of the total memory region with respect to the upper corner of the exclusive region. The default is a vector that contains the remaining number of elements in each direction as to fit the union of exclusive and computational region into the memory region provided by the `farrayPtr` argument.

[name] Name of the Array object.

[rc] Return code; equals `ESMF_SUCCESS` if there are no errors.

29.5.6 ESMF_ArrayCreate - Create Array object from Fortran array pointer w/ arbitrary seqIndices for halo

INTERFACE:

```
! Private name; call using ESMF_ArrayCreate()
function ESMF_ArrayCreateFrmPtrArb<indexkind><rank><type><kind>(distgrid, &
farrayPtr, haloSeqIndexList, datacopyflag, &
distgridToArrayMap, name, rc)
```

RETURN VALUE:

```
type(ESMF_Array) :: ESMF_ArrayCreateDataPtrArb<rank><type><kind>
```

ARGUMENTS:

```
  type(ESMF_DistGrid), intent(in) :: distgrid
  <type> (ESMF_KIND_<kind>), pointer :: farrayPtr(<rank>)
  integer(ESMF_KIND_<indexkind>), intent(in) :: haloSeqIndexList(:)
-- The following arguments require argument keyword syntax (e.g. rc=rc). --
  type(ESMF_DataCopy_Flag), intent(in), optional :: datacopyflag
  integer, intent(in), optional :: distgridToArrayMap(:)
  character (len=*), intent(in), optional :: name
  integer, intent(out), optional :: rc
```

STATUS:

- This interface is backward compatible with ESMF versions starting at 5.2.0r. If code using this interface compiles with any version of ESMF starting with 5.2.0r, then it will compile with the current version.

DESCRIPTION:

Create an `ESMF_Array` object from existing local native Fortran arrays with pointer attribute, according to distgrid. Besides `farrayPtr` each PET must issue this call with identical arguments in order to create a consistent Array object. The bounds of the local arrays are preserved by this call and determine the bounds of the total region of the resulting Array object. Bounds of the DE-local exclusive regions are set to be consistent with the total regions and the specified distgrid argument. Bounds for Array dimensions that are not distributed are automatically set to the bounds provided by `farrayPtr`.

This interface requires a 1 DE per PET decomposition. The Array object will not be created and an error will be returned if this condition is not met.

The not distributed Array dimensions form a tensor of rank = array.rank - distgrid.dimCount. The widths of the computational region are set to the provided value, or zero by default, for all tensor elements. Use `ESMF_ArraySet()` to change these default settings after the Array object has been created.

The return value is the newly created `ESMF_Array` object.

The arguments are:

distgrid `ESMF_DistGrid` object that describes how the array is decomposed and distributed over DEs. The dimCount of distgrid must be smaller or equal to the rank of `farrayPtr`.

farrayPtr Valid native Fortran array with pointer attribute. Memory must be associated with the actual argument. The type/kind/rank information of `farrayPtr` will be used to set `Array`'s properties accordingly. The shape of `farrayPtr` will be checked against the information contained in the `distgrid`. The bounds of `farrayPtr` will be preserved by this call and the bounds of the resulting Array object are set accordingly.

haloSeqIndexList One dimensional array containing sequence indices of local halo region. The size (and content) of `haloSeqIndexList` can (and typically will) be different on each PET. The `haloSeqIndexList` argument is of integer type, but can be of different kind in order to support both 32-bit (`ESMF_KIND_I4`) and 64-bit (`ESMF_KIND_I8`) indexing.

[datacopyflag] Specifies whether the Array object will reference the memory allocation provided by `farrayPtr` directly or will copy the data from `farrayPtr` into a new memory allocation. For valid values see 55.13. The default is `ESMF_DATACOPY_REFERENCE`. Note that the `ESMF_DATACOPY_REFERENCE` option may not be safe when providing an array slice in `farrayPtr`.

[distgridToArrayMap] List that contains as many elements as is indicated by `distgrids`'s dimCount. The list elements map each dimension of the DistGrid object to a dimension in `farrayPtr` by specifying the appropriate Array dimension index. The default is to map all of `distgrid`'s dimensions against the lower dimensions of the `farrayPtr` argument in sequence, i.e. `distgridToArrayMap = (/1, 2, .../)`.

Unmapped `farrayPtr` dimensions are not decomposed dimensions and form a tensor of rank = Array.rank - DistGrid.dimCount. All `distgridToArrayMap` entries must be greater than or equal to zero and smaller than or equal to the Array rank. It is erroneous to specify the same entry multiple times unless it is zero. If the Array rank is less than the DistGrid dimCount then the default distgridToArrayMap will contain zeros for the dimCount - rank rightmost entries. A zero entry in the `distgridToArrayMap` indicates that the particular DistGrid dimension will be replicating the Array across the DEs along this direction.

[name] Name of the Array object.

[rc] Return code; equals `ESMF_SUCCESS` if there are no errors.

29.5.7 ESMF_ArrayCreate - Create Array object from Fortran array

INTERFACE:

```
! Private name; call using ESMF_ArrayCreate()
function ESMF_ArrayCreateAsmdSp<rank><type><kind>(distgrid, farray, &
indexflag, datacopyflag, distgridToArrayMap, &
computationalEdgeLWidth, computationalEdgeUWidth, computationalLWidth, &
computationalUWidth, totalLWidth, &
totalUWidth, undistLBound, undistUBound, name, rc)
```

RETURN VALUE:

```
type(ESMF_Array) :: ESMF_ArrayCreateDataAssmdShape<rank><type><kind>
```

ARGUMENTS:

```
  type(ESMF_DistGrid), intent(in) :: distgrid
  <type> (ESMF_KIND_<kind>), intent(in), target :: farray(<rank>)
  type(ESMF_Index_Flag), intent(in) :: indexflag
-- The following arguments require argument keyword syntax (e.g. rc=rc). --
  type(ESMF_DataCopy_Flag), intent(in), optional :: datacopyflag
  integer, intent(in), optional :: distgridToArrayMap(:)
  integer, intent(in), optional :: computationalEdgeLWidth(:)
  integer, intent(in), optional :: computationalEdgeUWidth(:)
  integer, intent(in), optional :: computationalLWidth(:)
  integer, intent(in), optional :: computationalUWidth(:)
  integer, intent(in), optional :: totalLWidth(:)
  integer, intent(in), optional :: totalUWidth(:)
  integer, intent(in), optional :: undistLBound(:)
  integer, intent(in), optional :: undistUBound(:)
  character (len=*), intent(in), optional :: name
  integer, intent(out), optional :: rc
```

STATUS:

- This interface is backward compatible with ESMF versions starting at 5.2.0r. If code using this interface compiles with any version of ESMF starting with 5.2.0r, then it will compile with the current version.

DESCRIPTION:

Create an `ESMF_Array` object from an existing local native Fortran array. The decomposition and distribution is specified by the `distgrid` argument. Each PET must issue this call with identical arguments in order to create a consistent Array object. The only exception is the `farray` argument which will be different on each PET. The local arrays provided must be dimensioned according to the DE-local total region. Bounds of the exclusive regions are set as specified in the `distgrid` argument. Bounds for Array dimensions that are not distributed can be chosen freely using the `undistLBound` and `undistUBound` arguments.

This interface requires a 1 DE per PET decomposition. The Array object will not be created and an error will be returned if this condition is not met.

The not distributed Array dimensions form a tensor of rank = array.rank - distgrid.dimCount. The widths of the computational region are set to the provided value, or zero by default, for all tensor elements. Use `ESMF_ArraySet()` to change these default settings after the Array object has been created.

The return value is the newly created `ESMF_Array` object.

The arguments are:

distgrid `ESMF_DistGrid` object that describes how the array is decomposed and distributed over DEs. The dimCount of distgrid must be smaller or equal to the rank of farray.

farray Valid native Fortran array, i.e. memory must be associated with the actual argument. The type/kind/rank information of `farray` will be used to set `Array`'s properties accordingly. The shape of `farray` will be checked against the information contained in the `distgrid`.

indexflag Indicate how DE-local indices are defined. See section 55.29 for a list of valid indexflag options.

[datacopyflag] Specifies whether the Array object will reference the memory allocation provided by `farray` directly or will copy the data from `farray` into a new memory allocation. For valid values see 55.13. The default is `ESMF_DATACOPY_REFERENCE`. Note that the `ESMF_DATACOPY_REFERENCE` option may not be safe when providing an array slice in `farray`.

[distgridToArrayMap] List that contains as many elements as is indicated by `distgrids`'s dimCount. The list elements map each dimension of the DistGrid object to a dimension in `farray` by specifying the appropriate Array dimension index. The default is to map all of `distgrid`'s dimensions against the lower dimensions of the `farray` argument in sequence, i.e. `distgridToArrayMap = (/1, 2, .../)`. Unmapped `farray` dimensions are not decomposed dimensions and form a tensor of rank = Array.rank - DistGrid.dimCount. All `distgridToArrayMap` entries must be greater than or equal to zero and smaller than or equal to the Array rank. It is erroneous to specify the same entry multiple times unless it is zero. If the Array rank is less than the DistGrid dimCount then the default distgridToArrayMap will contain zeros for the dimCount - rank rightmost entries. A zero entry in the `distgridToArrayMap` indicates that the particular DistGrid dimension will be replicating the Array across the DEs along this direction.

[computationalEdgeLWidth] This vector argument must have dimCount elements, where dimCount is specified in distgrid. It specifies the lower corner of the computational region with respect to the lower corner of the exclusive region for DEs that are located on the edge of a tile. The default is a zero vector.

[computationalEdgeUWidth] This vector argument must have dimCount elements, where dimCount is specified in distgrid. It specifies the upper corner of the computational region with respect to the upper corner of the exclusive region for DEs that are located on the edge of a tile. The default is a zero vector.

[computationalLWidth] This vector argument must have dimCount elements, where dimCount is specified in distgrid. It specifies the lower corner of the computational region with respect to the lower corner of the exclusive region. The default is a zero vector.

[computationalUWidth] This vector argument must have dimCount elements, where dimCount is specified in distgrid. It specifies the upper corner of the computational region with respect to the upper corner of the exclusive region. The default is a zero vector.

[totalLWidth] This vector argument must have dimCount elements, where dimCount is specified in distgrid. It specifies the lower corner of the total memory region with respect to the lower corner of the exclusive region. The default is to accommodate the union of exclusive and computational region exactly.

[totalUWidth] This vector argument must have dimCount elements, where dimCount is specified in distgrid. It specifies the upper corner of the total memory region with respect to the upper corner of the exclusive region. The default is a vector that contains the remaining number of elements in each direction as to fit the union of exclusive and computational region into the memory region provided by the `farray` argument.

[undistLBound] Lower bounds for the array dimensions that are not distributed. By default lbound is 1.

[undistUBound] Upper bounds for the array dimensions that are not distributed. By default ubound is equal to the extent of the corresponding dimension in `farray`.

[name] Name of the Array object.

[rc] Return code; equals `ESMF_SUCCESS` if there are no errors.

29.5.8 ESMF_ArrayCreate - Create Array object from Fortran array w/ arbitrary seqIndices for halo

INTERFACE:

```
! Private name; call using ESMF_ArrayCreate()
function ESMF_ArrayCreateAsmdSpArb<indexkind><rank><type><kind>(distgrid, &
farray, indexflag, haloSeqIndexList, datacopyflag, &
distgridToArrayMap, computationalEdgeLWidth, computationalEdgeUWidth, &
computationalLWidth, computationalUWidth, totalLWidth, totalUWidth, &
undistLBound, undistUBound, name, rc)
```

RETURN VALUE:

```
type(ESMF_Array) :: ESMF_ArrayCreateDataAssmdShapeArb<rank><type><kind>
```

ARGUMENTS:

```
  type(ESMF_DistGrid), intent(in) :: distgrid
  <type> (ESMF_KIND_<kind>), intent(in), target :: farray(<rank>)
  type(ESMF_Index_Flag), intent(in) :: indexflag
  integer(ESMF_KIND_<indexkind>), intent(in) :: haloSeqIndexList(:)
-- The following arguments require argument keyword syntax (e.g. rc=rc). --
  type(ESMF_DataCopy_Flag), intent(in), optional :: datacopyflag
  integer, intent(in), optional :: distgridToArrayMap(:)
  integer, intent(in), optional :: computationalEdgeLWidth(:)
  integer, intent(in), optional :: computationalEdgeUWidth(:)
  integer, intent(in), optional :: computationalLWidth(:)
```

```
integer, intent(in), optional :: computationalUWidth(:)
integer, intent(in), optional :: totalLWidth(:)
integer, intent(in), optional :: totalUWidth(:)
integer, intent(in), optional :: undistLBound(:)
integer, intent(in), optional :: undistUBound(:)
character (len=*), intent(in), optional :: name
integer, intent(out), optional :: rc
```

STATUS:

- This interface is backward compatible with ESMF versions starting at 5.2.0r. If code using this interface compiles with any version of ESMF starting with 5.2.0r, then it will compile with the current version.

DESCRIPTION:

Create an `ESMF_Array` object from an existing local native Fortran array. The decomposition and distribution is specified by the `distgrid` argument. Each PET must issue this call with identical arguments in order to create a consistent Array object. The only exception is the `farray` argument which will be different on each PET. The local arrays provided must be dimensioned according to the DE-local total region. Bounds of the exclusive regions are set as specified in the `distgrid` argument. Bounds for Array dimensions that are not distributed can be chosen freely using the `undistLBound` and `undistUBound` arguments.

This interface requires a 1 DE per PET decomposition. The Array object will not be created and an error will be returned if this condition is not met.

The not distributed Array dimensions form a tensor of rank = array.rank - distgrid.dimCount. The widths of the computational region are set to the provided value, or zero by default, for all tensor elements. Use `ESMF_ArraySet()` to change these default settings after the Array object has been created.

The return value is the newly created `ESMF_Array` object.

The arguments are:

distgrid `ESMF_DistGrid` object that describes how the array is decomposed and distributed over DEs. The dimCount of distgrid must be smaller or equal to the rank of farray.

farray Valid native Fortran array, i.e. memory must be associated with the actual argument. The type/kind/rank information of `farray` will be used to set `Array`'s properties accordingly. The shape of `farray` will be checked against the information contained in the `distgrid`.

indexflag Indicate how DE-local indices are defined. See section 55.29 for a list of valid indexflag options.

haloSeqIndexList One dimensional array containing sequence indices of local halo region. The size (and content) of `haloSeqIndexList` can (and typically will) be different on each PET. The `haloSeqIndexList` argument is of integer type, but can be of different kind in order to support both 32-bit (`ESMF_KIND_I4`) and 64-bit (`ESMF_KIND_I8`) indexing.

[datacopyflag] Specifies whether the Array object will reference the memory allocation provided by `farray` directly or will copy the data from `farray` into a new memory allocation. For valid values see 55.13. The default is `ESMF_DATACOPY_REFERENCE`. Note that the `ESMF_DATACOPY_REFERENCE` option may not be safe when providing an array slice in `farray`.

[distgridToArrayMap] List that contains as many elements as is indicated by `distgrids`'s dimCount. The list elements map each dimension of the DistGrid object to a dimension in `farray` by specifying the appropriate Array dimension index. The default is to map all of `distgrid`'s dimensions against the lower dimensions of the `farray` argument in sequence, i.e. `distgridToArrayMap = (/1, 2, .../)`. Unmapped `farray`

dimensions are not decomposed dimensions and form a tensor of rank = Array.rank - DistGrid.dimCount. All `distgridToArrayMap` entries must be greater than or equal to zero and smaller than or equal to the Array rank. It is erroneous to specify the same entry multiple times unless it is zero. If the Array rank is less than the DistGrid dimCount then the default distgridToArrayMap will contain zeros for the dimCount - rank rightmost entries. A zero entry in the `distgridToArrayMap` indicates that the particular DistGrid dimension will be replicating the Array across the DEs along this direction.

[computationalEdgeLWidth] This vector argument must have dimCount elements, where dimCount is specified in distgrid. It specifies the lower corner of the computational region with respect to the lower corner of the exclusive region for DEs that are located on the edge of a tile. The default is a zero vector.

[computationalEdgeUWidth] This vector argument must have dimCount elements, where dimCount is specified in distgrid. It specifies the upper corner of the computational region with respect to the upper corner of the exclusive region for DEs that are located on the edge of a tile. The default is a zero vector.

[computationalLWidth] This vector argument must have dimCount elements, where dimCount is specified in distgrid. It specifies the lower corner of the computational region with respect to the lower corner of the exclusive region. The default is a zero vector.

[computationalUWidth] This vector argument must have dimCount elements, where dimCount is specified in distgrid. It specifies the upper corner of the computational region with respect to the upper corner of the exclusive region. The default is a zero vector.

[totalLWidth] This vector argument must have dimCount elements, where dimCount is specified in distgrid. It specifies the lower corner of the total memory region with respect to the lower corner of the exclusive region. The default is to accommodate the union of exclusive and computational region exactly.

[totalUWidth] This vector argument must have dimCount elements, where dimCount is specified in distgrid. It specifies the upper corner of the total memory region with respect to the upper corner of the exclusive region. The default is a vector that contains the remaining number of elements in each direction as to fit the union of exclusive and computational region into the memory region provided by the `farray` argument.

[undistLBound] Lower bounds for the array dimensions that are not distributed. By default lbound is 1.

[undistUBound] Upper bounds for the array dimensions that are not distributed. By default ubound is equal to the extent of the corresponding dimension in `farray`.

[name] Name of the Array object.

[rc] Return code; equals `ESMF_SUCCESS` if there are no errors.

29.5.9 ESMF_ArrayCreate - Create Array object from a list of LocalArray objects

INTERFACE:

```
! Private name; call using ESMF_ArrayCreate()
function ESMF_ArrayCreateLocalArray(distgrid, localarrayList, &
  indexflag, datacopyflag, distgridToArrayMap, computationalEdgeLWidth, &
  computationalEdgeUWidth, computationalLWidth, computationalUWidth, &
  totalLWidth, totalUWidth, undistLBound, undistUBound, name, rc)
```

RETURN VALUE:

```
type(ESMF_Array) :: ESMF_ArrayCreateLocalArray
```

ARGUMENTS:

```
        type(ESMF_DistGrid), intent(in) :: distgrid
        type(ESMF_LocalArray), intent(in) :: localarrayList(:)
 -- The following arguments require argument keyword syntax (e.g. rc=rc). --
        type(ESMF_Index_Flag), intent(in), optional :: indexflag
        type(ESMF_DataCopy_Flag),intent(in), optional :: datacopyflag
        integer, intent(in), optional :: distgridToArrayMap(:)
        integer, intent(in), optional :: computationalEdgeLWidth(:)
        integer, intent(in), optional :: computationalEdgeUWidth(:)
        integer, intent(in), optional :: computationalLWidth(:)
        integer, intent(in), optional :: computationalUWidth(:)
        integer, intent(in), optional :: totalLWidth(:)
        integer, intent(in), optional :: totalUWidth(:)
        integer, intent(in), optional :: undistLBound(:)
        integer, intent(in), optional :: undistUBound(:)
        character (len=*), intent(in), optional :: name
        integer, intent(out), optional :: rc
```

STATUS:

- This interface is backward compatible with ESMF versions starting at 5.2.0r. If code using this interface compiles with any version of ESMF starting with 5.2.0r, then it will compile with the current version.

DESCRIPTION:

Create an `ESMF_Array` object from existing `ESMF_LocalArray` objects. The decomposition and distribution is specified by the `distgrid` argument. Each PET must issue this call with identical arguments in order to create a consistent Array object. The only exception is the `localarrayList` argument which will be different on each PET. The local arrays provided must be dimensioned according to the DE-local total region. Bounds of the exclusive regions are set as specified in the `distgrid` argument. Bounds for Array dimensions that are not distributed can be chosen freely using the `undistLBound` and `undistUBound` arguments.

This interface is able to handle multiple DEs per PET.

The not distributed Array dimensions form a tensor of rank = array.rank - distgrid.dimCount. The widths of the computational region are set to the provided value, or zero by default, for all tensor elements. Use `ESMF_ArraySet()` to change these default settings after the Array object has been created.

The return value is the newly created `ESMF_Array` object.

The arguments are:

distgrid `ESMF_DistGrid` object that describes how the array is decomposed and distributed over DEs. The dimCount of distgrid must be smaller or equal to the rank specified in arrayspec, otherwise a runtime ESMF error will be raised.

localarrayList List of valid `ESMF_LocalArray` objects, i.e. memory must be associated with the actual arguments. The type/kind/rank information of all `localarrayList` elements must be identical and will be used to set `Array`'s properties accordingly. The shape of each `localarrayList` element will be checked against the information contained in the `distgrid`.

[indexflag] Indicate how DE-local indices are defined. By default, the exclusive region of each DE is placed to start at the local index space origin, i.e. (1, 1, ..., 1). Alternatively the DE-local index space can be aligned with the global index space, if a global index space is well defined by the associated DistGrid. See section 55.29 for a list of valid indexflag options.

[datacopyflag] Specifies whether the Array object will reference the memory allocation of the arrays provided in `localarrayList` directly, or will copy the actual data into new memory allocations. For valid values see 55.13. The default is `ESMF_DATACOPY_REFERENCE`.

[distgridToArrayMap] List that contains as many elements as is indicated by `distgrids`'s dimCount. The list elements map each dimension of the DistGrid object to a dimension in the `localarrayList` elements by specifying the appropriate Array dimension index. The default is to map all of `distgrid`'s dimensions against the lower dimensions of the `localarrayList` elements in sequence, i.e. `distgridToArrayMap = (/1, 2, .../)`. Unmapped dimensions in the `localarrayList` elements are not decomposed dimensions and form a tensor of rank = Array.rank - DistGrid.dimCount. All `distgridToArrayMap` entries must be greater than or equal to zero and smaller than or equal to the Array rank. It is erroneous to specify the same entry multiple times unless it is zero. If the Array rank is less than the DistGrid dimCount then the default distgridToArrayMap will contain zeros for the dimCount - rank rightmost entries. A zero entry in the `distgridToArrayMap` indicates that the particular DistGrid dimension will be replicating the Array across the DEs along this direction.

[computationalEdgeLWidth] This vector argument must have dimCount elements, where dimCount is specified in distgrid. It specifies the lower corner of the computational region with respect to the lower corner of the exclusive region for DEs that are located on the edge of a tile.

[computationalEdgeUWidth] This vector argument must have dimCount elements, where dimCount is specified in distgrid. It specifies the upper corner of the computational region with respect to the upper corner of the exclusive region for DEs that are located on the edge of a tile.

[computationalLWidth] This vector argument must have dimCount elements, where dimCount is specified in distgrid. It specifies the lower corner of the computational region with respect to the lower corner of the exclusive region. The default is a zero vector.

[computationalUWidth] This vector argument must have dimCount elements, where dimCount is specified in distgrid. It specifies the upper corner of the computational region with respect to the upper corner of the exclusive region. The default is a zero vector.

[totalLWidth] This vector argument must have dimCount elements, where dimCount is specified in distgrid. It specifies the lower corner of the total memory region with respect to the lower corner of the exclusive region. The default is to accommodate the union of exclusive and computational region exactly.

[totalUWidth] This vector argument must have dimCount elements, where dimCount is specified in distgrid. It specifies the upper corner of the total memory region with respect to the upper corner of the exclusive region. The default is a vector that contains the remaining number of elements in each direction as to fit the union of exclusive and computational region into the memory region provided by the `localarrayList` argument.

[undistLBound] Lower bounds for the array dimensions that are not distributed. By default lbound is 1.

[undistUBound] Upper bounds for the array dimensions that are not distributed. By default ubound is equal to the extent of the corresponding dimension in `localarrayList`.

[name] Name of the Array object.

[rc] Return code; equals `ESMF_SUCCESS` if there are no errors.

29.5.10 ESMF_ArrayCreate - Create Array object from a list of LocalArray objects w/ arbitrary seqIndices for halo

INTERFACE:

```
! Private name; call using ESMF_ArrayCreate()
function ESMF_ArrayCreateLocalArrayArb<indexkind>(distgrid, localarrayList, &
haloSeqIndexList, indexflag, datacopyflag, &
distgridToArrayMap, computationalEdgeLWidth, computationalEdgeUWidth, &
computationalLWidth, computationalUWidth, &
totalLWidth, totalUWidth, undistLBound, undistUBound, name, rc)
```

RETURN VALUE:

```
type(ESMF_Array) :: ESMF_ArrayCreateLocalArrayArb
```

ARGUMENTS:

```
  type(ESMF_DistGrid), intent(in) :: distgrid
  type(ESMF_LocalArray), intent(in) :: localarrayList(:)
  integer(ESMF_KIND_<indexkind>), intent(in) :: haloSeqIndexList(:)
-- The following arguments require argument keyword syntax (e.g. rc=rc). --
  type(ESMF_Index_Flag), intent(in), optional :: indexflag
  type(ESMF_DataCopy_Flag),intent(in), optional :: datacopyflag
  integer, intent(in), optional :: distgridToArrayMap(:)
  integer, intent(in), optional :: computationalEdgeLWidth(:)
  integer, intent(in), optional :: computationalEdgeUWidth(:)
  integer, intent(in), optional :: computationalLWidth(:)
  integer, intent(in), optional :: computationalUWidth(:)
  integer, intent(in), optional :: totalLWidth(:)
  integer, intent(in), optional :: totalUWidth(:)
  integer, intent(in), optional :: undistLBound(:)
  integer, intent(in), optional :: undistUBound(:)
  character (len=*), intent(in), optional :: name
  integer, intent(out), optional :: rc
```

STATUS:

- This interface is backward compatible with ESMF versions starting at 5.2.0r. If code using this interface compiles with any version of ESMF starting with 5.2.0r, then it will compile with the current version.
- This interface was modified since ESMF version 5.2.0r. The fact that code using this interface compiles with the current ESMF version does not guarantee that it compiles with previous versions of this interface. If user code compatibility with version 5.2.0r is desired then care must be taken to limit the use of this interface to features that were available in the 5.2.0r release.
  Changes made after the 5.2.0r release:

  7.0.0 Added arguments `indexflag`, `computationalEdgeLWidth`, `computationalEdgeUWidth`, `computationalLWidth`, `computationalUWidth`, `totalLWidth`, `totalUWidth`. These arguments were missed in previous versions by mistake.

DESCRIPTION:

Create an `ESMF_Array` object from existing `ESMF_LocalArray` objects according to distgrid. Each PET must issue this call in unison in order to create a consistent Array object. The local arrays provided must be dimensioned according to the DE-local total region. Bounds of the exclusive regions are set as specified in the distgrid argument. Bounds for array dimensions that are not distributed can be chosen freely using the `undistLBound` and `undistUBound` arguments.

The return value is the newly created `ESMF_Array` object.

The arguments are:

distgrid `ESMF_DistGrid` object that describes how the array is decomposed and distributed over DEs. The dimCount of distgrid must be smaller or equal to the rank specified in arrayspec, otherwise a runtime ESMF error will be raised.

localarrayList List of valid `ESMF_LocalArray` objects, i.e. memory must be associated with the actual arguments. The type/kind/rank information of all `localarrayList` elements must be identical and will be used to set `Array`'s properties accordingly. The shape of each `localarrayList` element will be checked against the information contained in the `distgrid`.

haloSeqIndexList One dimensional array containing sequence indices of local halo region. The size (and content) of `haloSeqIndexList` can (and typically will) be different on each PET. The `haloSeqIndexList` argument is of integer type, but can be of different kind in order to support both 32-bit (`ESMF_KIND_I4`) and 64-bit (`ESMF_KIND_I8`) indexing.

[indexflag] Indicate how DE-local indices are defined. By default, the exclusive region of each DE is placed to start at the local index space origin, i.e. (1, 1, ..., 1). Alternatively the DE-local index space can be aligned with the global index space, if a global index space is well defined by the associated DistGrid. See section 55.29 for a list of valid indexflag options.

[datacopyflag] Specifies whether the Array object will reference the memory allocation of the arrays provided in `localarrayList` directly, or will copy the actual data into new memory allocations. For valid values see 55.13. The default is `ESMF_DATACOPY_REFERENCE`.

[distgridToArrayMap] List that contains as many elements as is indicated by `distgrids`'s dimCount. The list elements map each dimension of the DistGrid object to a dimension in the `localarrayList` elements by specifying the appropriate Array dimension index. The default is to map all of `distgrid`'s dimensions against the lower dimensions of the `localarrayList` elements in sequence, i.e. `distgridToArrayMap = (/1, 2, .../)`. Unmapped dimensions in the `localarrayList` elements are not decomposed dimensions and form a tensor of rank = Array.rank - DistGrid.dimCount. All `distgridToArrayMap` entries must be greater than or equal to zero and smaller than or equal to the Array rank. It is erroneous to specify the same entry multiple times unless it is zero. If the Array rank is less than the DistGrid dimCount then the default distgridToArrayMap will contain zeros for the dimCount - rank rightmost entries. A zero entry in the `distgridToArrayMap` indicates that the particular DistGrid dimension will be replicating the Array across the DEs along this direction.

[computationalEdgeLWidth] This vector argument must have dimCount elements, where dimCount is specified in distgrid. It specifies the lower corner of the computational region with respect to the lower corner of the exclusive region for DEs that are located on the edge of a tile.

[computationalEdgeUWidth] This vector argument must have dimCount elements, where dimCount is specified in distgrid. It specifies the upper corner of the computational region with respect to the upper corner of the exclusive region for DEs that are located on the edge of a tile.

[computationalLWidth] This vector argument must have dimCount elements, where dimCount is specified in distgrid. It specifies the lower corner of the computational region with respect to the lower corner of the exclusive region. The default is a zero vector.

[computationalUWidth] This vector argument must have dimCount elements, where dimCount is specified in distgrid. It specifies the upper corner of the computational region with respect to the upper corner of the exclusive region. The default is a zero vector.

[totalLWidth] This vector argument must have dimCount elements, where dimCount is specified in distgrid. It specifies the lower corner of the total memory region with respect to the lower corner of the exclusive region. The default is to accommodate the union of exclusive and computational region exactly.

[totalUWidth] This vector argument must have dimCount elements, where dimCount is specified in distgrid. It specifies the upper corner of the total memory region with respect to the upper corner of the exclusive region. The default is a vector that contains the remaining number of elements in each direction as to fit the union of exclusive and computational region into the memory region provided by the `localarrayList` argument.

[undistLBound] Lower bounds for the array dimensions that are not distributed. By default lbound is 1.

[undistUBound] Upper bounds for the array dimensions that are not distributed. By default ubound is equal to the extent of the corresponding dimension in `localarrayList`.

[name] Name of the Array object.

[rc] Return code; equals `ESMF_SUCCESS` if there are no errors.

29.5.11 ESMF_ArrayCreate - Create Array object from typekind (allocate memory)

INTERFACE:

```
! Private name; call using ESMF_ArrayCreate()
function ESMF_ArrayCreateAllocate(distgrid, typekind, &
  indexflag, pinflag, distgridToArrayMap, computationalEdgeLWidth, &
  computationalEdgeUWidth, computationalLWidth, computationalUWidth, &
  totalLWidth, totalUWidth, undistLBound, undistUBound, name, vm, rc)
```

RETURN VALUE:

```
type(ESMF_Array) :: ESMF_ArrayCreateAllocate
```

ARGUMENTS:

```
        type(ESMF_DistGrid), intent(in) :: distgrid
        type(ESMF_TypeKind_Flag), intent(in) :: typekind
 -- The following arguments require argument keyword syntax (e.g. rc=rc). --
        type(ESMF_Index_Flag), intent(in), optional :: indexflag
        type(ESMF_Pin_Flag), intent(in), optional :: pinflag
        integer, intent(in), optional :: distgridToArrayMap(:)
        integer, intent(in), optional :: computationalEdgeLWidth(:)
        integer, intent(in), optional :: computationalEdgeUWidth(:)
        integer, intent(in), optional :: computationalLWidth(:)
        integer, intent(in), optional :: computationalUWidth(:)
        integer, intent(in), optional :: totalLWidth(:)
        integer, intent(in), optional :: totalUWidth(:)
        integer, intent(in), optional :: undistLBound(:)
        integer, intent(in), optional :: undistUBound(:)
        character (len=*), intent(in), optional :: name
        type(ESMF_VM), intent(in), optional :: vm
        integer, intent(out), optional :: rc
```

STATUS:

- This interface is backward compatible with ESMF versions starting at 5.2.0r. If code using this interface compiles with any version of ESMF starting with 5.2.0r, then it will compile with the current version.
- This interface was modified since ESMF version 5.2.0r. The fact that code using this interface compiles with the current ESMF version does not guarantee that it compiles with previous versions of this interface. If user code compatibility with version 5.2.0r is desired then care must be taken to limit the use of this interface to features that were available in the 5.2.0r release.
  Changes made after the 5.2.0r release:

  6.3.0r Added argument `vm` to support object creation on a different VM than that of the current context.

  8.0.0 Added argument `pinflag` to provide access to DE sharing between PETs.

DESCRIPTION:

Create an `ESMF_Array` object and allocate uninitialized data space according to typekind and distgrid. The Array rank is indirectly determined by the incoming information. Each PET must issue this call in unison in order to create a consistent Array object. DE-local allocations are made according to the total region defined by the `distgrid` and the optional `Width` arguments.

The return value is the newly created `ESMF_Array` object.

The arguments are:

distgrid `ESMF_DistGrid` object that describes how the array is decomposed and distributed over DEs. The dimCount of distgrid must be smaller or equal to the rank specified in arrayspec, otherwise a runtime ESMF error will be raised.

typekind The typekind of the Array. See section 55.61 for a list of valid typekind options.

[indexflag] Indicate how DE-local indices are defined. By default, the exclusive region of each DE is placed to start at the local index space origin, i.e. (1, 1, ..., 1). Alternatively the DE-local index space can be aligned with the global index space, if a global index space is well defined by the associated DistGrid. See section 55.29 for a list of valid indexflag options.

[pinflag] Specify which type of resource DEs are pinned to. See section 51.2.1 for a list of valid pinning options. The default is to pin DEs to PETs, i.e. only the PET on which a DE was created considers the DE as local.

[distgridToArrayMap] List that contains as many elements as is indicated by `distgrids`'s dimCount. The list elements map each dimension of the DistGrid object to a dimension in the newly allocated Array object by specifying the appropriate Array dimension index. The default is to map all of `distgrid`'s dimensions against the lower dimensions of the Array object in sequence, i.e. `distgridToArrayMap = (/1, 2, .../)`. Unmapped dimensions in the Array object are not decomposed dimensions and form a tensor of rank = Array.rank - DistGrid.dimCount. All `distgridToArrayMap` entries must be greater than or equal to zero and smaller than or equal to the Array rank. It is erroneous to specify the same entry multiple times unless it is zero. If the Array rank is less than the DistGrid dimCount then the default distgridToArrayMap will contain zeros for the dimCount - rank rightmost entries. A zero entry in the `distgridToArrayMap` indicates that the particular DistGrid dimension will be replicating the Array across the DEs along this direction.

[computationalEdgeLWidth] This vector argument must have dimCount elements, where dimCount is specified in distgrid. It specifies the lower corner of the computational region with respect to the lower corner of the exclusive region for DEs that are located on the edge of a tile.

[computationalEdgeUWidth] This vector argument must have dimCount elements, where dimCount is specified in distgrid. It specifies the upper corner of the computational region with respect to the upper corner of the exclusive region for DEs that are located on the edge of a tile.

[computationalLWidth] This vector argument must have dimCount elements, where dimCount is specified in distgrid. It specifies the lower corner of the computational region with respect to the lower corner of the exclusive region. The default is a zero vector.

[computationalUWidth] This vector argument must have dimCount elements, where dimCount is specified in distgrid. It specifies the upper corner of the computational region with respect to the upper corner of the exclusive region. The default is a zero vector.

[totalLWidth] This vector argument must have dimCount elements, where dimCount is specified in distgrid. It specifies the lower corner of the total memory region with respect to the lower corner of the exclusive region. The default is to accommodate the union of exclusive and computational region.

[totalUWidth] This vector argument must have dimCount elements, where dimCount is specified in distgrid. It specifies the upper corner of the total memory region with respect to the upper corner of the exclusive region. The default is to accommodate the union of exclusive and computational region.

[undistLBound] Lower bounds for the array dimensions that are not distributed.

[undistUBound] Upper bounds for the array dimensions that are not distributed.

[name] Name of the Array object.

[vm] If present, the Array object is created on the specified `ESMF_VM` object. The default is to create on the VM of the current context.

[rc] Return code; equals `ESMF_SUCCESS` if there are no errors.

29.5.12 ESMF_ArrayCreate - Create Array object from typekind (allocate memory) w/ arbitrary seqIndices for halo

INTERFACE:

```
! Private name; call using ESMF_ArrayCreate()
function ESMF_ArrayCreateAllocateArb<indexkind>(distgrid, typekind, &
haloSeqIndexList, pinflag, distgridToArrayMap, &
undistLBound, undistUBound, name, rc)
```

RETURN VALUE:

```
type(ESMF_Array) :: ESMF_ArrayCreateAllocateArb
```

ARGUMENTS:

```
  type(ESMF_DistGrid), intent(in) :: distgrid
  type(ESMF_TypeKind_Flag), intent(in) :: typekind
  integer(ESMF_KIND_<indexkind>), intent(in) :: haloSeqIndexList(:)
 -- The following arguments require argument keyword syntax (e.g. rc=rc). --
  type(ESMF_Pin_Flag), intent(in), optional :: pinflag
  integer, intent(in), optional :: distgridToArrayMap(:)
  integer, intent(in), optional :: undistLBound(:)
  integer, intent(in), optional :: undistUBound(:)
  character (len=*), intent(in), optional :: name
  integer, intent(out), optional :: rc
```

STATUS:

- This interface is backward compatible with ESMF versions starting at 5.2.0r. If code using this interface compiles with any version of ESMF starting with 5.2.0r, then it will compile with the current version.
- This interface was modified since ESMF version 5.2.0r. The fact that code using this interface compiles with the current ESMF version does not guarantee that it compiles with previous versions of this interface. If user code compatibility with version 5.2.0r is desired then care must be taken to limit the use of this interface to features that were available in the 5.2.0r release.
  Changes made after the 5.2.0r release:

  8.0.0 Added argument `pinflag` to provide access to DE sharing between PETs.

DESCRIPTION:

Create an `ESMF_Array` object and allocate uninitialized data space according to typekind and distgrid. The Array rank is indirectly determined by the incoming information. Each PET must issue this call in unison in order to create a consistent Array object. DE-local allocations are made according to the total region defined by the `distgrid` and `haloSeqIndexList` arguments.

The return value is the newly created `ESMF_Array` object.

The arguments are:

distgrid `ESMF_DistGrid` object that describes how the array is decomposed and distributed over DEs. The dimCount of distgrid must be smaller or equal to the rank specified in arrayspec, otherwise a runtime ESMF error will be raised.

typekind The typekind of the Array. See section 55.61 for a list of valid typekind options.

haloSeqIndexList One dimensional array containing sequence indices of local halo region. The size (and content) of `haloSeqIndexList` can (and typically will) be different on each PET. The `haloSeqIndexList` argument is of integer type, but can be of different kind in order to support both 32-bit (`ESMF_KIND_I4`) and 64-bit (`ESMF_KIND_I8`) indexing.

[pinflag] Specify which type of resource DEs are pinned to. See section 51.2.1 for a list of valid pinning options. The default is to pin DEs to PETs, i.e. only the PET on which a DE was created considers the DE as local.

[distgridToArrayMap] List that contains as many elements as is indicated by `distgrids`'s dimCount. The list elements map each dimension of the DistGrid object to a dimension in the newly allocated Array object by specifying the appropriate Array dimension index. The default is to map all of `distgrid`'s dimensions against the lower dimensions of the Array object in sequence, i.e. `distgridToArrayMap = (/1, 2, .../)`. Unmapped dimensions in the Array object are not decomposed dimensions and form a tensor of rank = Array.rank - DistGrid.dimCount. All `distgridToArrayMap` entries must be greater than or equal to zero and smaller than or equal to the Array rank. It is erroneous to specify the same entry multiple times unless it is zero. If the Array rank is less than the DistGrid dimCount then the default distgridToArrayMap will contain zeros for the dimCount - rank rightmost entries. A zero entry in the `distgridToArrayMap` indicates that the particular DistGrid dimension will be replicating the Array across the DEs along this direction.

[undistLBound] Lower bounds for the array dimensions that are not distributed.

[undistUBound] Upper bounds for the array dimensions that are not distributed.

[name] Name of the Array object.

[rc] Return code; equals `ESMF_SUCCESS` if there are no errors.

29.5.13 ESMF_ArrayCreate - Create Array object from ArraySpec (allocate memory)

INTERFACE:

```
! Private name; call using ESMF_ArrayCreate()
function ESMF_ArrayCreateAllocateAS(distgrid, arrayspec, &
  indexflag, pinflag, distgridToArrayMap, computationalEdgeLWidth, &
  computationalEdgeUWidth, computationalLWidth, computationalUWidth, &
  totalLWidth, totalUWidth, undistLBound, undistUBound, name, vm, rc)
```

RETURN VALUE:

```
type(ESMF_Array) :: ESMF_ArrayCreateAllocateAS
```

ARGUMENTS:

```
        type(ESMF_DistGrid), intent(in) :: distgrid
        type(ESMF_ArraySpec), intent(in) :: arrayspec
 -- The following arguments require argument keyword syntax (e.g. rc=rc). --
        type(ESMF_Index_Flag), intent(in), optional :: indexflag
        type(ESMF_Pin_Flag), intent(in), optional :: pinflag
        integer, intent(in), optional :: distgridToArrayMap(:)
        integer, intent(in), optional :: computationalEdgeLWidth(:)
        integer, intent(in), optional :: computationalEdgeUWidth(:)
        integer, intent(in), optional :: computationalLWidth(:)
        integer, intent(in), optional :: computationalUWidth(:)
        integer, intent(in), optional :: totalLWidth(:)
        integer, intent(in), optional :: totalUWidth(:)
        integer, intent(in), optional :: undistLBound(:)
        integer, intent(in), optional :: undistUBound(:)
        character (len=*), intent(in), optional :: name
        type(ESMF_VM), intent(in), optional :: vm
        integer, intent(out), optional :: rc
```

STATUS:

- This interface is backward compatible with ESMF versions starting at 5.2.0r. If code using this interface compiles with any version of ESMF starting with 5.2.0r, then it will compile with the current version.
- This interface was modified since ESMF version 5.2.0r. The fact that code using this interface compiles with the current ESMF version does not guarantee that it compiles with previous versions of this interface. If user code compatibility with version 5.2.0r is desired then care must be taken to limit the use of this interface to features that were available in the 5.2.0r release.
  Changes made after the 5.2.0r release:

  6.3.0r Added argument `vm` to support object creation on a different VM than that of the current context.

  8.0.0 Added argument `pinflag` to provide access to DE sharing between PETs.

DESCRIPTION:

Create an `ESMF_Array` object and allocate uninitialized data space according to arrayspec and distgrid. Each PET must issue this call with identical arguments in order to create a consistent Array object. DE-local allocations are made according to the total region defined by the arguments to this call: `distgrid` and the optional `Width` arguments.

The return value is the newly created `ESMF_Array` object.

The arguments are:

distgrid `ESMF_DistGrid` object that describes how the array is decomposed and distributed over DEs. The dimCount of distgrid must be smaller or equal to the rank specified in arrayspec, otherwise a runtime ESMF error will be raised.

arrayspec `ESMF_ArraySpec` object containing the type/kind/rank information.

[indexflag] Indicate how DE-local indices are defined. By default, the exclusive region of each DE is placed to start at the local index space origin, i.e. (1, 1, ..., 1). Alternatively the DE-local index space can be aligned with the global index space, if a global index space is well defined by the associated DistGrid. See section 55.29 for a list of valid indexflag options.

[pinflag] Specify which type of resource DEs are pinned to. See section 51.2.1 for a list of valid pinning options. The default is to pin DEs to PETs, i.e. only the PET on which a DE was created considers the DE as local.

[distgridToArrayMap] List that contains as many elements as is indicated by `distgrids`'s dimCount. The list elements map each dimension of the DistGrid object to a dimension in the newly allocated Array object by specifying the appropriate Array dimension index. The default is to map all of `distgrid`'s dimensions against the lower dimensions of the Array object in sequence, i.e. `distgridToArrayMap = (/1, 2, .../)`. Unmapped dimensions in the Array object are not decomposed dimensions and form a tensor of rank = Array.rank - DistGrid.dimCount. All `distgridToArrayMap` entries must be greater than or equal to zero and smaller than or equal to the Array rank. It is erroneous to specify the same entry multiple times unless it is zero. If the Array rank is less than the DistGrid dimCount then the default distgridToArrayMap will contain zeros for the dimCount - rank rightmost entries. A zero entry in the `distgridToArrayMap` indicates that the particular DistGrid dimension will be replicating the Array across the DEs along this direction.

[computationalEdgeLWidth] This vector argument must have dimCount elements, where dimCount is specified in distgrid. It specifies the lower corner of the computational region with respect to the lower corner of the exclusive region for DEs that are located on the edge of a tile.

[computationalEdgeUWidth] This vector argument must have dimCount elements, where dimCount is specified in distgrid. It specifies the upper corner of the computational region with respect to the upper corner of the exclusive region for DEs that are located on the edge of a tile.

[computationalLWidth] This vector argument must have dimCount elements, where dimCount is specified in distgrid. It specifies the lower corner of the computational region with respect to the lower corner of the exclusive region. The default is a zero vector.

[computationalUWidth] This vector argument must have dimCount elements, where dimCount is specified in distgrid. It specifies the upper corner of the computational region with respect to the upper corner of the exclusive region. The default is a zero vector.

[totalLWidth] This vector argument must have dimCount elements, where dimCount is specified in distgrid. It specifies the lower corner of the total memory region with respect to the lower corner of the exclusive region. The default is to accommodate the union of exclusive and computational region.

[totalUWidth] This vector argument must have dimCount elements, where dimCount is specified in distgrid. It specifies the upper corner of the total memory region with respect to the upper corner of the exclusive region. The default is to accommodate the union of exclusive and computational region.

[undistLBound] Lower bounds for the array dimensions that are not distributed.

[undistUBound] Upper bounds for the array dimensions that are not distributed.

[name] Name of the Array object.

[vm] If present, the Array object is created on the specified `ESMF_VM` object. The default is to create on the VM of the current context.

[rc] Return code; equals `ESMF_SUCCESS` if there are no errors.

29.5.14 ESMF_ArrayCreate - Create Array object from ArraySpec (allocate memory) w/ arbitrary seqIndices for halo

INTERFACE:

```
! Private name; call using ESMF_ArrayCreate()
function ESMF_ArrayCreateAllocateASArb<indexkind>(distgrid, arrayspec, &
haloSeqIndexList, pinflag, distgridToArrayMap, &
undistLBound, undistUBound, name, rc)
```

RETURN VALUE:

```
type(ESMF_Array) :: ESMF_ArrayCreateAllocateASArb
```

ARGUMENTS:

```
  type(ESMF_DistGrid), intent(in) :: distgrid
  type(ESMF_ArraySpec), intent(in) :: arrayspec
  integer(ESMF_KIND_<indexkind>), intent(in) :: haloSeqIndexList(:)
-- The following arguments require argument keyword syntax (e.g. rc=rc). --
  type(ESMF_Pin_Flag), intent(in), optional :: pinflag
  integer, intent(in), optional :: distgridToArrayMap(:)
  integer, intent(in), optional :: undistLBound(:)
  integer, intent(in), optional :: undistUBound(:)
  character (len=*), intent(in), optional :: name
  integer, intent(out), optional :: rc
```

STATUS:

- This interface is backward compatible with ESMF versions starting at 5.2.0r. If code using this interface compiles with any version of ESMF starting with 5.2.0r, then it will compile with the current version.
- This interface was modified since ESMF version 5.2.0r. The fact that code using this interface compiles with the current ESMF version does not guarantee that it compiles with previous versions of this interface. If user code compatibility with version 5.2.0r is desired then care must be taken to limit the use of this interface to features that were available in the 5.2.0r release.
  Changes made after the 5.2.0r release:

  8.0.0 Added argument `pinflag` to provide access to DE sharing between PETs.

DESCRIPTION:

Create an `ESMF_Array` object and allocate uninitialized data space according to arrayspec and distgrid. Each PET must issue this call in unison in order to create a consistent Array object. DE-local allocations are made according to the total region defined by the arguments to this call: `distgrid` and `haloSeqIndexList` arguments.

The return value is the newly created `ESMF_Array` object.

The arguments are:

distgrid `ESMF_DistGrid` object that describes how the array is decomposed and distributed over DEs. The dimCount of distgrid must be smaller or equal to the rank specified in arrayspec, otherwise a runtime ESMF error will be raised.

arrayspec `ESMF_ArraySpec` object containing the type/kind/rank information.

haloSeqIndexList One dimensional array containing sequence indices of local halo region. The size (and content) of `haloSeqIndexList` can (and typically will) be different on each PET. The `haloSeqIndexList` argument is of integer type, but can be of different kind in order to support both 32-bit (`ESMF_KIND_I4`) and 64-bit (`ESMF_KIND_I8`) indexing.

[pinflag] Specify which type of resource DEs are pinned to. See section 51.2.1 for a list of valid pinning options. The default is to pin DEs to PETs, i.e. only the PET on which a DE was created considers the DE as local.

[distgridToArrayMap] List that contains as many elements as is indicated by `distgrids`'s dimCount. The list elements map each dimension of the DistGrid object to a dimension in the newly allocated Array object by specifying the appropriate Array dimension index. The default is to map all of `distgrid`'s dimensions against the lower dimensions of the Array object in sequence, i.e. `distgridToArrayMap = (/1, 2, .../)`. Unmapped dimensions in the Array object are not decomposed dimensions and form a tensor of rank = Array.rank - DistGrid.dimCount. All `distgridToArrayMap` entries must be greater than or equal to zero and smaller than or equal to the Array rank. It is erroneous to specify the same entry multiple times unless it is zero. If the Array rank is less than the DistGrid dimCount then the default distgridToArrayMap will contain zeros for the dimCount - rank rightmost entries. A zero entry in the `distgridToArrayMap` indicates that the particular DistGrid dimension will be replicating the Array across the DEs along this direction.

[undistLBound] Lower bounds for the array dimensions that are not distributed.

[undistUBound] Upper bounds for the array dimensions that are not distributed.

[name] Name of the Array object.

[rc] Return code; equals `ESMF_SUCCESS` if there are no errors.

29.5.15 ESMF_ArrayCreate - Create Array object from an existing Array object

INTERFACE:

```
! Private name; call using ESMF_ArrayCreate()
function ESMF_ArrayCreateFromArray(array, datacopyflag, delayout, &
  trailingUndistSlice, name, rc)
```

RETURN VALUE:

```
type(ESMF_Array) :: ESMF_ArrayCreateFromArray
```

ARGUMENTS:

```
        type(ESMF_Array), intent(in) :: array
 -- The following arguments require argument keyword syntax (e.g. rc=rc). --
        type(ESMF_DataCopy_Flag), intent(in), optional :: datacopyflag
        type(ESMF_DELayout), intent(in), optional :: delayout
        integer, intent(in), optional :: trailingUndistSlice(:)
        character (len=*), intent(in), optional :: name
        integer, intent(out), optional :: rc
```

STATUS:

- This interface is backward compatible with ESMF versions starting at 5.2.0r. If code using this interface compiles with any version of ESMF starting with 5.2.0r, then it will compile with the current version.
- This interface was modified since ESMF version 5.2.0r. The fact that code using this interface compiles with the current ESMF version does not guarantee that it compiles with previous versions of this interface. If user code compatibility with version 5.2.0r is desired then care must be taken to limit the use of this interface to features that were available in the 5.2.0r release.
  Changes made after the 5.2.0r release:

  8.1.0 Added argument `datacopyflag` to select between different data copy options.
  Added argument `delayout` to create Array with different localDe -> DE mapping. This is identical to a change in DE -> PET mapping.

  8.6.0 Added argument `trailingUndistSlice` to allow slicing of arrays.
  Added argument `name` to allow specification during creation.

DESCRIPTION:

Create an `ESMF_Array` object from an existing Array. Supports array slicing.

The return value is the newly created `ESMF_Array` object.

The arguments are:

array `ESMF_Array` object to be used as originator.

[datacopyflag] Specifies whether the created Array object references the memory allocation provided by `array` directly or copies the data from `array` into a new memory allocation. For valid values see 55.13. The default is `ESMF_DATACOPY_VALUE`.

[delayout] If present, override the DELayout of the incoming `distgrid`. By default use the DELayout defined in `distgrid`.

[trailingUndistSlice] If present, the returned Array refers to a slice of `array` created by removing some or all of the trailing (i.e. rightmost) undistributed dimensions from the incoming Array object. The number of trailing dimensions removed is equal to the size n of `trailingUndistSlice`, which must be less than or equal to the total number of trailing undistributed dimensions in `array`. The `trailingUndistSlice` argument is interpreted as an index tuple for the n trailing undistributed dimensions in `array` in order, and the Array slice at that location is returned.

[name] Name of the Array object.

[rc] Return code; equals `ESMF_SUCCESS` if there are no errors.

29.5.16 ESMF_ArrayDestroy - Release resources associated with an Array object

INTERFACE:

```
subroutine ESMF_ArrayDestroy(array, noGarbage, rc)
```

ARGUMENTS:

```
     type(ESMF_Array), intent(inout) :: array
 -- The following arguments require argument keyword syntax (e.g. rc=rc). --
     logical, intent(in), optional :: noGarbage
     integer, intent(out), optional :: rc
```

STATUS:

- This interface is backward compatible with ESMF versions starting at 5.2.0r. If code using this interface compiles with any version of ESMF starting with 5.2.0r, then it will compile with the current version.
- This interface was modified since ESMF version 5.2.0r. The fact that code using this interface compiles with the current ESMF version does not guarantee that it compiles with previous versions of this interface. If user code compatibility with version 5.2.0r is desired then care must be taken to limit the use of this interface to features that were available in the 5.2.0r release.
  Changes made after the 5.2.0r release:

  7.0.0 Added argument `noGarbage`. The argument provides a mechanism to override the default garbage collection mechanism when destroying an ESMF object.

DESCRIPTION:

Destroy an `ESMF_Array`, releasing the resources associated with the object.

By default a small remnant of the object is kept in memory in order to prevent problems with dangling aliases. The default garbage collection mechanism can be overridden with the `noGarbage` argument.

The arguments are:

array `ESMF_Array` object to be destroyed.

[noGarbage] If set to `.TRUE.` the object will be fully destroyed and removed from the ESMF garbage collection system. Note however that under this condition ESMF cannot protect against accessing the destroyed object through dangling aliases – a situation which may lead to hard to debug application crashes.

It is generally recommended to leave the `noGarbage` argument set to `.FALSE.` (the default), and to take advantage of the ESMF garbage collection system which will prevent problems with dangling aliases or incorrect sequences of destroy calls. However this level of support requires that a small remnant of the object is kept in memory past the destroy call. This can lead to an unexpected increase in memory consumption over the course of execution in applications that use temporary ESMF objects. For situations where the repeated creation and destruction of temporary objects leads to memory issues, it is recommended to call with `noGarbage` set to `.TRUE.`, fully removing the entire temporary object from memory.

[rc] Return code; equals `ESMF_SUCCESS` if there are no errors.

29.5.17 ESMF_ArrayGather - Gather a Fortran array from an ESMF_Array

INTERFACE:

```
subroutine ESMF_ArrayGather(array, farray, rootPet, tile, vm, rc)
```

ARGUMENTS:

```
  type(ESMF_Array), intent(in) :: array
  <type>(ESMF_KIND_<kind>), intent(out), target :: farray(<rank>)
  integer, intent(in) :: rootPet
-- The following arguments require argument keyword syntax (e.g. rc=rc). --
  integer, intent(in), optional :: tile
  type(ESMF_VM), intent(in), optional :: vm
  integer, intent(out), optional :: rc
```

STATUS:

- This interface is backward compatible with ESMF versions starting at 5.2.0r. If code using this interface compiles with any version of ESMF starting with 5.2.0r, then it will compile with the current version.

DESCRIPTION:

Gather the data of an ESMF_Array object into the `farray` located on `rootPET`. A single DistGrid tile of `array` must be gathered into `farray`. The optional `tile` argument allows selection of the tile. For Arrays defined on a single tile DistGrid the default selection (tile 1) will be correct. The shape of `farray` must match the shape of the tile in Array.

If the Array contains replicating DistGrid dimensions data will be gathered from the numerically higher DEs. Replicated data elements in numerically lower DEs will be ignored.

This version of the interface implements the PET-based blocking paradigm: Each PET of the VM must issue this call exactly once for *all* of its DEs. The call will block until all PET-local data objects are accessible.

The arguments are:

array The `ESMF_Array` object from which data will be gathered.

{farray} The Fortran array into which to gather data. Only root must provide a valid `farray`, the other PETs may treat `farray` as an optional argument.

rootPet PET that holds the valid destination array, i.e. `farray`.

[tile] The DistGrid tile in `array` from which to gather `farray`. By default `farray` will be gathered from tile 1.

[vm] Optional `ESMF_VM` object of the current context. Providing the VM of the current context will lower the method's overhead.

[rc] Return code; equals `ESMF_SUCCESS` if there are no errors.

29.5.18 ESMF_ArrayGet - Get object-wide Array information

INTERFACE:

```
   ! Private name; call using ESMF_ArrayGet()
 subroutine ESMF_ArrayGetDefault(array, arrayspec, typekind, &
     rank, localarrayList, indexflag, distgridToArrayMap, &
     distgridToPackedArrayMap, arrayToDistGridMap, undistLBound, &
     undistUBound, exclusiveLBound, exclusiveUBound, computationalLBound, &
     computationalUBound, totalLBound, totalUBound, computationalLWidth, &
     computationalUWidth, totalLWidth, totalUWidth, distgrid, &
     dimCount, undistDimCount, replicatedDimCount, &
     tileCount, minIndexPTile, maxIndexPTile, deToTileMap, indexCountPDe, &
     delayout, deCount, localDeCount, ssiLocalDeCount, localDeToDeMap, &
     localDeList, & ! DEPRECATED ARGUMENT
     isESMFAllocated, name, vm, rc)
```

ARGUMENTS:

```
     type(ESMF_Array), intent(in) :: array
 -- The following arguments require argument keyword syntax (e.g. rc=rc). --
     type(ESMF_ArraySpec), intent(out), optional :: arrayspec
     type(ESMF_TypeKind_Flag), intent(out), optional :: typekind
     integer, intent(out), optional :: rank
     type(ESMF_LocalArray), target, intent(out), optional :: localarrayList(:)
     type(ESMF_Index_Flag), intent(out), optional :: indexflag
     integer, target, intent(out), optional :: distgridToArrayMap(:)
     integer, target, intent(out), optional :: distgridToPackedArrayMap(:)
     integer, target, intent(out), optional :: arrayToDistGridMap(:)
     integer, target, intent(out), optional :: undistLBound(:)
     integer, target, intent(out), optional :: undistUBound(:)
     integer, target, intent(out), optional :: exclusiveLBound(:,:)
     integer, target, intent(out), optional :: exclusiveUBound(:,:)
     integer, target, intent(out), optional :: computationalLBound(:,:)
     integer, target, intent(out), optional :: computationalUBound(:,:)
     integer, target, intent(out), optional :: totalLBound(:,:)
     integer, target, intent(out), optional :: totalUBound(:,:)
     integer, target, intent(out), optional :: computationalLWidth(:,:)
     integer, target, intent(out), optional :: computationalUWidth(:,:)
     integer, target, intent(out), optional :: totalLWidth(:,:)
     integer, target, intent(out), optional :: totalUWidth(:,:)
     type(ESMF_DistGrid), intent(out), optional :: distgrid
     integer, intent(out), optional :: dimCount
     integer, intent(out), optional :: undistDimCount
     integer, intent(out), optional :: replicatedDimCount
     integer, intent(out), optional :: tileCount
     integer, intent(out), optional :: minIndexPTile(:,:)
     integer, intent(out), optional :: maxIndexPTile(:,:)
     integer, intent(out), optional :: deToTileMap(:)
     integer, intent(out), optional :: indexCountPDe(:,:)
     type(ESMF_DELayout), intent(out), optional :: delayout
     integer, intent(out), optional :: deCount
     integer, intent(out), optional :: localDeCount
     integer, intent(out), optional :: ssiLocalDeCount
```

```
integer, intent(out), optional :: localDeToDeMap(:)
integer, intent(out), optional :: localDeList(:) ! DEPRECATED ARGUMENT
logical, intent(out), optional :: isESMFAllocated
character(len=*), intent(out), optional :: name
type(ESMF_VM), intent(out), optional :: vm
integer, intent(out), optional :: rc
```

STATUS:

- This interface is backward compatible with ESMF versions starting at 5.2.0r. If code using this interface compiles with any version of ESMF starting with 5.2.0r, then it will compile with the current version.
- This interface was modified since ESMF version 5.2.0r. The fact that code using this interface compiles with the current ESMF version does not guarantee that it compiles with previous versions of this interface. If user code compatibility with version 5.2.0r is desired then care must be taken to limit the use of this interface to features that were available in the 5.2.0r release.
  Changes made after the 5.2.0r release:

  5.2.0rp1 Added argument `localDeToDeMap`. Started to deprecate argument `localDeList`. The new argument name correctly uses the `Map` suffix and better describes the returned information. This was pointed out by user request.

  8.0.0 Added argument `ssiLocalDeCount` to support DE sharing between PETs on the same single system image (SSI).
  Added argument `vm` in order to offer information about the VM on which the Array was created.

  8.5.0 Added argument `isESMFAllocated` to support user query of whether ESMF or user is responsible for the data allocation referenced by this object.

  8.6.0 Added argument `undistDimCount` to support direct user query of the number of undistributed dimensions in the Array object.
  Added argument `replicatedDimCount` to support direct user query of the number of replicated dimensions in the Array object.

DESCRIPTION:

Get internal information.

This interface works for any number of DEs per PET.

The arguments are:

array Queried `ESMF_Array` object.

[arrayspec] `ESMF_ArraySpec` object containing the type/kind/rank information of the Array object.

[typekind] TypeKind of the Array object.

[rank] Rank of the Array object.

[localarrayList] Upon return this holds a list of the associated `ESMC_LocalArray` objects. `localarrayList` must be allocated to be of size `localDeCount` or `ssiLocalDeCount`.

[indexflag] Upon return this flag indicates how the DE-local indices are defined. See section 55.29 for a list of possible return values.

[distgridToArrayMap] Upon return this list holds the Array dimensions against which the DistGrid dimensions are mapped. `distgridToArrayMap` must be allocated to be of size `dimCount`. An entry of zero indicates that the respective DistGrid dimension is replicating the Array across the DEs along this direction.

[distgridToPackedArrayMap] Upon return this list holds the indices of the Array dimensions in packed format against which the DistGrid dimensions are mapped. `distgridToPackedArrayMap` must be allocated to be of size `dimCount`. An entry of zero indicates that the respective DistGrid dimension is replicating the Array across the DEs along this direction.

[arrayToDistGridMap] Upon return this list holds the DistGrid dimensions against which the Array dimensions are mapped. `arrayToDistGridMap` must be allocated to be of size `rank`. An entry of zero indicates that the respective Array dimension is not decomposed, rendering it a tensor dimension.

[undistLBound] Upon return this array holds the lower bounds of the undistributed dimensions of the Array. `UndistLBound` must be allocated to be of size `rank-dimCount`.

[undistUBound] Upon return this array holds the upper bounds of the undistributed dimensions of the Array. `UndistUBound` must be allocated to be of size `rank-dimCount`.

[exclusiveLBound] Upon return this holds the lower bounds of the exclusive regions for all PET-local DEs. `exclusiveLBound` must be allocated to be of size `(dimCount, localDeCount)` or `(dimCount, ssiLocalDeCount)`.

[exclusiveUBound] Upon return this holds the upper bounds of the exclusive regions for all PET-local DEs. `exclusiveUBound` must be allocated to be of size `(dimCount, localDeCount)` or `(dimCount, ssiLocalDeCount)`.

[computationalLBound] Upon return this holds the lower bounds of the computational regions for all PET-local DEs. `computationalLBound` must be allocated to be of size `(dimCount, localDeCount)` or `(dimCount, ssiLocalDeCount)`.

[computationalUBound] Upon return this holds the upper bounds of the computational regions for all PET-local DEs. `computationalUBound` must be allocated to be of size `(dimCount, localDeCount)` or `(dimCount, ssiLocalDeCount)`.

[totalLBound] Upon return this holds the lower bounds of the total regions for all PET-local DEs. `totalLBound` must be allocated to be of size `(dimCount, localDeCount)` or `(dimCount, ssiLocalDeCount)`.

[totalUBound] Upon return this holds the upper bounds of the total regions for all PET-local DEs. `totalUBound` must be allocated to be of size `(dimCount, localDeCount)` or `(dimCount, ssiLocalDeCount)`.

[computationalLWidth] Upon return this holds the lower width of the computational regions for all PET-local DEs. `computationalLWidth` must be allocated to be of size `(dimCount, localDeCount)` or `(dimCount, ssiLocalDeCount)`.

[computationalUWidth] Upon return this holds the upper width of the computational regions for all PET-local DEs. `computationalUWidth` must be allocated to be of size `(dimCount, localDeCount)` or `(dimCount, ssiLocalDeCount)`.

[totalLWidth] Upon return this holds the lower width of the total memory regions for all PET-local DEs. `totalLWidth` must be allocated to be of size `(dimCount, localDeCount)` or `(dimCount, ssiLocalDeCount)`.

[totalUWidth] Upon return this holds the upper width of the total memory regions for all PET-local DEs. `totalUWidth` must be allocated to be of size `(dimCount, localDeCount)` or `(dimCount, ssiLocalDeCount)`.

[distgrid] Upon return this holds the associated `ESMF_DistGrid` object.

[dimCount] Number of dimensions (rank) of `distgrid`.

[undistDimCount] Number of undistributed dimensions in the Array. (See Section 29.2.11 for an explanation of undistributed Array dimensions.)

[replicatedDimCount] Number of replicated dimensions in the Array. (See Section 29.2.12 for an explanation of replicated Array dimensions.)

[tileCount] Number of tiles in `distgrid`.

[minIndexPTile] Lower index space corner per `dim`, per `tile`, with `size(minIndexPTile) == (/dimCount, tileCount/)`.

[maxIndexPTile] Upper index space corner per `dim`, per `tile`, with `size(maxIndexPTile) == (/dimCount, tileCount/)`.

[deToTileMap] List of tile id numbers, one for each DE, with `size(deToTileMap) == (/deCount/)`

[indexCountPDe] Array of extents per `dim`, per `de`, with `size(indexCountPDe) == (/dimCount, deCount/)`.

[delayout] The associated `ESMF_DELayout` object.

[deCount] The total number of DEs in the Array.

[localDeCount] The number of DEs in the Array associated with the local PET.

[ssiLocalDeCount] The number of DEs in the Array available to the local PET. This includes DEs that are local to other PETs on the same SSI, that are accessible via shared memory.

[localDeToDeMap] Mapping between localDe indices and the (global) DEs associated with the local PET. The localDe index variables are discussed in sections 51.3.7 and 29.2.5. The provided actual argument must be of size `localDeCount`, or `ssiLocalDeCount`, and will be filled accordingly.

[localDeList] **DEPRECATED ARGUMENT!** Please use the argument `localDeToDeMap` instead.

[isESMFAllocated] Set to `.true.` for data allocations held by ESMF. Set to `.false.` otherwise.

[name] Name of the Array object.

[vm The VM on which the Array object was created.

[rc] Return code; equals `ESMF_SUCCESS` if there are no errors.

29.5.19 ESMF_ArrayGet - Get DE-local Array information for a specific dimension

INTERFACE:

```
! Private name; call using ESMF_ArrayGet()
subroutine ESMF_ArrayGetPLocalDePDim(array, dim, localDe, &
  indexCount, indexList, rc)
```

ARGUMENTS:

```
  type(ESMF_Array), intent(in) :: array
  integer, intent(in) :: dim
-- The following arguments require argument keyword syntax (e.g. rc=rc). --
  integer, intent(in), optional :: localDe
  integer, intent(out), optional :: indexCount
  integer, intent(out), optional :: indexList(:)
  integer, intent(out), optional :: rc
```

STATUS:

- This interface is backward compatible with ESMF versions starting at 5.2.0r. If code using this interface compiles with any version of ESMF starting with 5.2.0r, then it will compile with the current version.

DESCRIPTION:

Get internal information per local DE, per dim.

This interface works for any number of DEs per PET.

The arguments are:

array Queried `ESMF_Array` object.

dim Dimension for which information is requested. `[1,..,dimCount]`

[localDe] Local DE for which information is requested. `[0,..,localDeCount-1]`. For `localDeCount==1` the `localDe` argument may be omitted, in which case it will default to `localDe=0`.

[indexCount] DistGrid indexCount associated with `localDe, dim`.

[indexList] List of DistGrid tile-local indices for `localDe` along dimension `dim`.

[rc] Return code; equals `ESMF_SUCCESS` if there are no errors.

29.5.20 ESMF_ArrayGet - Get a DE-local Fortran array pointer from an Array

INTERFACE:

```
! Private name; call using ESMF_ArrayGet()
subroutine ESMF_ArrayGetFPtr<rank><type><kind>(array, localDe, &
farrayPtr, rc)
```

ARGUMENTS:

```
  type(ESMF_Array), intent(in) :: array
-- The following arguments require argument keyword syntax (e.g. rc=rc). --
  integer, intent(in), optional :: localDe
  <type> (ESMF_KIND_<kind>), pointer :: farrayPtr(<rank>)
  integer, intent(out), optional :: rc
```

STATUS:

- This interface is backward compatible with ESMF versions starting at 5.2.0r. If code using this interface compiles with any version of ESMF starting with 5.2.0r, then it will compile with the current version.

DESCRIPTION:

Access Fortran array pointer to the specified DE-local memory allocation of the Array object.

The arguments are:

array Queried `ESMF_Array` object.

[localDe] Local DE for which information is requested. `[0,..,localDeCount-1]`. For `localDeCount==1` the `localDe` argument may be omitted, in which case it will default to `localDe=0`.

farrayPtr Upon return, `farrayPtr` points to the DE-local data allocation of `localDe` in `array`. It depends on the specific entry point of `ESMF_ArrayCreate()` used during `array` creation, which Fortran operations are supported on the returned `farrayPtr`. See 29.3 for more details.

[rc] Return code; equals `ESMF_SUCCESS` if there are no errors.

29.5.21 ESMF_ArrayGet - Get a DE-local LocalArray object from an Array

INTERFACE:

```
! Private name; call using ESMF_ArrayGet()
subroutine ESMF_ArrayGetLocalArray(array, localDe, localarray, rc)
```

ARGUMENTS:

```
     type(ESMF_Array), intent(in) :: array
 -- The following arguments require argument keyword syntax (e.g. rc=rc). --
     integer, intent(in), optional :: localDe
     type(ESMF_LocalArray), intent(inout) :: localarray
     integer, intent(out), optional :: rc
```

STATUS:

- This interface is backward compatible with ESMF versions starting at 5.2.0r. If code using this interface compiles with any version of ESMF starting with 5.2.0r, then it will compile with the current version.

DESCRIPTION:

Provide access to `ESMF_LocalArray` object that holds data for the specified local DE.

The arguments are:

array Queried `ESMF_Array` object.

[localDe] Local DE for which information is requested. `[0,..,localDeCount-1]`. For `localDeCount==1` the `localDe` argument may be omitted, in which case it will default to `localDe=0`.

localarray Upon return `localarray` refers to the DE-local data allocation of `array`.

[rc] Return code; equals `ESMF_SUCCESS` if there are no errors.

29.5.22 ESMF_ArrayHalo - Execute an Array halo operation

INTERFACE:

```
subroutine ESMF_ArrayHalo(array, routehandle, &
  routesyncflag, finishedflag, cancelledflag, checkflag, rc)
```

ARGUMENTS:

```
    type(ESMF_Array),          intent(inout)         :: array
    type(ESMF_RouteHandle),    intent(inout)         :: routehandle
-- The following arguments require argument keyword syntax (e.g. rc=rc). --
    type(ESMF_RouteSync_Flag), intent(in),  optional :: routesyncflag
    logical,                   intent(out), optional :: finishedflag
    logical,                   intent(out), optional :: cancelledflag
    logical,                   intent(in),  optional :: checkflag
    integer,                   intent(out), optional :: rc
```

STATUS:

- This interface is backward compatible with ESMF versions starting at 5.2.0r. If code using this interface compiles with any version of ESMF starting with 5.2.0r, then it will compile with the current version.

DESCRIPTION:

Execute a precomputed Array halo operation for `array`. The `array` argument must match the respective Array used during `ESMF_ArrayHaloStore()` in *type*, *kind*, and memory layout of the *distributed* dimensions. However, the size, number, and index order of *undistributed* dimensions may be different. See section 38.2.5 for a more detailed discussion of RouteHandle reusability.

See `ESMF_ArrayHaloStore()` on how to precompute `routehandle`.

This call is *collective* across the current VM.

array `ESMF_Array` containing data to be haloed.

routehandle Handle to the precomputed Route.

[routesyncflag] Indicate communication option. Default is `ESMF_ROUTESYNC_BLOCKING`, resulting in a blocking operation. See section 55.53 for a complete list of valid settings.

[finishedflag] Used in combination with `routesyncflag = ESMF_ROUTESYNC_NBTESTFINISH`. Returned `finishedflag` equal to `.true.` indicates that all operations have finished. A value of `.false.` indicates that there are still unfinished operations that require additional calls with `routesyncflag = ESMF_ROUTESYNC_NBTESTFINISH`, or a final call with `routesyncflag = ESMF_ROUTESYNC_NBWAITFINISH`. For all other `routesyncflag` settings the returned value in `finishedflag` is always `.true.`.

[cancelledflag] A value of `.true.` indicates that were cancelled communication operations. In this case the data in the `dstArray` must be considered invalid. It may have been partially modified by the call. A value of `.false.` indicates that none of the communication operations was cancelled. The data in `dstArray` is valid if `finishedflag` returns equal `.true.`.

[checkflag] If set to `.TRUE.` the input Array pair will be checked for consistency with the precomputed operation provided by `routehandle`. If set to `.FALSE.` *(default)* only a very basic input check will be performed, leaving many inconsistencies undetected. Set `checkflag` to `.FALSE.` to achieve highest performance.

[rc] Return code; equals `ESMF_SUCCESS` if there are no errors.

29.5.23 ESMF_ArrayHaloRelease - Release resources associated with Array halo operation

INTERFACE:

```
subroutine ESMF_ArrayHaloRelease(routehandle, noGarbage, rc)
```

ARGUMENTS:

```
     type(ESMF_RouteHandle), intent(inout)         :: routehandle
 -- The following arguments require argument keyword syntax (e.g. rc=rc). --
     logical,                intent(in),  optional :: noGarbage
     integer,                intent(out), optional :: rc
```

STATUS:

- This interface is backward compatible with ESMF versions starting at 5.2.0r. If code using this interface compiles with any version of ESMF starting with 5.2.0r, then it will compile with the current version.
- This interface was modified since ESMF version 5.2.0r. The fact that code using this interface compiles with the current ESMF version does not guarantee that it compiles with previous versions of this interface. If user code compatibility with version 5.2.0r is desired then care must be taken to limit the use of this interface to features that were available in the 5.2.0r release.
  Changes made after the 5.2.0r release:

  8.0.0 Added argument `noGarbage`. The argument provides a mechanism to override the default garbage collection mechanism when destroying an ESMF object.

DESCRIPTION:

Release resources associated with an Array halo operation. After this call `routehandle` becomes invalid.

routehandle Handle to the precomputed Route.

[noGarbage] If set to `.TRUE.` the object will be fully destroyed and removed from the ESMF garbage collection system. Note however that under this condition ESMF cannot protect against accessing the destroyed object through dangling aliases – a situation which may lead to hard to debug application crashes.

It is generally recommended to leave the `noGarbage` argument set to `.FALSE.` (the default), and to take advantage of the ESMF garbage collection system which will prevent problems with dangling aliases or incorrect sequences of destroy calls. However this level of support requires that a small remnant of the object is kept in memory past the destroy call. This can lead to an unexpected increase in memory consumption over the course of execution in applications that use temporary ESMF objects. For situations where the repeated creation and destruction of temporary objects leads to memory issues, it is recommended to call with `noGarbage` set to `.TRUE.`, fully removing the entire temporary object from memory.

[rc] Return code; equals `ESMF_SUCCESS` if there are no errors.

29.5.24 ESMF_ArrayHaloStore - Precompute an Array halo operation

INTERFACE:

```
subroutine ESMF_ArrayHaloStore(array, routehandle, &
  startregion, haloLDepth, haloUDepth, pipelineDepth, rc)
```

ARGUMENTS:

```
    type(ESMF_Array),            intent(inout)           :: array
    type(ESMF_RouteHandle),      intent(inout)           :: routehandle
-- The following arguments require argument keyword syntax (e.g. rc=rc). --
    type(ESMF_StartRegion_Flag), intent(in),    optional :: startregion
    integer,                     intent(in),    optional :: haloLDepth(:)
    integer,                     intent(in),    optional :: haloUDepth(:)
    integer,                     intent(inout), optional :: pipelineDepth
    integer,                     intent(out),   optional :: rc
```

STATUS:

- This interface is backward compatible with ESMF versions starting at 5.2.0r. If code using this interface compiles with any version of ESMF starting with 5.2.0r, then it will compile with the current version.
- This interface was modified since ESMF version 5.2.0r. The fact that code using this interface compiles with the current ESMF version does not guarantee that it compiles with previous versions of this interface. If user code compatibility with version 5.2.0r is desired then care must be taken to limit the use of this interface to features that were available in the 5.2.0r release.
  Changes made after the 5.2.0r release:

  6.1.0 Added argument `pipelineDepth`. The new argument provide access to the tuning parameter affecting the sparse matrix execution.

DESCRIPTION:

Store an Array halo operation over the data in `array`. By default, i.e. without specifying `startregion`, `haloLDepth` and `haloUDepth`, all elements in the total Array region that lie outside the exclusive region will be considered potential destination elements for halo. However, only those elements that have a corresponding halo source element, i.e. an exclusive element on one of the DEs, will be updated under the halo operation. Elements that have no associated source remain unchanged under halo.

Specifying `startregion` allows the shape of the effective halo region to be changed from the inside. Setting this flag to `ESMF_STARTREGION_COMPUTATIONAL` means that only elements outside the computational region of the Array are considered for potential destination elements for the halo operation. The default is `ESMF_STARTREGION_EXCLUSIVE`.

The `haloLDepth` and `haloUDepth` arguments allow to reduce the extent of the effective halo region. Starting at the region specified by `startregion`, the `haloLDepth` and `haloUDepth` define a halo depth in each direction. Note that the maximum halo region is limited by the total Array region, independent of the actual `haloLDepth` and `haloUDepth` setting. The total Array region is local DE specific. The `haloLDepth` and `haloUDepth` are interpreted as the maximum desired extent, reducing the potentially larger region available for the halo operation.

The routine returns an `ESMF_RouteHandle` that can be used to call `ESMF_ArrayHalo()` on any Array that matches `array` in *type*, *kind*, and memory layout of the *distributed* dimensions. However, the size, number, and index

order of *undistributed* dimensions may be different. See section 38.2.5 for a more detailed discussion of RouteHandle reusability.

This call is *collective* across the current VM.

array `ESMF_Array` containing data to be haloed. The data in the halo region may be destroyed by this call.

routehandle Handle to the precomputed Route.

[startregion] The start of the effective halo region on every DE. The default setting is `ESMF_STARTREGION_EXCLUSIVE`, rendering all non-exclusive elements potential halo destination elements. See section 55.56 for a complete list of valid settings.

[haloLDepth] This vector specifies the lower corner of the effective halo region with respect to the lower corner of `startregion`. The size of `haloLDepth` must equal the number of distributed Array dimensions.

[haloUDepth] This vector specifies the upper corner of the effective halo region with respect to the upper corner of `startregion`. The size of `haloUDepth` must equal the number of distributed Array dimensions.

[pipelineDepth] The `pipelineDepth` parameter controls how many messages a PET may have outstanding during a halo exchange. Larger values of `pipelineDepth` typically lead to better performance. However, on some systems too large a value may lead to performance degradation, or runtime errors.

Note that the pipeline depth has no effect on the bit-for-bit reproducibility of the results. However, it may affect the performance reproducibility of the exchange.

The `ESMF_ArraySMMStore()` method implements an auto-tuning scheme for the `pipelineDepth` parameter. The intent on the `pipelineDepth` argument is "`inout`" in order to support both overriding and accessing the auto-tuning parameter. If an argument $>= 0$ is specified, it is used for the `pipelineDepth` parameter, and the auto-tuning phase is skipped. In this case the `pipelineDepth` argument is not modified on return. If the provided argument is < 0, the `pipelineDepth` parameter is determined internally using the auto-tuning scheme. In this case the `pipelineDepth` argument is re-set to the internally determined value on return. Auto-tuning is also used if the optional `pipelineDepth` argument is omitted.

[rc] Return code; equals `ESMF_SUCCESS` if there are no errors.

29.5.25 ESMF_ArrayIsCreated - Check whether an Array object has been created

INTERFACE:

```
function ESMF_ArrayIsCreated(array, rc)
```

RETURN VALUE:

```
logical :: ESMF_ArrayIsCreated
```

ARGUMENTS:

```
     type(ESMF_Array), intent(in)            :: array
 -- The following arguments require argument keyword syntax (e.g. rc=rc). --
     integer,          intent(out), optional :: rc
```

DESCRIPTION:

Return `.true.` if the `array` has been created. Otherwise return `.false.`. If an error occurs, i.e. `rc /= ESMF_SUCCESS` is returned, the return value of the function will also be `.false.`.

The arguments are:

array `ESMF_Array` queried.

[rc] Return code; equals `ESMF_SUCCESS` if there are no errors.

29.5.26 ESMF_ArrayLog - Log Array information

INTERFACE:

```
subroutine ESMF_ArrayLog(array, prefix, logMsgFlag, deepFlag, rc)
```

ARGUMENTS:

```
     type(ESMF_Array),       intent(in)              :: array
 -- The following arguments require argument keyword syntax (e.g. rc=rc). --
     character(len=*),       intent(in),   optional  :: prefix
     type(ESMF_LogMsg_Flag), intent(in),   optional  :: logMsgFlag
     logical,                intent(in),   optional  :: deepFlag
     integer, intent(out),                 optional  :: rc
```

DESCRIPTION:

Write information about `array` to the ESMF default Log.

The arguments are:

array The `ESMF_Array` object logged.

[prefix] String to prefix the log message. Default is no prefix.

[logMsgFlag] Type of log message generated. See section 50.2.3 for a list of valid message types. Default is `ESMF_LOGMSG_INFO`.

[deepFlag] When set to `.false.` (default), only log top level information about the Array. When set to `.true.`, additionally log deep information.

[rc] Return code; equals `ESMF_SUCCESS` if there are no errors.

29.5.27 ESMF_ArrayPrint - Print Array information

INTERFACE:

```
subroutine ESMF_ArrayPrint(array, rc)
```

ARGUMENTS:

```
     type(ESMF_Array), intent(in)            :: array
 -- The following arguments require argument keyword syntax (e.g. rc=rc). --
     integer,          intent(out), optional :: rc
```

STATUS:

- This interface is backward compatible with ESMF versions starting at 5.2.0r. If code using this interface compiles with any version of ESMF starting with 5.2.0r, then it will compile with the current version.

DESCRIPTION:

Print internal information of the specified `ESMF_Array` object.

The arguments are:

array `ESMF_Array` object.

[rc] Return code; equals `ESMF_SUCCESS` if there are no errors.

29.5.28 ESMF_ArrayRead - Read Array data from a file

INTERFACE:

```
subroutine ESMF_ArrayRead(array, fileName, variableName, &
  timeslice, iofmt, rc)
```

ARGUMENTS:

```
     type(ESMF_Array),      intent(inout)         :: array
     character(*),          intent(in)            :: fileName
 -- The following arguments require argument keyword syntax (e.g. rc=rc). --
     character(*),          intent(in),  optional :: variableName
     integer,               intent(in),  optional :: timeslice
     type(ESMF_IOFmt_Flag), intent(in),  optional :: iofmt
     integer,               intent(out), optional :: rc
```

DESCRIPTION:

Read Array data from file and put it into an `ESMF_Array` object. For this API to be functional, the environment variable `ESMF_PIO` should be set to either "internal" or "external" when the ESMF library is built. Please see the section on Data I/O, 39.2.

The arguments are:

array The `ESMF_Array` object in which the read data is returned.

fileName The name of the file from which Array data is read. If this is a multi-tile Array, then fileName must contain exactly one instance of "*"; this is a placeholder that will be replaced by the tile number, with each tile being read from a separate file. (For example, for a fileName of "myfile*.nc", tile 1 will be read from "myfile1.nc", tile 2 from "myfile2.nc", etc.) (This handling of the fileName for multi-tile I/O is subject to change.)

[variableName] Variable name in the file; default is the "name" of Array. Use this argument only in the I/O format (such as NetCDF) that supports variable name. If the I/O format does not support this (such as binary format), ESMF will return an error code.

[timeslice] The time-slice number of the variable read from file.

[iofmt] The I/O format. Please see Section 55.30 for the list of options. If not present, defaults to `ESMF_IOFMT_NETCDF`.

[rc] Return code; equals `ESMF_SUCCESS` if there are no errors.

29.5.29 ESMF_ArrayRedist - Execute an Array redistribution

INTERFACE:

```
subroutine ESMF_ArrayRedist(srcArray, dstArray, routehandle, &
  routesyncflag, finishedflag, cancelledflag, zeroregion, checkflag, rc)
```

ARGUMENTS:

```
     type(ESMF_Array),           intent(in),    optional :: srcArray
     type(ESMF_Array),           intent(inout), optional :: dstArray
     type(ESMF_RouteHandle),     intent(inout)           :: routehandle
 -- The following arguments require argument keyword syntax (e.g. rc=rc). --
     type(ESMF_RouteSync_Flag), intent(in),    optional :: routesyncflag
     logical,                   intent(out),   optional :: finishedflag
     logical,                   intent(out),   optional :: cancelledflag
     type(ESMF_Region_Flag),    intent(in),    optional :: zeroregion
     logical,                   intent(in),    optional :: checkflag
     integer,                   intent(out),   optional :: rc
```

STATUS:

- This interface is backward compatible with ESMF versions starting at 5.2.0r. If code using this interface compiles with any version of ESMF starting with 5.2.0r, then it will compile with the current version.

- This interface was modified since ESMF version 5.2.0r. The fact that code using this interface compiles with the current ESMF version does not guarantee that it compiles with previous versions of this interface. If user code compatibility with version 5.2.0r is desired then care must be taken to limit the use of this interface to features that were available in the 5.2.0r release.
  Changes made after the 5.2.0r release:

  7.1.0r Added argument `zeroregion` to allow user to control how the destination array is zero'ed out. This is especially useful in cases where the source and destination arrays do not cover the identical index space.

DESCRIPTION:

Execute a precomputed Array redistribution from `srcArray` to `dstArray`. Both `srcArray` and `dstArray` must match the respective Arrays used during `ESMF_ArrayRedisttore()` in *type*, *kind*, and memory layout of the *distributed* dimensions. However, the size, number, and index order of *undistributed* dimensions may be different. See section 38.2.5 for a more detailed discussion of RouteHandle reusability.

The `srcArray` and `dstArray` arguments are optional in support of the situation where `srcArray` and/or `dstArray` are not defined on all PETs. The `srcArray` and `dstArray` must be specified on those PETs that hold source or destination DEs, respectively, but may be omitted on all other PETs. PETs that hold neither source nor destination DEs may omit both arguments.

It is erroneous to specify the identical Array object for `srcArray` and `dstArray` arguments.

See `ESMF_ArrayRedistStore()` on how to precompute `routehandle`.

This call is *collective* across the current VM.

[srcArray] `ESMF_Array` with source data.

[dstArray] `ESMF_Array` with destination data.

routehandle Handle to the precomputed Route.

[routesyncflag] Indicate communication option. Default is `ESMF_ROUTESYNC_BLOCKING`, resulting in a blocking operation. See section 55.53 for a complete list of valid settings.

[finishedflag] Used in combination with `routesyncflag = ESMF_ROUTESYNC_NBTESTFINISH`. Returned `finishedflag` equal to `.true.` indicates that all operations have finished. A value of `.false.` indicates that there are still unfinished operations that require additional calls with `routesyncflag = ESMF_ROUTESYNC_NBTESTFINISH`, or a final call with `routesyncflag = ESMF_ROUTESYNC_NBWAITFINISH`. For all other `routesyncflag` settings the returned value in `finishedflag` is always `.true.`.

[cancelledflag] A value of `.true.` indicates that were cancelled communication operations. In this case the data in the `dstArray` must be considered invalid. It may have been partially modified by the call. A value of `.false.` indicates that none of the communication operations was cancelled. The data in `dstArray` is valid if `finishedflag` returns equal `.true.`.

[zeroregion] If set to `ESMF_REGION_TOTAL` the total regions of all DEs in `dstArray` will be initialized to zero before updating the elements with the results of the sparse matrix multiplication. If set to `ESMF_REGION_EMPTY` the elements in `dstArray` will not be modified prior to the sparse matrix multiplication and results will be added to the incoming element values. Setting `zeroregion` to `ESMF_REGION_SELECT` will only zero out those elements in the destination Array that will be updated by the sparse matrix multiplication. See section 55.50 for a complete list of valid settings. The default is `ESMF_REGION_SELECT`.

[checkflag] If set to `.TRUE.` the input Array pair will be checked for consistency with the precomputed operation provided by `routehandle`. If set to `.FALSE.` *(default)* only a very basic input check will be performed, leaving many inconsistencies undetected. Set `checkflag` to `.FALSE.` to achieve highest performance.

[rc] Return code; equals `ESMF_SUCCESS` if there are no errors.

29.5.30 ESMF_ArrayRedistRelease - Release resources associated with Array redistribution

INTERFACE:

```
subroutine ESMF_ArrayRedistRelease(routehandle, noGarbage, rc)
```

ARGUMENTS:

```
     type(ESMF_RouteHandle), intent(inout)         :: routehandle
 -- The following arguments require argument keyword syntax (e.g. rc=rc). --
     logical,                intent(in),  optional :: noGarbage
     integer,                intent(out), optional :: rc
```

STATUS:

- This interface is backward compatible with ESMF versions starting at 5.2.0r. If code using this interface compiles with any version of ESMF starting with 5.2.0r, then it will compile with the current version.
- This interface was modified since ESMF version 5.2.0r. The fact that code using this interface compiles with the current ESMF version does not guarantee that it compiles with previous versions of this interface. If user code compatibility with version 5.2.0r is desired then care must be taken to limit the use of this interface to features that were available in the 5.2.0r release.
  Changes made after the 5.2.0r release:

  8.0.0 Added argument `noGarbage`. The argument provides a mechanism to override the default garbage collection mechanism when destroying an ESMF object.

DESCRIPTION:

Release resources associated with an Array redistribution. After this call `routehandle` becomes invalid.

routehandle Handle to the precomputed Route.

[noGarbage] If set to `.TRUE.` the object will be fully destroyed and removed from the ESMF garbage collection system. Note however that under this condition ESMF cannot protect against accessing the destroyed object through dangling aliases – a situation which may lead to hard to debug application crashes.

It is generally recommended to leave the `noGarbage` argument set to `.FALSE.` (the default), and to take advantage of the ESMF garbage collection system which will prevent problems with dangling aliases or incorrect sequences of destroy calls. However this level of support requires that a small remnant of the object is kept in memory past the destroy call. This can lead to an unexpected increase in memory consumption over the course of execution in applications that use temporary ESMF objects. For situations where the repeated creation and destruction of temporary objects leads to memory issues, it is recommended to call with `noGarbage` set to `.TRUE.`, fully removing the entire temporary object from memory.

[rc] Return code; equals `ESMF_SUCCESS` if there are no errors.

29.5.31 ESMF_ArrayRedistStore - Precompute Array redistribution with local factor argument

INTERFACE:

```
! Private name; call using ESMF_ArrayRedistStore()
subroutine ESMF_ArrayRedistStore<type><kind>(srcArray, dstArray, &
  routehandle, factor, srcToDstTransposeMap, &
  ignoreUnmatchedIndices, pipelineDepth, rc)
```

ARGUMENTS:

```
  type(ESMF_Array),       intent(in)              :: srcArray
  type(ESMF_Array),       intent(inout)           :: dstArray
  type(ESMF_RouteHandle), intent(inout)           :: routehandle
  <type>(ESMF_KIND_<kind>),intent(in)             :: factor
-- The following arguments require argument keyword syntax (e.g. rc=rc). --
  integer,                intent(in),    optional :: srcToDstTransposeMap(:)
  logical,                intent(in),    optional :: ignoreUnmatchedIndices
  integer,                intent(inout), optional :: pipelineDepth
  integer,                intent(out),   optional :: rc
```

STATUS:

- This interface is backward compatible with ESMF versions starting at 5.2.0r. If code using this interface compiles with any version of ESMF starting with 5.2.0r, then it will compile with the current version.
- This interface was modified since ESMF version 5.2.0r. The fact that code using this interface compiles with the current ESMF version does not guarantee that it compiles with previous versions of this interface. If user code compatibility with version 5.2.0r is desired then care must be taken to limit the use of this interface to features that were available in the 5.2.0r release.
  Changes made after the 5.2.0r release:

  6.1.0 Added argument `pipelineDepth`. The new argument provide access to the tuning parameter affecting the sparse matrix execution.

  7.0.0 Added argument `transposeRoutehandle` to allow a handle to the transposed redist operation to be returned.
  Added argument `ignoreUnmatchedIndices` to support situations where not all elements between source and destination Arrays match.

  7.1.0r Removed argument `transposeRoutehandle` and provide it via interface overloading instead. This allows argument `srcArray` to stay strictly intent(in) for this entry point.

DESCRIPTION:

`ESMF_ArrayRedistStore()` is a collective method across all PETs of the current Component. The interface of the method is overloaded, allowing – in principle – each PET to call into `ESMF_ArrayRedistStore()` through a different entry point. Restrictions apply as to which combinations are sensible. All other combinations result in ESMF run time errors. The complete semantics of the `ESMF_ArrayRedistStore()` method, as provided through the separate entry points shown in 29.5.31 and 29.5.33, is described in the following paragraphs as a whole.

Store an Array redistribution operation from `srcArray` to `dstArray`. Interface 29.5.31 allows PETs to specify a `factor` argument. PETs not specifying a `factor` argument call into interface 29.5.33. If multiple PETs specify the `factor` argument, its type and kind, as well as its value must match across all PETs. If none of the PETs specify

a `factor` argument the default will be a factor of 1. The resulting factor is applied to all of the source data during redistribution, allowing scaling of the data, e.g. for unit transformation.

Both `srcArray` and `dstArray` are interpreted as sequentialized vectors. The sequence is defined by the order of DistGrid dimensions and the order of tiles within the DistGrid or by user-supplied arbitrary sequence indices. See section 29.2.18 for details on the definition of *sequence indices*.

Source Array, destination Array, and the factor may be of different <type><kind>. Further, source and destination Arrays may differ in shape, however, the number of elements must match.

The default redistribution operation, when `srcToDstTransposeMap` is not specified, corresponds to the identity mapping: each element of the sequentialized source Array is copied to the sequentialized destination Array element in order.

If the `srcToDstTransposeMap` argument is provided it must be identical across all PETs. The `srcToDstTransposeMap` allows source and destination Array dimensions to be transposed during the redistribution. To support this option, the number of source and destination Array dimensions must be equal and the size of the associated dimensions must match. See section 29.2.17 for more details about the use of the `srcToDstTransposeMap` argument.

It is erroneous to specify the identical Array object for `srcArray` and `dstArray` arguments.

The routine returns an `ESMF_RouteHandle` that can be used to call `ESMF_ArrayRedist()` on any pair of Arrays that matches `srcArray` and `dstArray` in *type*, *kind*, and memory layout of the *distributed* dimensions. However, the size, number, and index order of *undistributed* dimensions may be different. See section 38.2.5 for a more detailed discussion of RouteHandle reusability.

This method is overloaded for:
`ESMF_TYPEKIND_I4`, `ESMF_TYPEKIND_I8`,
`ESMF_TYPEKIND_R4`, `ESMF_TYPEKIND_R8`.

This call is *collective* across the current VM.

srcArray `ESMF_Array` with source data.

dstArray `ESMF_Array` with destination data. The data in this Array may be destroyed by this call.

routehandle Handle to the precomputed Route.

factor Factor by which to multiply source data.

[srcToDstTransposeMap] A list with as many entries as there are dimensions in `srcArray`, or `tileCount` times this many entries. Each entry maps the corresponding `srcArray` dimension against the specified `dstArray` dimension. Mixing distributed and undistributed dimensions is supported. Negative entries reverse the order of elements along the specified dimension when going from source to destination. When providing $rank \times tileCount$ elements in `srcToDstTransposeMap`, each block of size `rank` is associated with the corresponding tile (in order), and interpreted as the tile-specific transpose map.

[ignoreUnmatchedIndices] A logical flag that affects the behavior for when not all elements match between the `srcArray` and `dstArray` side. The default setting is `.false.`, indicating that it is an error when such a situation is encountered. Setting `ignoreUnmatchedIndices` to `.true.` ignores unmatched indices.

[pipelineDepth] The `pipelineDepth` parameter controls how many messages a PET may have outstanding during a redist exchange. Larger values of `pipelineDepth` typically lead to better performance. However, on some systems too large a value may lead to performance degradation, or runtime errors.

Note that the pipeline depth has no effect on the bit-for-bit reproducibility of the results. However, it may affect the performance reproducibility of the exchange.

The `ESMF_ArraySMMStore()` method implements an auto-tuning scheme for the `pipelineDepth` parameter. The intent on the `pipelineDepth` argument is `"inout"` in order to support both overriding and

accessing the auto-tuning parameter. If an argument $>= 0$ is specified, it is used for the `pipelineDepth` parameter, and the auto-tuning phase is skipped. In this case the `pipelineDepth` argument is not modified on return. If the provided argument is < 0, the `pipelineDepth` parameter is determined internally using the auto-tuning scheme. In this case the `pipelineDepth` argument is re-set to the internally determined value on return. Auto-tuning is also used if the optional `pipelineDepth` argument is omitted.

[rc] Return code; equals `ESMF_SUCCESS` if there are no errors.

29.5.32 ESMF_ArrayRedistStore - Precompute Array redistribution and transpose with local factor argument

INTERFACE:

```
! Private name; call using ESMF_ArrayRedistStore()
subroutine ESMF_ArrayRedistStore<type><kind>TP(srcArray, dstArray, &
  routehandle, transposeRoutehandle, factor, &
  srcToDstTransposeMap, ignoreUnmatchedIndices, pipelineDepth, rc)
```

ARGUMENTS:

```
  type(ESMF_Array),       intent(inout)           :: srcArray
  type(ESMF_Array),       intent(inout)           :: dstArray
  type(ESMF_RouteHandle), intent(inout)           :: routehandle
  type(ESMF_RouteHandle), intent(inout)           :: transposeRoutehandle
  <type>(ESMF_KIND_<kind>),intent(in)             :: factor
-- The following arguments require argument keyword syntax (e.g. rc=rc). --
  integer,                intent(in),    optional :: srcToDstTransposeMap(:)
  logical,                intent(in),    optional :: ignoreUnmatchedIndices
  integer,                intent(inout), optional :: pipelineDepth
  integer,                intent(out),   optional :: rc
```

DESCRIPTION:

`ESMF_ArrayRedistStore()` is a collective method across all PETs of the current Component. The interface of the method is overloaded, allowing – in principle – each PET to call into `ESMF_ArrayRedistStore()` through a different entry point. Restrictions apply as to which combinations are sensible. All other combinations result in ESMF run time errors. The complete semantics of the `ESMF_ArrayRedistStore()` method, as provided through the separate entry points shown in 29.5.32 and 29.5.34, is described in the following paragraphs as a whole.

Store an Array redistribution operation from `srcArray` to `dstArray`. Interface 29.5.32 allows PETs to specify a `factor` argument. PETs not specifying a `factor` argument call into interface 29.5.34. If multiple PETs specify the `factor` argument, its type and kind, as well as its value must match across all PETs. If none of the PETs specify a `factor` argument the default will be a factor of 1. The resulting factor is applied to all of the source data during redistribution, allowing scaling of the data, e.g. for unit transformation.

Both `srcArray` and `dstArray` are interpreted as sequentialized vectors. The sequence is defined by the order of DistGrid dimensions and the order of tiles within the DistGrid or by user-supplied arbitrary sequence indices. See section 29.2.18 for details on the definition of *sequence indices*.

Source Array, destination Array, and the factor may be of different <type><kind>. Further, source and destination Arrays may differ in shape, however, the number of elements must match.

The default redistribution operation, when srcToDstTransposeMap is not specified, corresponds to the identity mapping: each element of the sequentialized source Array is copied to the sequentialized destination Array element in order.

If the srcToDstTransposeMap argument is provided it must be identical across all PETs. The srcToDstTransposeMap allows source and destination Array dimensions to be transposed during the redistribution. To support this option, the number of source and destination Array dimensions must be equal and the size of the associated dimensions must match. See section 29.2.17 for more details about the use of the srcToDstTransposeMap argument.

It is erroneous to specify the identical Array object for srcArray and dstArray arguments.

The routine returns an ESMF_RouteHandle that can be used to call ESMF_ArrayRedist() on any pair of Arrays that matches srcArray and dstArray in *type*, *kind*, and memory layout of the *distributed* dimensions. However, the size, number, and index order of *undistributed* dimensions may be different. See section 38.2.5 for a more detailed discussion of RouteHandle reusability.

This method is overloaded for:
ESMF_TYPEKIND_I4, ESMF_TYPEKIND_I8,
ESMF_TYPEKIND_R4, ESMF_TYPEKIND_R8.

This call is *collective* across the current VM.

srcArray ESMF_Array with source data. The data in this Array may be destroyed by this call.

dstArray ESMF_Array with destination data. The data in this Array may be destroyed by this call.

routehandle Handle to the precomputed Route.

transposeRoutehandle Handle to the transposed matrix operation. The transposed operation goes from dstArray to srcArray.

factor Factor by which to multiply source data.

[srcToDstTransposeMap] A list with as many entries as there are dimensions in srcArray, or tileCount times this many entries. Each entry maps the corresponding srcArray dimension against the specified dstArray dimension. Mixing distributed and undistributed dimensions is supported. Negative entries reverse the order of elements along the specified dimension when going from source to destination. When providing $rank \times tileCount$ elements in srcToDstTransposeMap, each block of size rank is associated with the corresponding tile (in order), and interpreted as the tile-specific transpose map.

[ignoreUnmatchedIndices] A logical flag that affects the behavior for when not all elements match between the srcArray and dstArray side. The default setting is .false., indicating that it is an error when such a situation is encountered. Setting ignoreUnmatchedIndices to .true. ignores unmatched indices.

[pipelineDepth] The pipelineDepth parameter controls how many messages a PET may have outstanding during a redist exchange. Larger values of pipelineDepth typically lead to better performance. However, on some systems too large a value may lead to performance degradation, or runtime errors.

Note that the pipeline depth has no effect on the bit-for-bit reproducibility of the results. However, it may affect the performance reproducibility of the exchange.

The ESMF_ArraySMMStore() method implements an auto-tuning scheme for the pipelineDepth parameter. The intent on the pipelineDepth argument is "inout" in order to support both overriding and accessing the auto-tuning parameter. If an argument $>= 0$ is specified, it is used for the pipelineDepth parameter, and the auto-tuning phase is skipped. In this case the pipelineDepth argument is not modified on return. If the provided argument is < 0, the pipelineDepth parameter is determined internally using the auto-tuning scheme. In this case the pipelineDepth argument is re-set to the internally determined value on return. Auto-tuning is also used if the optional pipelineDepth argument is omitted.

[rc] Return code; equals `ESMF_SUCCESS` if there are no errors.

29.5.33 ESMF_ArrayRedistStore - Precompute Array redistribution without local factor argument

INTERFACE:

```
! Private name; call using ESMF_ArrayRedistStore()
subroutine ESMF_ArrayRedistStoreNF(srcArray, dstArray, routehandle, &
  srcToDstTransposeMap, ignoreUnmatchedIndices, &
  pipelineDepth, rc)
```

ARGUMENTS:

```
  type(ESMF_Array),       intent(in)              :: srcArray
  type(ESMF_Array),       intent(inout)           :: dstArray
  type(ESMF_RouteHandle), intent(inout)           :: routehandle
-- The following arguments require argument keyword syntax (e.g. rc=rc). --
  integer,                intent(in),    optional :: srcToDstTransposeMap(:)
  logical,                intent(in),    optional :: ignoreUnmatchedIndices
  integer,                intent(inout), optional :: pipelineDepth
  integer,                intent(out),   optional :: rc
```

STATUS:

- This interface is backward compatible with ESMF versions starting at 5.2.0r. If code using this interface compiles with any version of ESMF starting with 5.2.0r, then it will compile with the current version.
- This interface was modified since ESMF version 5.2.0r. The fact that code using this interface compiles with the current ESMF version does not guarantee that it compiles with previous versions of this interface. If user code compatibility with version 5.2.0r is desired then care must be taken to limit the use of this interface to features that were available in the 5.2.0r release.
  Changes made after the 5.2.0r release:

  6.1.0 Added argument `pipelineDepth`. The new argument provide access to the tuning parameter affecting the sparse matrix execution.

  7.0.0 Added argument `transposeRoutehandle` to allow a handle to the transposed redist operation to be returned.
  Added argument `ignoreUnmatchedIndices` to support situations where not all elements between source and destination Arrays match.

  7.1.0r Removed argument `transposeRoutehandle` and provide it via interface overloading instead. This allows argument `srcArray` to stay strictly intent(in) for this entry point.

DESCRIPTION:

`ESMF_ArrayRedistStore()` is a collective method across all PETs of the current Component. The interface of the method is overloaded, allowing – in principle – each PET to call into `ESMF_ArrayRedistStore()` through a different entry point. Restrictions apply as to which combinations are sensible. All other combinations result in ESMF run time errors. The complete semantics of the `ESMF_ArrayRedistStore()` method, as provided through the separate entry points shown in 29.5.31 and 29.5.33, is described in the following paragraphs as a whole.

Store an Array redistribution operation from `srcArray` to `dstArray`. Interface 29.5.31 allows PETs to specify a `factor` argument. PETs not specifying a `factor` argument call into interface 29.5.33. If multiple PETs specify the `factor` argument, its type and kind, as well as its value must match across all PETs. If none of the PETs specify a `factor` argument the default will be a factor of 1. The resulting factor is applied to all of the source data during redistribution, allowing scaling of the data, e.g. for unit transformation.

Both `srcArray` and `dstArray` are interpreted as sequentialized vectors. The sequence is defined by the order of DistGrid dimensions and the order of tiles within the DistGrid or by user-supplied arbitrary sequence indices. See section 29.2.18 for details on the definition of *sequence indices*.

Source Array, destination Array, and the factor may be of different <type><kind>. Further, source and destination Arrays may differ in shape, however, the number of elements must match.

The default redistribution operation, when `srcToDstTransposeMap` is not specified, corresponds to the identity mapping: each element of the sequentialized source Array is copied to the sequentialized destination Array element in order.

If the `srcToDstTransposeMap` argument is provided it must be identical across all PETs. The `srcToDstTransposeMap` allows source and destination Array dimensions to be transposed during the redistribution. To support this option, the number of source and destination Array dimensions must be equal and the size of the associated dimensions must match. See section 29.2.17 for more details about the use of the `srcToDstTransposeMap` argument.

It is erroneous to specify the identical Array object for `srcArray` and `dstArray` arguments.

The routine returns an `ESMF_RouteHandle` that can be used to call `ESMF_ArrayRedist()` on any pair of Arrays that matches `srcArray` and `dstArray` in *type*, *kind*, and memory layout of the *distributed* dimensions. However, the size, number, and index order of *undistributed* dimensions may be different. See section 38.2.5 for a more detailed discussion of RouteHandle reusability.

This call is *collective* across the current VM.

srcArray `ESMF_Array` with source data.

dstArray `ESMF_Array` with destination data. The data in this Array may be destroyed by this call.

routehandle Handle to the precomputed Route.

[srcToDstTransposeMap] A list with as many entries as there are dimensions in `srcArray`, or `tileCount` times this many entries. Each entry maps the corresponding `srcArray` dimension against the specified `dstArray` dimension. Mixing distributed and undistributed dimensions is supported. Negative entries reverse the order of elements along the specified dimension when going from source to destination. When providing $rank \times tileCount$ elements in `srcToDstTransposeMap`, each block of size `rank` is associated with the corresponding tile (in order), and interpreted as the tile-specific transpose map.

[ignoreUnmatchedIndices] A logical flag that affects the behavior for when not all elements match between the `srcArray` and `dstArray` side. The default setting is `.false.`, indicating that it is an error when such a situation is encountered. Setting `ignoreUnmatchedIndices` to `.true.` ignores unmatched indices.

[pipelineDepth] The `pipelineDepth` parameter controls how many messages a PET may have outstanding during a redist exchange. Larger values of `pipelineDepth` typically lead to better performance. However, on some systems too large a value may lead to performance degradation, or runtime errors.

Note that the pipeline depth has no effect on the bit-for-bit reproducibility of the results. However, it may affect the performance reproducibility of the exchange.

The `ESMF_ArraySMMStore()` method implements an auto-tuning scheme for the `pipelineDepth` parameter. The intent on the `pipelineDepth` argument is "`inout`" in order to support both overriding and accessing the auto-tuning parameter. If an argument $>= 0$ is specified, it is used for the `pipelineDepth` parameter, and the auto-tuning phase is skipped. In this case the `pipelineDepth` argument is not modified on return. If the provided argument is < 0, the `pipelineDepth` parameter is determined internally using the

auto-tuning scheme. In this case the `pipelineDepth` argument is re-set to the internally determined value on return. Auto-tuning is also used if the optional `pipelineDepth` argument is omitted.

[rc] Return code; equals `ESMF_SUCCESS` if there are no errors.

29.5.34 ESMF_ArrayRedistStore - Precompute Array redistribution and transpose without local factor argument

INTERFACE:

```
! Private name; call using ESMF_ArrayRedistStore()
subroutine ESMF_ArrayRedistStoreNFTP(srcArray, dstArray, routehandle, &
  transposeRoutehandle, srcToDstTransposeMap, &
  ignoreUnmatchedIndices, pipelineDepth, rc)
```

ARGUMENTS:

```
    type(ESMF_Array),       intent(inout)           :: srcArray
    type(ESMF_Array),       intent(inout)           :: dstArray
    type(ESMF_RouteHandle), intent(inout)           :: routehandle
    type(ESMF_RouteHandle), intent(inout)           :: transposeRoutehandle
-- The following arguments require argument keyword syntax (e.g. rc=rc). --
    integer,                intent(in),    optional :: srcToDstTransposeMap(:)
    logical,                intent(in),    optional :: ignoreUnmatchedIndices
    integer,                intent(inout), optional :: pipelineDepth
    integer,                intent(out),   optional :: rc
```

DESCRIPTION:

`ESMF_ArrayRedistStore()` is a collective method across all PETs of the current Component. The interface of the method is overloaded, allowing – in principle – each PET to call into `ESMF_ArrayRedistStore()` through a different entry point. Restrictions apply as to which combinations are sensible. All other combinations result in ESMF run time errors. The complete semantics of the `ESMF_ArrayRedistStore()` method, as provided through the separate entry points shown in 29.5.32 and 29.5.34, is described in the following paragraphs as a whole.

Store an Array redistribution operation from `srcArray` to `dstArray`. Interface 29.5.32 allows PETs to specify a `factor` argument. PETs not specifying a `factor` argument call into interface 29.5.34. If multiple PETs specify the `factor` argument, its type and kind, as well as its value must match across all PETs. If none of the PETs specify a `factor` argument the default will be a factor of 1. The resulting factor is applied to all of the source data during redistribution, allowing scaling of the data, e.g. for unit transformation.

Both `srcArray` and `dstArray` are interpreted as sequentialized vectors. The sequence is defined by the order of DistGrid dimensions and the order of tiles within the DistGrid or by user-supplied arbitrary sequence indices. See section 29.2.18 for details on the definition of *sequence indices*.

Source Array, destination Array, and the factor may be of different <type><kind>. Further, source and destination Arrays may differ in shape, however, the number of elements must match.

The default redistribution operation, when `srcToDstTransposeMap` is not specified, corresponds to the identity mapping: each element of the sequentialized source Array is copied to the sequentialized destination Array element in order.

If the srcToDstTransposeMap argument is provided it must be identical across all PETs. The srcToDstTransposeMap allows source and destination Array dimensions to be transposed during the redistribution. To support this option, the number of source and destination Array dimensions must be equal and the size of the associated dimensions must match. See section 29.2.17 for more details about the use of the srcToDstTransposeMap argument.

It is erroneous to specify the identical Array object for srcArray and dstArray arguments.

The routine returns an ESMF_RouteHandle that can be used to call ESMF_ArrayRedist() on any pair of Arrays that matches srcArray and dstArray in *type*, *kind*, and memory layout of the *distributed* dimensions. However, the size, number, and index order of *undistributed* dimensions may be different. See section 38.2.5 for a more detailed discussion of RouteHandle reusability.

This call is *collective* across the current VM.

srcArray ESMF_Array with source data. The data in this Array may be destroyed by this call.

dstArray ESMF_Array with destination data. The data in this Array may be destroyed by this call.

routehandle Handle to the precomputed Route.

transposeRoutehandle Handle to the transposed matrix operation. The transposed operation goes from dstArray to srcArray.

[srcToDstTransposeMap] A list with as many entries as there are dimensions in srcArray, or tileCount times this many entries. Each entry maps the corresponding srcArray dimension against the specified dstArray dimension. Mixing distributed and undistributed dimensions is supported. Negative entries reverse the order of elements along the specified dimension when going from source to destination. When providing $rank \times tileCount$ elements in srcToDstTransposeMap, each block of size rank is associated with the corresponding tile (in order), and interpreted as the tile-specific transpose map.

[ignoreUnmatchedIndices] A logical flag that affects the behavior for when not all elements match between the srcArray and dstArray side. The default setting is .false., indicating that it is an error when such a situation is encountered. Setting ignoreUnmatchedIndices to .true. ignores unmatched indices.

[pipelineDepth] The pipelineDepth parameter controls how many messages a PET may have outstanding during a redist exchange. Larger values of pipelineDepth typically lead to better performance. However, on some systems too large a value may lead to performance degradation, or runtime errors.

Note that the pipeline depth has no effect on the bit-for-bit reproducibility of the results. However, it may affect the performance reproducibility of the exchange.

The ESMF_ArraySMMStore() method implements an auto-tuning scheme for the pipelineDepth parameter. The intent on the pipelineDepth argument is "inout" in order to support both overriding and accessing the auto-tuning parameter. If an argument $>= 0$ is specified, it is used for the pipelineDepth parameter, and the auto-tuning phase is skipped. In this case the pipelineDepth argument is not modified on return. If the provided argument is < 0, the pipelineDepth parameter is determined internally using the auto-tuning scheme. In this case the pipelineDepth argument is re-set to the internally determined value on return. Auto-tuning is also used if the optional pipelineDepth argument is omitted.

[rc] Return code; equals ESMF_SUCCESS if there are no errors.

29.5.35 ESMF_ArrayScatter - Scatter a Fortran array across the ESMF_Array

INTERFACE:

```
subroutine ESMF_ArrayScatter(array, farray, rootPet, tile, vm, rc)
```

ARGUMENTS:

```
  type(ESMF_Array), intent(inout) :: array
  <type> (ESMF_KIND_<kind>), intent(in), target :: farray(<rank>)
  integer, intent(in) :: rootPet
-- The following arguments require argument keyword syntax (e.g. rc=rc). --
  integer, intent(in), optional :: tile
  type(ESMF_VM), intent(in), optional :: vm
  integer, intent(out), optional :: rc
```

STATUS:

- This interface is backward compatible with ESMF versions starting at 5.2.0r. If code using this interface compiles with any version of ESMF starting with 5.2.0r, then it will compile with the current version.

DESCRIPTION:

Scatter the data of `farray` located on `rootPET` across an ESMF_Array object. A single `farray` must be scattered across a single DistGrid tile in Array. The optional `tile` argument allows selection of the tile. For Arrays defined on a single tile DistGrid the default selection (tile 1) will be correct. The shape of `farray` must match the shape of the tile in Array.

If the Array contains replicating DistGrid dimensions data will be scattered across all of the replicated pieces.

This version of the interface implements the PET-based blocking paradigm: Each PET of the VM must issue this call exactly once for *all* of its DEs. The call will block until all PET-local data objects are accessible.

The arguments are:

array The `ESMF_Array` object across which data will be scattered.

{farray} The Fortran array that is to be scattered. Only root must provide a valid `farray`, the other PETs may treat `farray` as an optional argument.

rootPet PET that holds the valid data in `farray`.

[tile] The DistGrid tile in `array` into which to scatter `farray`. By default `farray` will be scattered into tile 1.

[vm] Optional `ESMF_VM` object of the current context. Providing the VM of the current context will lower the method's overhead.

[rc] Return code; equals `ESMF_SUCCESS` if there are no errors.

29.5.36 ESMF_ArraySet - Set object-wide Array information

INTERFACE:

```
! Private name; call using ESMF_ArraySet()
subroutine ESMF_ArraySetDefault(array, computationalLWidth, &
  computationalUWidth, name, rc)
```

ARGUMENTS:

```
    type(ESMF_Array),   intent(inout)         :: array
-- The following arguments require argument keyword syntax (e.g. rc=rc). --
    integer,            intent(in),  optional :: computationalLWidth(:,:)
    integer,            intent(in),  optional :: computationalUWidth(:,:)
    character(len = *), intent(in),  optional :: name
    integer,            intent(out), optional :: rc
```

STATUS:

- This interface is backward compatible with ESMF versions starting at 5.2.0r. If code using this interface compiles with any version of ESMF starting with 5.2.0r, then it will compile with the current version.

DESCRIPTION:

Sets adjustable settings in an `ESMF_Array` object. Arrays with tensor dimensions will set values for *all* tensor components.

The arguments are:

array `ESMF_Array` object for which to set properties.

[computationalLWidth] This argument must have of size `(dimCount, localDeCount)`. `computationalLWidth` specifies the lower corner of the computational region with respect to the lower corner of the exclusive region for all local DEs.

[computationalUWidth] This argument must have of size `(dimCount, localDeCount)`. `computationalUWidth` specifies the upper corner of the computational region with respect to the upper corner of the exclusive region for all local DEs.

[name] The Array name.

[rc] Return code; equals `ESMF_SUCCESS` if there are no errors.

29.5.37 ESMF_ArraySet - Set DE-local Array information

INTERFACE:

```
! Private name; call using ESMF_ArraySet()
subroutine ESMF_ArraySetPLocalDe(array, localDe, rimSeqIndex, rc)
```

ARGUMENTS:

```
    type(ESMF_Array),   intent(inout)         :: array
    integer,            intent(in)            :: localDe
-- The following arguments require argument keyword syntax (e.g. rc=rc). --
    integer,            intent(in),  optional :: rimSeqIndex(:)
    integer,            intent(out), optional :: rc
```

STATUS:

- This interface is backward compatible with ESMF versions starting at 5.2.0r. If code using this interface compiles with any version of ESMF starting with 5.2.0r, then it will compile with the current version.

DESCRIPTION:

Sets adjustable settings in an `ESMF_Array` object for a specific localDe.

The arguments are:

array `ESMF_Array` object for which to set properties.

localDe Local DE for which to set values.

[rimSeqIndex] Sequence indices in the halo rim of localDe.

[rc] Return code; equals `ESMF_SUCCESS` if there are no errors.

29.5.38 ESMF_ArraySMM - Execute an Array sparse matrix multiplication

INTERFACE:

```
  subroutine ESMF_ArraySMM(srcArray, dstArray, routehandle, &
    routesyncflag, finishedflag, cancelledflag, zeroregion, termorderflag, &
    checkflag, dynamicMask, rc)
```

ARGUMENTS:

```
    type(ESMF_Array),               intent(in),    optional :: srcArray
    type(ESMF_Array),               intent(inout), optional :: dstArray
    type(ESMF_RouteHandle),         intent(inout)           :: routehandle
-- The following arguments require argument keyword syntax (e.g. rc=rc). --
    type(ESMF_RouteSync_Flag),      intent(in),    optional :: routesyncflag
    logical,                        intent(out),   optional :: finishedflag
    logical,                        intent(out),   optional :: cancelledflag
    type(ESMF_Region_Flag),         intent(in),    optional :: zeroregion
    type(ESMF_TermOrder_Flag),      intent(in),    optional :: termorderflag
    logical,                        intent(in),    optional :: checkflag
    type(ESMF_DynamicMask), target, intent(in),    optional :: dynamicMask
    integer,                        intent(out),   optional :: rc
```

STATUS:

- This interface is backward compatible with ESMF versions starting at 5.2.0r. If code using this interface compiles with any version of ESMF starting with 5.2.0r, then it will compile with the current version.
- This interface was modified since ESMF version 5.2.0r. The fact that code using this interface compiles with the current ESMF version does not guarantee that it compiles with previous versions of this interface. If user code compatibility with version 5.2.0r is desired then care must be taken to limit the use of this interface to features that were available in the 5.2.0r release.
  Changes made after the 5.2.0r release:

  6.1.0 Added argument `termorderflag`. The new argument gives the user control over the order in which the src terms are summed up.

  7.1.0r Added argument `dynamicMask`. The new argument supports the dynamic masking feature.

DESCRIPTION:

Execute a precomputed Array sparse matrix multiplication from `srcArray` to `dstArray`. Both `srcArray` and `dstArray` must match the respective Arrays used during `ESMF_ArraySMMStore()` in *type*, *kind*, and memory layout of the *distributed* dimensions. However, the size, number, and index order of *undistributed* dimensions may be different. See section 38.2.5 for a more detailed discussion of RouteHandle reusability.

The `srcArray` and `dstArray` arguments are optional in support of the situation where `srcArray` and/or `dstArray` are not defined on all PETs. The `srcArray` and `dstArray` must be specified on those PETs that hold source or destination DEs, respectively, but may be omitted on all other PETs. PETs that hold neither source nor destination DEs may omit both arguments.

It is erroneous to specify the identical Array object for `srcArray` and `dstArray` arguments.

See `ESMF_ArraySMMStore()` on how to precompute `routehandle`. See section 29.2.18 for details on the operation `ESMF_ArraySMM()` performs.

This call is *collective* across the current VM.

[srcArray] `ESMF_Array` with source data.

[dstArray] `ESMF_Array` with destination data.

routehandle Handle to the precomputed Route.

[routesyncflag] Indicate communication option. Default is `ESMF_ROUTESYNC_BLOCKING`, resulting in a blocking operation. See section 55.53 for a complete list of valid settings.

[finishedflag] Used in combination with `routesyncflag = ESMF_ROUTESYNC_NBTESTFINISH`. Returned `finishedflag` equal to `.true.` indicates that all operations have finished. A value of `.false.` indicates that there are still unfinished operations that require additional calls with `routesyncflag = ESMF_ROUTESYNC_NBTESTFINISH`, or a final call with `routesyncflag = ESMF_ROUTESYNC_NBWAITFINISH`. For all other `routesyncflag` settings the returned value in `finishedflag` is always `.true.`.

[cancelledflag] A value of `.true.` indicates that were cancelled communication operations. In this case the data in the `dstArray` must be considered invalid. It may have been partially modified by the call. A value of `.false.` indicates that none of the communication operations was cancelled. The data in `dstArray` is valid if `finishedflag` returns equal `.true.`.

[zeroregion] If set to `ESMF_REGION_TOTAL` *(default)* the total regions of all DEs in `dstArray` will be initialized to zero before updating the elements with the results of the sparse matrix multiplication. If set to `ESMF_REGION_EMPTY` the elements in `dstArray` will not be modified prior to the sparse matrix multiplication and results will be added to the incoming element values. Setting `zeroregion` to `ESMF_REGION_SELECT` will only zero out those elements in the destination Array that will be updated by the sparse matrix multiplication. See section 55.50 for a complete list of valid settings.

[termorderflag] Specifies the order of the source side terms in all of the destination sums. The `termorderflag` only affects the order of terms during the execution of the RouteHandle. See the 38.2.1 section for an in-depth discussion of *all* bit-for-bit reproducibility aspects related to route-based communication methods. See 55.60 for a full list of options. The default setting depends on whether the `dynamicMask` argument is present or not. With `dynamicMask` argument present, the default of `termorderflag` is `ESMF_TERMORDER_SRCSEQ`. This ensures that `all` source terms are present on the destination side, and the interpolation can be calculated as a single sum. When `dynamicMask` is absent, the default of `termorderflag` is `ESMF_TERMORDER_FREE`, allowing maximum flexibility and partial sums for optimum performance.

[checkflag] If set to `.TRUE.` the input Array pair will be checked for consistency with the precomputed operation provided by `routehandle`. If set to `.FALSE.` *(default)* only a very basic input check will be performed, leaving many inconsistencies undetected. Set `checkflag` to `.FALSE.` to achieve highest performance.

[dynamicMask] Object holding dynamic masking information. See section 38.2.6 for a discussion of dynamic masking.

[rc] Return code; equals `ESMF_SUCCESS` if there are no errors.

29.5.39 ESMF_ArraySMMRelease - Release resources associated with Array sparse matrix multiplication

INTERFACE:

```
subroutine ESMF_ArraySMMRelease(routehandle, noGarbage, rc)
```

ARGUMENTS:

```
     type(ESMF_RouteHandle), intent(inout)         :: routehandle
 -- The following arguments require argument keyword syntax (e.g. rc=rc). --
     logical,                intent(in),  optional :: noGarbage
     integer,                intent(out), optional :: rc
```

STATUS:

- This interface is backward compatible with ESMF versions starting at 5.2.0r. If code using this interface compiles with any version of ESMF starting with 5.2.0r, then it will compile with the current version.
- This interface was modified since ESMF version 5.2.0r. The fact that code using this interface compiles with the current ESMF version does not guarantee that it compiles with previous versions of this interface. If user code compatibility with version 5.2.0r is desired then care must be taken to limit the use of this interface to features that were available in the 5.2.0r release.
  Changes made after the 5.2.0r release:

  8.0.0 Added argument `noGarbage`. The argument provides a mechanism to override the default garbage collection mechanism when destroying an ESMF object.

DESCRIPTION:

Release resources associated with an Array sparse matrix multiplication. After this call `routehandle` becomes invalid.

routehandle Handle to the precomputed Route.

[noGarbage] If set to `.TRUE.` the object will be fully destroyed and removed from the ESMF garbage collection system. Note however that under this condition ESMF cannot protect against accessing the destroyed object through dangling aliases – a situation which may lead to hard to debug application crashes.

It is generally recommended to leave the `noGarbage` argument set to `.FALSE.` (the default), and to take advantage of the ESMF garbage collection system which will prevent problems with dangling aliases or incorrect sequences of destroy calls. However this level of support requires that a small remnant of the object is kept in memory past the destroy call. This can lead to an unexpected increase in memory consumption over the course of execution in applications that use temporary ESMF objects. For situations where the repeated creation and destruction of temporary objects leads to memory issues, it is recommended to call with `noGarbage` set to `.TRUE.`, fully removing the entire temporary object from memory.

[rc] Return code; equals `ESMF_SUCCESS` if there are no errors.

29.5.40 ESMF_ArraySMMStore - Precompute Array sparse matrix multiplication with local factors

INTERFACE:

```
! Private name; call using ESMF_ArraySMMStore()
subroutine ESMF_ArraySMMStore<type><kind>(srcArray, dstArray, &
  routehandle, factorList, factorIndexList, &
  ignoreUnmatchedIndices, srcTermProcessing, pipelineDepth, rc)
```

ARGUMENTS:

```
  type(ESMF_Array),          intent(in)              :: srcArray
  type(ESMF_Array),          intent(inout)           :: dstArray
  type(ESMF_RouteHandle),    intent(inout)           :: routehandle
  <type>(ESMF_KIND_<kind>), target, intent(in)       :: factorList(:)
  integer(ESMF_KIND_<kind>), intent(in)              :: factorIndexList(:,:)
-- The following arguments require argument keyword syntax (e.g. rc=rc). --
  logical,                   intent(in),    optional :: ignoreUnmatchedIndices
  integer,                   intent(inout), optional :: srcTermProcessing
  integer,                   intent(inout), optional :: pipelineDepth
  integer,                   intent(out),   optional :: rc
```

STATUS:

- This interface is backward compatible with ESMF versions starting at 5.2.0r. If code using this interface compiles with any version of ESMF starting with 5.2.0r, then it will compile with the current version.
- This interface was modified since ESMF version 5.2.0r. The fact that code using this interface compiles with the current ESMF version does not guarantee that it compiles with previous versions of this interface. If user code compatibility with version 5.2.0r is desired then care must be taken to limit the use of this interface to features that were available in the 5.2.0r release.
  Changes made after the 5.2.0r release:

  6.1.0 Added argument `srcTermProcessing`. Added argument `pipelineDepth`. The new arguments provide access to the tuning parameters affecting the sparse matrix execution.

7.0.0 Added argument `transposeRoutehandle` to allow a handle to the transposed matrix operation to be returned.
Added argument `ignoreUnmatchedIndices` to support sparse matrices that contain elements with indices that do not have a match within the source or destination Array.

7.1.0r Removed argument `transposeRoutehandle` and provide it via interface overloading instead. This allows argument `srcArray` to stay strictly intent(in) for this entry point.

DESCRIPTION:

`ESMF_ArraySMMStore()` is a collective method across all PETs of the current Component. The interface of the method is overloaded, allowing – in principle – each PET to call into `ESMF_ArraySMMStore()` through a different entry point. Restrictions apply as to which combinations are sensible. All other combinations result in ESMF run time errors. The complete semantics of the `ESMF_ArraySMMStore()` method, as provided through the separate entry points shown in 29.5.40 and 29.5.42, is described in the following paragraphs as a whole.

Store an Array sparse matrix multiplication operation from `srcArray` to `dstArray`. PETs that specify non-zero matrix coefficients must use the <type><kind> overloaded interface and provide the `factorList` and `factorIndexList` arguments. Providing `factorList` and `factorIndexList` arguments with `size(factorList) = (/0/)` and `size(factorIndexList) = (/2,0/)` or `(/4,0/)` indicates that a PET does not provide matrix elements. Alternatively, PETs that do not provide matrix elements may also call into the overloaded interface *without* `factorList` and `factorIndexList` arguments.

Both `srcArray` and `dstArray` are interpreted as sequentialized vectors. The sequence is defined by the order of DistGrid dimensions and the order of tiles within the DistGrid or by user-supplied arbitrary sequence indices. See section 29.2.18 for details on the definition of *sequence indices*.

Source and destination Arrays, as well as the supplied `factorList` argument, may be of different <type><kind>. Further source and destination Arrays may differ in shape and number of elements.

It is erroneous to specify the identical Array object for `srcArray` and `dstArray` arguments.

The routine returns an `ESMF_RouteHandle` that can be used to call `ESMF_ArraySMM()` on any pair of Arrays that matches `srcArray` and `dstArray` in *type*, *kind*, and memory layout of the *distributed* dimensions. However, the size, number, and index order of *undistributed* dimensions may be different. See section 38.2.5 for a more detailed discussion of RouteHandle reusability.

This method is overloaded for:
`ESMF_TYPEKIND_I4`, `ESMF_TYPEKIND_I8`,
`ESMF_TYPEKIND_R4`, `ESMF_TYPEKIND_R8`.

This call is *collective* across the current VM.

srcArray `ESMF_Array` with source data.

dstArray `ESMF_Array` with destination data. The data in this Array may be destroyed by this call.

routehandle Handle to the precomputed Route.

factorList List of non-zero coefficients.

factorIndexList Pairs of sequence indices for the factors stored in `factorList`.

The second dimension of `factorIndexList` steps through the list of pairs, i.e. `size(factorIndexList,2) == size(factorList)`. The first dimension of `factorIndexList` is either of size 2 or size 4.

In the *size 2 format* `factorIndexList(1,:)` specifies the sequence index of the source element in the `srcArray` while `factorIndexList(2,:)` specifies the sequence index of the destination element in `dstArray`. For this format to be a valid option source and destination Arrays must have matching number of

tensor elements (the product of the sizes of all Array tensor dimensions). Under this condition an identity matrix can be applied within the space of tensor elements for each sparse matrix factor.

The *size 4 format* is more general and does not require a matching tensor element count. Here the `factorIndexList(1,:)` specifies the sequence index while `factorIndexList(2,:)` specifies the tensor sequence index of the source element in the `srcArray`. Further `factorIndexList(3,:)` specifies the sequence index and `factorIndexList(4,:)` specifies the tensor sequence index of the destination element in the `dstArray`.

See section 29.2.18 for details on the definition of Array *sequence indices* and *tensor sequence indices*.

[ignoreUnmatchedIndices] A logical flag that affects the behavior for when sequence indices in the sparse matrix are encountered that do not have a match on the `srcArray` or `dstArray` side. The default setting is `.false.`, indicating that it is an error when such a situation is encountered. Setting `ignoreUnmatchedIndices` to `.true.` ignores entries with unmatched indices.

[srcTermProcessing] The `srcTermProcessing` parameter controls how many source terms, located on the same PET and summing into the same destination element, are summed into partial sums on the source PET before being transferred to the destination PET. A value of 0 indicates that the entire arithmetic is done on the destination PET; source elements are neither multiplied by their factors nor added into partial sums before being sent off by the source PET. A value of 1 indicates that source elements are multiplied by their factors on the source side before being sent to the destination PET. Larger values of `srcTermProcessing` indicate the maximum number of terms in the partial sums on the source side.

Note that partial sums may lead to bit-for-bit differences in the results. See section 38.2.1 for an in-depth discussion of *all* bit-for-bit reproducibility aspects related to route-based communication methods.

The `ESMF_ArraySMMStore()` method implements an auto-tuning scheme for the `srcTermProcessing` parameter. The intent on the `srcTermProcessing` argument is `"inout"` in order to support both overriding and accessing the auto-tuning parameter. If an argument $>= 0$ is specified, it is used for the `srcTermProcessing` parameter, and the auto-tuning phase is skipped. In this case the `srcTermProcessing` argument is not modified on return. If the provided argument is < 0, the `srcTermProcessing` parameter is determined internally using the auto-tuning scheme. In this case the `srcTermProcessing` argument is re-set to the internally determined value on return. Auto-tuning is also used if the optional `srcTermProcessing` argument is omitted.

[pipelineDepth] The `pipelineDepth` parameter controls how many messages a PET may have outstanding during a sparse matrix exchange. Larger values of `pipelineDepth` typically lead to better performance. However, on some systems too large a value may lead to performance degradation, or runtime errors.

Note that the pipeline depth has no effect on the bit-for-bit reproducibility of the results. However, it may affect the performance reproducibility of the exchange.

The `ESMF_ArraySMMStore()` method implements an auto-tuning scheme for the `pipelineDepth` parameter. The intent on the `pipelineDepth` argument is `"inout"` in order to support both overriding and accessing the auto-tuning parameter. If an argument $>= 0$ is specified, it is used for the `pipelineDepth` parameter, and the auto-tuning phase is skipped. In this case the `pipelineDepth` argument is not modified on return. If the provided argument is < 0, the `pipelineDepth` parameter is determined internally using the auto-tuning scheme. In this case the `pipelineDepth` argument is re-set to the internally determined value on return. Auto-tuning is also used if the optional `pipelineDepth` argument is omitted.

[rc] Return code; equals `ESMF_SUCCESS` if there are no errors.

29.5.41 ESMF_ArraySMMStore - Precompute Array sparse matrix multiplication and transpose with local factors

INTERFACE:

```
! Private name; call using ESMF_ArraySMMStore()
subroutine ESMF_ArraySMMStore<type><kind>TP(srcArray, dstArray, &
  routehandle, transposeRouthehandle, factorList, factorIndexList, &
  ignoreUnmatchedIndices, srcTermProcessing, pipelineDepth, &
  rc)
```

ARGUMENTS:

```
  type(ESMF_Array),          intent(inout)           :: srcArray
  type(ESMF_Array),          intent(inout)           :: dstArray
  type(ESMF_RouteHandle),    intent(inout)           :: routehandle
  type(ESMF_RouteHandle),    intent(inout)           :: transposeRouthehandle
  <type>(ESMF_KIND_<kind>), target, intent(in)       :: factorList(:)
  integer(ESMF_KIND_<kind>), intent(in)              :: factorIndexList(:,:)
-- The following arguments require argument keyword syntax (e.g. rc=rc). --
  logical,                   intent(in),    optional :: ignoreUnmatchedIndices
  integer,                   intent(inout), optional :: srcTermProcessing
  integer,                   intent(inout), optional :: pipelineDepth
  integer,                   intent(out),   optional :: rc
```

DESCRIPTION:

`ESMF_ArraySMMStore()` is a collective method across all PETs of the current Component. The interface of the method is overloaded, allowing – in principle – each PET to call into `ESMF_ArraySMMStore()` through a different entry point. Restrictions apply as to which combinations are sensible. All other combinations result in ESMF run time errors. The complete semantics of the `ESMF_ArraySMMStore()` method, as provided through the separate entry points shown in 29.5.41 and 29.5.43, is described in the following paragraphs as a whole.

Store an Array sparse matrix multiplication operation from `srcArray` to `dstArray`. PETs that specify non-zero matrix coefficients must use the <type><kind> overloaded interface and provide the `factorList` and `factorIndexList` arguments. Providing `factorList` and `factorIndexList` arguments with `size(factorList) = (/0/)` and `size(factorIndexList) = (/2,0/)` or `(/4,0/)` indicates that a PET does not provide matrix elements. Alternatively, PETs that do not provide matrix elements may also call into the overloaded interface *without* `factorList` and `factorIndexList` arguments.

Both `srcArray` and `dstArray` are interpreted as sequentialized vectors. The sequence is defined by the order of DistGrid dimensions and the order of tiles within the DistGrid or by user-supplied arbitrary sequence indices. See section 29.2.18 for details on the definition of *sequence indices*.

Source and destination Arrays, as well as the supplied `factorList` argument, may be of different <type><kind>. Further source and destination Arrays may differ in shape and number of elements.

It is erroneous to specify the identical Array object for `srcArray` and `dstArray` arguments.

The routine returns an `ESMF_RouteHandle` that can be used to call `ESMF_ArraySMM()` on any pair of Arrays that matches `srcArray` and `dstArray` in *type*, *kind*, and memory layout of the *distributed* dimensions. However, the size, number, and index order of *undistributed* dimensions may be different. See section 38.2.5 for a more detailed discussion of RouteHandle reusability.

This method is overloaded for:
`ESMF_TYPEKIND_I4`, `ESMF_TYPEKIND_I8`,
`ESMF_TYPEKIND_R4`, `ESMF_TYPEKIND_R8`.

This call is *collective* across the current VM.

srcArray `ESMF_Array` with source data. The data in this Array may be destroyed by this call.

dstArray `ESMF_Array` with destination data. The data in this Array may be destroyed by this call.

routehandle Handle to the precomputed Route.

[transposeRoutehandle] Handle to the transposed matrix operation. The transposed operation goes from `dstArray` to `srcArray`.

factorList List of non-zero coefficients.

factorIndexList Pairs of sequence indices for the factors stored in `factorList`.

The second dimension of `factorIndexList` steps through the list of pairs, i.e. `size(factorIndexList,2) == size(factorList)`. The first dimension of `factorIndexList` is either of size 2 or size 4.

In the *size 2 format* `factorIndexList(1,:)` specifies the sequence index of the source element in the `srcArray` while `factorIndexList(2,:)` specifies the sequence index of the destination element in `dstArray`. For this format to be a valid option source and destination Arrays must have matching number of tensor elements (the product of the sizes of all Array tensor dimensions). Under this condition an identity matrix can be applied within the space of tensor elements for each sparse matrix factor.

The *size 4 format* is more general and does not require a matching tensor element count. Here the `factorIndexList(1,:)` specifies the sequence index while `factorIndexList(2,:)` specifies the tensor sequence index of the source element in the `srcArray`. Further `factorIndexList(3,:)` specifies the sequence index and `factorIndexList(4,:)` specifies the tensor sequence index of the destination element in the `dstArray`.

See section 29.2.18 for details on the definition of Array *sequence indices* and *tensor sequence indices*.

[ignoreUnmatchedIndices] A logical flag that affects the behavior for when sequence indices in the sparse matrix are encountered that do not have a match on the `srcArray` or `dstArray` side. The default setting is `.false.`, indicating that it is an error when such a situation is encountered. Setting `ignoreUnmatchedIndices` to `.true.` ignores entries with unmatched indices.

[srcTermProcessing] The `srcTermProcessing` parameter controls how many source terms, located on the same PET and summing into the same destination element, are summed into partial sums on the source PET before being transferred to the destination PET. A value of 0 indicates that the entire arithmetic is done on the destination PET; source elements are neither multiplied by their factors nor added into partial sums before being sent off by the source PET. A value of 1 indicates that source elements are multiplied by their factors on the source side before being sent to the destination PET. Larger values of `srcTermProcessing` indicate the maximum number of terms in the partial sums on the source side.

Note that partial sums may lead to bit-for-bit differences in the results. See section 38.2.1 for an in-depth discussion of *all* bit-for-bit reproducibility aspects related to route-based communication methods.

The `ESMF_ArraySMMStore()` method implements an auto-tuning scheme for the `srcTermProcessing` parameter. The intent on the `srcTermProcessing` argument is `"inout"` in order to support both overriding and accessing the auto-tuning parameter. If an argument $>= 0$ is specified, it is used for the `srcTermProcessing` parameter, and the auto-tuning phase is skipped. In this case the `srcTermProcessing` argument is not modified on return. If the provided argument is < 0, the `srcTermProcessing` parameter is determined internally using the auto-tuning scheme. In this case the `srcTermProcessing` argument is re-set to the internally determined value on return. Auto-tuning is also used if the optional `srcTermProcessing` argument is omitted.

[pipelineDepth] The `pipelineDepth` parameter controls how many messages a PET may have outstanding during a sparse matrix exchange. Larger values of `pipelineDepth` typically lead to better performance. However, on some systems too large a value may lead to performance degradation, or runtime errors.

Note that the pipeline depth has no effect on the bit-for-bit reproducibility of the results. However, it may affect the performance reproducibility of the exchange.

The `ESMF_ArraySMMStore()` method implements an auto-tuning scheme for the `pipelineDepth` parameter. The intent on the `pipelineDepth` argument is `"inout"` in order to support both overriding and

accessing the auto-tuning parameter. If an argument $>= 0$ is specified, it is used for the `pipelineDepth` parameter, and the auto-tuning phase is skipped. In this case the `pipelineDepth` argument is not modified on return. If the provided argument is < 0, the `pipelineDepth` parameter is determined internally using the auto-tuning scheme. In this case the `pipelineDepth` argument is re-set to the internally determined value on return. Auto-tuning is also used if the optional `pipelineDepth` argument is omitted.

[rc] Return code; equals `ESMF_SUCCESS` if there are no errors.

29.5.42 ESMF_ArraySMMStore - Precompute Array sparse matrix multiplication without local factors

INTERFACE:

```
! Private name; call using ESMF_ArraySMMStore()
subroutine ESMF_ArraySMMStoreNF(srcArray, dstArray, routehandle, &
  ignoreUnmatchedIndices, srcTermProcessing, pipelineDepth, &
  rc)
```

ARGUMENTS:

```
  type(ESMF_Array),       intent(in)              :: srcArray
  type(ESMF_Array),       intent(inout)           :: dstArray
  type(ESMF_RouteHandle), intent(inout)           :: routehandle
-- The following arguments require argument keyword syntax (e.g. rc=rc). --
  logical,                intent(in),    optional :: ignoreUnmatchedIndices
  integer,                intent(inout), optional :: srcTermProcessing
  integer,                intent(inout), optional :: pipelineDepth
  integer,                intent(out),   optional :: rc
```

STATUS:

- This interface is backward compatible with ESMF versions starting at 5.2.0r. If code using this interface compiles with any version of ESMF starting with 5.2.0r, then it will compile with the current version.
- This interface was modified since ESMF version 5.2.0r. The fact that code using this interface compiles with the current ESMF version does not guarantee that it compiles with previous versions of this interface. If user code compatibility with version 5.2.0r is desired then care must be taken to limit the use of this interface to features that were available in the 5.2.0r release.
  Changes made after the 5.2.0r release:

  6.1.0 Added argument `srcTermProcessing`. Added argument `pipelineDepth`. The new arguments provide access to the tuning parameters affecting the sparse matrix execution.

  7.0.0 Added argument `transposeRoutehandle` to allow a handle to the transposed matrix operation to be returned.
  Added argument `ignoreUnmatchedIndices` to support sparse matrices that contain elements with indices that do not have a match within the source or destination Array.

  7.1.0r Removed argument `transposeRoutehandle` and provide it via interface overloading instead. This allows argument `srcArray` to stay strictly intent(in) for this entry point.

DESCRIPTION:

`ESMF_ArraySMMStore()` is a collective method across all PETs of the current Component. The interface of the method is overloaded, allowing – in principle – each PET to call into `ESMF_ArraySMMStore()` through a different entry point. Restrictions apply as to which combinations are sensible. All other combinations result in ESMF run time errors. The complete semantics of the `ESMF_ArraySMMStore()` method, as provided through the separate entry points shown in 29.5.40 and 29.5.42, is described in the following paragraphs as a whole.

Store an Array sparse matrix multiplication operation from `srcArray` to `dstArray`. PETs that specify non-zero matrix coefficients must use the <type><kind> overloaded interface and provide the `factorList` and `factorIndexList` arguments. Providing `factorList` and `factorIndexList` arguments with `size(factorList) = (/0/)` and `size(factorIndexList) = (/2,0/)` or `(/4,0/)` indicates that a PET does not provide matrix elements. Alternatively, PETs that do not provide matrix elements may also call into the overloaded interface *without* `factorList` and `factorIndexList` arguments.

Both `srcArray` and `dstArray` are interpreted as sequentialized vectors. The sequence is defined by the order of DistGrid dimensions and the order of tiles within the DistGrid or by user-supplied arbitrary sequence indices. See section 29.2.18 for details on the definition of *sequence indices*.

Source and destination Arrays, as well as the supplied `factorList` argument, may be of different <type><kind>. Further source and destination Arrays may differ in shape and number of elements.

It is erroneous to specify the identical Array object for `srcArray` and `dstArray` arguments.

The routine returns an `ESMF_RouteHandle` that can be used to call `ESMF_ArraySMM()` on any pair of Arrays that matches `srcArray` and `dstArray` in *type*, *kind*, and memory layout of the *distributed* dimensions. However, the size, number, and index order of *undistributed* dimensions may be different. See section 38.2.5 for a more detailed discussion of RouteHandle reusability.

This call is *collective* across the current VM.

srcArray `ESMF_Array` with source data.

dstArray `ESMF_Array` with destination data. The data in this Array may be destroyed by this call.

routehandle Handle to the precomputed Route.

[ignoreUnmatchedIndices] A logical flag that affects the behavior for when sequence indices in the sparse matrix are encountered that do not have a match on the `srcArray` or `dstArray` side. The default setting is `.false.`, indicating that it is an error when such a situation is encountered. Setting `ignoreUnmatchedIndices` to `.true.` ignores entries with unmatched indices.

[srcTermProcessing] The `srcTermProcessing` parameter controls how many source terms, located on the same PET and summing into the same destination element, are summed into partial sums on the source PET before being transferred to the destination PET. A value of 0 indicates that the entire arithmetic is done on the destination PET; source elements are neither multiplied by their factors nor added into partial sums before being sent off by the source PET. A value of 1 indicates that source elements are multiplied by their factors on the source side before being sent to the destination PET. Larger values of `srcTermProcessing` indicate the maximum number of terms in the partial sums on the source side.

Note that partial sums may lead to bit-for-bit differences in the results. See section 38.2.1 for an in-depth discussion of *all* bit-for-bit reproducibility aspects related to route-based communication methods.

The `ESMF_ArraySMMStore()` method implements an auto-tuning scheme for the `srcTermProcessing` parameter. The intent on the `srcTermProcessing` argument is `"inout"` in order to support both overriding and accessing the auto-tuning parameter. If an argument $>= 0$ is specified, it is used for the `srcTermProcessing` parameter, and the auto-tuning phase is skipped. In this case the `srcTermProcessing` argument is not modified on return. If the provided argument is < 0, the `srcTermProcessing` parameter is determined internally using the auto-tuning scheme. In this case the

srcTermProcessing argument is re-set to the internally determined value on return. Auto-tuning is also used if the optional srcTermProcessing argument is omitted.

[pipelineDepth] The pipelineDepth parameter controls how many messages a PET may have outstanding during a sparse matrix exchange. Larger values of pipelineDepth typically lead to better performance. However, on some systems too large a value may lead to performance degradation, or runtime errors.

Note that the pipeline depth has no effect on the bit-for-bit reproducibility of the results. However, it may affect the performance reproducibility of the exchange.

The ESMF_ArraySMMStore() method implements an auto-tuning scheme for the pipelineDepth parameter. The intent on the pipelineDepth argument is "inout" in order to support both overriding and accessing the auto-tuning parameter. If an argument $>= 0$ is specified, it is used for the pipelineDepth parameter, and the auto-tuning phase is skipped. In this case the pipelineDepth argument is not modified on return. If the provided argument is < 0, the pipelineDepth parameter is determined internally using the auto-tuning scheme. In this case the pipelineDepth argument is re-set to the internally determined value on return. Auto-tuning is also used if the optional pipelineDepth argument is omitted.

[rc] Return code; equals ESMF_SUCCESS if there are no errors.

29.5.43 ESMF_ArraySMMStore - Precompute Array sparse matrix multiplication and transpose without local factors

INTERFACE:

```
! Private name; call using ESMF_ArraySMMStore()
subroutine ESMF_ArraySMMStoreNFTP(srcArray, dstArray, routehandle, &
  transposeRoutehandle, ignoreUnmatchedIndices, &
  srcTermProcessing, pipelineDepth, rc)
```

ARGUMENTS:

```
     type(ESMF_Array),       intent(inout)           :: srcArray
     type(ESMF_Array),       intent(inout)           :: dstArray
     type(ESMF_RouteHandle), intent(inout)           :: routehandle
     type(ESMF_RouteHandle), intent(inout)           :: transposeRoutehandle
 -- The following arguments require argument keyword syntax (e.g. rc=rc). --
     logical,                intent(in),    optional :: ignoreUnmatchedIndices
     integer,                intent(inout), optional :: srcTermProcessing
     integer,                intent(inout), optional :: pipelineDepth
     integer,                intent(out),   optional :: rc
```

DESCRIPTION:

ESMF_ArraySMMStore() is a collective method across all PETs of the current Component. The interface of the method is overloaded, allowing – in principle – each PET to call into ESMF_ArraySMMStore() through a different entry point. Restrictions apply as to which combinations are sensible. All other combinations result in ESMF run time errors. The complete semantics of the ESMF_ArraySMMStore() method, as provided through the separate entry points shown in 29.5.41 and 29.5.43, is described in the following paragraphs as a whole.

Store an Array sparse matrix multiplication operation from srcArray to dstArray. PETs that specify non-zero matrix coefficients must use the <type><kind> overloaded interface and provide the factorList

and factorIndexList arguments. Providing factorList and factorIndexList arguments with size(factorList) = (/0/) and size(factorIndexList) = (/2,0/) or (/4,0/) indicates that a PET does not provide matrix elements. Alternatively, PETs that do not provide matrix elements may also call into the overloaded interface *without* factorList and factorIndexList arguments.

Both srcArray and dstArray are interpreted as sequentialized vectors. The sequence is defined by the order of DistGrid dimensions and the order of tiles within the DistGrid or by user-supplied arbitrary sequence indices. See section 29.2.18 for details on the definition of *sequence indices*.

Source and destination Arrays, as well as the supplied factorList argument, may be of different <type><kind>. Further source and destination Arrays may differ in shape and number of elements.

It is erroneous to specify the identical Array object for srcArray and dstArray arguments.

The routine returns an ESMF_RouteHandle that can be used to call ESMF_ArraySMM() on any pair of Arrays that matches srcArray and dstArray in *type*, *kind*, and memory layout of the *distributed* dimensions. However, the size, number, and index order of *undistributed* dimensions may be different. See section 38.2.5 for a more detailed discussion of RouteHandle reusability.

This call is *collective* across the current VM.

srcArray ESMF_Array with source data. The data in this Array may be destroyed by this call.

dstArray ESMF_Array with destination data. The data in this Array may be destroyed by this call.

routehandle Handle to the precomputed Route.

[transposeRoutehandle] Handle to the transposed matrix operation. The transposed operation goes from dstArray to srcArray.

[ignoreUnmatchedIndices] A logical flag that affects the behavior for when sequence indices in the sparse matrix are encountered that do not have a match on the srcArray or dstArray side. The default setting is .false., indicating that it is an error when such a situation is encountered. Setting ignoreUnmatchedIndices to .true. ignores entries with unmatched indices.

[srcTermProcessing] The srcTermProcessing parameter controls how many source terms, located on the same PET and summing into the same destination element, are summed into partial sums on the source PET before being transferred to the destination PET. A value of 0 indicates that the entire arithmetic is done on the destination PET; source elements are neither multiplied by their factors nor added into partial sums before being sent off by the source PET. A value of 1 indicates that source elements are multiplied by their factors on the source side before being sent to the destination PET. Larger values of srcTermProcessing indicate the maximum number of terms in the partial sums on the source side.

Note that partial sums may lead to bit-for-bit differences in the results. See section 38.2.1 for an in-depth discussion of *all* bit-for-bit reproducibility aspects related to route-based communication methods.

The ESMF_ArraySMMStore() method implements an auto-tuning scheme for the srcTermProcessing parameter. The intent on the srcTermProcessing argument is "inout" in order to support both overriding and accessing the auto-tuning parameter. If an argument $>= 0$ is specified, it is used for the srcTermProcessing parameter, and the auto-tuning phase is skipped. In this case the srcTermProcessing argument is not modified on return. If the provided argument is < 0, the srcTermProcessing parameter is determined internally using the auto-tuning scheme. In this case the srcTermProcessing argument is re-set to the internally determined value on return. Auto-tuning is also used if the optional srcTermProcessing argument is omitted.

[pipelineDepth] The pipelineDepth parameter controls how many messages a PET may have outstanding during a sparse matrix exchange. Larger values of pipelineDepth typically lead to better performance. However, on some systems too large a value may lead to performance degradation, or runtime errors.

Note that the pipeline depth has no effect on the bit-for-bit reproducibility of the results. However, it may affect the performance reproducibility of the exchange.

The ESMF_ArraySMMStore() method implements an auto-tuning scheme for the pipelineDepth parameter. The intent on the pipelineDepth argument is "inout" in order to support both overriding and accessing the auto-tuning parameter. If an argument $>= 0$ is specified, it is used for the pipelineDepth parameter, and the auto-tuning phase is skipped. In this case the pipelineDepth argument is not modified on return. If the provided argument is < 0, the pipelineDepth parameter is determined internally using the auto-tuning scheme. In this case the pipelineDepth argument is re-set to the internally determined value on return. Auto-tuning is also used if the optional pipelineDepth argument is omitted.

[rc] Return code; equals ESMF_SUCCESS if there are no errors.

29.5.44 ESMF_ArraySMMStore - Precompute sparse matrix multiplication using factors read from file.

INTERFACE:

```
  ! Private name; call using ESMF_ArraySMMStore()
  subroutine ESMF_ArraySMMStoreFromFile(srcArray, dstArray, filename, &
    routehandle, ignoreUnmatchedIndices, &
    srcTermProcessing, pipelineDepth, rc)

  ! ARGUMENTS:
    type(ESMF_Array),       intent(in)              :: srcArray
    type(ESMF_Array),       intent(inout)           :: dstArray
    character(len=*),       intent(in)              :: filename
    type(ESMF_RouteHandle), intent(inout)           :: routehandle
-- The following arguments require argument keyword syntax (e.g. rc=rc). --
    logical,                intent(in),    optional :: ignoreUnmatchedIndices
    integer,                intent(inout), optional :: srcTermProcessing
    integer,                intent(inout), optional :: pipeLineDepth
    integer,                intent(out),   optional :: rc
```

DESCRIPTION:

Compute an ESMF_RouteHandle using factors read from file.

The arguments are:

srcArray ESMF_Array with source data.

dstArray ESMF_Array with destination data. The data in this Array may be destroyed by this call.

filename Path to the file containing weights for creating an ESMF_RouteHandle. See (12.9) for a description of the SCRIP weight file format. Only "row", "col", and "S" variables are required. They must be one-dimensionsal with dimension "n_s".

routehandle Handle to the ESMF_RouteHandle.

[ignoreUnmatchedIndices] A logical flag that affects the behavior for when sequence indices in the sparse matrix are encountered that do not have a match on the srcArray or dstArray side. The default setting is .false., indicating that it is an error when such a situation is encountered. Setting ignoreUnmatchedIndices to .true. ignores entries with unmatched indices.

[srcTermProcessing] The `srcTermProcessing` parameter controls how many source terms, located on the same PET and summing into the same destination element, are summed into partial sums on the source PET before being transferred to the destination PET. A value of 0 indicates that the entire arithmetic is done on the destination PET; source elements are neither multiplied by their factors nor added into partial sums before being sent off by the source PET. A value of 1 indicates that source elements are multiplied by their factors on the source side before being sent to the destination PET. Larger values of `srcTermProcessing` indicate the maximum number of terms in the partial sums on the source side.

Note that partial sums may lead to bit-for-bit differences in the results. See section 38.2.1 for an in-depth discussion of *all* bit-for-bit reproducibility aspects related to route-based communication methods.

The `ESMF_ArraySMMStore()` method implements an auto-tuning scheme for the `srcTermProcessing` parameter. The intent on the `srcTermProcessing` argument is `"inout"` in order to support both overriding and accessing the auto-tuning parameter. If an argument $>= 0$ is specified, it is used for the `srcTermProcessing` parameter, and the auto-tuning phase is skipped. In this case the `srcTermProcessing` argument is not modified on return. If the provided argument is < 0, the `srcTermProcessing` parameter is determined internally using the auto-tuning scheme. In this case the `srcTermProcessing` argument is re-set to the internally determined value on return. Auto-tuning is also used if the optional `srcTermProcessing` argument is omitted.

[pipelineDepth] The `pipelineDepth` parameter controls how many messages a PET may have outstanding during a sparse matrix exchange. Larger values of `pipelineDepth` typically lead to better performance. However, on some systems too large a value may lead to performance degradation, or runtime errors.

Note that the pipeline depth has no effect on the bit-for-bit reproducibility of the results. However, it may affect the performance reproducibility of the exchange. The `ESMF_ArraySMMStore()` method implements an auto-tuning scheme for the `pipelineDepth` parameter. The intent on the `pipelineDepth` argument is `"inout"` in order to support both overriding and accessing the auto-tuning parameter. If an argument $>= 0$ is specified, it is used for the `pipelineDepth` parameter, and the auto-tuning phase is skipped. In this case the `pipelineDepth` argument is not modified on return. If the provided argument is < 0, the `pipelineDepth` parameter is determined internally using the auto-tuning scheme. In this case the `pipelineDepth` argument is re-set to the internally determined value on return. Auto-tuning is also used if the optional `pipelineDepth` argument is omitted.

[rc] Return code; equals `ESMF_SUCCESS` if there are no errors.

29.5.45 ESMF_ArraySMMStore - Precompute sparse matrix multiplication and transpose using factors read from file.

INTERFACE:

```
  ! Private name; call using ESMF_ArraySMMStore()
  subroutine ESMF_ArraySMMStoreFromFileTP(srcArray, dstArray, filename, &
    routehandle, transposeRoutehandle, ignoreUnmatchedIndices,&
    srcTermProcessing, pipelineDepth, rc)

  ! ARGUMENTS:
    type(ESMF_Array),       intent(inout)           :: srcArray
    type(ESMF_Array),       intent(inout)           :: dstArray
    character(len=*),       intent(in)              :: filename
    type(ESMF_RouteHandle), intent(inout)           :: routehandle
    type(ESMF_RouteHandle), intent(inout)           :: transposeRoutehandle
 -- The following arguments require argument keyword syntax (e.g. rc=rc). --
```

```
logical,                intent(in),    optional :: ignoreUnmatchedIndices
integer,                intent(inout), optional :: srcTermProcessing
integer,                intent(inout), optional :: pipeLineDepth
integer,                intent(out),   optional :: rc
```

DESCRIPTION:

Compute an `ESMF_RouteHandle` using factors read from file.

The arguments are:

srcArray `ESMF_Array` with source data. The data in this Array may be destroyed by this call.

dstArray `ESMF_Array` with destination data. The data in this Array may be destroyed by this call.

filename Path to the file containing weights for creating an `ESMF_RouteHandle`. See (12.9) for a description of the SCRIP weight file format. Only "row", "col", and "S" variables are required. They must be one-dimensionsal with dimension "n_s".

routehandle Handle to the `ESMF_RouteHandle`.

[transposeRoutehandle] Handle to the transposed matrix operation. The transposed operation goes from `dstArray` to `srcArray`.

[ignoreUnmatchedIndices] A logical flag that affects the behavior for when sequence indices in the sparse matrix are encountered that do not have a match on the `srcArray` or `dstArray` side. The default setting is `.false.`, indicating that it is an error when such a situation is encountered. Setting `ignoreUnmatchedIndices` to `.true.` ignores entries with unmatched indices.

[srcTermProcessing] The `srcTermProcessing` parameter controls how many source terms, located on the same PET and summing into the same destination element, are summed into partial sums on the source PET before being transferred to the destination PET. A value of 0 indicates that the entire arithmetic is done on the destination PET; source elements are neither multiplied by their factors nor added into partial sums before being sent off by the source PET. A value of 1 indicates that source elements are multiplied by their factors on the source side before being sent to the destination PET. Larger values of `srcTermProcessing` indicate the maximum number of terms in the partial sums on the source side.

Note that partial sums may lead to bit-for-bit differences in the results. See section 38.2.1 for an in-depth discussion of *all* bit-for-bit reproducibility aspects related to route-based communication methods.

The `ESMF_ArraySMMStore()` method implements an auto-tuning scheme for the `srcTermProcessing` parameter. The intent on the `srcTermProcessing` argument is "`inout`" in order to support both overriding and accessing the auto-tuning parameter. If an argument $>= 0$ is specified, it is used for the `srcTermProcessing` parameter, and the auto-tuning phase is skipped. In this case the `srcTermProcessing` argument is not modified on return. If the provided argument is < 0, the `srcTermProcessing` parameter is determined internally using the auto-tuning scheme. In this case the `srcTermProcessing` argument is re-set to the internally determined value on return. Auto-tuning is also used if the optional `srcTermProcessing` argument is omitted.

[pipelineDepth] The `pipelineDepth` parameter controls how many messages a PET may have outstanding during a sparse matrix exchange. Larger values of `pipelineDepth` typically lead to better performance. However, on some systems too large a value may lead to performance degradation, or runtime errors.

Note that the pipeline depth has no effect on the bit-for-bit reproducibility of the results. However, it may affect the performance reproducibility of the exchange. The `ESMF_ArraySMMStore()` method implements an auto-tuning scheme for the `pipelineDepth` parameter. The intent on the `pipelineDepth` argument is "`inout`" in order to support both overriding and accessing the auto-tuning parameter. If an argument $>= 0$ is specified, it is used for the `pipelineDepth` parameter, and the auto-tuning phase is skipped. In this case the `pipelineDepth` argument is not modified on return. If the provided argument is < 0, the `pipelineDepth`

parameter is determined internally using the auto-tuning scheme. In this case the `pipelineDepth` argument is re-set to the internally determined value on return. Auto-tuning is also used if the optional `pipelineDepth` argument is omitted.

[rc] Return code; equals `ESMF_SUCCESS` if there are no errors.

29.5.46 ESMF_ArraySync - Synchronize DEs across the Array in case of sharing

INTERFACE:

```
subroutine ESMF_ArraySync(array, rc)
```

ARGUMENTS:

```
     type(ESMF_Array), intent(in)            :: array
 -- The following arguments require argument keyword syntax (e.g. rc=rc). --
     integer,          intent(out), optional :: rc
```

DESCRIPTION:

Synchronizes access to DEs across `array` to make sure PETs correctly access the data for read and write when DEs are shared.

The arguments are:

array Specified `ESMF_Array` object.

[rc] Return code; equals `ESMF_SUCCESS` if there are no errors.

29.5.47 ESMF_ArrayValidate - Validate object-wide Array information

INTERFACE:

```
subroutine ESMF_ArrayValidate(array, rc)
```

ARGUMENTS:

```
     type(ESMF_Array), intent(in)            :: array
 -- The following arguments require argument keyword syntax (e.g. rc=rc). --
     integer,          intent(out), optional :: rc
```

STATUS:

- This interface is backward compatible with ESMF versions starting at 5.2.0r. If code using this interface compiles with any version of ESMF starting with 5.2.0r, then it will compile with the current version.

DESCRIPTION:

Validates that the `Array` is internally consistent. The method returns an error code if problems are found.

The arguments are:

array Specified `ESMF_Array` object.

[rc] Return code; equals `ESMF_SUCCESS` if there are no errors.

29.5.48 ESMF_ArrayWrite - Write Array data into a file

INTERFACE:

```
   subroutine ESMF_ArrayWrite(array, fileName, &
       variableName, convention, purpose,  &
       overwrite, status, timeslice, iofmt, rc)
```

ARGUMENTS:

```
     type(ESMF_Array),           intent(in)            :: array
     character(*),               intent(in)            :: fileName
 -- The following arguments require argument keyword syntax (e.g. rc=rc). --
     character(*),               intent(in),  optional :: variableName
     character(*),               intent(in),  optional :: convention
     character(*),               intent(in),  optional :: purpose
     logical,                    intent(in),  optional :: overwrite
     type(ESMF_FileStatus_Flag), intent(in),  optional :: status
     integer,                    intent(in),  optional :: timeslice
     type(ESMF_IOFmt_Flag),      intent(in),  optional :: iofmt
     integer,                    intent(out), optional :: rc
```

DESCRIPTION:

Write Array data into a file. For this API to be functional, the environment variable `ESMF_PIO` should be set to either "internal" or "external" when the ESMF library is built. Please see the section on Data I/O, 39.2.

When `convention` and `purpose` arguments are specified, a NetCDF variable can be created with user-specified dimension labels and attributes. Dimension labels may be defined for both gridded and ungridded dimensions. Dimension labels for gridded dimensions are specified at the DistGrid level by attaching an ESMF Attribute package to it. The Attribute package must contain an attribute named by the pre-defined ESMF parameter `ESMF_ATT_GRIDDED_DIM_LABELS`. The corresponding value is an array of character strings specifying the desired names of the dimensions. Likewise, for ungridded dimensions, an Attribute package is attached at the Array level. The name of the name must be `ESMF_ATT_UNGRIDDED_DIM_LABELS`.

NetCDF attributes for the variable can also be specified. As with dimension labels, an Attribute package is added to the Array with the desired names and values. A value may be either a scalar character string, or a scalar or array of type integer, real, or double precision. Dimension label attributes can co-exist with variable attributes within a common Attribute package.

The arguments are:

array The `ESMF_Array` object that contains data to be written.

fileName The name of the output file to which Array data is written. If this is a multi-tile Array, then fileName must contain exactly one instance of "*"; this is a placeholder that will be replaced by the tile number, with each tile being written to a separate file. (For example, for a fileName of "myfile*.nc", tile 1 will be written to "myfile1.nc", tile 2 to "myfile2.nc", etc.) (This handling of the fileName for multi-tile I/O is subject to change.)

[variableName] Variable name in the output file; default is the "name" of Array. Use this argument only in the I/O format (such as NetCDF) that supports variable name. If the I/O format does not support this (such as binary format), ESMF will return an error code.

[convention] Specifies an Attribute package associated with the Array, used to create NetCDF dimension labels and attributes for the variable in the file. When this argument is present, the `purpose` argument must also be present. Use this argument only with a NetCDF I/O format. If binary format is used, ESMF will return an error code.

[purpose] Specifies an Attribute package associated with the Array, used to create NetCDF dimension labels and attributes for the variable in the file. When this argument is present, the `convention` argument must also be present. Use this argument only with a NetCDF I/O format. If binary format is used, ESMF will return an error code.

[overwrite] A logical flag, the default is .false., i.e., existing Array data may *not* be overwritten. If .true., only the data corresponding to the Array's name will be be overwritten. If the `timeslice` option is given, only data for the given timeslice may be overwritten. Note that it is always an error to attempt to overwrite a NetCDF variable with data which has a different shape.

[status] The file status. Please see Section 55.22 for the list of options. If not present, defaults to `ESMF_FILESTATUS_UNKNOWN`.

[timeslice] Some I/O formats (e.g. NetCDF) support the output of data in form of time slices. An unlimited dimension called `time` is defined in the file variable for this capability. The `timeslice` argument provides access to the `time` dimension, and must have a positive value. The behavior of this option may depend on the setting of the `overwrite` flag:

`overwrite = .false.`**:** If the timeslice value is less than the maximum time already in the file, the write will fail.

`overwrite = .true.`**:** Any positive timeslice value is valid.

By default, i.e. by omitting the `timeslice` argument, no provisions for time slicing are made in the output file, however, if the file already contains a time axis for the variable, a timeslice one greater than the maximum will be written.

[iofmt] The I/O format. Please see Section 55.30 for the list of options. If not present, defaults to `ESMF_IOFMT_NETCDF`.

[rc] Return code; equals `ESMF_SUCCESS` if there are no errors.

29.5.49 ESMF_SparseMatrixWrite - Write a sparse matrix to file

INTERFACE:

```
subroutine ESMF_SparseMatrixWrite(factorList, factorIndexList, fileName, &
  rc)
```

ARGUMENTS:

```
     real(ESMF_KIND_R8),    intent(in)            :: factorList(:)
     integer(ESMF_KIND_I4), intent(in)            :: factorIndexList(:,:)
     character(*),          intent(in)            :: fileName
 -- The following arguments require argument keyword syntax (e.g. rc=rc). --
     integer,               intent(out), optional :: rc
```

DESCRIPTION:

Write the `factorList` and `factorIndexList` into a NetCDF file. The data is stored in SCRIP format documented under section (12.9).

Limitations:

- Only `real(ESMF_KIND_R8) factorList` and `integer(ESMF_KIND_I4) factorIndexList` supported.

The arguments are:

factorList The sparse matrix factors to be written.

factorIndexList The sparse matrix sequence indices to be written.

fileName The name of the output file to be written.

[rc] Return code; equals `ESMF_SUCCESS` if there are no errors.

29.6 Class API: DynamicMask Methods

29.6.1 ESMF_DynamicMaskSetR8R8R8 - Set DynamicMask for R8R8R8

INTERFACE:

```
   subroutine ESMF_DynamicMaskSetR8R8R8(dynamicMask, dynamicMaskRoutine, &
     handleAllElements, dynamicSrcMaskValue, &
     dynamicDstMaskValue, rc)
```

ARGUMENTS:

```
     type(ESMF_DynamicMask), intent(out)           :: dynamicMask
     procedure(ESMF_DynamicMaskRoutineR8R8R8)      :: dynamicMaskRoutine
 -- The following arguments require argument keyword syntax (e.g. rc=rc). --
     logical,                intent(in),  optional :: handleAllElements
     real(ESMF_KIND_R8),     intent(in),  optional :: dynamicSrcMaskValue
     real(ESMF_KIND_R8),     intent(in),  optional :: dynamicDstMaskValue
     integer,                intent(out), optional :: rc
```

DESCRIPTION:

Set an ESMF_DynamicMask object suitable for destination element typekind ESMF_TYPEKIND_R8, factor typekind ESMF_TYPEKIND_R8, and source element typekind ESMF_TYPEKIND_R8.

All values in dynamicMask will be reset by this call.

See section 38.2.6 for a general discussion of dynamic masking.

The arguments are:

dynamicMask DynamicMask object.

dynamicMaskRoutine The routine responsible for handling dynamically masked source and destination elements. See section 38.2.6 for the precise definition of the dynamicMaskRoutine procedure interface. The routine is only called on PETs where *at least one* interpolation element is identified for special handling.

[handleAllElements] If set to .true., all local elements, regardless of their dynamic masking status, are made available to dynamicMaskRoutine for handling. This option can be used to implement fully customized interpolations based on the information provided by ESMF. The default is .false., meaning that only elements affected by dynamic masking will be handed to dynamicMaskRoutine.

[dynamicSrcMaskValue] The value for which a source element is considered dynamically masked. The default is to *not* consider any source elements as dynamically masked.

[dynamicDstMaskValue] The value for which a destination element is considered dynamically masked. The default is to *not* consider any destination elements as dynamically masked.

[rc] Return code; equals ESMF_SUCCESS if there are no errors.

29.6.2 ESMF_DynamicMaskSetR8R8R8V - Set DynamicMask for R8R8R8 with vectorization

INTERFACE:

```
subroutine ESMF_DynamicMaskSetR8R8R8V(dynamicMask, dynamicMaskRoutine, &
  handleAllElements, dynamicSrcMaskValue, &
  dynamicDstMaskValue, rc)
```

ARGUMENTS:

```
  type(ESMF_DynamicMask), intent(out)           :: dynamicMask
  procedure(ESMF_DynamicMaskRoutineR8R8R8V)     :: dynamicMaskRoutine
-- The following arguments require argument keyword syntax (e.g. rc=rc). --
  logical,                intent(in),  optional :: handleAllElements
  real(ESMF_KIND_R8),     intent(in),  optional :: dynamicSrcMaskValue
  real(ESMF_KIND_R8),     intent(in),  optional :: dynamicDstMaskValue
  integer,                intent(out), optional :: rc
```

DESCRIPTION:

Set an ESMF_DynamicMask object suitable for destination element typekind ESMF_TYPEKIND_R8, factor typekind ESMF_TYPEKIND_R8, and source element typekind ESMF_TYPEKIND_R8.

All values in `dynamicMask` will be reset by this call.

See section 38.2.6 for a general discussion of dynamic masking.

The arguments are:

dynamicMask DynamicMask object.

dynamicMaskRoutine The routine responsible for handling dynamically masked source and destination elements. See section 38.2.6 for the precise definition of the `dynamicMaskRoutine` procedure interface. The routine is only called on PETs where *at least one* interpolation element is identified for special handling.

[handleAllElements] If set to `.true.`, all local elements, regardless of their dynamic masking status, are made available to `dynamicMaskRoutine` for handling. This option can be used to implement fully customized interpolations based on the information provided by ESMF. The default is `.false.`, meaning that only elements affected by dynamic masking will be handed to `dynamicMaskRoutine`.

[dynamicSrcMaskValue] The value for which a source element is considered dynamically masked. The default is to *not* consider any source elements as dynamically masked.

[dynamicDstMaskValue] The value for which a destination element is considered dynamically masked. The default is to *not* consider any destination elements as dynamically masked.

[rc] Return code; equals `ESMF_SUCCESS` if there are no errors.

29.6.3 ESMF_DynamicMaskSetR4R8R4 - Set DynamicMask for R4R8R4

INTERFACE:

```
subroutine ESMF_DynamicMaskSetR4R8R4(dynamicMask, dynamicMaskRoutine, &
  handleAllElements, dynamicSrcMaskValue, &
  dynamicDstMaskValue, rc)
```

ARGUMENTS:

```
  type(ESMF_DynamicMask), intent(out)           :: dynamicMask
  procedure(ESMF_DynamicMaskRoutineR4R8R4)      :: dynamicMaskRoutine
-- The following arguments require argument keyword syntax (e.g. rc=rc). --
  logical,                intent(in),  optional :: handleAllElements
  real(ESMF_KIND_R4),     intent(in),  optional :: dynamicSrcMaskValue
  real(ESMF_KIND_R4),     intent(in),  optional :: dynamicDstMaskValue
  integer,                intent(out), optional :: rc
```

DESCRIPTION:

Set an `ESMF_DynamicMask` object suitable for destination element typekind `ESMF_TYPEKIND_R4`, factor typekind `ESMF_TYPEKIND_R8`, and source element typekind `ESMF_TYPEKIND_R4`.

All values in `dynamicMask` will be reset by this call.

See section 38.2.6 for a general discussion of dynamic masking.

The arguments are:

dynamicMask DynamicMask object.

dynamicMaskRoutine The routine responsible for handling dynamically masked source and destination elements. See section 38.2.6 for the precise definition of the `dynamicMaskRoutine` procedure interface. The routine is only called on PETs where *at least one* interpolation element is identified for special handling.

[handleAllElements] If set to `.true.`, all local elements, regardless of their dynamic masking status, are made available to `dynamicMaskRoutine` for handling. This option can be used to implement fully customized interpolations based on the information provided by ESMF. The default is `.false.`, meaning that only elements affected by dynamic masking will be handed to `dynamicMaskRoutine`.

[dynamicSrcMaskValue] The value for which a source element is considered dynamically masked. The default is to *not* consider any source elements as dynamically masked.

[dynamicDstMaskValue] The value for which a destination element is considered dynamically masked. The default is to *not* consider any destination elements as dynamically masked.

[rc] Return code; equals `ESMF_SUCCESS` if there are no errors.

29.6.4 ESMF_DynamicMaskSetR4R8R4V - Set DynamicMask for R4R8R4 with vectorization

INTERFACE:

```
subroutine ESMF_DynamicMaskSetR4R8R4V(dynamicMask, dynamicMaskRoutine, &
  handleAllElements, dynamicSrcMaskValue, &
  dynamicDstMaskValue, rc)
```

ARGUMENTS:

```
  type(ESMF_DynamicMask), intent(out)           :: dynamicMask
  procedure(ESMF_DynamicMaskRoutineR4R8R4V)     :: dynamicMaskRoutine
-- The following arguments require argument keyword syntax (e.g. rc=rc). --
  logical,                intent(in),  optional :: handleAllElements
  real(ESMF_KIND_R4),     intent(in),  optional :: dynamicSrcMaskValue
  real(ESMF_KIND_R4),     intent(in),  optional :: dynamicDstMaskValue
  integer,                intent(out), optional :: rc
```

DESCRIPTION:

Set an `ESMF_DynamicMask` object suitable for destination element typekind `ESMF_TYPEKIND_R4`, factor typekind `ESMF_TYPEKIND_R8`, and source element typekind `ESMF_TYPEKIND_R4`.

All values in `dynamicMask` will be reset by this call.

See section 38.2.6 for a general discussion of dynamic masking.

The arguments are:

dynamicMask DynamicMask object.

dynamicMaskRoutine The routine responsible for handling dynamically masked source and destination elements. See section 38.2.6 for the precise definition of the `dynamicMaskRoutine` procedure interface. The routine is only called on PETs where *at least one* interpolation element is identified for special handling.

[handleAllElements] If set to `.true.`, all local elements, regardless of their dynamic masking status, are made available to `dynamicMaskRoutine` for handling. This option can be used to implement fully customized interpolations based on the information provided by ESMF. The default is `.false.`, meaning that only elements affected by dynamic masking will be handed to `dynamicMaskRoutine`.

[dynamicSrcMaskValue] The value for which a source element is considered dynamically masked. The default is to *not* consider any source elements as dynamically masked.

[dynamicDstMaskValue] The value for which a destination element is considered dynamically masked. The default is to *not* consider any destination elements as dynamically masked.

[rc] Return code; equals `ESMF_SUCCESS` if there are no errors.

29.6.5 ESMF_DynamicMaskSetR4R4R4 - Set DynamicMask for R4R4R4

INTERFACE:

```
subroutine ESMF_DynamicMaskSetR4R4R4(dynamicMask, dynamicMaskRoutine, &
  handleAllElements, dynamicSrcMaskValue, &
  dynamicDstMaskValue, rc)
```

ARGUMENTS:

```
  type(ESMF_DynamicMask), intent(out)           :: dynamicMask
  procedure(ESMF_DynamicMaskRoutineR4R4R4)      :: dynamicMaskRoutine
-- The following arguments require argument keyword syntax (e.g. rc=rc). --
  logical,                intent(in),  optional :: handleAllElements
  real(ESMF_KIND_R4),     intent(in),  optional :: dynamicSrcMaskValue
  real(ESMF_KIND_R4),     intent(in),  optional :: dynamicDstMaskValue
  integer,                intent(out), optional :: rc
```

DESCRIPTION:

Set an `ESMF_DynamicMask` object suitable for destination element typekind `ESMF_TYPEKIND_R4`, factor typekind `ESMF_TYPEKIND_R4`, and source element typekind `ESMF_TYPEKIND_R4`.

All values in `dynamicMask` will be reset by this call.

See section 38.2.6 for a general discussion of dynamic masking.

The arguments are:

dynamicMask DynamicMask object.

dynamicMaskRoutine The routine responsible for handling dynamically masked source and destination elements. See section 38.2.6 for the precise definition of the `dynamicMaskRoutine` procedure interface. The routine is only called on PETs where *at least one* interpolation element is identified for special handling.

[handleAllElements] If set to `.true.`, all local elements, regardless of their dynamic masking status, are made available to `dynamicMaskRoutine` for handling. This option can be used to implement fully customized interpolations based on the information provided by ESMF. The default is `.false.`, meaning that only elements affected by dynamic masking will be handed to `dynamicMaskRoutine`.

[dynamicSrcMaskValue] The value for which a source element is considered dynamically masked. The default is to *not* consider any source elements as dynamically masked.

[dynamicDstMaskValue] The value for which a destination element is considered dynamically masked. The default is to *not* consider any destination elements as dynamically masked.

[rc] Return code; equals `ESMF_SUCCESS` if there are no errors.

29.6.6 ESMF_DynamicMaskSetR4R4R4V - Set DynamicMask for R4R4R4 with vectorization

INTERFACE:

```
subroutine ESMF_DynamicMaskSetR4R4R4V(dynamicMask, dynamicMaskRoutine, &
  handleAllElements, dynamicSrcMaskValue, &
  dynamicDstMaskValue, rc)
```

ARGUMENTS:

```
  type(ESMF_DynamicMask), intent(out)           :: dynamicMask
  procedure(ESMF_DynamicMaskRoutineR4R4R4V)     :: dynamicMaskRoutine
-- The following arguments require argument keyword syntax (e.g. rc=rc). --
  logical,                intent(in),  optional :: handleAllElements
  real(ESMF_KIND_R4),     intent(in),  optional :: dynamicSrcMaskValue
  real(ESMF_KIND_R4),     intent(in),  optional :: dynamicDstMaskValue
  integer,                intent(out), optional :: rc
```

DESCRIPTION:

Set an `ESMF_DynamicMask` object suitable for destination element typekind `ESMF_TYPEKIND_R4`, factor typekind `ESMF_TYPEKIND_R4`, and source element typekind `ESMF_TYPEKIND_R4`.

All values in `dynamicMask` will be reset by this call.

See section 38.2.6 for a general discussion of dynamic masking.

The arguments are:

dynamicMask DynamicMask object.

dynamicMaskRoutine The routine responsible for handling dynamically masked source and destination elements. See section 38.2.6 for the precise definition of the `dynamicMaskRoutine` procedure interface. The routine is only called on PETs where *at least one* interpolation element is identified for special handling.

[handleAllElements] If set to `.true.`, all local elements, regardless of their dynamic masking status, are made available to `dynamicMaskRoutine` for handling. This option can be used to implement fully customized interpolations based on the information provided by ESMF. The default is `.false.`, meaning that only elements affected by dynamic masking will be handed to `dynamicMaskRoutine`.

[dynamicSrcMaskValue] The value for which a source element is considered dynamically masked. The default is to *not* consider any source elements as dynamically masked.

[dynamicDstMaskValue] The value for which a destination element is considered dynamically masked. The default is to *not* consider any destination elements as dynamically masked.

[rc] Return code; equals `ESMF_SUCCESS` if there are no errors.

30 LocalArray Class

30.1 Description

The `ESMF_LocalArray` class provides a language independent representation of data in array format. One of the major functions of the LocalArray class is to bridge the Fortran/C/C++ language difference that exists with respect to array representation. All ESMF Field and Array data is internally stored in ESMF LocalArray objects allowing transparent access from Fortran and C/C++.

In the ESMF Fortran API the LocalArray becomes visible in those cases where a local PET may be associated with multiple pieces of an Array, e.g. if there are multiple DEs associated with a single PET. The Fortran language standard does not provide an array of arrays construct, however arrays of derived types holding arrays are possible. ESMF calls use arguments that are of type `ESMF_LocalArray` with `dimension` attributes where necessary.

30.2 Restrictions and Future Work

- The TKR (type/kind/rank) overloaded LocalArray interfaces declare the dummy Fortran array arguments with the pointer attribute. The advantage of doing this is that it allows ESMF to inquire information about the provided Fortran array. The disadvantage of this choice is that actual Fortran arrays passed into these interfaces *must* also be defined with pointer attribute in the user code.

30.3 Class API

30.3.1 ESMF_LocalArrayAssignment(=) - LocalArray assignment

INTERFACE:

```
interface assignment(=)
localarray1 = localarray2
```

ARGUMENTS:

```
type(ESMF_LocalArray) :: localarray1
type(ESMF_LocalArray) :: localarray2
```

STATUS:

- This interface is backward compatible with ESMF versions starting at 5.2.0r. If code using this interface compiles with any version of ESMF starting with 5.2.0r, then it will compile with the current version.

DESCRIPTION:

Assign localarray1 as an alias to the same ESMF LocalArray object in memory as localarray2. If localarray2 is invalid, then localarray1 will be equally invalid after the assignment.

The arguments are:

localarray1 The `ESMF_LocalArray` object on the left hand side of the assignment.

localarray2 The `ESMF_LocalArray` object on the right hand side of the assignment.

30.3.2 ESMF_LocalArrayOperator(==) - LocalArray equality operator

INTERFACE:

```
interface operator(==)
if (localarray1 == localarray2) then ... endif
OR
result = (localarray1 == localarray2)
```

RETURN VALUE:

```
logical :: result
```

ARGUMENTS:

```
type(ESMF_LocalArray), intent(in) :: localarray1
type(ESMF_LocalArray), intent(in) :: localarray2
```

STATUS:

- This interface is backward compatible with ESMF versions starting at 5.2.0r. If code using this interface compiles with any version of ESMF starting with 5.2.0r, then it will compile with the current version.

DESCRIPTION:

Test whether localarray1 and localarray2 are valid aliases to the same ESMF LocalArray object in memory. For a more general comparison of two ESMF LocalArrays, going beyond the simple alias test, the ESMF_LocalArrayMatch() function (not yet implemented) must be used.

The arguments are:

localarray1 The `ESMF_LocalArray` object on the left hand side of the equality operation.

localarray2 The `ESMF_LocalArray` object on the right hand side of the equality operation.

30.3.3 ESMF_LocalArrayOperator(/=) - LocalArray not equal operator

INTERFACE:

```
interface operator(/=)
if (localarray1 /= localarray2) then ... endif
OR
result = (localarray1 /= localarray2)
```

RETURN VALUE:

```
logical :: result
```

ARGUMENTS:

```
type(ESMF_LocalArray), intent(in) :: localarray1
type(ESMF_LocalArray), intent(in) :: localarray2
```

STATUS:

- This interface is backward compatible with ESMF versions starting at 5.2.0r. If code using this interface compiles with any version of ESMF starting with 5.2.0r, then it will compile with the current version.

DESCRIPTION:

Test whether localarray1 and localarray2 are *not* valid aliases to the same ESMF LocalArray object in memory. For a more general comparison of two ESMF LocalArrays, going beyond the simple alias test, the ESMF_LocalArrayMatch() function (not yet implemented) must be used.

The arguments are:

localarray1 The `ESMF_LocalArray` object on the left hand side of the non-equality operation.

localarray2 The `ESMF_LocalArray` object on the right hand side of the non-equality operation.

30.3.4 ESMF_LocalArrayCreate – Create a LocalArray by explicitly specifying typekind and rank arguments

INTERFACE:

```
! Private name; call using ESMF_LocalArrayCreate()
function ESMF_LocalArrayCreateByTKR(typekind, rank, totalCount, &
  totalLBound, totalUBound, rc)
```

RETURN VALUE:

```
  type(ESMF_LocalArray) :: ESMF_LocalArrayCreateByTKR
```

ARGUMENTS:

```
     type(ESMF_TypeKind_Flag), intent(in) :: typekind
     integer, intent(in) :: rank
 -- The following arguments require argument keyword syntax (e.g. rc=rc). --
     integer, intent(in), optional :: totalCount(:)
     integer, intent(in), optional :: totalLBound(:)
     integer, intent(in), optional :: totalUBound(:)
     integer, intent(out), optional :: rc
```

STATUS:

- This interface is backward compatible with ESMF versions starting at 5.2.0r. If code using this interface compiles with any version of ESMF starting with 5.2.0r, then it will compile with the current version.

DESCRIPTION:

Create a new `ESMF_LocalArray` and allocate data space, which remains uninitialized. The return value is a new LocalArray.

The arguments are:

typekind Array typekind. See section 55.61 for valid values.

rank Array rank (dimensionality, 1D, 2D, etc). Maximum allowed is 7D.

[totalCount] The number of items in each dimension of the array. This is a 1D integer array the same length as the rank. The `count` argument may be omitted if both `totalLBound` and `totalUBound` arguments are present.

[totalLBound] An integer array of length rank, with the lower index for each dimension.

[totalUBound] An integer array of length rank, with the upper index for each dimension.

[rc] Return code; equals `ESMF_SUCCESS` if there are no errors.

30.3.5 ESMF_LocalArrayCreate – Create a LocalArray by specifying an ArraySpec

INTERFACE:

```
! Private name; call using ESMF_LocalArrayCreate()
function ESMF_LocalArrayCreateBySpec(arrayspec, totalCount, &
  totalLBound, totalUBound, rc)
```

RETURN VALUE:

```
     type(ESMF_LocalArray) :: ESMF_LocalArrayCreateBySpec
```

ARGUMENTS:

```
    type(ESMF_ArraySpec), intent(in) :: arrayspec
-- The following arguments require argument keyword syntax (e.g. rc=rc). --
    integer, intent(in), optional :: totalCount(:)
    integer, intent(in), optional :: totalLBound(:)
    integer, intent(in), optional :: totalUBound(:)
    integer, intent(out), optional :: rc
```

STATUS:

- This interface is backward compatible with ESMF versions starting at 5.2.0r. If code using this interface compiles with any version of ESMF starting with 5.2.0r, then it will compile with the current version.

DESCRIPTION:

Create a new `ESMF_LocalArray` and allocate data space, which remains uninitialized. The return value is a new LocalArray.

The arguments are:

arrayspec ArraySpec object specifying typekind and rank.

[totalCount] The number of items in each dimension of the array. This is a 1D integer array the same length as the rank. The `count` argument may be omitted if both `totalLBound` and `totalUBound` arguments are present.

[totalLBound] An integer array of length rank, with the lower index for each dimension.

[totalUBound] An integer array of length rank, with the upper index for each dimension.

[rc] Return code; equals `ESMF_SUCCESS` if there are no errors.

30.3.6 ESMF_LocalArrayCreate – Create a LocalArray from pre-existing LocalArray

INTERFACE:

```
! Private name; call using ESMF_LocalArrayCreate()
function ESMF_LocalArrayCreateCopy(localarray, rc)
```

RETURN VALUE:

```
    type(ESMF_LocalArray) :: ESMF_LocalArrayCreateCopy
```

ARGUMENTS:

```
    type(ESMF_LocalArray), intent(in) :: localarray
-- The following arguments require argument keyword syntax (e.g. rc=rc). --
    integer, intent(out), optional :: rc
```

STATUS:

- This interface is backward compatible with ESMF versions starting at 5.2.0r. If code using this interface compiles with any version of ESMF starting with 5.2.0r, then it will compile with the current version.

DESCRIPTION:

Perform a deep copy of an existing `ESMF_LocalArray` object. The return value is a new LocalArray.

The arguments are:

localarray Existing LocalArray to be copied.

[rc] Return code; equals `ESMF_SUCCESS` if there are no errors.

30.3.7 ESMF_LocalArrayCreate - Create a LocalArray from a Fortran pointer (associated or unassociated)

INTERFACE:

```
! Private name; call using ESMF_LocalArrayCreate()
function ESMF_LocalArrCreateByPtr<rank><type><kind>(farrayPtr, &
datacopyflag, totalCount, totalLBound, totalUBound, rc)
```

RETURN VALUE:

```
type(ESMF_LocalArray) :: ESMF_LocalArrCreateByPtr<rank><type><kind>
```

ARGUMENTS:

```
  <type> (ESMF_KIND_<kind>), pointer :: farrayPtr(<rank>)
-- The following arguments require argument keyword syntax (e.g. rc=rc). --
  type(ESMF_DataCopy_Flag), intent(in), optional :: datacopyflag
  integer, intent(in), optional :: totalCount(:)
  integer, intent(in), optional :: totalLBound(:)
  integer, intent(in), optional :: totalUBound(:)
  integer, intent(out), optional :: rc
```

STATUS:

- This interface is backward compatible with ESMF versions starting at 5.2.0r. If code using this interface compiles with any version of ESMF starting with 5.2.0r, then it will compile with the current version.

DESCRIPTION:

Creates an `ESMF_LocalArray` based on a Fortran array pointer. Two cases must be distinguished.

First, if `farrayPtr` is associated the optional `datacopyflag` argument may be used to indicate whether the associated data is to be copied or referenced. For associated `farrayPtr` the optional `totalCount`, `totalLBound`

and totalUBound arguments need not be specified. However, all present arguments will be checked against farrayPtr for consistency.

Second, if farrayPtr is unassociated the optional argument datacopyflag must not be specified. However, in this case a complete set of totalCount and bounds information must be provided. Any combination of present totalCount totalLBound and totalUBound arguments that provides a complete specification is valid. All input information will be checked for consistency.

The arguments are:

farrayPtr A Fortran array pointer (associated or unassociated).

[datacopyflag] Indicate copy vs. reference behavior in case of associated farrayPtr. This argument must *not* be present for unassociated farrayPtr. Default to ESMF_DATACOPY_REFERENCE, makes the ESMF_LocalArray reference the associated data array. If set to ESMF_DATACOPY_VALUE this routine allocates new memory and copies the data from the pointer into the new LocalArray allocation.

[totalCount] The number of items in each dimension of the array. This is a 1D integer array the same length as the rank. The count argument may be omitted if both totalLBound and totalUBound arguments are present.

[totalLBound] An integer array of lower index values. Must be the same length as the rank.

[totalUBound] An integer array of upper index values. Must be the same length as the rank.

[rc] Return code; equals ESMF_SUCCESS if there are no errors.

30.3.8 ESMF_LocalArrayDestroy - Release resources associated with a LocalArray

INTERFACE:

```
subroutine ESMF_LocalArrayDestroy(localarray, rc)
```

ARGUMENTS:

```
     type(ESMF_LocalArray), intent(inout) :: localarray
 -- The following arguments require argument keyword syntax (e.g. rc=rc). --
     integer, intent(out), optional :: rc
```

STATUS:

- This interface is backward compatible with ESMF versions starting at 5.2.0r. If code using this interface compiles with any version of ESMF starting with 5.2.0r, then it will compile with the current version.

DESCRIPTION:

Destroys an ESMF_LocalArray, releasing all resources associated with the object.

The arguments are:

localarray Destroy contents of this ESMF_LocalArray.

[rc] Return code; equals ESMF_SUCCESS if there are no errors.

30.3.9 ESMF_LocalArrayGet - Get object-wide LocalArray information

INTERFACE:

```
! Private name; call using ESMF_LocalArrayGet()
subroutine ESMF_LocalArrayGetDefault(localarray, &
  typekind, rank, totalCount, totalLBound, totalUBound, isESMFAllocated, rc)
```

ARGUMENTS:

```
  type(ESMF_LocalArray), intent(in) :: localarray
-- The following arguments require argument keyword syntax (e.g. rc=rc). --
  type(ESMF_TypeKind_Flag), intent(out), optional :: typekind
  integer, intent(out), optional :: rank
  integer, intent(out), optional :: totalCount(:)
  integer, intent(out), optional :: totalLBound(:)
  integer, intent(out), optional :: totalUBound(:)
  logical, intent(out), optional :: isESMFAllocated
  integer, intent(out), optional :: rc
```

STATUS:

- This interface is backward compatible with ESMF versions starting at 5.2.0r. If code using this interface compiles with any version of ESMF starting with 5.2.0r, then it will compile with the current version.
- This interface was modified since ESMF version 5.2.0r. The fact that code using this interface compiles with the current ESMF version does not guarantee that it compiles with previous versions of this interface. If user code compatibility with version 5.2.0r is desired then care must be taken to limit the use of this interface to features that were available in the 5.2.0r release.
  Changes made after the 5.2.0r release:

  8.5.0 Added argument `isESMFAllocated` to support user query of whether ESMF or user is responsible for the data allocation referenced by this object.

DESCRIPTION:

Returns information about the `ESMF_LocalArray`.

The arguments are:

localarray Queried `ESMF_LocalArray` object.

[typekind] TypeKind of the LocalArray object.

[rank] Rank of the LocalArray object.

[totalCount] Count per dimension.

[totalLBound] Lower bound per dimension.

[totalUBound] Upper bound per dimension.

[isESMFAllocated] Set to `.true.` for data allocations held by ESMF. Set to `.false.` otherwise.

[rc] Return code; equals `ESMF_SUCCESS` if there are no errors.

30.3.10 ESMF_LocalArrayGet - Get a Fortran array pointer from a LocalArray

INTERFACE:

```
! Private name; call using ESMF_LocalArrayGet()
subroutine ESMF_LocalArrayGetData<rank><type><kind>(localarray, farrayPtr, &
datacopyflag, rc)
```

ARGUMENTS:

```
  type(ESMF_LocalArray) :: localarray
  <type> (ESMF_KIND_<kind>), pointer :: farrayPtr
-- The following arguments require argument keyword syntax (e.g. rc=rc). --
  type(ESMF_DataCopy_Flag), intent(in), optional :: datacopyflag
  integer, intent(out), optional :: rc
```

STATUS:

- This interface is backward compatible with ESMF versions starting at 5.2.0r. If code using this interface compiles with any version of ESMF starting with 5.2.0r, then it will compile with the current version.

DESCRIPTION:

Return a Fortran pointer to the data buffer, or return a Fortran pointer to a new copy of the data.

The arguments are:

localarray The `ESMF_LocalArray` to get the value from.

farrayPtr An unassociated or associated Fortran pointer correctly allocated.

[datacopyflag] An optional copy flag which can be specified. Can either make a new copy of the data or reference existing data. See section 55.13 for a list of possible values.

[rc] Return code; equals `ESMF_SUCCESS` if there are no errors.

30.3.11 ESMF_LocalArrayIsCreated - Check whether a LocalArray object has been created

INTERFACE:

```
function ESMF_LocalArrayIsCreated(localarray, rc)
```

RETURN VALUE:

```
logical :: ESMF_LocalArrayIsCreated
```

ARGUMENTS:

```
     type(ESMF_LocalArray), intent(in) :: localarray
 -- The following arguments require argument keyword syntax (e.g. rc=rc). --
     integer, intent(out), optional :: rc
```

DESCRIPTION:

Return `.true.` if the `localarray` has been created. Otherwise return `.false.`. If an error occurs, i.e. `rc /= ESMF_SUCCESS` is returned, the return value of the function will also be `.false.`.

The arguments are:

localarray `ESMF_LocalArray` queried.

[rc] Return code; equals `ESMF_SUCCESS` if there are no errors.

---

31 ArraySpec Class

31.1 Description

An ArraySpec is a very simple class that contains type, kind, and rank information about an Array. This information is stored in two parameters. **TypeKind** describes the data type of the elements in the Array and their precision. **Rank** is the number of dimensions in the Array.

The only methods that are associated with the ArraySpec class are those that allow you to set and retrieve this information.

31.2 Use and Examples

The ArraySpec is passed in as an argument at Field and FieldBundle creation in order to describe an Array that will be allocated or attached at a later time. There are any number of situations in which this approach is useful. One common example is a case in which the user wants to create a very flexible export State with many diagnostic variables predefined, but only a subset desired and consequently allocated for a particular run.

```
! !PROGRAM: ESMF_ArraySpecEx - ArraySpec manipulation examples
!
! !DESCRIPTION:
!
! This program shows examples of ArraySpec set and get usage
!-----------------------------------------------------------------------------
#include "ESMF.h"

      ! ESMF Framework module
      use ESMF
      use ESMF_TestMod
      implicit none
```

```
! local variables
type(ESMF_ArraySpec) :: arrayDS
integer :: myrank
type(ESMF_TypeKind_Flag) :: mytypekind


! return code
integer:: rc, result
character(ESMF_MAXSTR) :: testname
character(ESMF_MAXSTR) :: failMsg

! initialize ESMF framework
call ESMF_Initialize(defaultlogfilename="ArraySpecEx.Log", &
              logkindflag=ESMF_LOGKIND_MULTI, rc=rc)
```

31.2.1 Set ArraySpec values

This example shows how to set values in an `ESMF_ArraySpec`.

```
call ESMF_ArraySpecSet(arrayDS, rank=2, &
                       typekind=ESMF_TYPEKIND_R8, rc=rc)
```

31.2.2 Get ArraySpec values

This example shows how to query an `ESMF_ArraySpec`.

```
call ESMF_ArraySpecGet(arrayDS, rank=myrank, &
  typekind=mytypekind, rc=rc)
print *, "Returned values from ArraySpec:"
print *, "rank =", myrank

! finalize ESMF framework
call ESMF_Finalize(rc=rc)

end program ESMF_ArraySpecEx
```

31.3 Restrictions and Future Work

1. **Limit on rank.** The values for type, kind and rank passed into the ArraySpec class are subject to the same limitations as Arrays. The maximum array rank is 7, which is the highest rank supported by Fortran.

31.4 Design and Implementation Notes

The information contained in an `ESMF_ArraySpec` is used to create `ESMF_Array` objects.

`ESMF_ArraySpec` is a shallow class, and only set and get methods are needed. They do not need to be created or destroyed.

31.5 Class API

31.5.1 ESMF_ArraySpecAssignment(=) - Assign an ArraySpec to another ArraySpec

INTERFACE:

```
interface assignment(=)
  arrayspec1 = arrayspec2
```

ARGUMENTS:

```
  type(ESMF_ArraySpec) :: arrayspec1
  type(ESMF_ArraySpec) :: arrayspec2
```

STATUS:

- This interface is backward compatible with ESMF versions starting at 5.2.0r. If code using this interface compiles with any version of ESMF starting with 5.2.0r, then it will compile with the current version.

DESCRIPTION:

Set `arrayspec1` equal to `arrayspec2`. This is the default Fortran assignment, which creates a complete, independent copy of `arrayspec2` as `arrayspec1`. If `arrayspec2` is an invalid `ESMF_ArraySpec` object then `arrayspec1` will be equally invalid after the assignment.

The arguments are:

arrayspec1 The `ESMF_ArraySpec` to be set.

arrayspec2 The `ESMF_ArraySpec` to be copied.

31.5.2 ESMF_ArraySpecOperator(==) - Test if ArraySpec 1 is equal to ArraySpec 2

INTERFACE:

```
interface operator(==)
  if (arrayspec1 == arrayspec2) then ... endif
              OR
  result = (arrayspec1 == arrayspec2)
```

RETURN VALUE:

```
logical :: result
```

ARGUMENTS:

```
type(ESMF_ArraySpec), intent(in) :: arrayspec1
type(ESMF_ArraySpec), intent(in) :: arrayspec2
```

STATUS:

- This interface is backward compatible with ESMF versions starting at 5.2.0r. If code using this interface compiles with any version of ESMF starting with 5.2.0r, then it will compile with the current version.

DESCRIPTION:

Overloads the (==) operator for the `ESMF_ArraySpec` class to return `.true.` if `arrayspec1` and `arrayspec2` specify the same type, kind and rank, and `.false.` otherwise.

The arguments are:

arrayspec1 First `ESMF_ArraySpec` in comparison.

arrayspec2 Second `ESMF_ArraySpec` in comparison.

31.5.3 ESMF_ArraySpecOperator(/=) - Test if ArraySpec 1 is not equal to ArraySpec 2

INTERFACE:

```
interface operator(/=)
  if (arrayspec1 /= arrayspec2) then ... endif
              OR
  result = (arrayspec1 /= arrayspec2)
```

RETURN VALUE:

```
logical :: result
```

ARGUMENTS:

```
type(ESMF_ArraySpec), intent(in) :: arrayspec1
type(ESMF_ArraySpec), intent(in) :: arrayspec2
```

STATUS:

- This interface is backward compatible with ESMF versions starting at 5.2.0r. If code using this interface compiles with any version of ESMF starting with 5.2.0r, then it will compile with the current version.

DESCRIPTION:

Overloads the (/=) operator for the `ESMF_ArraySpec` class to return `.true.` if `arrayspec1` and `arrayspec2` do not specify the same type, kind or rank, and `.false.` otherwise.

The arguments are:

arrayspec1 First `ESMF_ArraySpec` in comparison.

arrayspec2 Second `ESMF_ArraySpec` in comparison.

31.5.4 ESMF_ArraySpecGet - Get values from an ArraySpec

INTERFACE:

```
subroutine ESMF_ArraySpecGet(arrayspec, rank, typekind, rc)
```

ARGUMENTS:

```
     type(ESMF_ArraySpec),     intent(in)            :: arrayspec
 -- The following arguments require argument keyword syntax (e.g. rc=rc). --
     integer,                  intent(out), optional :: rank
     type(ESMF_TypeKind_Flag), intent(out), optional :: typekind
     integer,                  intent(out), optional :: rc
```

STATUS:

- This interface is backward compatible with ESMF versions starting at 5.2.0r. If code using this interface compiles with any version of ESMF starting with 5.2.0r, then it will compile with the current version.

DESCRIPTION:

Returns information about the contents of an `ESMF_ArraySpec`.

The arguments are:

arrayspec The `ESMF_ArraySpec` to query.

[rank] Array rank (dimensionality – 1D, 2D, etc). Maximum possible is 7D.

[typekind] Array typekind. See section 55.61 for valid values.

[rc] Return code; equals `ESMF_SUCCESS` if there are no errors.

31.5.5 ESMF_ArraySpecPrint - Print ArraySpec information

INTERFACE:

```
subroutine ESMF_ArraySpecPrint(arrayspec, rc)
```

ARGUMENTS:

```
     type(ESMF_ArraySpec), intent(in)            :: arrayspec
 -- The following arguments require argument keyword syntax (e.g. rc=rc). --
     integer,              intent(out), optional :: rc
```

STATUS:

- This interface is backward compatible with ESMF versions starting at 5.2.0r. If code using this interface compiles with any version of ESMF starting with 5.2.0r, then it will compile with the current version.

DESCRIPTION:

Print ArraySpec internals.

The arguments are:

arrayspec Specified `ESMF_ArraySpec` object.

[rc] Return code; equals `ESMF_SUCCESS` if there are no errors.

31.5.6 ESMF_ArraySpecSet - Set values for an ArraySpec

INTERFACE:

```
subroutine ESMF_ArraySpecSet(arrayspec, rank, typekind, rc)
```

ARGUMENTS:

```
     type(ESMF_ArraySpec),     intent(out)           :: arrayspec
     integer,                  intent(in)            :: rank
     type(ESMF_TypeKind_Flag), intent(in)            :: typekind
 -- The following arguments require argument keyword syntax (e.g. rc=rc). --
     integer,                  intent(out), optional :: rc
```

STATUS:

- This interface is backward compatible with ESMF versions starting at 5.2.0r. If code using this interface compiles with any version of ESMF starting with 5.2.0r, then it will compile with the current version.

DESCRIPTION:

Creates a description of the data – the typekind, the rank, and the dimensionality.

The arguments are:

arrayspec The `ESMF_ArraySpec` to set.

rank Array rank (dimensionality – 1D, 2D, etc). Maximum allowed is 7D.

typekind Array typekind. See section 55.61 for valid values.

[rc] Return code; equals `ESMF_SUCCESS` if there are no errors.

31.5.7 ESMF_ArraySpecValidate - Validate ArraySpec internals

INTERFACE:

```
subroutine ESMF_ArraySpecValidate(arrayspec, rc)
```

ARGUMENTS:

```
     type(ESMF_ArraySpec), intent(in)            :: arrayspec
 -- The following arguments require argument keyword syntax (e.g. rc=rc). --
     integer,              intent(out), optional :: rc
```

STATUS:

- This interface is backward compatible with ESMF versions starting at 5.2.0r. If code using this interface compiles with any version of ESMF starting with 5.2.0r, then it will compile with the current version.

DESCRIPTION:

Validates that the `arrayspec` is internally consistent. The method returns an error code if problems are found.

The arguments are:

arrayspec Specified `ESMF_ArraySpec` object.

[rc] Return code; equals `ESMF_SUCCESS` if there are no errors.

32 Grid Class

32.1 Description

The ESMF Grid class is used to describe the geometry and discretization of logically rectangular physical grids. It also contains the description of the grid's underlying topology and the decomposition of the physical grid across the available computational resources. The most frequent use of the Grid class is to describe physical grids in user code so that sufficient information is available to perform ESMF methods such as regridding.

Key Features
Representation of grids formed by logically rectangular regions, including uniform and rectilinear grids (e.g. lat-lon grids), curvilinear grids (e.g. displaced pole grids), and grids formed by connected logically rectangular regions (e.g. cubed sphere grids).
Support for 1D, 2D, 3D, and higher dimension grids.
Distribution of grids across computational resources for parallel operations - users set which grid dimensions are distributed.
Grids can be created already distributed, so that no single resource needs global information during the creation process.
Options to define periodicity and other edge connectivities either explicitly or implicitly via shape shortcuts.
Options for users to define grid coordinates themselves or to call prefabricated coordinate generation routines for standard grids.
Options for incremental construction of grids.
Options for using a set of pre-defined stagger locations or for setting custom stagger locations.

32.1.1 Grid Representation in ESMF

ESMF Grids are based on the concepts described in *A Standard Description of Grids Used in Earth System Models* [Balaji 2006]. In this document Balaji introduces the mosaic concept as a means of describing a wide variety of Earth system model grids. A **mosaic** is composed of grid tiles connected at their edges. Mosaic grids includes simple, single tile grids as a special case.

The ESMF Grid class is a representation of a mosaic grid. Each ESMF Grid is constructed of one or more logically rectangular **Tiles**. A Tile will usually have some physical significance (e.g. the region of the world covered by one face of a cubed sphere grid).

The piece of a Tile that resides on one DE (for simple cases, a DE can be thought of as a processor - see section on the DELayout) is called a **LocalTile**. For example, the six faces of a cubed sphere grid are each Tiles, and each Tile can be divided into many LocalTiles.

Every ESMF Grid contains a DistGrid object, which defines the Grid's index space, topology, distribution, and connectivities. It enables the user to define the complex edge relationships of tripole and other grids. The DistGrid can be created explicitly and passed into a Grid creation routine, or it can be created implicitly if the user takes a Grid creation shortcut. The DistGrid used in Grid creation describes the properties of the Grid cells. In addition to this one, the Grid internally creates DistGrids for each stagger location. These stagger DistGrids are related to the original DistGrid, but may contain extra padding to represent the extent of the index space of the stagger. These DistGrids are what are used when a Field is created on a Grid.

32.1.2 Supported Grids

The range of supported grids in ESMF can be defined by:

- Types of topologies and shapes supported. ESMF supports one or more logically rectangular grid Tiles with connectivities specified between cells. For more details see section 32.1.3.
- Types of distributions supported. ESMF supports regular, irregular, or arbitrary distributions of data. For more details see section 32.1.4.
- Types of coordinates supported. ESMF supports uniform, rectilinear, and curvilinear coordinates. For more details see section 32.1.5.

32.1.3 Grid Topologies and Periodicity

ESMF has shortcuts for the creation of standard Grid topologies or **shapes** up to 3D. In many cases, these enable the user to bypass the step of creating a DistGrid before creating the Grid. There are two sets of methods which allow the user to do this. These two sets of methods cover the same set of topologies, but allow the user to specify them in different ways.

The first set of these are a group of overloaded calls broken up by the number of periodic dimensions they specify. With these the user can pick the method which creates a Grid with the number of periodic dimensions they need, and then specify other connectivity options via arguments to the method. The following is a description of these methods:

ESMF_GridCreateNoPeriDim() Allows the user to create a Grid with no edge connections, for example, a regional Grid with closed boundaries.

ESMF_GridCreate1PeriDim() Allows the user to create a Grid with 1 periodic dimension and supports a range of options for what to do at the pole (see Section 32.2.5). Some examples of Grids which can be created here are tripole spheres, bipole spheres, cylinders with open poles.

ESMF_GridCreate2PeriDim() Allows the user to create a Grid with 2 periodic dimensions, for example a torus, or a regional Grid with doubly periodic boundaries.

More detailed information can be found in the API description of each.

The second set of shortcut methods is a set of methods overloaded under the name `ESMF_GridCreate()`. These methods allow the user to specify the connectivites at the end of each dimension, by using the ESMF_GridConn_Flag flag. The table below shows the ESMF_GridConn_Flag settings used to create standard shapes in 2D using the ESMF_GridCreate() call. Two values are specified for each dimension, one for the low end and one for the high end of the dimension's index values.

2D Shape	**connflagDim1(1)**	**connflagDim1(2)**	**connflagDim2(1)**	**connflagDim2(2)**
Rectangle	NONE	NONE	NONE	NONE
Bipole Sphere	POLE	POLE	PERIODIC	PERIODIC
Tripole Sphere	POLE	BIPOLE	PERIODIC	PERIODIC
Cylinder	NONE	NONE	PERIODIC	PERIODIC
Torus	PERIODIC	PERIODIC	PERIODIC	PERIODIC

If the user's grid shape is too complex for an ESMF shortcut routine, or involves more than three dimensions, a DistGrid can be created to specify the shape in detail. This DistGrid is then passed into a Grid create call.

32.1.4 Grid Distribution

ESMF Grids have several options for data distribution (also referred to as decomposition). As ESMF Grids are cell based, these options are all specified in terms of how the cells in the Grid are broken up between DEs.

The main distribution options are regular, irregular, and arbitrary. A **regular** distribution is one in which the same number of contiguous grid cells are assigned to each DE in the distributed dimension. An **irregular** distribution is one in which unequal numbers of contiguous grid cells are assigned to each DE in the distributed dimension. An **arbitrary** distribution is one in which any grid cell can be assigned to any DE. Any of these distribution options can be applied to any of the grid shapes (i.e., rectangle) or types (i.e., rectilinear). Support for arbitrary distribution is limited in the current version of ESMF, see Section 32.3.7 for an example of creating a Grid with an arbitrary distribution.

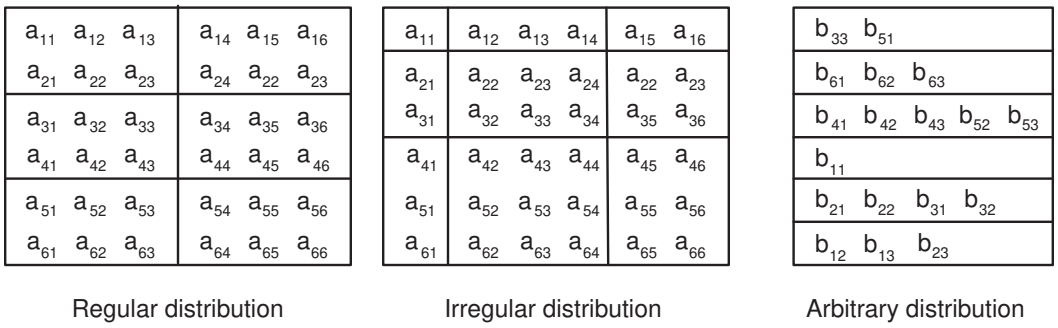

Figure 13: Examples of regular and irregular decomposition of a grid **a** that is 6x6, and an arbitrary decomposition of a grid **b** that is 6x3.

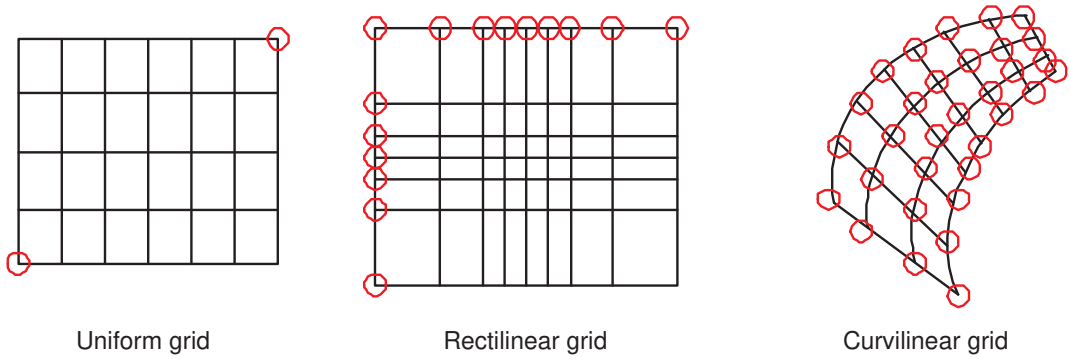

Figure 14: Types of logically rectangular grid tiles. Red circles show the values needed to specify grid coordinates for each type.

Figure 13 illustrates options for distribution.

A distribution can also be specified using the DistGrid, by passing object into a Grid create call.

32.1.5 Grid Coordinates

Grid Tiles can have uniform, rectilinear, or curvilinear coordinates. The coordinates of **uniform** grids are equally spaced along their axes, and can be fully specified by the coordinates of the two opposing points that define the grid's physical span. The coordinates of **rectilinear** grids are unequally spaced along their axes, and can be fully specified by giving the spacing of grid points along each axis. The coordinates of **curvilinear grids** must be specified by giving the explicit set of coordinates for each grid point. Curvilinear grids are often uniform or rectilinear grids that have been warped; for example, to place a pole over a land mass so that it does not affect the computations performed on an ocean model grid. Figure 14 shows examples of each type of grid.

Each of these coordinate types can be set for each of the standard grid shapes described in section 32.1.3.

The table below shows how examples of common single Tile grids fall into this shape and coordinate taxonomy. Note that any of the grids in the table can have a regular or arbitrary distribution.

	Uniform	Rectilinear	Curvilinear
Sphere	Global uniform lat-lon grid	Gaussian grid	Displaced pole grid
Rectangle	Regional uniform lat-lon grid	Gaussian grid section	Polar stereographic grid section

32.1.6 Coordinate Specification and Generation

There are two ways of specifying coordinates in ESMF. The first way is for the user to **set** the coordinates. The second way is to take a shortcut and have the framework **generate** the coordinates.

See Section 32.3.13 for more description and examples of setting coordinates.

32.1.7 Staggering

Staggering is a finite difference technique in which the values of different physical quantities are placed at different locations within a grid cell.

The ESMF Grid class supports a variety of stagger locations, including cell centers, corners, and edge centers. The default stagger location in ESMF is the cell center, and cell counts in Grid are based on this assumption. Combinations of the 2D ESMF stagger locations are sufficient to specify any of the Arakawa staggers. ESMF also supports staggering in 3D and higher dimensions. There are shortcuts for standard staggers, and interfaces through which users can create custom staggers.

As a default the ESMF Grid class provides symmetric staggering, so that cell centers are enclosed by cell perimeter (e.g. corner) stagger locations. This means the coordinate arrays for stagger locations other than the center will have an additional element of padding in order to enclose the cell center locations. However, to achieve other types of staggering, the user may alter or eliminate this padding by using the appropriate options when adding coordinates to a Grid.

In the current release, only the cell center stagger location is supported for an arbitrarily distributed grid. For examples and a full description of the stagger interface see Section 32.3.13.

32.1.8 Masking

Masking is the process whereby parts of a Grid can be marked to be ignored during an operation. For a description of how to set mask information in the Grid, see here 32.3.17. For a description of how masking works in regridding, see here 25.2.10.

32.2 Constants

32.2.1 ESMF_GRIDCONN

DESCRIPTION:

The `ESMF_GridCreateShapeTile` command has three specific arguments `connflagDim1`, `connflagDim2`, and `connflagDim3`. These can be used to setup different types of connections at the ends of each dimension of a Tile. Each of these parameters is a two element array. The first element is the connection type at the minimum end of

the dimension and the second is the connection type at the maximum end. The default value for all the connections is ESMF_GRIDCONN_NONE, specifying no connection.

The type of this flag is:

`type(ESMF_GridConn_Flag)`

The valid values are:

ESMF_GRIDCONN_NONE No connection.

ESMF_GRIDCONN_PERIODIC Periodic connection.

ESMF_GRIDCONN_POLE This edge is connected to itself. Given that the edge is n elements long, then element i is connected to element ((i+n/2) mod n).

ESMF_GRIDCONN_BIPOLE This edge is connected to itself. Given that the edge is n elements long, element i is connected to element n-i+1.

32.2.2 ESMF_GRIDITEM

DESCRIPTION:
The ESMF Grid can contain other kinds of data besides coordinates. This data is referred to as Grid "items". Some items may be used by ESMF for calculations involving the Grid. The following are the valid values of ESMF_GridItem_Flag.

The type of this flag is:

`type(ESMF_GridItem_Flag)`

The valid values are:

Item Label	**Type Restriction**	**Type Default**	**ESMF Uses**	**Controls**
ESMF_GRIDITEM_MASK	ESMF_TYPEKIND_I4	ESMF_TYPEKIND_I4	YES	Masking in Regrid
ESMF_GRIDITEM_AREA	NONE	ESMF_TYPEKIND_R8	YES	Conservation in Regrid

NOTE: One important thing to consider when setting areas in the Grid using `ESMF_GRIDITEM_AREA`, ESMF doesn't currently do unit conversion on areas. If these areas are going to be used in a process that also involves the areas of another Grid or Mesh (e.g. conservative regridding), then it is the user's responsibility to make sure that the area units are consistent between the two sides. If ESMF calculates an area on the surface of a sphere, then it is in units of square radians. If it calculates the area for a Cartesian grid, then it is in the same units as the coordinates, but squared.

32.2.3 ESMF_GRIDMATCH

DESCRIPTION:
This type is used to indicate the level to which two grids match.

The type of this flag is:

`type(ESMF_GridMatch_Flag)`

The valid values are:

ESMF_GRIDMATCH_INVALID: Indicates a non-valid matching level. Returned if an error occurs in the matching function. If a higher matching level is returned then no error occurred.

ESMF_GRIDMATCH_NONE: The lowest level of grid matching. This indicates that the Grid's don't match at any of the higher levels.

ESMF_GRIDMATCH_EXACT: All the pieces of the Grid (e.g. distgrids, coordinates, etc.) except the name, match between the two Grids.

ESMF_GRIDMATCH_ALIAS: Both Grid variables are aliases to the exact same Grid object in memory.

32.2.4 ESMF_GRIDSTATUS

DESCRIPTION:
The ESMF Grid class can exist in two states. These states are present so that the library code can detect if a Grid has been appropriately setup for the task at hand. The following are the valid values of ESMF_GRIDSTATUS.

The type of this flag is:

`type(ESMF_GridStatus_Flag)`

The valid values are:

ESMF_GRIDSTATUS_EMPTY: Status after a Grid has been created with `ESMF_GridEmptyCreate`. A Grid object container is allocated but space for internal objects is not. Topology information and coordinate information is incomplete. This object can be used in `ESMF_GridEmptyComplete()` methods in which additional information is added to the Grid.

ESMF_GRIDSTATUS_COMPLETE: The Grid has a specific topology and distribution, but incomplete coordinate arrays. The Grid can be used as the basis for allocating a Field, and coordinates can be added via `ESMF_GridCoordAdd()` to allow other functionality.

32.2.5 ESMF_POLEKIND

DESCRIPTION:
This type describes the type of connection that occurs at the pole when a Grid is created with `ESMF_GridCreate1PeriodicDim()`.

The type of this flag is:

`type(ESMF_PoleKind_Flag)`

The valid values are:

ESMF_POLEKIND_NONE No connection at pole.

ESMF_POLEKIND_MONOPOLE This edge is connected to itself. Given that the edge is n elements long, then element i is connected to element i+n/2.

ESMF_POLEKIND_BIPOLE This edge is connected to itself. Given that the edge is n elements long, element i is connected to element n-i+1.

32.2.6 ESMF_STAGGERLOC

DESCRIPTION:
In the ESMF Grid class, data can be located at different positions in a Grid cell. When setting or retrieving coordinate

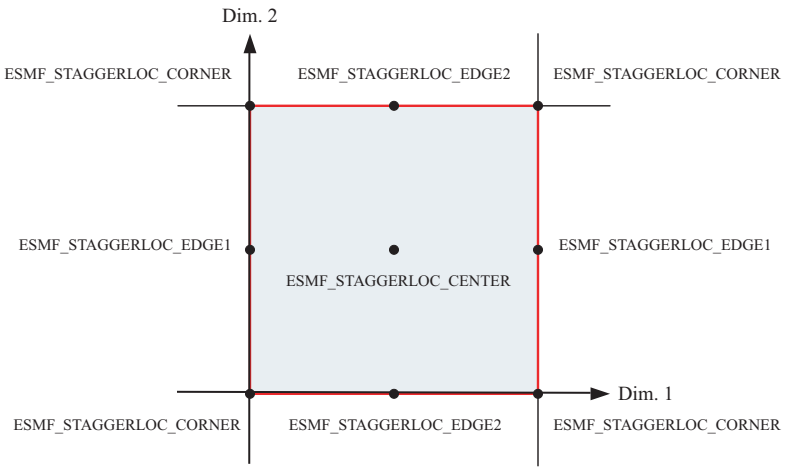

Figure 15: 2D Predefined Stagger Locations

data the stagger location is specified to tell the Grid method from where in the cell to get the data. Although the user may define their own custom stagger locations, ESMF provides a set of predefined locations for ease of use. The following are the valid predefined stagger locations.

The 2D predefined stagger locations (illustrated in figure 15) are:

ESMF_STAGGERLOC_CENTER: The center of the cell.

ESMF_STAGGERLOC_CORNER: The corners of the cell.

ESMF_STAGGERLOC_EDGE1: The edges offset from the center in the 1st dimension.

ESMF_STAGGERLOC_EDGE2: The edges offset from the center in the 2nd dimension.

The 3D predefined stagger locations (illustrated in figure 16) are:

ESMF_STAGGERLOC_CENTER_VCENTER: The center of the 3D cell.

ESMF_STAGGERLOC_CORNER_VCENTER: Half way up the vertical edges of the cell.

ESMF_STAGGERLOC_EDGE1_VCENTER: The center of the face bounded by edge 1 and the vertical dimension.

ESMF_STAGGERLOC_EDGE2_VCENTER: The center of the face bounded by edge 2 and the vertical dimension.

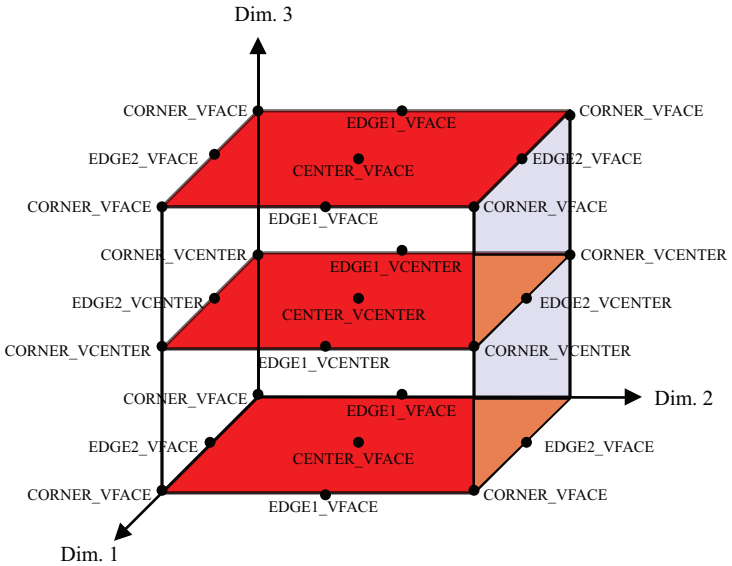

Figure 16: 3D Predefined Stagger Locations

ESMF_STAGGERLOC_CORNER_VFACE: The corners of the 3D cell.

ESMF_STAGGERLOC_EDGE1_VFACE: The center of the edges of the 3D cell parallel offset from the center in the 1st dimension.

ESMF_STAGGERLOC_EDGE2_VFACE: The center of the edges of the 3D cell parallel offset from the center in the 2nd dimension.

ESMF_STAGGERLOC_CENTER_VFACE: The center of the top and bottom face. The face bounded by the 1st and 2nd dimensions.

32.3 Use and Examples

This section describes the use of the ESMF Grid class. It first discusses the more user friendly shape specific interface to the Grid. During this discussion it covers creation and options, adding stagger locations, coordinate data access, and other grid functionality. After this initial phase the document discusses the more advanced options which the user can employ should they need more customized interaction with the Grid class.

32.3.1 Create single-tile Grid shortcut method

The set of methods `ESMF_GridCreateNoPeriDim()`, `ESMF_GridCreate1PeriDim()`, `ESMF_GridCreate2PeriDim()`, and `ESMF_GridCreate()` are shortcuts for building 2D or 3D single tile logically rectangular Grids. These methods support all three types of distributions described in Section 32.1.4: regular, irregular and arbitrary.

The ESMF Grid is cell based and so for all distribution options the methods take as input the number of cells to describe the total index space and the number of cells to specify distribution.

To create a Grid with a regular distribution the user specifies the global maximum and minimum ranges of the Grid cell index space (`maxIndex` and `minIndex`), and the number of pieces in which to partition each dimension (via a `regDecomp` argument). ESMF then divides the index space as evenly as possible into the specified number of pieces. If there are cells left over then they are distributed one per DE starting from the first DE until they are gone.

If `minIndex` is not specified, then the bottom of the Grid cell index range is assumed to be (1,1,...,1). If `regDecomp` is not specified, then by default ESMF creates a distribution that partitions the grid cells in the first dimension (e.g. NPx1x1...1) as evenly as possible by the number of PETs NP. The remaining dimensions are not partitioned. The dimension of the Grid is the size of `maxIndex`. The following is an example of creating a 10x20x30 3D grid where the first dimensions is broken into 2 pieces, the second is broken into 4 pieces, and the third is not divided (i.e. every DE will have length 30 in the 3rd dimension).

```
grid3D=ESMF_GridCreateNoPeriDim(regDecomp=(/2,4,1/), maxIndex=(/10,20,30/), &
         rc=rc)
```

Irregular distribution requires the user to specify the exact number of Grid cells per DE in each dimension. In the `ESMF_GridCreateNoPeriDim()` call the `countsPerDEDim1`, `countsPerDim2`, and `countsPerDim3` arguments are used to specify a rectangular distribution containing size(countsPerDEDim1) by size(countsPerDEDim2) by size(countsPerDEDim3) DEs. The entries in each of these arrays specify the number of grid cells per DE in that dimension. The dimension of the grid is determined by the presence of `countsPerDEDim3`. If it's present the Grid will be 3D. If just `countsPerDEDim1` and `countsPerDEDim2` are specified the Grid will be 2D.

The following call illustrates the creation of a 10x20 two dimensional rectangular Grid distributed across six DEs that are arranged 2x3. In the first dimension there are 3 grid cells on the first DE and 7 cells on the second DE. The second dimension has 3 DEs with 11,2, and 7 cells, respectively.

```
grid2D=ESMF_GridCreateNoPeriDim(countsPerDEDim1=(/3,7/), &
       countsPerDEDim2=(/11,2,7/), rc=rc)
```

To add a distributed third dimension of size 30, broken up into two groups of 15, the above call would be altered as follows.

```
grid3d=ESMF_GridCreateNoPeriDim(countsPerDEDim1=(/3,7/), &
       countsPerDEDim2=(/11,2,7/), countsPerDEDim3=(/15,15/), rc=rc)
```

To make a third dimension distributed across only 1 DE, then `countsPerDEDim3` in the call should only have a single term.

```
grid3D=ESMF_GridCreateNoPeriDim(countsPerDEDim1=(/3,7/),  &
       countsPerDEDim2=(/11,2,7/), countsPerDEDim3=(/30/), rc=rc)
```

The `petMap` parameter may be used to specify on to which specific PETs the DEs in the Grid are assigned. Each entry in `petMap` specifies to which PET the corresponding DE should be assigned. For example, `petMap(3,2)=4` tells the Grid create call to put the DE located at column 3 row 2 on PET 4. Note that this parameter is only available for the regular and irregular distribution types. The `petMap` array is a 3D array, for a 3D Grid each of its dimensions correspond to a Grid dimension. If the Grid is 2D, then the first two dimensions correspond to Grid dimensions and the last dimension should be of size 1. The size of each `petMap` dimension is the number of DE's along that dimension in the Grid. For a regular Grid, the size is equal to the number in regDecomp (i.e. `size(petMap,d)=regDecomp(d)`

for all dimensions d in the Grid). For an irregular Grid the size is equal to the number of items in the corresponding countsPerDEDim variable (i.e. size(petMap,d)=size(countsPerDEDimd) for all dimensions d in the Grid). The following example demonstrates how to specify the PET to DE association for an ESMF_GridCreateNoPeriDim() call.

```
! allocate memory for petMap
allocate( petMap(2,2,1) )

! Set petMap
petMap(:,1,1) = (/3,2/) ! DE (1,1,1) on PET 3 and DE (2,1,1) on PET 2
petMap(:,2,1) = (/1,0/) ! DE (1,2,1) on PET 1 and DE (2,2,1) on PET 0


! Let the 3D grid be be distributed only in the first two dimensions.
grid2D=ESMF_GridCreateNoPeriDim(countsPerDEDim1=(/3,7/), &
        countsPerDEDim2=(/7,6/), petMap=petMap, rc=rc)
```

To create an grid with arbitrary distribution, the user specifies the global minimum and maximum ranges of the index space with the arguments minIndex and maxIndex, the total number of cells and their index space locations residing on the local PET through a localArbIndexCount and a localArbIndex argument. localArbIndex is a 2D array with size (localArbIndexCount, n) where n is the total number dimensions distributed arbitrarily. Again, if minIndex is not specified, then the bottom of the index range is assumed to be (1,1,...). The dimension of the Grid is equal to the size of maxIndex. If n (number of arbitrarily distributed dimension) is less than the grid dimension, an optional argument distDim is used to specify which of the grid dimension is arbitrarily distributed. If not given, the first n dimensions are assumed to be distributed.

The following example creates a 2D Grid of dimensions 5x5, and places the diagonal elements (i.e. indices (i,i) where i goes from 1 to 5) on the local PET. The remaining PETs would individually declare the remainder of the Grid locations.

```
! allocate memory for localArbIndex
allocate( localArbIndex(5,2) )
! Set local indices
localArbIndex(1,:)=(/1,1/)
localArbIndex(2,:)=(/2,2/)
localArbIndex(3,:)=(/3,3/)
localArbIndex(4,:)=(/4,4/)
localArbIndex(5,:)=(/5,5/)

! Create a 2D Arbitrarily distributed Grid
grid2D=ESMF_GridCreateNoPeriDim(maxIndex=(/5,5/), &
      arbIndexList=localArbIndex, arbIndexCount=5, rc=rc)
```

To create a 3D Grid of dimensions 5x6x5 with the first and the third dimensions distributed arbitrarily, distDim is used.

```
! Create a 3D Grid with the 1st and 3rd dimension arbitrarily distributed
grid3D=ESMF_GridCreateNoPeriDim(maxIndex=(/5,6,5/), &
      arbIndexList=localArbIndex, arbIndexCount=5, &
      distDim=(/1,3/), rc=rc)
```

32.3.2 Create a 2D regularly distributed rectilinear Grid with uniformly spaced coordinates

The following is an example of creating a simple rectilinear grid and loading in a set of coordinates. It illustrates a straightforward use of the `ESMF_GridCreateNoPeriDim()` call described in the previous section. This code creates a 10x20 2D grid with uniformly spaced coordinates varying from (10,10) to (100,200). The grid is partitioned using a regular distribution. The first dimension is divided into two pieces, and the second dimension is divided into 3. This example assumes that the code is being run with a 1-1 mapping between PETs and DEs because we are only accessing the first DE on each PET (localDE=0). Because we have 6 DEs (2x3), this example would only work when run on 6 PETs. The Grid is created with global indices. After Grid creation the local bounds and native Fortran arrays are retrieved and the coordinates are set by the user.

```
!-----------------------------------------------------------------
! Create the Grid:  Allocate space for the Grid object, define the
! topology and distribution of the Grid, and specify that it
! will have global indices.  Note that here aperiodic bounds are
! specified by the argument name. In this call the minIndex hasn't
! been set, so it defaults to (1,1,...). The default is to
! divide the index range as equally as possible among the DEs
! specified in regDecomp. This behavior can be changed by
! specifying decompFlag.
!-----------------------------------------------------------------
grid2D=ESMF_GridCreateNoPeriDim(          &
      ! Define a regular distribution
      maxIndex=(/10,20/), & ! define index space
      regDecomp=(/2,3/),  & ! define how to divide among DEs
      coordSys=ESMF_COORDSYS_CART, &
      ! Specify mapping of coords dim to Grid dim
      coordDep1=(/1/), & ! 1st coord is 1D and depends on 1st Grid dim
      coordDep2=(/2/), & ! 2nd coord is 1D and depends on 2nd Grid dim
      indexflag=ESMF_INDEX_GLOBAL, &
      rc=rc)


!-----------------------------------------------------------------
! Allocate coordinate storage and associate it with the center
! stagger location.  Since no coordinate values are specified in
! this call no coordinate values are set yet.
!-----------------------------------------------------------------
call ESMF_GridAddCoord(grid2D,  &
       staggerloc=ESMF_STAGGERLOC_CENTER, rc=rc)



!-----------------------------------------------------------------
! Get the pointer to the first coordinate array and the bounds
! of its global indices on the local DE.
!-----------------------------------------------------------------
call ESMF_GridGetCoord(grid2D, coordDim=1, localDE=0, &
       staggerloc=ESMF_STAGGERLOC_CENTER, &
       computationalLBound=lbnd, computationalUBound=ubnd, &
       farrayPtr=coordX, rc=rc)


!-----------------------------------------------------------------
```

```
! Calculate and set coordinates in the first dimension [10-100].
!-------------------------------------------------------------------
do i=lbnd(1),ubnd(1)
     coordX(i) = i*10.0
enddo

!-------------------------------------------------------------------
! Get the pointer to the second coordinate array and the bounds of
! its global indices on the local DE.
!-------------------------------------------------------------------
call ESMF_GridGetCoord(grid2D, coordDim=2, localDE=0, &
       staggerloc=ESMF_STAGGERLOC_CENTER, &
       computationalLBound=lbnd, computationalUBound=ubnd, &
       farrayPtr=coordY, rc=rc)



!-------------------------------------------------------------------
! Calculate and set coordinates in the second dimension [10-200]
!-------------------------------------------------------------------
do j=lbnd(1),ubnd(1)
     coordY(j) = j*10.0
enddo
```

32.3.3 Create a periodic 2D regularly distributed rectilinear Grid

The following is an example of creating a simple rectilinear grid with a periodic dimension and loading in a set of coordinates. It illustrates a straightforward use of the `ESMF_GridCreate1PeriDim()` call described in the previous section. This code creates a 360x180 2D grid with uniformly spaced coordinates varying from (1,1) to (360,180). The grid is partitioned using a regular distribution. The first dimension is divided into two pieces, and the second dimension is divided into 3. This example assumes that the code is being run with a 1-1 mapping between PETs and DEs because we are only accessing the first DE on each PET (localDE=0). Because we have 6 DEs (2x3), this example would only work when run on 6 PETs. The Grid is created with global indices. After Grid creation the local bounds and native Fortran arrays are retrieved and the coordinates are set by the user.

```
!-------------------------------------------------------------------
! Create the Grid:  Allocate space for the Grid object, define the
! topology and distribution of the Grid, and specify that it
! will have global indices.  Note that here a single periodic connection
! is specified by the argument name. In this call the minIndex hasn't
! been set, so it defaults to (1,1,...). The default is to
! divide the index range as equally as possible among the DEs
! specified in regDecomp. This behavior can be changed by
! specifying decompFlag. Since the coordinate system is
! not specified, it defaults to ESMF_COORDSYS_SPH_DEG.
!-------------------------------------------------------------------
grid2D=ESMF_GridCreate1PeriDim(          &
      ! Define a regular distribution
      maxIndex=(/360,180/), & ! define index space
      regDecomp=(/2,3/),  & ! define how to divide among DEs
      ! Specify mapping of coords dim to Grid dim
      coordDep1=(/1/), & ! 1st coord is 1D and depends on 1st Grid dim
      coordDep2=(/2/), & ! 2nd coord is 1D and depends on 2nd Grid dim
      indexflag=ESMF_INDEX_GLOBAL, &
```

```
      rc=rc)


!-----------------------------------------------------------------
! Allocate coordinate storage and associate it with the center
! stagger location.  Since no coordinate values are specified in
! this call no coordinate values are set yet.
!-----------------------------------------------------------------
call ESMF_GridAddCoord(grid2D,  &
       staggerloc=ESMF_STAGGERLOC_CENTER, rc=rc)



!-----------------------------------------------------------------
! Get the pointer to the first coordinate array and the bounds
! of its global indices on the local DE.
!-----------------------------------------------------------------
call ESMF_GridGetCoord(grid2D, coordDim=1, localDE=0, &
       staggerloc=ESMF_STAGGERLOC_CENTER, &
       computationalLBound=lbnd, computationalUBound=ubnd, &
       farrayPtr=coordX, rc=rc)



!-----------------------------------------------------------------
! Calculate and set coordinates in the first dimension [10-100].
!-----------------------------------------------------------------
do i=lbnd(1),ubnd(1)
     coordX(i) = i*1.0
enddo

!-----------------------------------------------------------------
! Get the pointer to the second coordinate array and the bounds of
! its global indices on the local DE.
!-----------------------------------------------------------------
call ESMF_GridGetCoord(grid2D, coordDim=2, localDE=0, &
       staggerloc=ESMF_STAGGERLOC_CENTER, &
       computationalLBound=lbnd, computationalUBound=ubnd, &
       farrayPtr=coordY, rc=rc)



!-----------------------------------------------------------------
! Calculate and set coordinates in the second dimension [10-200]
!-----------------------------------------------------------------
do j=lbnd(1),ubnd(1)
     coordY(j) = j*1.0
enddo
```

The remaining examples in this section will use the irregular distribution because of its greater generality. To create code similar to these, but using a regular distribution, replace the `countsPerDEDim` arguments in the Grid create with the appropriate `maxIndex` and `regDecomp` arguments.

32.3.4 Create a 2D irregularly distributed rectilinear Grid with uniformly spaced coordinates

This example serves as an illustration of the difference between using a regular and irregular distribution. It repeats the previous example except using an irregular distribution to give the user more control over how the cells are divided between the DEs. As before, this code creates a 10x20 2D Grid with uniformly spaced coordinates varying from (10,10) to (100,200). In this example, the Grid is partitioned using an irregular distribution. The first dimension is divided into two pieces, the first with 3 Grid cells per DE and the second with 7 Grid cells per DE. In the second dimension, the Grid is divided into 3 pieces, with 11, 2, and 7 cells per DE respectively. This example assumes that the code is being run with a 1-1 mapping between PETs and DEs because we are only accessing the first DE on each PET (localDE=0). Because we have 6 DEs (2x3), this example would only work when run on 6 PETs. The Grid is created with global indices. After Grid creation the local bounds and native Fortran arrays are retrieved and the coordinates are set by the user.

```
!------------------------------------------------------------------
! Create the Grid:  Allocate space for the Grid object, define the
! topology and distribution of the Grid, and specify that it
! will have global coordinates.  Note that aperiodic bounds are
! indicated by the method name. In this call the minIndex hasn't
! been set, so it defaults to (1,1,...).
!------------------------------------------------------------------
grid2D=ESMF_GridCreateNoPeriDim(          &
         ! Define an irregular distribution
         countsPerDEDim1=(/3,7/),    &
         countsPerDEDim2=(/11,2,7/), &
         ! Specify mapping of coords dim to Grid dim
         coordDep1=(/1/), & ! 1st coord is 1D and depends on 1st Grid dim
         coordDep2=(/2/), & ! 2nd coord is 1D and depends on 2nd Grid dim
         indexflag=ESMF_INDEX_GLOBAL, &
         rc=rc)



!------------------------------------------------------------------
! Allocate coordinate storage and associate it with the center
! stagger location.  Since no coordinate values are specified in
! this call no coordinate values are set yet.
!------------------------------------------------------------------
call ESMF_GridAddCoord(grid2D,  &
       staggerloc=ESMF_STAGGERLOC_CENTER, rc=rc)


!------------------------------------------------------------------
! Get the pointer to the first coordinate array and the bounds
! of its global indices on the local DE.
!------------------------------------------------------------------
call ESMF_GridGetCoord(grid2D, coordDim=1, localDE=0, &
       staggerloc=ESMF_STAGGERLOC_CENTER, &
       computationalLBound=lbnd, computationalUBound=ubnd, &
       farrayPtr=coordX, rc=rc)


!------------------------------------------------------------------
! Calculate and set coordinates in the first dimension [10-100].
!------------------------------------------------------------------
```

```
do i=lbnd(1),ubnd(1)
     coordX(i) = i*10.0
enddo

!-------------------------------------------------------------------
! Get the pointer to the second coordinate array and the bounds of
! its global indices on the local DE.
!-------------------------------------------------------------------
call ESMF_GridGetCoord(grid2D, coordDim=2, localDE=0, &
       staggerloc=ESMF_STAGGERLOC_CENTER, &
       computationalLBound=lbnd, computationalUBound=ubnd, &
       farrayPtr=coordY, rc=rc)



!-------------------------------------------------------------------
! Calculate and set coordinates in the second dimension [10-200]
!-------------------------------------------------------------------
do j=lbnd(1),ubnd(1)
     coordY(j) = j*10.0
enddo
```

32.3.5 Create a 2D irregularly distributed Grid with curvilinear coordinates

The following is an example of creating a simple curvilinear Grid and loading in a set of coordinates. It creates a 10x20 2D Grid where the coordinates vary along every dimension. The Grid is partitioned using an irregular distribution. The first dimension is divided into two pieces, the first with 3 Grid cells per DE and the second with 7 Grid cells per DE. In the second dimension, the Grid is divided into 3 pieces, with 11, 2, and 7 cells per DE respectively. This example assumes that the code is being run with a 1-1 mapping between PETs and DEs because we are only accessing the first DE on each PET (localDE=0). Because we have 6 DEs (2x3), this example would only work when run on 6 PETs. The Grid is created with global indices. After Grid creation the local bounds and native Fortran arrays are retrieved and the coordinates are set by the user.

```
!-------------------------------------------------------------------
! Create the Grid:  Allocate space for the Grid object, define the
! distribution of the Grid, and specify that it
! will have global indices.  Note that aperiodic bounds are
! indicated by the method name. If periodic bounds were desired they
! could be specified by using the ESMF_GridCreate1PeriDim() call.
! In this call the minIndex hasn't been set, so it defaults to (1,1,...).
!-------------------------------------------------------------------
grid2D=ESMF_GridCreateNoPeriDim(      &
     ! Define an irregular distribution
     countsPerDEDim1=(/3,7/),     &
     countsPerDEDim2=(/11,2,7/),   &
     ! Specify mapping of coords dim to Grid dim
     coordDep1=(/1,2/), & ! 1st coord is 2D and depends on both Grid dim
     coordDep2=(/1,2/), & ! 2nd coord is 2D and depends on both Grid dim
     indexflag=ESMF_INDEX_GLOBAL, &
     rc=rc)
```

```
!-----------------------------------------------------------------
! Allocate coordinate storage and associate it with the center
! stagger location.  Since no coordinate values are specified in
! this call no coordinate values are set yet.
!-----------------------------------------------------------------
call ESMF_GridAddCoord(grid2D,  &
       staggerloc=ESMF_STAGGERLOC_CENTER, rc=rc)



!-----------------------------------------------------------------
! Get the pointer to the first coordinate array and the bounds
! of its global indices on the local DE.
!-----------------------------------------------------------------
call ESMF_GridGetCoord(grid2D, coordDim=1, localDE=0, &
       staggerloc=ESMF_STAGGERLOC_CENTER, &
       computationalLBound=lbnd, computationalUBound=ubnd, &
       farrayPtr=coordX2D, rc=rc)



!-----------------------------------------------------------------
! Calculate and set coordinates in the first dimension [10-100].
!-----------------------------------------------------------------
do j=lbnd(2),ubnd(2)
do i=lbnd(1),ubnd(1)
     coordX2D(i,j) = i+j
enddo
enddo

!-----------------------------------------------------------------
! Get the pointer to the second coordinate array and the bounds of
! its global indices on the local DE.
!-----------------------------------------------------------------
call ESMF_GridGetCoord(grid2D, coordDim=2, localDE=0, &
       staggerloc=ESMF_STAGGERLOC_CENTER, &
       computationalLBound=lbnd, computationalUBound=ubnd, &
       farrayPtr=coordY2D, rc=rc)



!-----------------------------------------------------------------
! Calculate and set coordinates in the second dimension [10-200]
!-----------------------------------------------------------------
do j=lbnd(2),ubnd(2)
do i=lbnd(1),ubnd(1)
     coordY2D(i,j) = j-i/100.0
enddo
enddo
```

32.3.6 Create an irregularly distributed rectilinear Grid with a non-distributed vertical dimension

This example demonstrates how a user can build a rectilinear horizontal Grid with a non-distributed vertical dimension. The Grid contains both the center and corner stagger locations (i.e. Arakawa B-Grid). In contrast to the previous

examples, this example doesn't assume that the code is being run with a 1-1 mapping between PETs and DEs. It should work when run on any number of PETs.

```
!-----------------------------------------------------------------
! Create the Grid:  Allocate space for the Grid object.  The
! Grid is defined to be 180 Grid cells in the first dimension
! (e.g. longitude), 90 Grid cells in the second dimension
! (e.g. latitude), and 40 Grid cells in the third dimension
! (e.g. height).  The first dimension is decomposed over 4 DEs,
! the second over 3 DEs, and the third is not distributed.
! The connectivities in each dimension are set to aperiodic
! by this method. In this call the minIndex hasn't been set,
! so it defaults to (1,1,...).
!-----------------------------------------------------------------
grid3D=ESMF_GridCreateNoPeriDim( &
         ! Define an irregular distribution
         countsPerDEDim1=(/45,75,40,20/), &
         countsPerDEDim2=(/30,40,20/),    &
         countsPerDEDim3=(/40/),          &
         ! Specify mapping of coords dim to Grid dim
         coordDep1=(/1/), & ! 1st coord is 1D and depends on 1st Grid dim
         coordDep2=(/2/), & ! 2nd coord is 1D and depends on 2nd Grid dim
         coordDep3=(/3/), & ! 3rd coord is 1D and depends on 3rd Grid dim
         indexflag=ESMF_INDEX_GLOBAL,     & ! Use global indices
         rc=rc)



!-----------------------------------------------------------------
! Allocate coordinate storage for both center and corner stagger
! locations.  Since no coordinate values are specified in this
! call no coordinate values are set yet.
!-----------------------------------------------------------------
call ESMF_GridAddCoord(grid3D, &
       staggerloc=ESMF_STAGGERLOC_CENTER_VCENTER, rc=rc)


call ESMF_GridAddCoord(grid3D, &
       staggerloc=ESMF_STAGGERLOC_CORNER_VCENTER, rc=rc)



!-----------------------------------------------------------------
! Get the number of DEs on this PET, so that the program
! can loop over them when accessing data.
!-----------------------------------------------------------------
call ESMF_GridGet(grid3D, localDECount=localDECount, rc=rc)



!-----------------------------------------------------------------
```

```
! Loop over each localDE when accessing data
!-----------------------------------------------------------------
do lDE=0,localDECount-1

 !-----------------------------------------------------------------
 ! Fill in the coordinates for the corner stagger location first.
 !-----------------------------------------------------------------
   !-----------------------------------------------------------------
   ! Get the local bounds of the global indexing for the first
   ! coordinate array on the local DE. If the number of PETs
   ! is less than the total number of DEs then the rest of this
   ! example would be in a loop over the local DEs.  Also get the
   ! pointer to the first coordinate array.
   !-----------------------------------------------------------------
   call ESMF_GridGetCoord(grid3D, coordDim=1, localDE=lDE, &
          staggerLoc=ESMF_STAGGERLOC_CORNER_VCENTER,       &
          computationalLBound=lbnd_corner,                 &
          computationalUBound=ubnd_corner,                 &
          farrayPtr=cornerX, rc=rc)



   !-----------------------------------------------------------------
   ! Calculate and set coordinates in the first dimension.
   !-----------------------------------------------------------------
   do i=lbnd_corner(1),ubnd_corner(1)
      cornerX(i) = (i-1)*(360.0/180.0)
   enddo

   !-----------------------------------------------------------------
   ! Get the local bounds of the global indexing for the second
   ! coordinate array on the local DE.  Also get the pointer to the
   ! second coordinate array.
   !-----------------------------------------------------------------
   call ESMF_GridGetCoord(grid3D, coordDim=2, localDE=lDE,   &
          staggerLoc=ESMF_STAGGERLOC_CORNER_VCENTER,         &
          computationalLBound=lbnd_corner,                   &
          computationalUBound=ubnd_corner,                   &
          farrayPtr=cornerY, rc=rc)



   !-----------------------------------------------------------------
   ! Calculate and set coordinates in the second dimension.
   !-----------------------------------------------------------------
   do j=lbnd_corner(1),ubnd_corner(1)
      cornerY(j) = (j-1)*(180.0/90.0)
   enddo

   !-----------------------------------------------------------------
   ! Get the local bounds of the global indexing for the third
   ! coordinate array on the local DE, and the pointer to the array.
   !-----------------------------------------------------------------
   call ESMF_GridGetCoord(grid3D, coordDim=3, localDE=lDE,   &
          staggerloc=ESMF_STAGGERLOC_CENTER_VCENTER,         &
```

```
        computationalLBound=lbnd, computationalUBound=ubnd,&
        farrayPtr=cornerZ, rc=rc)



  !-----------------------------------------------------------------
  ! Calculate and set the vertical coordinates
  !-----------------------------------------------------------------
  do k=lbnd(1),ubnd(1)
     cornerZ(k) = 4000.0*( (1./39.)*(k-1)  )**2
  enddo

!-------------------------------------------------------------------
! Now fill the coordinates for the center stagger location with
! the average of the corner coordinate location values.
!-------------------------------------------------------------------
  !-----------------------------------------------------------------
  ! Get the local bounds of the global indexing for the first
  ! coordinate array on the local DE, and the pointer to the array.
  !-----------------------------------------------------------------
  call ESMF_GridGetCoord(grid3D, coordDim=1, localDE=lDE,    &
        staggerloc=ESMF_STAGGERLOC_CENTER_VCENTER,          &
        computationalLBound=lbnd, computationalUBound=ubnd, &
        farrayPtr=centerX, rc=rc)



  !-----------------------------------------------------------------
  ! Calculate and set coordinates in the first dimension.
  !-----------------------------------------------------------------
  do i=lbnd(1),ubnd(1)
     centerX(i) = 0.5*(i-1 + i)*(360.0/180.0)
  enddo

  !-----------------------------------------------------------------
  ! Get the local bounds of the global indexing for the second
  ! coordinate array on the local DE, and the pointer to the array.
  !-----------------------------------------------------------------
   call ESMF_GridGetCoord(grid3D, coordDim=2, localDE=lDE,    &
         staggerloc=ESMF_STAGGERLOC_CENTER_VCENTER,          &
         computationalLBound=lbnd, computationalUBound=ubnd, &
         farrayPtr=centerY, rc=rc)



  !-----------------------------------------------------------------
  ! Calculate and set coordinates in the second dimension.
  !-----------------------------------------------------------------
  do j=lbnd(1),ubnd(1)
     centerY(j) = 0.5*(j-1 + j)*(180.0/90.0)
  enddo

  !-----------------------------------------------------------------
  ! Get the local bounds of the global indexing for the third
```

```
   ! coordinate array on the local DE, and the pointer to the array.
   !-----------------------------------------------------------------
   call ESMF_GridGetCoord(grid3D, coordDim=3, localDE=lDE,   &
          staggerloc=ESMF_STAGGERLOC_CENTER_VCENTER,         &
          computationalLBound=lbnd, computationalUBound=ubnd,&
          farrayPtr=centerZ, rc=rc)



   !-----------------------------------------------------------------
   ! Calculate and set the vertical coordinates
   !-----------------------------------------------------------------
   do k=lbnd(1),ubnd(1)
      centerZ(k) = 4000.0*( (1./39.)*(k-1)  )**2
   enddo

!-------------------------------------------------------------------
! End of loop over DEs
!-------------------------------------------------------------------
enddo
```

32.3.7 Create an arbitrarily distributed rectilinear Grid with a non-distributed vertical dimension

There are more restrictions in defining an arbitrarily distributed grid. First, there is always one DE per PET. Secondly, only local index (`ESMF_INDEX_LOCAL`) is supported. Third, only one stagger location, i.e. `ESMF_STAGGERLOC_CENTER` is allowed and last there is no extra paddings on the edge of the grid.

This example demonstrates how a user can build a 3D grid with its rectilinear horizontal Grid distributed arbitrarily and a non-distributed vertical dimension.

```
!-------------------------------------------------------------------
! Set up the local index array:  Assuming the grid is 360x180x10.  First
! calculate the localArbIndexCount and localArbIndex array for each PET
! based on the total number of PETs. The cells are evenly distributed in
! all the PETs. If the total number of cells are not divisible by the
! total PETs, the remaining cells are assigned to the last PET.  The
! cells are card dealt to each PET in y dimension first,
! i.e. (1,1) -> PET 0, (1,2)->  PET 1, (1,3)-> PET 2, and so forth.
!-------------------------------------------------------------------
xdim = 360
ydim = 180
zdim = 10
localArbIndexCount = (xdim*ydim)/petCount
remain = (xdim*ydim)-localArbIndexCount*petCount
if (localPet == petCount-1) localArbIndexCount = localArbIndexCount+remain

allocate(localArbIndex(localArbIndexCount,2))
ind = localPet
do i=1, localArbIndexCount
   localArbIndex(i,1)=mod(ind,ydim)+1
   localArbIndex(i,2)=ind/ydim + 1
   ind = ind + petCount
```

```
enddo
if (localPet == petCount-1) then
   ind = xdim*ydim-remain+1
   do i=localArbIndexCount-remain+1,localArbIndexCount
      localArbIndex(i,1)=mod(ind,ydim)+1
      localArbIndex(i,2)=ind/ydim+1
      ind = ind + 1
   enddo
endif

!-------------------------------------------------------------------
! Create the Grid:  Allocate space for the Grid object.
! the minIndex hasn't been set, so it defaults to (1,1,...). The
! default coordDep1 and coordDep2 are (/ESMF_DIM_ARB/) where
! ESMF_DIM_ARB represents the collapsed dimension for the
! arbitrarily distributed grid dimensions.  For the undistributed
! grid dimension, the default value for coordDep3 is (/3/).  The
! default values for coordDepX in the arbitrary distribution are
! different from the non-arbitrary distributions.
!-------------------------------------------------------------------
grid3D=ESMF_GridCreateNoPeriDim( &
         maxIndex = (/xdim, ydim, zdim/), &
         arbIndexList = localArbIndex, &
         arbIndexCount = localArbIndexCount, &
         rc=rc)



!-------------------------------------------------------------------
! Allocate coordinate storage for the center stagger location, the
! only stagger location supported for the arbitrary distribution.
!-------------------------------------------------------------------
call ESMF_GridAddCoord(grid3D, &
       staggerloc=ESMF_STAGGERLOC_CENTER_VCENTER, rc=rc)



!-------------------------------------------------------------------
! Fill in the coordinates for the center stagger location. There is
! always one DE per PET, so localDE is always 0
!-------------------------------------------------------------------
call ESMF_GridGetCoord(grid3D, coordDim=1, localDE=0, &
       staggerLoc=ESMF_STAGGERLOC_CENTER,       &
       computationalLBound=lbnd,                 &
       computationalUBound=ubnd,                 &
       farrayPtr=centerX, rc=rc)



!-------------------------------------------------------------------
! Calculate and set coordinates in the first dimension.
!-------------------------------------------------------------------
do i=lbnd(1),ubnd(1)
```

```
   centerX(i) = (localArbIndex(i,1)-0.5)*(360.0/xdim)
enddo


!-----------------------------------------------------------------
! Get the local bounds of the global indexing for the second
! coordinate array on the local DE, and the pointer to the array.
!-----------------------------------------------------------------
call ESMF_GridGetCoord(grid3D, coordDim=2, localDE=0,    &
       staggerloc=ESMF_STAGGERLOC_CENTER,                  &
       computationalLBound=lbnd, computationalUBound=ubnd, &
       farrayPtr=centerY, rc=rc)



!-----------------------------------------------------------------
! Calculate and set coordinates in the second dimension.
!-----------------------------------------------------------------
do j=lbnd(1),ubnd(1)
   centerY(j) = (localArbIndex(j,2)-0.5)*(180.0/ydim)-90.0
enddo

!-----------------------------------------------------------------
! Get the local bounds of the global indexing for the third
! coordinate array on the local DE, and the pointer to the array.
!-----------------------------------------------------------------
call ESMF_GridGetCoord(grid3D, coordDim=3, localDE=0,   &
       staggerloc=ESMF_STAGGERLOC_CENTER,               &
       computationalLBound=lbnd, computationalUBound=ubnd,&
       farrayPtr=centerZ, rc=rc)



!-----------------------------------------------------------------
! Calculate and set the vertical coordinates
!-----------------------------------------------------------------
do k=lbnd(1),ubnd(1)
   centerZ(k) = 4000.0*( (1./zdim)*(k-1))**2
enddo
```

32.3.8 Create a curvilinear Grid using the coordinates defined in a SCRIP file

ESMF supports the creation of a 2D curvilinear Grid using the coordinates defined in a SCRIP format Grid file [13]. The grid contained in the file must be a 2D logically rectangular grid with `grid_rank` in the file set to 2. The center coordinates variables `grid_center_lat` and `grid_center_lon` in the file are placed in the ESMF_STAGGERLOC_CENTER location. If the parameter `addCornerStagger` in the `ESMF_GridCreate` call is set to .true., then the variables `grid_corner_lat` and `grid_corner_lon` in the file are used to set the ESMF_STAGGERLOC_CORNER coordinates, otherwise they are ignored. The values in the `grid_imask` variable in the file are used to set the ESMF_GRIDITEM_MASK in the Grid.

The following example code shows you how to create a 2D Grid with both center and corner coordinates using a SCRIP file and a row only regular distribution:

```
grid2D = ESMF_GridCreate(filename="data/T42_grid.nc",  &
           fileFormat=ESMF_FILEFORMAT_SCRIP,  &
           regDecomp=(/PetCount,1/), addCornerStagger=.true., rc=rc)
```

where T42_grid.nc is a 2D global grid of size (128x64) and the resulting Grid is distributed by partitioning the rows evenly over all the PETs.

ESMF also support the creation of a 2D Grid from the SCRIP format Grid file using a user specified ESMF_DistGrid. The following example code demonstrates the creation of an Grid object using a pre-defined DistGrid. The resulting Grid is the same as the one created above:

```
distgrid = ESMF_DistGridCreate((/1,1/), (/128,64/), &
           regDecomp=(/PetCount,1/), rc=rc)
grid2D = ESMF_GridCreate(filename="data/T42_grid.nc",  &
           fileFormat=ESMF_FILEFORMAT_SCRIP,  &
           distGrid=distgrid, addCornerStagger=.true., rc=rc)
```

32.3.9 Create an empty Grid in a parent Component for completion in a child Component

ESMF Grids can be created incrementally. To do this, the user first calls `ESMF_GridEmptyCreate()` to allocate the shell of a Grid. Next, we use the `ESMF_GridEmptyComplete()` call that fills in the Grid and does an internal commit to make it usable. For consistency's sake the `ESMF_GridSetCommitShapeTile()` call must occur on the same or a subset of the PETs as the `ESMF_GridEmptyCreate()` call. The `ESMF_GridEmptyComplete()` call uses the VM for the context in which it's executed and the "empty" Grid contains no information about the VM in which its create was run. This means that if the `ESMF_GridEmptyComplete()` call occurs in a subset of the PETs in which the `ESMF_GridEmptyCreate()` was executed that the Grid is created only in that subset. Inside the subset the Grid will be fine, but outside the subset the Grid objects will still be "empty" and not usable. The following example uses the incremental technique to create a rectangular 10x20 Grid with coordinates at the center and corner stagger locations.

```
!-----------------------------------------------------------------------------
! IN THE PARENT COMPONENT:
! Create an empty Grid in the parent component for use in a child component.
! The parent may be defined on more PETs than the child component.
! The child's [vm or pet list] is passed into the create call so that
! the Grid is defined on the appropriate subset of the parent's PETs.
!-----------------------------------------------------------------------------
   grid2D=ESMF_GridEmptyCreate(rc=rc)



!-----------------------------------------------------------------------------
! IN THE CHILD COMPONENT:
! Set the Grid topology.  Here we define an irregularly distributed
! rectangular Grid.
!-----------------------------------------------------------------------------
   call ESMF_GridEmptyComplete(grid2D,             &
                        countsPerDEDim1=(/6,4/),      &
                        countsPerDEDim2=(/10,3,7/), rc=rc)



!-----------------------------------------------------------------------------
```

```
! Add Grid coordinates at the cell center location.
!-------------------------------------------------------------------------
   call ESMF_GridAddCoord(grid2D, staggerLoc=ESMF_STAGGERLOC_CENTER, rc=rc)



!-------------------------------------------------------------------------
! Add Grid coordinates at the corner stagger location.
!-------------------------------------------------------------------------
   call ESMF_GridAddCoord(grid2D, staggerLoc=ESMF_STAGGERLOC_CORNER, rc=rc)
```

32.3.10 Create a six-tile cubed sphere Grid

This example creates a multi-tile Grid to represent a cubed sphere grid. Each of the six tiles making up the cubed sphere has 45 elements on each side, so the total number of elements is 45x45x6=12150. Each tile is decomposed using a regular decomposition. The first two tiles are decomposed into 2x2 blocks each and the remaining 4 tiles are decomposed into 1x2 block. A total of 16 DEs are used.

In this example, both the center and corner coordinates will be added to the grid.

```
! Set up decomposition for each tile
allocate(decomptile(2,6))
decomptile(:,1)=(/2,2/) ! Tile 1
decomptile(:,2)=(/2,2/) ! Tile 2
decomptile(:,3)=(/1,2/) ! Tile 3
decomptile(:,4)=(/1,2/) ! Tile 4
decomptile(:,5)=(/1,2/) ! Tile 5
decomptile(:,6)=(/1,2/) ! Tile 6

! Create cubed sphere grid
grid2D = ESMF_GridCreateCubedSphere(tileSize=45, regDecompPTile=decomptile, &
            staggerLocList=(/ESMF_STAGGERLOC_CENTER, ESMF_STAGGERLOC_CORNER/), rc=rc)
```

32.3.11 Create a six-tile cubed sphere Grid and apply Schmidt transform

This example creates the same cubed sphere grid with the same regular decomposition as in 32.3.10 with a few differences. First, the coordinates of the grid are of type `ESMF_TYPEKIND_R4` instead of the default `ESMF_TYPEKIND_R8`. Secondly, the coordinate system is `ESMF_COORDSYS_SPH_RAD` instead of the default `ESMF_COORDSYS_SPH_DEG`. Lastly, the grid was then transformed using Schmidt Transformation algorithm on an arbitrary target point and a streatching factor. An optional argument `TransformArgs` of type `ESMF_CubedSphereTransform_Args` is used to pass the Schmidt Transform arguments. `ESMF_CubedSphereTransform_Args` is defined as follows:

```
type ESMF_CubedSphereTransform_Args
   real(ESMF_KIND_R8) :: stretch_factor, target_lat, target_lon
end type
```

Note `target_lat` and `target_lon` are in radians.

```
transformArgs%stretch_factor = 0.5;
transformArgs%target_lon = 0.0; ! in radians
```

```
transformArgs%target_lat = 1.3; ! in radians
grid2D = ESMF_GridCreateCubedSphere(tileSize=45, regDecompPTile=decomptile, &
            staggerLocList = (/ESMF_STAGGERLOC_CENTER, ESMF_STAGGERLOC_CORNER/), &
            coordTypeKind = ESMF_TYPEKIND_R4, &
            coordSys = ESMF_COORDSYS_SPH_RAD, &
            transformArgs=transformArgs, &
            rc=rc)
```

32.3.12 Create a six-tile cubed sphere Grid from a GRIDSPEC Mosaic file

This example creates a six-tile Grid to represent a cubed sphere grid defined in a GRIDSPEC Mosaic file `C48_mosaic.nc`. The GRIDSPEC mosaic file format is defined in the document GRIDSPEC: A standard for the description of grids used in Earth System models by V. Balaji, Alistair Adcroft and Zhi Liang.

The mosaic file contains the following information:

```
netcdf C48_mosaic {
dimensions:
       ntiles = 6 ;
       ncontact = 12 ;
       string = 255 ;
variables:
       char mosaic(string) ;
               mosaic:standard_name = "grid_mosaic_spec" ;
               mosaic:children = "gridtiles" ;
               mosaic:contact_regions = "contacts" ;
               mosaic:grid_descriptor = "" ;
       char gridlocation(string) ;
               gridlocation:standard_name = "grid_file_location" ;
       char gridfiles(ntiles, string) ;
       char gridtiles(ntiles, string) ;
       char contacts(ncontact, string) ;
               contacts:standard_name = "grid_contact_spec" ;
               contacts:contact_type = "boundary" ;
               contacts:alignment = "true" ;
               contacts:contact_index = "contact_index" ;
               contacts:orientation = "orient" ;
       char contact_index(ncontact, string) ;
               contact_index:standard_name = "starting_ending_point_index_of_contact" ;

// global attributes:
               :grid_version = "0.2" ;
               :code_version = "$Name: testing $" ;
data:

mosaic = "C48_mosaic" ;

gridlocation = "/archive/z1l/tools/test_20091028/output_all/" ;

gridfiles =
  "horizontal_grid.tile1.nc",
  "horizontal_grid.tile2.nc",
```

```
    "horizontal_grid.tile3.nc",
    "horizontal_grid.tile4.nc",
    "horizontal_grid.tile5.nc",
    "horizontal_grid.tile6.nc" ;

  gridtiles =
    "tile1",
    "tile2",
    "tile3",
    "tile4",
    "tile5",
    "tile6" ;

  contacts =
    "C48_mosaic:tile1::C48_mosaic:tile2",
    "C48_mosaic:tile1::C48_mosaic:tile3",
    "C48_mosaic:tile1::C48_mosaic:tile5",
    "C48_mosaic:tile1::C48_mosaic:tile6",
    "C48_mosaic:tile2::C48_mosaic:tile3",
    "C48_mosaic:tile2::C48_mosaic:tile4",
    "C48_mosaic:tile2::C48_mosaic:tile6",
    "C48_mosaic:tile3::C48_mosaic:tile4",
    "C48_mosaic:tile3::C48_mosaic:tile5",
    "C48_mosaic:tile4::C48_mosaic:tile5",
    "C48_mosaic:tile4::C48_mosaic:tile6",
    "C48_mosaic:tile5::C48_mosaic:tile6" ;

   contact_index =
    "96:96,1:96::1:1,1:96",
    "1:96,96:96::1:1,96:1",
    "1:1,1:96::96:1,96:96",
    "1:96,1:1::1:96,96:96",
    "1:96,96:96::1:96,1:1",
    "96:96,1:96::96:1,1:1",
    "1:96,1:1::96:96,96:1",
    "96:96,1:96::1:1,1:96",
    "1:96,96:96::1:1,96:1",
    "1:96,96:96::1:96,1:1",
    "96:96,1:96::96:1,1:1",
    "96:96,1:96::1:1,1:96" ;
  }
```

A dummy variable with its `standard_name` attribute set to `grid_mosaic_spec` is required. The `children` attribute of this dummy variable provides the variable name that contains the tile names and the `contact_region` attribute points to the variable name that defines a list of tile pairs that are connected to each other. For a Cubed Sphere grid, there are six tiles and 12 connections. The `contacts` variable has three required attributes: `standard_name`, `contact_type`, and `contact_index`. `startand_name` has to be set to `grid_contact_spec`. `contact_type` has to be `boundary`. ESMF does not support overlapping contact regions. `contact_index` defines the variable name that contains the information how the two adjacent tiles are connected to each other. The `contact_index` variable contains 12 entries. Each entry contains the index of four points that defines the two edges that contact to each other from the two neighboring tiles. Assuming the four points are A, B, C, and D. A and B defines the edge of tile 1 and C and D defines the edge of tile2. A is the same point as C and B is the same as D. (Ai, Aj) is the index for point A. The entry looks like this:

```
Ai:Bi,Aj:Bj::Ci:Di,Cj:Dj
```

The associated tile file names are defined in variable `gridfiles` and the directory path is defined in variable `gridlocation`. The `gridlocation` can be overwritten with an optional arguemnt `TileFilePath`. Each tile is decomposed using a regular decomposition. The first two tiles are decomposed into 2x2 blocks each and the remaining 4 tiles are decomposed into 1x2 block. A total of 16 DEs are used.

`ESMF_GridCreateMosaic()` first reads in the mosaic file and defines the tile connections in the `ESMF_DistGrid` using the information defined in variables `contacts` and `contact_index`. Then it reads in the coordinates defined in the tile files if the optional argument `staggerLocList` is provided. The coordinates defined in the tile file are a `supergrid`. A supergrid contains all the stagger locations in one grid. It contains the corner, edge and center coordinates all in one 2D array. In this example, there are 48 elements in each side of a tile, therefore, the size of the supergrid is 48*2+1=97, i.e. 97x97.

Here is the header of one of the tile files:

```
netcdf horizontal_grid.tile1 {
dimensions:
       string = 255 ;
       nx = 96 ;
       ny = 96 ;
       nxp = 97 ;
       nyp = 97 ;
variables:
       char tile(string) ;
               tile:standard_name = "grid_tile_spec" ;
               tile:geometry = "spherical" ;
               tile:north_pole = "0.0 90.0" ;
               tile:projection = "cube_gnomonic" ;
               tile:discretization = "logically_rectangular" ;
               tile:conformal = "FALSE" ;
       double x(nyp, nxp) ;
               x:standard_name = "geographic_longitude" ;
               x:units = "degree_east" ;
       double y(nyp, nxp) ;
               y:standard_name = "geographic_latitude" ;
               y:units = "degree_north" ;
       double dx(nyp, nx) ;
               dx:standard_name = "grid_edge_x_distance" ;
               dx:units = "meters" ;
       double dy(ny, nxp) ;
               dy:standard_name = "grid_edge_y_distance" ;
               dy:units = "meters" ;
       double area(ny, nx) ;
               area:standard_name = "grid_cell_area" ;
               area:units = "m2" ;
       double angle_dx(nyp, nxp) ;
               angle_dx:standard_name = "grid_vertex_x_angle_WRT_geographic_east" ;
               angle_dx:units = "degrees_east" ;
       double angle_dy(nyp, nxp) ;
               angle_dy:standard_name = "grid_vertex_y_angle_WRT_geographic_north" ;
               angle_dy:units = "degrees_north" ;
       char arcx(string) ;
               arcx:standard_name = "grid_edge_x_arc_type" ;
               arcx:north_pole = "0.0 90.0" ;
```

```
// global attributes:
                :grid_version = "0.2" ;
                :code_version = "$Name: testing $" ;
                :history = "/home/z1l/bin/tools_20091028/make_hgrid --grid_type gnomonic_e
}
```

The tile file not only defines the coordinates at all staggers, it also has a complete specification of distances, angles, and areas. In ESMF, we currently only use the `geographic_longitude` and `geographic_latitude` variables.

```
! Set up decomposition for each tile
allocate(decomptile(2,6))
decomptile(:,1)=(/2,2/) ! Tile 1
decomptile(:,2)=(/2,2/) ! Tile 2
decomptile(:,3)=(/1,2/) ! Tile 3
decomptile(:,4)=(/1,2/) ! Tile 4
decomptile(:,5)=(/1,2/) ! Tile 5
decomptile(:,6)=(/1,2/) ! Tile 6

! Create cubed sphere grid without reading in the coordinates
grid2D = ESMF_GridCreateMosaic(filename='data/C48_mosaic.nc', &
           tileFilePath='./data/', regDecompPTile=decomptile, rc=rc)


! Create cubed sphere grid and read in the center and corner stagger coordinates
! from the tile files

grid2D = ESMF_GridCreateMosaic(filename='data/C48_mosaic.nc', &
           staggerLocList=(/ESMF_STAGGERLOC_CENTER, ESMF_STAGGERLOC_CORNER/), &
           tileFilePath='./data/', regDecompPTile=decomptile, rc=rc)



! Create cubed sphere grid and read in the edge staggers' coordinates
! from the tile files, set the coordTypeKind to ESMF_TYPEKIND_R4

grid2D = ESMF_GridCreateMosaic(filename='data/C48_mosaic.nc', &
           staggerLocList=(/ESMF_STAGGERLOC_EDGE1, ESMF_STAGGERLOC_EDGE2/), &
           coordTypeKind = ESMF_TYPEKIND_R4, &
           tileFilePath='./data/', regDecompPTile=decomptile, rc=rc)
```

32.3.13 Grid stagger locations

A useful finite difference technique is to place different physical quantities at different locations within a grid cell. This *staggering* of the physical variables on the mesh is introduced so that the difference of a field is naturally defined at the location of another variable. This method was first formalized by Mesinger and Arakawa (1976).

To support the staggering of variables, the Grid provides the idea of *stagger locations*. Stagger locations refer to the places in a Grid cell that can contain coordinates or other data and once a Grid is associated with a Field object, field data. Typically Grid data can be located at the cell center, at the cell corners, or at the cell faces, in 2D, 3D, and higher dimensions. (Note that any Arakawa stagger can be constructed of a set of Grid stagger locations.) There are

predefined stagger locations (see Section 32.2.6), or, should the user wish to specify their own, there is also a set of methods for generating custom locations (See Section 32.3.25). Users can put Grid data (e.g. coordinates) at multiple stagger locations in a Grid. In addition, the user can create a Field at any of the stagger locations in a Grid.

By default the Grid data array at the center stagger location starts at the bottom index of the Grid (default (1,1..,1)) and extends up to the maximum cell index in the Grid (e.g. given by the `maxIndex` argument). Other stagger locations also start at the bottom index of the Grid, however, they can extend to +1 element beyond the center in some dimensions to allow for the extra space to surround the center elements. See Section 32.3.25 for a description of this extra space and how to adjust if it necessary. There are `ESMF_GridGet` subroutines (e.g. `ESMF_GridGetCoord()` or `ESMF_GridGetItem()`) which can be used to retrieve the stagger bounds for the piece of Grid data on a particular DE.

32.3.14 Associate coordinates with stagger locations

The primary type of data the Grid is responsible for storing is coordinates. The coordinate values in a Grid can be employed by the user in calculations or to describe the geometry of a Field. The Grid coordinate values are also used by `ESMF_FieldRegridStore()` when calculating the interpolation matrix between two Fields. The user can allocate coordinate arrays without setting coordinate values using the `ESMF_GridAddCoord()` call. (See Section 32.3.16 for a discussion of setting/getting coordinate values.) When adding or accessing coordinate data, the stagger location is specified to tell the Grid method where in the cell to get the data. The different stagger locations may also have slightly different index ranges and sizes. Please see Section 32.3.13 for a discussion of Grid stagger locations.

The following example adds coordinate storage to the corner stagger location in a Grid using one of the predefined stagger locations.

```
call ESMF_GridAddCoord(grid2D, staggerLoc=ESMF_STAGGERLOC_CORNER, rc=rc)
```

Note only the center stagger location `ESMF_STAGGERLOC_CENTER` is supported in an arbitrarily distributed Grid.

32.3.15 Specify the relationship of coordinate Arrays to index space dimensions

To specify how the coordinate arrays are mapped to the index dimensions the arguments `coordDep1`, `coordDep2`, and `coordDep3` are used, each of which is a Fortran array. The values of the elements in a `coordDep` array specify which index dimension the corresponding coordinate dimension maps to. For example, `coordDep1=(/1,2/)` means that the first dimension of coordinate 1 maps to index dimension 1 and the second maps to index dimension 2. For a grid with non-arbitrary distribution, the default values for `coordDep1`, `coordDep2` and `coordDep3` are `/1,2..,gridDimCount/`. This default thus specifies a curvilinear grid.

The following call demonstrates the creation of a 10x20 2D rectilinear grid where the first coordinate component is mapped to the second index dimension (i.e. is of size 20) and the second coordinate component is mapped to the first index dimension (i.e. is of size 10).

```
grid2D=ESMF_GridCreateNoPeriDim(countsPerDEDim1=(/5,5/), &
       countsPerDEDim2=(/7,7,6/),                        &
       coordDep1=(/2/),                                  &
       coordDep2=(/1/), rc=rc)
```

The following call demonstrates the creation of a 10x20x30 2D plus 1 curvilinear grid where coordinate component 1 and 2 are still 10x20, but coordinate component 3 is mapped just to the third index dimension.

```
grid2D=ESMF_GridCreateNoPeriDim(countsPerDEDim1=(/6,4/), &
       countsPerDEDim2=(/10,7,3/), countsPerDEDim3=(/30/), &
```

```
        coordDep1=(/1,2/), coordDep2=(/1,2/), &
        coordDep3=(/3/), rc=rc)
```

By default the local piece of the array on each PET starts at (1,1,..), however, the indexing for each grid coordinate array on each DE may be shifted to the global indices by using the `indexflag`. For example, the following call switches the grid to use global indices.

```
grid2D=ESMF_GridCreateNoPeriDim(countsPerDEDim1=(/6,4/), &
        countsPerDEDim2=(/10,7,3/), indexflag=ESMF_INDEX_GLOBAL, rc=rc)
```

For an arbitrarily distributed grid, the default value of a coordinate array dimension is `ESMF_DIM_ARB` if the index dimension is arbitrarily distributed and is `n` where `n` is the index dimension itself when it is not distributed. The following call is equivalent to the example in Section 32.3.7

```
grid3D=ESMF_GridCreateNoPeriDim( &
         maxIndex = (/xdim, ydim, zdim/), &
         arbIndexList = localArbIndex, &
         arbIndexCount = localArbIndexCount,          &
         coordDep1 = (/ESMF_DIM_ARB/), &
         coordDep2 = (/ESMF_DIM_ARB/), &
         coordDep3 = (/3/), &
         rc=rc)
```

The following call uses non-default `coordDep1`, `coordDep2`, and `coordDep3` to create a 3D curvilinear grid with its horizontal dimensions arbitrarily distributed.

```
grid3D=ESMF_GridCreateNoPeriDim( &
         maxIndex = (/xdim, ydim, zdim/), &
         arbIndexList = localArbIndex, &
         arbIndexCount = localArbIndexCount,          &
         coordDep1 = (/ESMF_DIM_ARB, 3/), &
         coordDep2 = (/ESMF_DIM_ARB, 3/), &
         coordDep3 = (/ESMF_DIM_ARB, 3/), &
         rc=rc)
```

32.3.16 Access coordinates

Once a Grid has been created, the user has several options to access the Grid coordinate data. The first of these, `ESMF_GridSetCoord()`, enables the user to use ESMF Arrays to set data for one stagger location across the whole Grid. For example, the following sets the coordinates in the first dimension (e.g. x) for the corner stagger location to those in the ESMF Array `arrayCoordX`.

```
call ESMF_GridSetCoord(grid2D, &
        staggerLoc=ESMF_STAGGERLOC_CORNER, &
        coordDim=1, array=arrayCoordX, rc=rc)
```

The method `ESMF_GridGetCoord()` allows the user to obtain a reference to an ESMF Array which contains the coordinate data for a stagger location in a Grid. The user can then employ any of the standard `ESMF_Array` tools to operate on the data. The following copies the coordinates from the second component of the corner and puts it into the ESMF Array `arrayCoordY`.

```
call ESMF_GridGetCoord(grid2D,    &
       staggerLoc=ESMF_STAGGERLOC_CORNER,    &
       coordDim=2,                           &
       array=arrayCoordY, rc=rc)
```

Alternatively, the call `ESMF_GridGetCoord()` gets a Fortran pointer to the coordinate data. The user can then operate on this array in the usual manner. The following call gets a reference to the Fortran array which holds the data for the second coordinate (e.g. y).

```
call ESMF_GridGetCoord(grid2D, coordDim=2, localDE=0, &
       staggerloc=ESMF_STAGGERLOC_CORNER, farrayPtr=coordY2D, rc=rc)
```

32.3.17 Associate items with stagger locations

The ESMF Grids contain the ability to store other kinds of data beyond coordinates. These kinds of data are referred to as "items". Although the user is free to use this data as they see fit, the user should be aware that this data may also be used by other parts of ESMF (e.g. the ESMF_GRIDITEM_MASK item is used in regridding). Please see Section 32.2.2 for a list of valid items.

Like coordinates items are also created on stagger locations. When adding or accessing item data, the stagger location is specified to tell the Grid method where in the cell to get the data. The different stagger locations may also have slightly different index ranges and sizes. Please see Section 32.3.13 for a discussion of Grid stagger locations. The user can allocate item arrays without setting item values using the `ESMF_GridAddItem()` call. (See Section 32.3.18 for a discussion of setting/getting item values.)

The following example adds mask item storage to the corner stagger location in a grid.

```
call ESMF_GridAddItem(grid2D, staggerLoc=ESMF_STAGGERLOC_CORNER, &
       itemflag=ESMF_GRIDITEM_MASK, rc=rc)
```

32.3.18 Access items

Once an item has been added to a Grid, the user has several options to access the data. The first of these, `ESMF_GridSetItem()`, enables the user to use ESMF Arrays to set data for one stagger location across the whole Grid. For example, the following sets the mask item in the corner stagger location to those in the ESMF Array `arrayMask`.

```
call ESMF_GridSetItem(grid2D,             &
       staggerLoc=ESMF_STAGGERLOC_CORNER, &
       itemflag=ESMF_GRIDITEM_MASK, array=arrayMask, rc=rc)
```

The method `ESMF_GridGetItem()` allows the user to get a reference to the Array which contains item data for a stagger location on a Grid. The user can then employ any of the standard `ESMF_Array` tools to operate on the data. The following gets the mask data from the corner and puts it into the ESMF Array `arrayMask`.

```
call ESMF_GridGetItem(grid2D,             &
       staggerLoc=ESMF_STAGGERLOC_CORNER, &
       itemflag=ESMF_GRIDITEM_MASK,            &
       array=arrayMask, rc=rc)
```

Alternatively, the call `ESMF_GridGetItem()` gets a Fortran pointer to the item data. The user can then operate on this array in the usual manner. The following call gets a reference to the Fortran array which holds the data for the mask data.

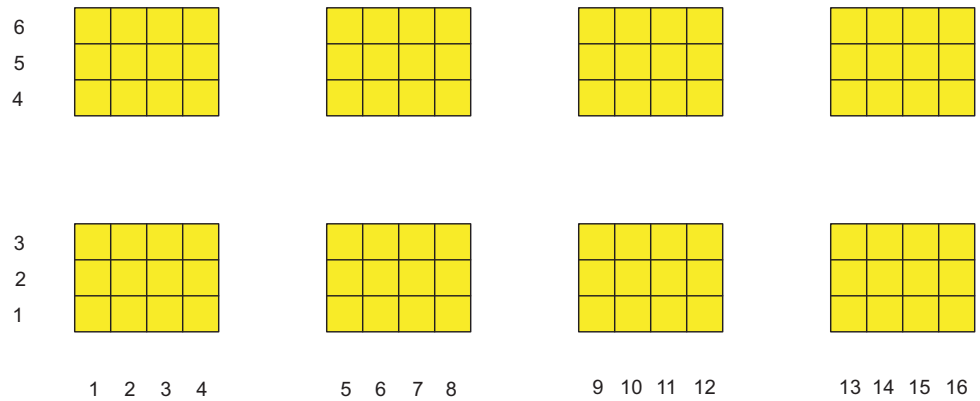

Figure 17: An example of a Grid's exclusive region for the corner stagger

```
call ESMF_GridGetItem(grid2D, localDE=0,    &
       staggerloc=ESMF_STAGGERLOC_CORNER,   &
       itemflag=ESMF_GRIDITEM_MASK, farrayPtr=mask2D, rc=rc)
```

32.3.19 Grid regions and bounds

Like an Array or a Field, the index space of each stagger location in the Grid contains an exclusive region, a computational region and a total region. Please see Section 29.2.6 for an in depth description of these regions.

The exclusive region is the index space defined by the distgrid of each stagger location of the Grid. This region is the region which is owned by the DE and is the region operated on by communication methods such as `ESMF_FieldRegrid()`. The exclusive region for a stagger location is based on the exclusive region defined by the DistGrid used to create the Grid. The size of the stagger exclusive region is the index space for the Grid cells, plus the stagger padding.

The default stagger padding depends on the topology of the Grid. For an unconnected dimension the stagger padding is a width of 1 on the upper side (i.e. `gridEdgeUWidth=(1,1,1,1...)`). For a periodic dimension there is no stagger padding. By adjusting `gridEdgeLWidth` and `gridEdgeUWidth`, the user can set the stagger padding for the whole Grid and thus the exclusive region can be adjusted at will around the index space corresponding to the cells. The user can also use `staggerEdgeLWidth` and `staggerEdgeUWidth` to adjust individual stagger location padding within the Grid's padding (Please see Section 32.3.26 for further discussion of customizing the stagger padding).

Figure 17 shows an example of a Grid exclusive region for the `ESMF_STAGGERLOC_CORNER` stagger with default stagger padding. This exclusive region would be for a Grid generated by either of the following calls:

```
grid2D=ESMF_GridCreateNoPeriDim(regDecomp=(/2,4/), maxIndex=(/5,15/), &
         indexflag=ESMF_INDEX_GLOBAL, rc=rc)

grid2D=ESMF_GridCreateNoPeriDim(countsPerDEDim1=(/4,4,4,3/), &
         countsPerDEDim2=(/3,2/), indexflag=ESMF_INDEX_GLOBAL, rc=rc)
```

Each rectangle in this diagram represents a DE and the numbers along the sides are the index values of the locations in the DE. Note that the exclusive region has one extra index location in each dimension than the number of cells because of the padding for the larger corner stagger location.

The computational region is a user-settable region which can be used to distinguish a particular area for computation. The Grid doesn't currently contain functionality to let the user set the computational region so it defaults to the exclusive region. However, if the user sets an Array holding different computational bounds into the Grid then that Array's computational bounds will be used.

The total region is the outermost boundary of the memory allocated on each DE to hold the data for the stagger location on that DE. This region can be as small as the exclusive region, but may be larger to include space for halos, memory padding, etc. The total region is what is enlarged to include space for halos, and the total region must be large enough to contain the maximum halo operation on the Grid. The Grid doesn't currently contain functionality to let the user set the total region so it defaults to the exclusive region. However, if the user sets an Array holding different total bounds into the Grid then that Array's total bounds will be used.

The user can retrieve a set of bounds for each index space region described above: exclusive bounds, computational bounds, and total bounds. Note that although some of these are similar to bounds provided by ESMF_Array subroutines (see Section 29.2.6) the format here is different. The Array bounds are only for distributed dimensions and are ordered to correspond to the dimension order in the associated DistGrid. The bounds provided by the Grid are ordered according to the order of dimensions of the data in question. This means that the bounds provided should be usable "as is" to access the data.

Each of the three types of bounds refers to the maximum and minimum per dimension of the index ranges of a particular region. The parameters referring to the maximums contain a 'U' for upper. The parameters referring to the minimums contain an 'L' for lower. The bounds and associated quantities are almost always given on a per DE basis. The three types of bounds `exclusiveBounds`, `computationalBounds`, and `totalBounds` refer to the ranges of the exclusive region, the computational region, and the total region. Each of these bounds also has a corresponding count parameter which gives the number of items across that region (on a DE) in each dimension. (e.g. `totalCount(d)=totallUBound(i)-totalLBound(i)+1`). Width parameters give the spacing between two different types of region. The `computationalWidth` argument gives the spacing between the exclusive region and the computational region. The `totalWidth` argument gives the spacing between the total region and the computational region. Like the other bound information these are typically on a per DE basis, for example specifying `totalLWidth=(1,1)` makes the bottom of the total region one lower in each dimension than the computational region on each DE. The exceptions to the per DE rule are `staggerEdgeWidth`, and `gridEdgeWidth` which give the spacing only on the DEs along the boundary of the Grid.

All the above bound discussions only apply to the grid with non-arbitrary distributions, i.e., regular or irregular distributions. For an arbitrarily distributed grid, only center stagger location is supported and there is no padding around the grid. Thus, the exclusive bounds, the total bounds and the computational bounds are identical and `staggerEdgeWidth`, and `gridEdgeWidth` are all zeros.

32.3.20 Get Grid coordinate bounds

When operating on coordinates the user may often wish to retrieve the bounds of the piece of coordinate data on a particular local DE. This is useful for iterating through the data to set coordinates, retrieve coordinates, or do calculations. The method `ESMF_GridGetCoord` allows the user to retrieve bound information for a particular coordinate array.

As described in the previous section there are three types of bounds the user can get: exclusive bounds, computational bounds, and total bounds. The bounds provided by `ESMF_GridGetCoordBounds` are for both distributed and undistributed dimensions and are ordered according to the order of dimensions in the coordinate. This means that the bounds provided should be usable "as is" to access data in the coordinate array. In the case of factorized coordinate Arrays where a coordinate may have a smaller dimension than its associated Grid, then the dimension of the coordinate's bounds are the dimension of the coordinate, not the Grid.

The following is an example of retrieving the bounds for localDE 0 for the first coordinate array from the corner stagger location.

```
call ESMF_GridGetCoordBounds(grid2D, coordDim=1, localDE=0,  &
       staggerLoc=ESMF_STAGGERLOC_CORNER,                        &
       exclusiveLBound=elbnd, exclusiveUBound=eubnd,             &
       computationalLBound=clbnd, computationalUBound=cubnd,     &
       totalLBound=tlbnd, totalUBound=tubnd, rc=rc)
```

32.3.21 Get Grid stagger location bounds

When operating on data stored at a particular stagger in a Grid the user may find it useful to be able to retrieve the bounds of the data on a particular local DE. This is useful for iterating through the data for computations or allocating arrays to hold the data. The method `ESMF_GridGet` allows the user to retrieve bound information for a particular stagger location.

As described in Section 32.3.19 there are three types of bounds the user can typically get, however, the Grid doesn't hold data at a stagger location (that is the job of the Field), and so no Array is contained there and so no total region exists, so the user may only retrieve exclusive and computational bounds from a stagger location. The bounds provided by `ESMF_GridGet` are ordered according to the order of dimensions in the Grid.

The following is an example of retrieving the bounds for localDE 0 from the corner stagger location.

```
call ESMF_GridGet(grid2D, localDE=0,                        &
       staggerLoc=ESMF_STAGGERLOC_CORNER,                   &
       exclusiveLBound=elbnd, exclusiveUBound=eubnd,        &
       computationalLBound=clbnd, computationalUBound=cubnd, rc=rc)
```

32.3.22 Get Grid stagger location information

In addition to the per DE information that can be accessed about a stagger location there is some global information that can accessed by using `ESMF_GridGet` without specifying a localDE. One of the uses of this information is to create an ESMF Array to hold data for a stagger location.

The information currently available from a stagger location is the `distgrid`. The `distgrid` gives the distgrid which describes the size and distribution of the elements in the stagger location.

The following is an example of retrieving information for localDE 0 from the corner stagger location.

```
! Get info about staggerloc
call ESMF_GridGet(grid2D, staggerLoc=ESMF_STAGGERLOC_CORNER,  &
       distgrid=staggerDistgrid, &
       rc=rc)
```

32.3.23 Create an Array at a stagger location

In order to create an Array to correspond to a Grid stagger location several pieces of information need to be obtained from both the Grid and the stagger location in the Grid.

The information that needs to be obtained from the Grid is the `distgridToGridMap` to ensure that the new Array has its dimensions are mapped correctly to the Grid. These are obtained using the `ESMF_GridGet` method.

The information that needs to be obtained from the stagger location is the distgrid that describes the size and distribution of the elements in the stagger location. This information can be obtained using the stagger location specific `ESMF_GridGet` method.

The following is an example of using information from a 2D Grid with non-arbitrary distribution to create an Array corresponding to a stagger location.

```
! Get info from Grid
call ESMF_GridGet(grid2D, distgridToGridMap=distgridToGridMap, rc=rc)


! Get info about staggerloc
call ESMF_GridGet(grid2D, staggerLoc=ESMF_STAGGERLOC_CORNER, &
       distgrid=staggerDistgrid, &
       rc=rc)



! construct ArraySpec
call ESMF_ArraySpecSet(arrayspec, rank=2, typekind=ESMF_TYPEKIND_R8, rc=rc)



! Create an Array based on info from grid
array=ESMF_ArrayCreate(arrayspec=arrayspec, &
        distgrid=staggerDistgrid, distgridToArrayMap=distgridToGridMap, &
        rc=rc)
```

Creating an Array for a Grid with arbitrary distribution is different. For a 2D Grid with both dimension arbitrarily distributed, the Array dimension is 1. For a 3D Grid with two arbitrarily distributed dimensions and one undistributed dimension, the Array dimension is 2. In general, if the Array does not have any ungridded dimension, the Array dimension should be 1 plus the number of undistributed dimensions of the Grid.

The following is an example of creating an Array for a 3D Grid with 2 arbitrarily distributed dimensions such as the one defined in Section 32.3.7.

```
! Get distGrid from Grid
call ESMF_GridGet(grid3D, distgrid=distgrid, rc=rc)



! construct ArraySpec
call ESMF_ArraySpecSet(arrayspec, rank=2, typekind=ESMF_TYPEKIND_R8, rc=rc)



! Create an Array based on the presence of distributed dimensions
array=ESMF_ArrayCreate(arrayspec=arrayspec,distgrid=distgrid, rc=rc)
```

32.3.24 Create more complex Grids using DistGrid

Besides the shortcut methods for creating a Grid object such as `ESMF_GridCreateNoPeriDim()`, there is a set of methods which give the user more control over the specifics of the grid. The following describes the more general

interface, using DistGrid. The basic idea is to first create an ESMF DistGrid object describing the distribution and shape of the Grid, and then to employ that to either directly create the Grid or first create Arrays and then create the Grid from those. This method gives the user maximum control over the topology and distribution of the Grid. See the DistGrid documentation in Section 37.1 for an in-depth description of its interface and use.

As an example, the following call constructs a 10x20 Grid with a lower bound of (1,2).

```
! Create DistGrid
distgrid2D = ESMF_DistGridCreate(minIndex=(/1,2/), maxIndex=(/11,22/), &
        rc=rc)


! Create Grid
grid3D=ESMF_GridCreate(distGrid=distgrid2D, rc=rc)
```

To alter which dimensions are distributed, the `distgridToGridMap` argument can be used. The `distgridToGridMap` is used to set which dimensions of the Grid are mapped to the dimensions described by `maxIndex`. In other words, it describes how the dimensions of the underlying default DistGrid are mapped to the Grid. Each entry in `distgridToGridMap` contains the Grid dimension to which the corresponding DistGrid dimension should be mapped. The following example illustrates the creation of a Grid where the largest dimension is first. To accomplish this the two dimensions are swapped.

```
! Create DistGrid
distgrid2D = ESMF_DistGridCreate(minIndex=(/1,2/), maxIndex=(/11,22/), &
     rc=rc)


! Create Grid
grid2D=ESMF_GridCreate(distGrid=distgrid2D, distgridToGridMap=(/2,1/), &
     rc=rc)
```

32.3.25 Specify custom stagger locations

Although ESMF provides a set of predefined stagger locations (See Section 32.2.6), the user may need one outside this set. This section describes the construction of custom stagger locations.

To completely specify a stagger for an arbitrary number of dimensions, we define the stagger location in terms of a set of cartesian coordinates. The cell is represented by a n-dimensional cube with sides of length 2, and the coordinate origin located at the center of the cell. The geometry of the cell is for reference purposes only, and does not literally represent the actual shape of the cell. Think of this method instead as an easy way to specify a part (e.g. center, corner, face) of a higher dimensional cell which is extensible to any number of dimensions.

To illustrate this approach, consider a 2D cell. In 2 dimensions the cell is represented by a square. An xy axis is placed at its center, with the positive x-axis oriented *East* and the positive y-axis oriented *North*. The resulting coordinate for the lower left corner is at $(-1, -1)$, and upper right corner at $(1, 1)$. However, because our staggers are symmetric they don't need to distinguish between the -1, and the 1, so we only need to concern ourselves with the first quadrant of this cell. We only need to use the 1, and the 0, and many of the cell locations collapse together (e.g. we only need to represent one corner). See figure 18 for an illustration of these concepts.

The cell center is represented by the coordinate pair $(0, 0)$ indicating the origin. The cell corner is $+1$ in each direction, giving a coordinate pair of $(1, 1)$. The edges are each $+1$ in one dimension and 0 in the other indicating that they're even with the center in one dimension and offset in the other.

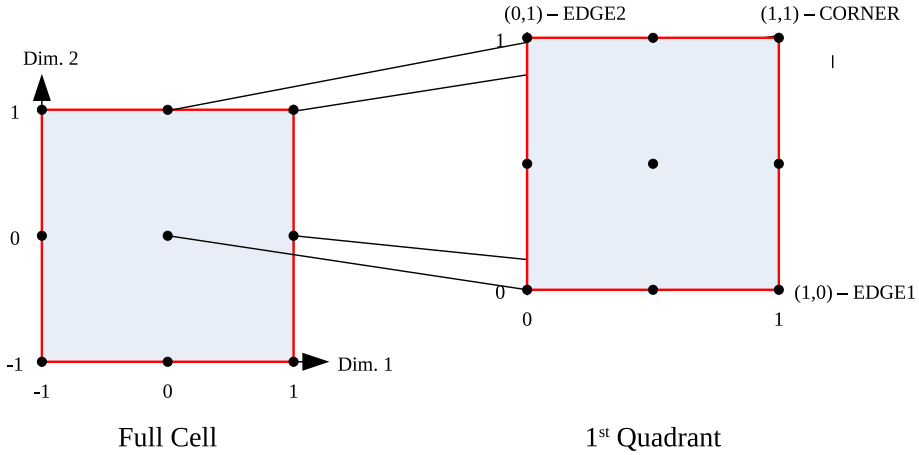

Figure 18: An example of specifying 2D stagger locations using coordinates.

For three dimensions, the vertical component of the stagger location can be added by simply adding an additional coordinate. The three dimensional generalization of the cell center becomes $(0, 0, 0)$ and the cell corner becomes $(1, 1, 1)$. The rest of the 3D stagger locations are combinations of $+1$ offsets from the center.

To generalize this to d dimensions, to represent a d dimensional stagger location. A set of d 0 and 1 is used to specify for each dimension whether a stagger location is aligned with the cell center in that dimension (0), or offset by $+1$ in that dimension (1). Using this scheme we can represent any symmetric stagger location.

To construct a custom stagger location in ESMF the subroutine `ESMF_StaggerLocSet()` is used to specify, for each dimension, whether the stagger is located at the interior (0) or on the boundary (1) of the cell. This method allows users to construct stagger locations for which there is no predefined value. In this example, it's used to set the 4D center and 4D corner locations.

```
! Set Center
call ESMF_StaggerLocSet(staggerLoc,loc=(/0,0,0,0/),rc=rc)

call ESMF_GridAddCoord(grid4D, staggerLoc=staggerLoc, rc=rc)



! Set Corner
call ESMF_StaggerLocSet(staggerLoc,loc=(/1,1,1,1/),rc=rc)


call ESMF_GridAddCoord(grid4D, staggerLoc=staggerLoc, rc=rc)
```

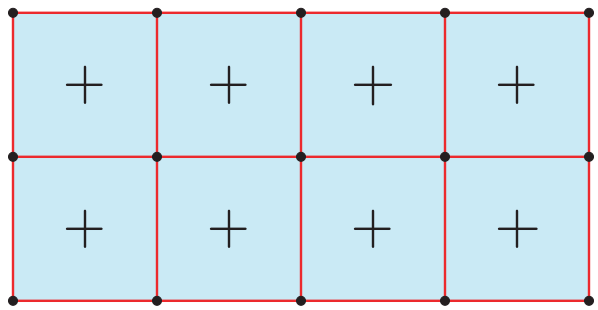

Figure 19: An example 2D Grid with cell centers and corners.

32.3.26 Specify custom stagger padding

There is an added complication with the data (e.g. coordinates) stored at stagger locations in that they can require different amounts of storage depending on the underlying Grid type.

Consider the example 2D grid in figure 19, where the dots represent the cell corners and the "+" represents the cell centers. For the corners to completely enclose the cell centers (symmetric stagger), the number of corners in each dimension needs to be one greater then the number of cell centers. In the above figure, there are two rows and three columns of cell centers. To enclose the cell centers, there must be three rows and four columns of cell corners. This is true in general for Grids without periodicity or other connections. In fact, for a symmetric stagger, given that the center location requires n x m storage, the corresponding corner location requires n+1 x m+1, and the edges, depending on the side, require n+1 x m or m+1 x n. In order to add the extra storage, a new DistGrid is created at each stagger location. This Distgrid is similar to the DistGrid used to create the Grid, but has an extra set of elements added to hold the index locations for the stagger padding. By default, when the coordinate arrays are created, one extra layer of padding is added to the index space to create symmetric staggers (i.e. the center location is surrounded). The default is to add this padding on the positive side, and to only add this padding where needed (e.g. no padding for the center, padding on both dimensions for the corner, in only one dimension for the edge in 2D.) There are two ways for the user to change these defaults.

One way is to use the `GridEdgeWidth` or `GridAlign` arguments when creating a Grid. These arguments can be used to change the default padding around the Grid cell index space. This extra padding is used by default when setting the padding for a stagger location.

The `gridEdgeLWidth` and `gridEdgeUWidth` arguments are both 1D arrays of the same size as the Grid dimension. The entries in the arrays give the extra offset from the outer boundary of the grid cell index space. The following example shows the creation of a Grid with all the extra space to hold stagger padding on the negative side of a Grid. This is the reverse of the default behavior. The resulting Grid will have an exclusive region which extends from $(-1,-1)$ to $(10,10)$, however, the cell center stagger location will still extend from $(1,1)$ to $(10,10)$.

```
grid2D=ESMF_GridCreateNoPeriDim(minIndex=(/1,1/),maxIndex=(/10,10/), &
         gridEdgeLWidth=(/1,1/), gridEdgeUWidth=(/0,0/), rc=rc)
```

To indicate how the data in a Grid's stagger locations are aligned with the cell centers, the optional `gridAlign` parameter may be used. This parameter indicates which stagger elements in a cell share the same index values as the

cell center. For example, in a 2D cell, it would indicate which of the four corners has the same index value as the center. To set gridAlign, the values -1,+1 are used to indicate the alignment in each dimension. This parameter is mostly informational, however, if the gridEdgeWidth parameters are not set then its value determines where the default padding is placed. If not specified, then the default is to align all staggers to the most negative, so the padding is on the positive side. The following code illustrates creating a Grid aligned to the reverse of default (with everything to the positive side). This creates a Grid identical to that created in the previous example.

```
grid2D=ESMF_GridCreateNoPeriDim(minIndex=(/1,1/),maxIndex=(/10,10/), &
         gridAlign=(/1,1/), rc=rc)
```

The gridEdgeWidth and gridAlign arguments both allow the user to set the default padding to be used by stagger locations in a Grid. By default, stagger locations allocated in a Grid set their stagger padding based on these values. A stagger location's padding in each dimension is equal to the value of gridEdgeWidth (or the value implied by gridAlign), unless the stagger location is centered in a dimension in which case the stagger padding is 0. For example, the cell center stagger location has 0 stagger padding in all dimensions, whereas the edge stagger location lower padding is equal to gridEdgeLWidth and the upper padding is equal to gridEdgeUWidth in one dimension, but both are 0 in the other, centered, dimension. If the user wishes to set the stagger padding individually for each stagger location they may use the staggerEdgeWidth and staggerAlign arguments.

The staggerEdgeLWidth and staggerEdgeUWidth arguments are both 1D arrays of the same size as the Grid dimension. The entries in the arrays give the extra offset from the Grid cell index space for a stagger location. The following example shows the addition of two stagger locations. The corner location has no extra boundary and the center has a single layer of extra padding on the negative side and none on the positive. This is the reverse of the default behavior.

```
grid2D=ESMF_GridCreate(distgrid=distgrid2D, &
         gridEdgeLWidth=(/1,1/), gridEdgeUWidth=(/0,0/), rc=rc)



call ESMF_GridAddCoord(grid2D, &
       staggerLoc=ESMF_STAGGERLOC_CORNER, &
       staggerEdgeLWidth=(/0,0/), staggerEdgeUWidth=(/0,0/), rc=rc)



call ESMF_GridAddCoord(grid2D, &
       staggerLoc=ESMF_STAGGERLOC_CENTER, &
       staggerEdgeLWidth=(/1,1/), staggerEdgeUWidth=(/0,0/), rc=rc)
```

To indicate how the data at a particular stagger location is aligned with the cell center, the optional staggerAlign parameter may be used. This parameter indicates which stagger elements in a cell share the same index values as the cell center. For example, in a 2D cell, it would indicate which of the four corners has the same index value as the center. To set staggerAlign, the values -1,+1 are used to indicate the alignment in each dimension. If a stagger location is centered in a dimension (e.g. an edge in 2D), then that dimension is ignored in the alignment. This parameter is mostly informational, however, if the staggerEdgeWidth parameters are not set then its value determines where the default padding is placed. If not specified, then the default is to align all staggers to the most negative, so the padding is on the positive side. The following code illustrates aligning the positive (northeast in 2D) corner with the center.

```
call ESMF_GridAddCoord(grid2D, &
       staggerLoc=ESMF_STAGGERLOC_CORNER, staggerAlign=(/1,1/), rc=rc)
```

32.4 Restrictions and Future Work

- **Grids with factorized coordinates can only be redisted when they are 2D.** Using the ESMF_GridCreate() interface that allows the user to create a copy of an existing Grid with a new distribution will give incorrect results when used on a Grid with 3 or more dimensions and whose coordinate arrays are less than the full dimension of the Grid (i.e. it contains factorized coordinates).
- **7D limit.** Only grids up to 7D will be supported.
- **Future adaptation.** Currently Grids are created and then remain unchanged. In the future, it would be useful to provide support for the various forms of grid adaptation. This would allow the grids to dynamically change their resolution to more closely match what is needed at a particular time and position during a computation for front tracking or adaptive meshes.
- **Future Grid generation.** This class for now only contains the basic functionality for operating on the grid. In the future methods will be added to enable the automatic generation of various types of grids.

32.5 Design and Implementation Notes

32.5.1 Grid Topology

The `ESMF_Grid` class depends upon the `ESMF_DistGrid` class for the specification of its topology. That is, when creating a Grid, first an `ESMF_DistGrid` is created to describe the appropriate index space topology. This decision was made because it seemed redundant to have a system for doing this in both classes. It also seems most appropriate for the machinary for topology creation to be located at the lowest level possible so that it can be used by other classes (e.g. the `ESMF_Array` class). Because of this, however, the authors recommend that as a natural part of the implementation of subroutines to generate standard grid shapes (e.g. `ESMF_GridGenSphere`) a set of standard topology generation subroutines be implemented (e.g. `ESMF_DistGridGenSphere`) for users who want to create a standard topology, but a custom geometry.

32.6 Class API: General Grid Methods

32.6.1 ESMF_GridAssignment(=) - Grid assignment

INTERFACE:

```
interface assignment(=)
grid1 = grid2
```

ARGUMENTS:

```
type(ESMF_Grid) :: grid1
type(ESMF_Grid) :: grid2
```

STATUS:

- This interface is backward compatible with ESMF versions starting at 5.2.0r. If code using this interface compiles with any version of ESMF starting with 5.2.0r, then it will compile with the current version.

DESCRIPTION:

Assign grid1 as an alias to the same ESMF Grid object in memory as grid2. If grid2 is invalid, then grid1 will be equally invalid after the assignment.

The arguments are:

grid1 The `ESMF_Grid` object on the left hand side of the assignment.

grid2 The `ESMF_Grid` object on the right hand side of the assignment.

32.6.2 ESMF_GridOperator(==) - Grid equality operator

INTERFACE:

```
interface operator(==)
  if (grid1 == grid2) then ... endif
            OR
  result = (grid1 == grid2)
```

RETURN VALUE:

```
logical :: result
```

ARGUMENTS:

```
type(ESMF_Grid), intent(in) :: grid1
type(ESMF_Grid), intent(in) :: grid2
```

STATUS:

- This interface is backward compatible with ESMF versions starting at 5.2.0r. If code using this interface compiles with any version of ESMF starting with 5.2.0r, then it will compile with the current version.

DESCRIPTION:

Test whether grid1 and grid2 are valid aliases to the same ESMF Grid object in memory. For a more general comparison of two ESMF Grids, going beyond the simple alias test, the ESMF_GridMatch() function must be used.

The arguments are:

grid1 The `ESMF_Grid` object on the left hand side of the equality operation.

grid2 The `ESMF_Grid` object on the right hand side of the equality operation.

32.6.3 ESMF_GridOperator(/=) - Grid not equal operator

INTERFACE:

```
interface operator(/=)
  if (grid1 /= grid2) then ... endif
            OR
  result = (grid1 /= grid2)
```

RETURN VALUE:

```
logical :: result
```

ARGUMENTS:

```
type(ESMF_Grid), intent(in) :: grid1
type(ESMF_Grid), intent(in) :: grid2
```

STATUS:

- This interface is backward compatible with ESMF versions starting at 5.2.0r. If code using this interface compiles with any version of ESMF starting with 5.2.0r, then it will compile with the current version.

DESCRIPTION:

Test whether grid1 and grid2 are *not* valid aliases to the same ESMF Grid object in memory. For a more general comparison of two ESMF Grids, going beyond the simple alias test, the ESMF_GridMatch() function (not yet fully implemented) must be used.

The arguments are:

grid1 The `ESMF_Grid` object on the left hand side of the non-equality operation.

grid2 The `ESMF_Grid` object on the right hand side of the non-equality operation.

32.6.4 ESMF_GridAddCoord - Allocate coordinate arrays but don't set their values

INTERFACE:

```
! Private name; call using ESMF_GridAddCoord()
   subroutine ESMF_GridAddCoordNoValues(grid, staggerloc,  &
     staggerEdgeLWidth, staggerEdgeUWidth, staggerAlign, &
     staggerLBound,rc)
```

ARGUMENTS:

```
      type(ESMF_Grid),        intent(in)            :: grid
-- The following arguments require argument keyword syntax (e.g. rc=rc). --
      type (ESMF_StaggerLoc), intent(in),  optional :: staggerloc
      integer,                intent(in),  optional :: staggerEdgeLWidth(:)
      integer,                intent(in),  optional :: staggerEdgeUWidth(:)
      integer,                intent(in),  optional :: staggerAlign(:)
      integer,                intent(in),  optional :: staggerLBound(:)
      integer,                intent(out), optional :: rc
```

STATUS:

- This interface is backward compatible with ESMF versions starting at 5.2.0r. If code using this interface compiles with any version of ESMF starting with 5.2.0r, then it will compile with the current version.

DESCRIPTION:

When a Grid is created all of its potential stagger locations can hold coordinate data, but none of them have storage allocated. This call allocates coordinate storage (creates internal ESMF_Arrays and associated memory) for a particular stagger location. Note that this call doesn't assign any values to the storage, it only allocates it. The remaining options `staggerEdgeLWidth`, etc. allow the user to adjust the padding on the coordinate arrays.

The arguments are:

grid Grid to allocate coordinate storage in.

[staggerloc] The stagger location to add. Please see Section 32.2.6 for a list of predefined stagger locations. If not present, defaults to ESMF_STAGGERLOC_CENTER.

[staggerEdgeLWidth] This array should be the same dimCount as the grid. It specifies the lower corner of the stagger region with respect to the lower corner of the exclusive region.

[staggerEdgeUWidth] This array should be the same dimCount as the grid. It specifies the upper corner of the stagger region with respect to the upper corner of the exclusive region.

[staggerAlign] This array is of size grid dimCount. For this stagger location, it specifies which element has the same index value as the center. For example, for a 2D cell with corner stagger it specifies which of the 4 corners has the same index as the center. If this is set and either staggerEdgeUWidth or staggerEdgeLWidth is not, this determines the default array padding for a stagger. If not set, then this defaults to all negative. (e.g. The most negative part of the stagger in a cell is aligned with the center and the padding is all on the positive side.)

[staggerLBound] Specifies the lower index range of the memory of every DE in this staggerloc in this Grid. Only used when Grid indexflag is `ESMF_INDEX_USER`.

[rc] Return code; equals `ESMF_SUCCESS` if there are no errors.

32.6.5 ESMF_GridAddItem - Allocate item array but don't set their values

INTERFACE:

```
! Private name; call using ESMF_GridAddItem()
   subroutine ESMF_GridAddItemNoValues(grid, itemflag,  &
     staggerloc, itemTypeKind, staggerEdgeLWidth, staggerEdgeUWidth, &
     staggerAlign, staggerLBound,rc)
```

ARGUMENTS:

```
      type(ESMF_Grid),          intent(in)           :: grid
      type (ESMF_GridItem_Flag),intent(in)           :: itemflag
 -- The following arguments require argument keyword syntax (e.g. rc=rc). --
      type (ESMF_StaggerLoc)  , intent(in), optional :: staggerloc
      type (ESMF_TypeKind_Flag),intent(in), optional :: itemTypeKind
      integer,                  intent(in), optional :: staggerEdgeLWidth(:)
      integer,                  intent(in), optional :: staggerEdgeUWidth(:)
      integer,                  intent(in), optional :: staggerAlign(:)
      integer,                  intent(in), optional :: staggerLBound(:)
      integer,                  intent(out),optional :: rc
```

STATUS:

- This interface is backward compatible with ESMF versions starting at 5.2.0r. If code using this interface compiles with any version of ESMF starting with 5.2.0r, then it will compile with the current version.

DESCRIPTION:

When a Grid is created all of its potential stagger locations can hold item data, but none of them have storage allocated. This call allocates item storage (creates an internal ESMF_Array and associated memory) for a particular stagger location. Note that this call doesn't assign any values to the storage, it only allocates it. The remaining options `staggerEdgeLWidth`, etc. allow the user to adjust the padding on the item array.

The arguments are:

grid Grid to allocate coordinate storage in.

itemflag The grid item to add. Please see Section 32.2.2 for a list of valid items.

[staggerloc] The stagger location to add. Please see Section 32.2.6 for a list of predefined stagger locations. If not present, defaults to ESMF_STAGGERLOC_CENTER.

[itemTypeKind] The typekind of the item to add.

[staggerEdgeLWidth] This array should be the same dimCount as the grid. It specifies the lower corner of the stagger region with respect to the lower corner of the exclusive region.

[staggerEdgeUWidth] This array should be the same dimCount as the grid. It specifies the upper corner of the stagger region with respect to the upper corner of the exclusive region.

[staggerAlign] This array is of size grid dimCount. For this stagger location, it specifies which element has the same index value as the center. For example, for a 2D cell with corner stagger it specifies which of the 4 corners has the same index as the center. If this is set and either staggerEdgeUWidth or staggerEdgeLWidth is not, this determines the default array padding for a stagger. If not set, then this defaults to all negative. (e.g. The most negative part of the stagger in a cell is aligned with the center and the padding is all on the positive side.)

[staggerLBound] Specifies the lower index range of the memory of every DE in this staggerloc in this Grid. Only used when Grid indexflag is `ESMF_INDEX_USER`.

[rc] Return code; equals `ESMF_SUCCESS` if there are no errors.

32.6.6 ESMF_GridCreate - Create a copy of a Grid with a new DistGrid

INTERFACE:

```
! Private name; call using ESMF_GridCreate()
    function ESMF_GridCreateCopyFromNewDG(grid, distgrid, &
      name, copyAttributes, routehandle, rc)
```

RETURN VALUE:

```
    type(ESMF_Grid) :: ESMF_GridCreateCopyFromNewDG
```

ARGUMENTS:

```
     type(ESMF_Grid),       intent(in)              :: grid
     type(ESMF_DistGrid),   intent(in)              :: distgrid
-- The following arguments require argument keyword syntax (e.g. rc=rc). --
     character (len=*),     intent(in),   optional  :: name
     logical,               intent(in),   optional  :: copyAttributes
     type(ESMF_RouteHandle),intent(out),  optional  :: routehandle
     integer,               intent(out),  optional  :: rc
```

STATUS:

- This interface is backward compatible with ESMF versions starting at 5.2.0r. If code using this interface compiles with any version of ESMF starting with 5.2.0r, then it will compile with the current version.
- This interface was modified since ESMF version 5.2.0r. The fact that code using this interface compiles with the current ESMF version does not guarantee that it compiles with previous versions of this interface. If user code compatibility with version 5.2.0r is desired then care must be taken to limit the use of this interface to features that were available in the 5.2.0r release.
  Changes made after the 5.2.0r release:

  7.1.0r Added argument `copyAttributes` to support attribute propagation from the existing to the newly created grid object.

  8.2.1 Added argument `routehandle` providing the user with a convenient way to execute `ESMF_GridRedist()` repeatedly, e.g. when coordinates on the source grid have changed.

DESCRIPTION:

This call allows the user to copy an existing ESMF Grid, but with a new distribution. All internal data from the old Grid (coords, items) are redistributed to the new Grid.

The arguments are:

grid The existing `ESMF_Grid` being redistributed, i.e. the "source" grid.

distgrid `ESMF_DistGrid` object which describes how the newly created Grid is decomposed and distributed.

[name] Name of the new Grid. If not specified, a new unique name will be created for the Grid.

[copyAttributes] A flag to indicate whether to copy the attributes of the existing grid to the new grid. The default value is .false..

[routehandle] If provided holds the mapping of coordinates between the two grids. This can be used in the companion method `ESMF_GridRedist()` to update coordinates.

[rc] Return code; equals `ESMF_SUCCESS` if there are no errors.

32.6.7 ESMF_GridCreate - Create a copy of a Grid with a different regular distribution

INTERFACE:

```
! Private name; call using ESMF_GridCreate()
    function ESMF_GridCreateCopyFromReg(grid, &
      regDecomp, decompFlag, name, copyAttributes, rc)
```

RETURN VALUE:

```
    type(ESMF_Grid) :: ESMF_GridCreateCopyFromReg
```

ARGUMENTS:

```
     type(ESMF_Grid),        intent(in)              :: grid
-- The following arguments require argument keyword syntax (e.g. rc=rc). --
     integer,                intent(in),   optional  :: regDecomp(:)
     type(ESMF_Decomp_Flag), intent(in),   optional  :: decompflag(:)
     character (len=*),      intent(in),   optional  :: name
     logical,                intent(in),   optional  :: copyAttributes
     integer,                intent(out),  optional  :: rc
```

STATUS:

- This interface is backward compatible with ESMF versions starting at 5.2.0r. If code using this interface compiles with any version of ESMF starting with 5.2.0r, then it will compile with the current version.
- This interface was modified since ESMF version 5.2.0r. The fact that code using this interface compiles with the current ESMF version does not guarantee that it compiles with previous versions of this interface. If user code compatibility with version 5.2.0r is desired then care must be taken to limit the use of this interface to features that were available in the 5.2.0r release.
  Changes made after the 5.2.0r release:

  7.1.0r Added argument `copyAttributes` to support attribute propagation from the existing to the newly created grid object.

DESCRIPTION:

This method creates a copy of an existing Grid, the new Grid is regularly distributed (see Figure 13). To specify the new distribution, the user passes in an array (`regDecomp`) specifying the number of DEs to divide each dimension

into. The array `decompFlag` indicates how the division into DEs is to occur. The default is to divide the range as evenly as possible.

The arguments are:

grid `ESMF_Grid` to copy.

[regDecomp] List that has the same number of elements as `maxIndex`. Each entry is the number of decounts for that dimension. If not specified, the default decomposition will be petCountx1x1..x1.

[decompflag] List of decomposition flags indicating how each dimension of the tile is to be divided between the DEs. The default setting is `ESMF_DECOMP_BALANCED` in all dimensions. Please see Section 55.14 for a full description of the possible options. Note that currently the option `ESMF_DECOMP_CYCLIC` isn't supported in Grid creation.

[name] Name of the new Grid. If not specified, a new unique name will be created for the Grid.

[copyAttributes] A flag to indicate whether to copy the attributes of the existing grid to the new grid. The default value is .false..

[rc] Return code; equals `ESMF_SUCCESS` if there are no errors.

32.6.8 ESMF_GridCreate - Create a Grid with user set edge connections and an irregular distribution

INTERFACE:

```
! Private name; call using ESMF_GridCreate()
    function ESMF_GridCreateEdgeConnI(minIndex,         &
      countsPerDEDim1,countsPerDeDim2,                  &
      countsPerDEDim3,                                  &
      connflagDim1, connflagDim2, connflagDim3,         &
      coordSys, coordTypeKind,                          &
      coordDep1, coordDep2, coordDep3,                  &
      gridEdgeLWidth, gridEdgeUWidth, gridAlign,        &
      gridMemLBound, indexflag, petMap, name, rc)
```

RETURN VALUE:

```
    type(ESMF_Grid) :: ESMF_GridCreateEdgeConnI
```

ARGUMENTS:

```
     integer,                  intent(in),  optional :: minIndex(:)
     integer,                  intent(in)            :: countsPerDEDim1(:)
     integer,                  intent(in)            :: countsPerDEDim2(:)
-- The following arguments require argument keyword syntax (e.g. rc=rc). --
     integer,                  intent(in),  optional :: countsPerDEDim3(:)
     type(ESMF_GridConn_Flag), intent(in),  optional :: connflagDim1(:)
     type(ESMF_GridConn_Flag), intent(in),  optional :: connflagDim2(:)
     type(ESMF_GridConn_Flag), intent(in),  optional :: connflagDim3(:)
     type(ESMF_CoordSys_Flag), intent(in),  optional :: coordSys
```

```
type(ESMF_TypeKind_Flag), intent(in),  optional :: coordTypeKind
integer,                  intent(in),  optional :: coordDep1(:)
integer,                  intent(in),  optional :: coordDep2(:)
integer,                  intent(in),  optional :: coordDep3(:)
integer,                  intent(in),  optional :: gridEdgeLWidth(:)
integer,                  intent(in),  optional :: gridEdgeUWidth(:)
integer,                  intent(in),  optional :: gridAlign(:)
integer,                  intent(in),  optional :: gridMemLBound(:)
type(ESMF_Index_Flag),    intent(in),  optional :: indexflag
integer,                  intent(in),  optional :: petMap(:,:,:)
character (len=*),        intent(in),  optional :: name
integer,                  intent(out), optional :: rc
```

DESCRIPTION:

This method creates a single tile, irregularly distributed grid (see Figure 13). To specify the irregular distribution, the user passes in an array for each grid dimension, where the length of the array is the number of DEs in the dimension. Currently this call only supports creating 2D or 3D Grids. A 2D Grid can be specified using the countsPerDEDim1 and countsPerDEDim2 arguments. A 3D Grid can be specified by also using the optional countsPerDEDim3 argument. The index of each array element in these arguments corresponds to a DE number. The array value at the index is the number of grid cells on the DE in that dimension.

Section 32.3.4 shows an example of using this method to create a 2D Grid with uniformly spaced coordinates. This creation method can also be used as the basis for grids with rectilinear coordinates or curvilinear coordinates.

The arguments are:

[minIndex] Tuple to start the index ranges at. If not present, defaults to /1,1,1,.../.

countsPerDEDim1 This arrays specifies the number of cells per DE for index dimension 1 for the exclusive region (the center stagger location).

countsPerDEDim2 This array specifies the number of cells per DE for index dimension 2 for the exclusive region (center stagger location).

[countsPerDEDim3] This array specifies the number of cells per DE for index dimension 3 for the exclusive region (center stagger location). If not specified then grid is 2D.

[connflagDim1] Fortran array describing the index dimension 1 connections. The first element represents the minimum end of dimension 1. The second element represents the maximum end of dimension 1. If array is only one element long, then that element is used for both the minimum and maximum end. Please see Section 32.2.1 for a list of valid options. If not present, defaults to ESMF_GRIDCONN_NONE.

[connflagDim2] Fortran array describing the index dimension 2 connections. The first element represents the minimum end of dimension 2. The second element represents the maximum end of dimension 2. If array is only one element long, then that element is used for both the minimum and maximum end. Please see Section 32.2.1 for a list of valid options. If not present, defaults to ESMF_GRIDCONN_NONE.

[connflagDim3] Fortran array describing the index dimension 3 connections. The first element represents the minimum end of dimension 3. The second element represents the maximum end of dimension 3. If array is only one element long, then that element is used for both the minimum and maximum end. Please see Section 32.2.1 for a list of valid options. If not present, defaults to ESMF_GRIDCONN_NONE.

[coordSys] The coordinate system of the grid coordinate data. For a full list of options, please see Section 55.11. If not specified then defaults to ESMF_COORDSYS_SPH_DEG.

[coordTypeKind] The type/kind of the grid coordinate data. All *numerical* types listed under section 55.61 are supported. If not specified then defaults to ESMF_TYPEKIND_R8.

[coordDep1] This array specifies the dependence of the first coordinate component on the three index dimensions described by `coordsPerDEDim1,2,3`. The size of the array specifies the number of dimensions of the first coordinate component array. The values specify which of the index dimensions the corresponding coordinate arrays map to. If not present the default is 1,2,...,grid rank.

[coordDep2] This array specifies the dependence of the second coordinate component on the three index dimensions described by `coordsPerDEDim1,2,3`. The size of the array specifies the number of dimensions of the second coordinate component array. The values specify which of the index dimensions the corresponding coordinate arrays map to. If not present the default is 1,2,...,grid rank.

[coordDep3] This array specifies the dependence of the third coordinate component on the three index dimensions described by `coordsPerDEDim1,2,3`. The size of the array specifies the number of dimensions of the third coordinate component array. The values specify which of the index dimensions the corresponding coordinate arrays map to. If not present the default is 1,2,...,grid rank.

[gridEdgeLWidth] The padding around the lower edges of the grid. This padding is between the index space corresponding to the cells and the boundary of the the exclusive region. This extra space is to contain the extra padding for non-center stagger locations, and should be big enough to hold any stagger in the grid. If this and gridAlign are not present then defaults to 0, 0, ..., 0 (all zeros).

[gridEdgeUWidth] The padding around the upper edges of the grid. This padding is between the index space corresponding to the cells and the boundary of the the exclusive region. This extra space is to contain the extra padding for non-center stagger locations, and should be big enough to hold any stagger in the grid. If this and gridAlign are not present then defaults to 1, 1, ..., 1 (all ones).

[gridAlign] Specification of how the stagger locations should align with the cell index space (can be overridden by the individual staggerAligns). If the gridEdgeWidths are not specified than this argument implies the gridEdgeWidths. If the gridEdgeWidths are specified and this argument isn't then this argument is implied by the gridEdgeWidths. If this and the gridEdgeWidths are not specified, then defaults to -1, -1, ..., -1 (all negative ones).

[gridMemLBound] Specifies the lower index range of the memory of every DE in this Grid. Only used when indexflag is `ESMF_INDEX_USER`. May be overridden by staggerMemLBound.

[indexflag] Indicates the indexing scheme to be used in the new Grid. Please see Section 55.29 for the list of options. If not present, defaults to ESMF_INDEX_DELOCAL.

[petMap] Sets the mapping of pets to the created DEs. This 3D should be of size size(countsPerDEDim1) x size(countsPerDEDim2) x size(countsPerDEDim3). If countsPerDEDim3 isn't present, then the last dimension is of size 1.

[name] `ESMF_Grid` name.

[rc] Return code; equals `ESMF_SUCCESS` if there are no errors.

32.6.9 ESMF_GridCreate - Create a Grid with user set edge connections and a regular distribution

INTERFACE:

```
! Private name; call using ESMF_GridCreate()
    function ESMF_GridCreateEdgeConnR(regDecomp, decompFlag, &
      minIndex, maxIndex,                                    &
      connflagDim1, connflagDim2, connflagDim3,                          &
      coordSys, coordTypeKind,                          &
```

```
coordDep1, coordDep2, coordDep3,                    &
gridEdgeLWidth, gridEdgeUWidth, gridAlign,          &
gridMemLBound, indexflag, petMap, name, rc)
```

RETURN VALUE:

```
type(ESMF_Grid) :: ESMF_GridCreateEdgeConnR
```

ARGUMENTS:

```
        integer,                  intent(in),  optional :: regDecomp(:)
        type(ESMF_Decomp_Flag),   intent(in),  optional :: decompflag(:)
        integer,                  intent(in),  optional :: minIndex(:)
        integer,                  intent(in)            :: maxIndex(:)
 -- The following arguments require argument keyword syntax (e.g. rc=rc). --
        type(ESMF_GridConn_Flag), intent(in),  optional :: connflagDim1(:)
        type(ESMF_GridConn_Flag), intent(in),  optional :: connflagDim2(:)
        type(ESMF_GridConn_Flag), intent(in),  optional :: connflagDim3(:)
        type(ESMF_CoordSys_Flag), intent(in),  optional :: coordSys
        type(ESMF_TypeKind_Flag), intent(in),  optional :: coordTypeKind
        integer,                  intent(in),  optional :: coordDep1(:)
        integer,                  intent(in),  optional :: coordDep2(:)
        integer,                  intent(in),  optional :: coordDep3(:)
        integer,                  intent(in),  optional :: gridEdgeLWidth(:)
        integer,                  intent(in),  optional :: gridEdgeUWidth(:)
        integer,                  intent(in),  optional :: gridAlign(:)
        integer,                  intent(in),  optional :: gridMemLBound(:)
        type(ESMF_Index_Flag),    intent(in),  optional :: indexflag
        integer,                  intent(in),  optional :: petMap(:,:,:)
        character (len=*),        intent(in),  optional :: name
        integer,                  intent(out), optional :: rc
```

DESCRIPTION:

This method creates a single tile, regularly distributed grid (see Figure 13). To specify the distribution, the user passes in an array (`regDecomp`) specifying the number of DEs to divide each dimension into. The array `decompFlag` indicates how the division into DEs is to occur. The default is to divide the range as evenly as possible. Currently this call only supports creating a 2D or 3D Grid, and thus, for example, `maxIndex` must be of size 2 or 3.

The arguments are:

[regDecomp] List that has the same number of elements as `maxIndex`. Each entry is the number of decounts for that dimension. If not specified, the default decomposition will be petCountx1x1..x1.

[decompflag] List of decomposition flags indicating how each dimension of the tile is to be divided between the DEs. The default setting is `ESMF_DECOMP_BALANCED` in all dimensions. Please see Section 55.14 for a full description of the possible options. Note that currently the option `ESMF_DECOMP_CYCLIC` isn't supported in Grid creation.

[minIndex] The bottom extent of the grid array. If not given then the value defaults to /1,1,1,.../.

maxIndex The upper extent of the grid array.

[connflagDim1] Fortran array describing the index dimension 1 connections. The first element represents the minimum end of dimension 1. The second element represents the maximum end of dimension 1. If array is only one element long, then that element is used for both the minimum and maximum end. Please see Section 32.2.1 for a list of valid options. If not present, defaults to ESMF_GRIDCONN_NONE.

[connflagDim2] Fortran array describing the index dimension 2 connections. The first element represents the minimum end of dimension 2. The second element represents the maximum end of dimension 2. If array is only one element long, then that element is used for both the minimum and maximum end. Please see Section 32.2.1 for a list of valid options. If not present, defaults to ESMF_GRIDCONN_NONE.

[connflagDim3] Fortran array describing the index dimension 3 connections. The first element represents the minimum end of dimension 3. The second element represents the maximum end of dimension 3. If array is only one element long, then that element is used for both the minimum and maximum end. Please see Section 32.2.1 for a list of valid options. If not present, defaults to ESMF_GRIDCONN_NONE.

[coordSys] The coordinate system of the grid coordinate data. For a full list of options, please see Section 55.11. If not specified then defaults to ESMF_COORDSYS_SPH_DEG.

[coordTypeKind] The type/kind of the grid coordinate data. All *numerical* types listed under section 55.61 are supported. If not specified then defaults to ESMF_TYPEKIND_R8.

[coordDep1] This array specifies the dependence of the first coordinate component on the three index dimensions described by `coordsPerDEDim1,2,3`. The size of the array specifies the number of dimensions of the first coordinate component array. The values specify which of the index dimensions the corresponding coordinate arrays map to. If not present the default is 1,2,...,grid rank.

[coordDep2] This array specifies the dependence of the second coordinate component on the three index dimensions described by `coordsPerDEDim1,2,3`. The size of the array specifies the number of dimensions of the second coordinate component array. The values specify which of the index dimensions the corresponding coordinate arrays map to. If not present the default is 1,2,...,grid rank.

[coordDep3] This array specifies the dependence of the third coordinate component on the three index dimensions described by `coordsPerDEDim1,2,3`. The size of the array specifies the number of dimensions of the third coordinate component array. The values specify which of the index dimensions the corresponding coordinate arrays map to. If not present the default is 1,2,...,grid rank.

[gridEdgeLWidth] The padding around the lower edges of the grid. This padding is between the index space corresponding to the cells and the boundary of the the exclusive region. This extra space is to contain the extra padding for non-center stagger locations, and should be big enough to hold any stagger in the grid. If this and gridAlign are not present then defaults to 0, 0, ..., 0 (all zeros).

[gridEdgeUWidth] The padding around the upper edges of the grid. This padding is between the index space corresponding to the cells and the boundary of the the exclusive region. This extra space is to contain the extra padding for non-center stagger locations, and should be big enough to hold any stagger in the grid. If this and gridAlign are not present then defaults to 1, 1, ..., 1 (all ones).

[gridAlign] Specification of how the stagger locations should align with the cell index space (can be overridden by the individual staggerAligns). If the gridEdgeWidths are not specified than this argument implies the gridEdgeWidths. If the gridEdgeWidths are specified and this argument isn't then this argument is implied by the gridEdgeWidths. If this and the gridEdgeWidths are not specified, then defaults to -1, -1, ..., -1 (all negative ones).

[gridMemLBound] Specifies the lower index range of the memory of every DE in this Grid. Only used when indexflag is `ESMF_INDEX_USER`. May be overridden by staggerMemLBound.

[indexflag] Indicates the indexing scheme to be used in the new Grid. Please see Section 55.29 for the list of options. If not present, defaults to ESMF_INDEX_DELOCAL.

[petMap] Sets the mapping of pets to the created DEs. This 3D should be of size regDecomp(1) x regDecomp(2) x regDecomp(3) If the Grid is 2D, then the last dimension is of size 1.

[name] `ESMF_Grid` name.

[rc] Return code; equals `ESMF_SUCCESS` if there are no errors.

32.6.10 ESMF_GridCreate - Create a Grid with user set edge connections and an arbitrary distribution

INTERFACE:

```
! Private name; call using ESMF_GridCreate()
    function ESMF_GridCreateEdgeConnA(minIndex, maxIndex,  &
      arbIndexCount, arbIndexList,                         &
      connflagDim1, connflagDim2, connflagDim3,                    &
      coordSys, coordTypeKind,                        &
      coordDep1, coordDep2, coordDep3,                &
      distDim, name, rc)
```

RETURN VALUE:

```
    type(ESMF_Grid) :: ESMF_GridCreateEdgeConnA
```

ARGUMENTS:

```
      integer,                  intent(in),  optional :: minIndex(:)
      integer,                  intent(in)            :: maxIndex(:)
      integer,                  intent(in)            :: arbIndexCount
      integer,                  intent(in)            :: arbIndexList(:,:)
-- The following arguments require argument keyword syntax (e.g. rc=rc). --
      type(ESMF_GridConn_Flag), intent(in),  optional :: connflagDim1(:)
      type(ESMF_GridConn_Flag), intent(in),  optional :: connflagDim2(:)
      type(ESMF_GridConn_Flag), intent(in),  optional :: connflagDim3(:)
      type(ESMF_CoordSys_Flag), intent(in),  optional :: coordSys
      type(ESMF_TypeKind_Flag), intent(in),  optional :: coordTypeKind
      integer,                  intent(in),  optional :: coordDep1(:)
      integer,                  intent(in),  optional :: coordDep2(:)
      integer,                  intent(in),  optional :: coordDep3(:)
      integer,                  intent(in),  optional :: distDim(:)
      character (len=*),        intent(in),  optional :: name
      integer,                  intent(out), optional :: rc
```

DESCRIPTION:

This method creates a single tile, arbitrarily distributed grid (see Figure 13). To specify the arbitrary distribution, the user passes in an 2D array of local indices, where the first dimension is the number of local grid cells specified by `localArbIndexCount` and the second dimension is the number of distributed dimensions.

`distDim` specifies which grid dimensions are arbitrarily distributed. The size of `distDim` has to agree with the size of the second dimension of `localArbIndex`.

Currently this call only supports creating a 2D or 3D Grid, and thus, for example, `maxIndex` must be of size 2 or 3.

The arguments are:

[minIndex] Tuple to start the index ranges at. If not present, defaults to /1,1,1,.../.

maxIndex The upper extend of the grid index ranges.

arbIndexCount The number of grid cells in the local DE. It is okay to have 0 grid cell in a local DE.

arbIndexList This 2D array specifies the indices of the PET LOCAL grid cells. The dimensions should be arbIndexCount * number of Distributed grid dimensions where arbIndexCount is the input argument specified below

[connflagDim1] Fortran array describing the index dimension 1 connections. The first element represents the minimum end of dimension 1. The second element represents the maximum end of dimension 1. If array is only one element long, then that element is used for both the minimum and maximum end. Please see Section 32.2.1 for a list of valid options. If not present, defaults to ESMF_GRIDCONN_NONE.

[connflagDim2] Fortran array describing the index dimension 2 connections. The first element represents the minimum end of dimension 2. The second element represents the maximum end of dimension 2. If array is only one element long, then that element is used for both the minimum and maximum end. Please see Section 32.2.1 for a list of valid options. If not present, defaults to ESMF_GRIDCONN_NONE.

[connflagDim3] Fortran array describing the index dimension 3 connections. The first element represents the minimum end of dimension 3. The second element represents the maximum end of dimension 3. If array is only one element long, then that element is used for both the minimum and maximum end. Please see Section 32.2.1 for a list of valid options. If not present, defaults to ESMF_GRIDCONN_NONE.

[coordSys] The coordinate system of the grid coordinate data. For a full list of options, please see Section 55.11. If not specified then defaults to ESMF_COORDSYS_SPH_DEG.

[coordTypeKind] The type/kind of the grid coordinate data. All *numerical* types listed under section 55.61 are supported. If not specified then defaults to ESMF_TYPEKIND_R8.

[coordDep1] The size of the array specifies the number of dimensions of the first coordinate component array. The values specify which of the index dimensions the corresponding coordinate arrays map to. The format should be /ESMF_DIM_ARB/ where /ESMF_DIM_ARB/ is mapped to the collapsed 1D dimension from all the arbitrarily distributed dimensions. n is the dimension that is not distributed (if exists). If not present the default is /ESMF_DIM_ARB/ if the first dimension is arbitararily distributed, or /n/ if not distributed (i.e. n=1) Please see Section 55.2 for a definition of ESMF_DIM_ARB.

[coordDep2] The size of the array specifies the number of dimensions of the second coordinate component array. The values specify which of the index dimensions the corresponding coordinate arrays map to. The format should be /ESMF_DIM_ARB/ where /ESMF_DIM_ARB/ is mapped to the collapsed 1D dimension from all the arbitrarily distributed dimensions. n is the dimension that is not distributed (if exists). If not present the default is /ESMF_DIM_ARB/ if this dimension is arbitararily distributed, or /n/ if not distributed (i.e. n=2) Please see Section 55.2 for a definition of ESMF_DIM_ARB.

[coordDep3] The size of the array specifies the number of dimensions of the third coordinate component array. The values specify which of the index dimensions the corresponding coordinate arrays map to. The format should be /ESMF_DIM_ARB/ where /ESMF_DIM_ARB/ is mapped to the collapsed 1D dimension from all the arbitrarily distributed dimensions. n is the dimension that is not distributed (if exists). If not present the default is /ESMF_DIM_ARB/ if this dimension is arbitararily distributed, or /n/ if not distributed (i.e. n=3) Please see Section 55.2 for a definition of ESMF_DIM_ARB.

[distDim] This array specifies which dimensions are arbitrarily distributed. The size of the array specifies the total distributed dimensions. if not specified, defaults is all dimensions will be arbitrarily distributed. The size has to agree with the size of the second dimension of `localArbIndex`.

[name] `ESMF_Grid` name.

[rc] Return code; equals `ESMF_SUCCESS` if there are no errors.

32.6.11 ESMF_GridCreate - Create a Grid from a DistGrid

INTERFACE:

```
! Private name; call using ESMF_GridCreate()
    function ESMF_GridCreateFrmDistGrid(distgrid, &
      distgridToGridMap, &
      coordSys, coordTypeKind, coordDimCount, coordDimMap, &
      gridEdgeLWidth, gridEdgeUWidth, gridAlign, &
      gridMemLBound, indexflag, name, vm, rc)
```

RETURN VALUE:

```
type(ESMF_Grid) :: ESMF_GridCreateFrmDistGrid
```

ARGUMENTS:

```
type(ESMF_DistGrid),      intent(in)            :: distgrid
integer,                  intent(in),  optional :: distgridToGridMap(:)
type(ESMF_CoordSys_Flag),intent(in),  optional :: coordSys
type(ESMF_TypeKind_Flag),intent(in),  optional :: coordTypeKind
integer,                  intent(in),  optional :: coordDimCount(:)
integer,                  intent(in),  optional :: coordDimMap(:,:)
integer,                  intent(in),  optional :: gridEdgeLWidth(:)
integer,                  intent(in),  optional :: gridEdgeUWidth(:)
integer,                  intent(in),  optional :: gridAlign(:)
integer,                  intent(in),  optional :: gridMemLBound(:)
type(ESMF_Index_Flag),    intent(in),  optional :: indexflag
character (len=*),        intent(in),  optional :: name
type(ESMF_VM),            intent(in),  optional :: vm
integer,                  intent(out), optional :: rc
```

DESCRIPTION:

This is the most general form of creation for an `ESMF_Grid` object. It allows the user to fully specify the topology and index space using the DistGrid methods and then build a grid out of the resulting DistGrid. Note that since the Grid created by this call uses `distgrid` as a description of its index space, the resulting Grid will have exactly the same number of dimensions (i.e. the same dimCount) as `distgrid`. The `distgridToGridMap` argument specifies how the Grid dimensions are mapped to the `distgrid`. The `coordDimCount` and `coordDimMap` arguments allow the user to specify how the coordinate arrays should map to the grid dimensions. (Note, though, that creating a grid does not allocate coordinate storage. A method such as `ESMF_GridAddCoord()` must be called before adding coordinate values.)

The arguments are:

distgrid `ESMF_DistGrid` object that describes how the array is decomposed and distributed over DEs.

[distgridToGridMap] List that has dimCount elements. The elements map each dimension of distgrid to a dimension in the grid. (i.e. the values should range from 1 to dimCount). If not specified, the default is to map all of distgrid's dimensions against the dimensions of the grid in sequence.

[coordSys] The coordinate system of the grid coordinate data. For a full list of options, please see Section 55.11. If not specified then defaults to ESMF_COORDSYS_SPH_DEG.

[coordTypeKind] The type/kind of the grid coordinate data. All *numerical* types listed under section 55.61 are supported. If not specified then defaults to ESMF_TYPEKIND_R8.

[coordDimCount] List that has dimCount elements. Gives the dimension of each component (e.g. x) array. This is to allow factorization of the coordinate arrays. If not specified all arrays are the same size as the grid.

[coordDimMap] 2D list of size dimCount x dimCount. This array describes the map of each component array's dimensions onto the grids dimensions. Each entry `coordDimMap(i,j)` tells which grid dimension component i's, jth dimension maps to. Note that if j is bigger than `coordDimCount(i)` it is ignored. The default for each row i is `coordDimMap(i,:)=(1,2,3,4,...)`.

[gridEdgeLWidth] The padding around the lower edges of the grid. This padding is between the index space corresponding to the cells and the boundary of the the exclusive region. This extra space is to contain the extra padding for non-center stagger locations, and should be big enough to hold any stagger in the grid. If this and gridAlign are not present then defaults to 0, 0, ..., 0 (all zeros).

[gridEdgeUWidth] The padding around the upper edges of the grid. This padding is between the index space corresponding to the cells and the boundary of the the exclusive region. This extra space is to contain the extra padding for non-center stagger locations, and should be big enough to hold any stagger in the grid. If this and gridAlign are not present then defaults to 1, 1, ..., 1 (all ones).

[gridAlign] Specification of how the stagger locations should align with the cell index space (can be overridden by the individual staggerAligns). If the gridEdgeWidths are not specified than this argument implies the gridEdgeWidths. If the gridEdgeWidths are specified and this argument isn't then this argument is implied by the gridEdgeWidths. If this and the gridEdgeWidths are not specified, then defaults to -1, -1, ..., -1 (all negative ones).

[gridMemLBound] Specifies the lower index range of the memory of every DE in this Grid. Only used when indexflag is `ESMF_INDEX_USER`. May be overridden by staggerMemLBound.

[indexflag] Indicates the indexing scheme to be used in the new Grid. Please see Section 55.29 for the list of options. If not present, defaults to ESMF_INDEX_DELOCAL.

[name] `ESMF_Grid` name.

[vm] If present, the Grid object is created on the specified `ESMF_VM` object. The default is to create on the VM of the current context.

[rc] Return code; equals `ESMF_SUCCESS` if there are no errors.

32.6.12 ESMF_GridCreate - Create a Arbitrary Grid from a DistGrid

INTERFACE:

```
! Private name; call using ESMF_GridCreate()
    function ESMF_GridCreateFrmDistGridArb(distgrid, &
      indexArray, distDim, &
      coordSys, coordTypeKind, coordDimCount, coordDimMap, &
      name, rc)
```

RETURN VALUE:

```
    type(ESMF_Grid) :: ESMF_GridCreateFrmDistGridArb
```

ARGUMENTS:

```
type(ESMF_DistGrid),       intent(in)                :: distgrid
integer,                   intent(in)                :: indexArray(:,:)
integer,                   intent(in),   optional   :: distDim(:)
type(ESMF_CoordSys_Flag),  intent(in),   optional   :: coordSys
type(ESMF_TypeKind_Flag),  intent(in),   optional   :: coordTypeKind
integer,                   intent(in),   optional   :: coordDimCount(:)
integer,                   intent(in),   optional   :: coordDimMap(:,:)
character (len=*),         intent(in),   optional   :: name
integer,                   intent(out),  optional   :: rc
```

DESCRIPTION:

This is the lower level function to create an arbitrarily distributed `ESMF_Grid` object. It allows the user to fully specify the topology and index space (of the distributed dimensions) using the DistGrid methods and then build a grid out of the resulting `distgrid`. The `indexArray(2,dimCount)`, argument is required to specifies the topology of the grid.

The arguments are:

distgrid `ESMF_DistGrid` object that describes how the array is decomposed and distributed over DEs.

indexArray The minIndex and maxIndex array of size `2` x `dimCount` `indexArray(1,:)` is the minIndex and `indexArray(2,:)` is the maxIndex

[distDim] This array specifies which dimensions are arbitrarily distributed. The size of the array specifies the total distributed dimensions. if not specified, the default is that all dimensions will be arbitrarily distributed.

[coordSys] The coordinate system of the grid coordinate data. For a full list of options, please see Section 55.11. If not specified then defaults to ESMF_COORDSYS_SPH_DEG.

[coordTypeKind] The type/kind of the grid coordinate data. All *numerical* types listed under section 55.61 are supported. If not specified then defaults to ESMF_TYPEKIND_R8.

[coordDimCount] List that has dimCount elements. Gives the dimension of each component (e.g. x) array. This is to allow factorization of the coordinate arrays. If not specified each component is assumed to be size 1. Note, the default value is different from the same argument for a non-arbitrarily distributed grid.

[coordDimMap] 2D list of size dimCount x dimCount. This array describes the map of each coordinate array's dimensions onto the grids dimensions. `coordDimMap(i,j)` is the grid dimension of the jth dimension of the i'th coordinate array. If not specified, the default value of `coordDimMap(i,1)` is /ESMF_DIM_ARB/ if the ith dimension of the grid is arbitrarily distributed, or `i` if the ith dimension is not distributed. Note that if j is bigger than `coordDimCount(i)` then it's ignored. Please see Section 55.2 for a definition of ESMF_DIM_ARB.

[name] `ESMF_Grid` name.

[rc] Return code; equals `ESMF_SUCCESS` if there are no errors.

32.6.13 ESMF_GridCreate - Create a Grid from a SCRIP or GRIDSPEC format grid file with a user specified distribution

INTERFACE:

```
! Private name; call using ESMF_GridCreate()
   function ESMF_GridCreateFrmNCFileDG(filename, fileformat, distgrid, &
     isSphere, polekindflag, addCornerStagger, coordTypeKind, addUserArea, indexflag, &
     addMask, varname, coordNames, rc)
```

RETURN VALUE:

```
type(ESMF_Grid) :: ESMF_GridCreateFrmNCFileDG
```

ARGUMENTS:

```
     character(len=*),       intent(in)             :: filename
     type(ESMF_FileFormat_Flag), intent(in), optional :: fileformat
     type(ESMF_DistGrid),    intent(in)             :: distgrid
 -- The following arguments require argument keyword syntax (e.g. rc=rc). --
     logical,                intent(in),  optional  :: isSphere
     type(ESMF_PoleKind_Flag),  intent(in),  optional :: polekindflag(2)
     logical,                intent(in),  optional  :: addCornerStagger
     type(ESMF_TypeKind_Flag),intent(in), optional  :: coordTypeKind
     logical,                intent(in),  optional  :: addUserArea
     type(ESMF_Index_Flag),  intent(in),  optional  :: indexflag
     logical,                intent(in),  optional  :: addMask
     character(len=*),       intent(in),  optional  :: varname
     character(len=*),       intent(in),  optional  :: coordNames(:)
     integer,                intent(out), optional  :: rc
```

DESCRIPTION:

This function creates a `ESMF_Grid` object using the grid definition from a grid file in NetCDF that is either in the SCRIP format or in the CF convention. To specify the distribution, the user passes in a `distGrid`. The grid defined in the file has to be a 2D logically rectangular grid. This function first call `ESMF_GridCreateFrmNCFile()` to create a `ESMF_Grid` object using a pre-calculated block distribution, then redistribute the Grid to create a new Grid object using the user specified `distGrid`.

This call is *collective* across the current VM.

The arguments are:

filename The NetCDF Grid filename.

[fileformat] The file format. The valid options are `ESMF_FILEFORMAT_SCRIP` and `ESMF_FILEFORMAT_GRIDSPEC`. If it is the SCRIP format, the dimension `grid_rank` in the file has to be equal to 2. Please see section 55.20 for a detailed description of the options. If not specified, the file type will be detected automatically.

distGrid A distGrid defines how the grid is distributed

[isSphere] If .true., create a periodic Grid. If .false., create a regional Grid. Defaults to .true.

[polekindflag] Two item array which specifies the type of connection which occurs at the pole. The value in polekindflag(1) specifies the connection that occurs at the minimum end of the pole dimension. The value in polekindflag(2) specifies the connection that occurs at the maximum end of the pole dimension. Please see Section 32.2.5 for a full list of options. If not specified, the default is `ESMF_POLEKIND_MONOPOLE` for both.

[addCornerStagger] Uses the information in the grid file to add the Corner stagger to the Grid. The coordinates for the corner stagger is required for conservative regridding. If not specified, defaults to false.

[coordTypeKind] The type/kind of the grid coordinate data. Only ESMF_TYPEKIND_R4 and ESMF_TYPEKIND_R8 are allowed. Currently, ESMF_TYPEKIND_R4 is only supported for the GRIDSPEC fileformat. If not specified then defaults to ESMF_TYPEKIND_R8.

[addUserArea] If .true., read in the cell area from the Grid file, otherwise, ESMF will calculate it. The feature is only supported when the grid file is in the SCRIP format. If not set, the default value is .false.

[indexflag] Indicates the indexing scheme to be used in the new Grid. Please see section 55.29 for the list of options. If not present, defaults to `ESMF_INDEX_DELOCAL`.

[addMask] If .true., generate the mask using the missing_value attribute defined in 'varname'. This flag is only needed for the GRIDSPEC file format. If not set, the default value is .false.

[varname] If addMask is true, provide a variable name stored in the grid file and the mask will be generated using the missing value of the data value of this variable. The first two dimensions of the variable has to be the the longitude and the latitude dimension and the mask is derived from the first 2D values of this variable even if this data is 3D, or 4D array.

[coordNames] a two-element array containing the longitude and latitude variable names in a GRIDSPEC file if there are multiple coordinates defined in the file

[rc] Return code; equals `ESMF_SUCCESS` if there are no errors.

32.6.14 ESMF_GridCreate - Create a Grid from a SCRIP or GRIDSPEC format grid file

INTERFACE:

```
! Private name; call using ESMF_GridCreate()
   function ESMF_GridCreateFrmNCFile(filename, fileformat, regDecomp, &
     decompflag, delayout, isSphere, polekindflag, addCornerStagger, coordTypeKind, &
     addUserArea, indexflag, addMask, varname, coordNames, rc)
```

RETURN VALUE:

```
type(ESMF_Grid) :: ESMF_GridCreateFrmNCFile
```

ARGUMENTS:

```
 character(len=*),       intent(in)                :: filename
 type(ESMF_FileFormat_Flag), intent(in), optional  :: fileformat
-- The following arguments require argument keyword syntax (e.g. rc=rc). --
 integer,                intent(in),  optional     :: regDecomp(:)
 type(ESMF_Decomp_Flag), intent(in),  optional     :: decompflag(:)
 type(ESMF_DELayout),    intent(in),  optional     :: delayout
 logical,                intent(in),  optional     :: isSphere
 type(ESMF_PoleKind_Flag),  intent(in),  optional  :: polekindflag(2)
 logical,                intent(in),  optional     :: addCornerStagger
 type(ESMF_TypeKind_Flag),intent(in), optional     :: coordTypeKind
```

```
logical,                intent(in),  optional     :: addUserArea
type(ESMF_Index_Flag),  intent(in),  optional     :: indexflag
logical,                intent(in),  optional     :: addMask
character(len=*),       intent(in),  optional     :: varname
character(len=*),       intent(in),  optional     :: coordNames(:)
integer,                intent(out), optional     :: rc
```

DESCRIPTION:

This function creates a `ESMF_Grid` object using the grid definition from a grid file in NetCDF that is either in the SCRIP format or in the CF convention. To specify the distribution, the user passes in an array (`regDecomp`) specifying the number of DEs to divide each dimension into. The array `decompflag` indicates how the division into DEs is to occur. The default is to divide the range as evenly as possible. The grid defined in the file has to be a 2D logically rectangular grid.

This call is *collective* across the current VM.

The arguments are:

filename The NetCDF Grid filename.

[fileformat] The file format. The valid options are `ESMF_FILEFORMAT_SCRIP` and `ESMF_FILEFORMAT_GRIDSPEC`. If it is the SCRIP format, the dimension `grid_rank` in the file has to be equal to 2. Please see section 55.20 for a detailed description of the options. If not specified, the filetype will be automatically detected.

[regDecomp] A 2 element array specifying how the grid is decomposed. Each entry is the number of decounts for that dimension. The total decounts cannot exceed the total number of PETs. In other word, at most one DE is allowed per processor. If not specified, the default decomposition will be petCountx1.

[decompflag] List of decomposition flags indicating how each dimension of the tile is to be divided between the DEs. The default setting is `ESMF_DECOMP_BALANCED` in all dimensions. Please see section 55.14 for a full description of the possible options. Note that currently the option `ESMF_DECOMP_CYCLIC` isn't supported in Grid creation.

[delayout] The DELayout that determines DE layout of DEs across PETs. The default is to create a default DELayout with the correct number of DEs according to the `regDecomp`. See the documentation of the `ESMF_DELayoutCreate()` method for details about the default DELayout.

[isSphere] If .true., create a periodic Grid. If .false., create a regional Grid. Defaults to .true.

[polekindflag] Two item array which specifies the type of connection which occurs at the pole. The value in polekindflag(1) specifies the connection that occurs at the minimum end of the pole dimension. The value in polekindflag(2) specifies the connection that occurs at the maximum end of the pole dimension. Please see Section 32.2.5 for a full list of options. If not specified, the default is `ESMF_POLEKIND_MONOPOLE` for both.

[addCornerStagger] Uses the information in the grid file to add the Corner stagger to the Grid. The coordinates for the corner stagger is required for conservative regridding. If not specified, defaults to false.

[coordTypeKind] The type/kind of the grid coordinate data. Only ESMF_TYPEKIND_R4 and ESMF_TYPEKIND_R8 are allowed. Currently, ESMF_TYPEKIND_R4 is only supported for the GRIDSPEC fileformat. If not specified then defaults to ESMF_TYPEKIND_R8.

[addUserArea] If .true., read in the cell area from the Grid file, otherwise, ESMF will calculate it. The feature is only supported when the grid file is in the SCRIP format. If not set, the default value is .false.

[indexflag] Indicates the indexing scheme to be used in the new Grid. Please see section 55.29 for the list of options. If not present, defaults to `ESMF_INDEX_DELOCAL`.

[addMask] If .true., generate the mask using the missing_value attribute defined in 'varname'. This flag is only needed for the GRIDSPEC file format. If not set, the default value is .false.

[varname] If addMask is true, provide a variable name stored in the grid file and the mask will be generated using the missing value of the data value of this variable. The first two dimensions of the variable has to be the the longitude and the latitude dimension and the mask is derived from the first 2D values of this variable even if this data is 3D, or 4D array.

[coordNames] a two-element array containing the longitude and latitude variable names in a GRIDSPEC file if there are multiple coordinates defined in the file

[rc] Return code; equals `ESMF_SUCCESS` if there are no errors.

32.6.15 ESMF_GridCreate1PeriDim - Create a Grid with one periodic dim and an irregular distribution

INTERFACE:

```
! Private name; call using ESMF_GridCreate1PeriDim()
    function ESMF_GridCreate1PeriDimI(minIndex,         &
      countsPerDEDim1,countsPerDeDim2,                  &
      countsPerDEDim3,                                  &
      polekindflag, periodicDim, poleDim,                   &
      coordSys, coordTypeKind,                          &
      coordDep1, coordDep2, coordDep3,                  &
      gridEdgeLWidth, gridEdgeUWidth, gridAlign,        &
      gridMemLBound, indexflag, petMap, name, rc)
```

RETURN VALUE:

```
    type(ESMF_Grid) :: ESMF_GridCreate1PeriDimI
```

ARGUMENTS:

```
     integer,                   intent(in),  optional :: minIndex(:)
     integer,                   intent(in)            :: countsPerDEDim1(:)
     integer,                   intent(in)            :: countsPerDEDim2(:)
-- The following arguments require argument keyword syntax (e.g. rc=rc). --
     integer,                   intent(in),  optional :: countsPerDEDim3(:)
     type(ESMF_PoleKind_Flag),  intent(in),  optional :: polekindflag(2)
     integer,                   intent(in),  optional :: periodicDim
     integer,                   intent(in),  optional :: poleDim
     type(ESMF_CoordSys_Flag),  intent(in),  optional :: coordSys
     type(ESMF_TypeKind_Flag),  intent(in),  optional :: coordTypeKind
     integer,                   intent(in),  optional :: coordDep1(:)
     integer,                   intent(in),  optional :: coordDep2(:)
     integer,                   intent(in),  optional :: coordDep3(:)
     integer,                   intent(in),  optional :: gridEdgeLWidth(:)
     integer,                   intent(in),  optional :: gridEdgeUWidth(:)
     integer,                   intent(in),  optional :: gridAlign(:)
     integer,                   intent(in),  optional :: gridMemLBound(:)
```

```
type(ESMF_Index_Flag),      intent(in),  optional :: indexflag
integer,                    intent(in),  optional :: petMap(:,:,:)
character (len=*),          intent(in),  optional :: name
integer,                    intent(out), optional :: rc
```

DESCRIPTION:

This method creates a single tile, irregularly distributed grid (see Figure 13) with one periodic dimension. To specify the irregular distribution, the user passes in an array for each grid dimension, where the length of the array is the number of DEs in the dimension. Currently this call only supports creating 2D or 3D Grids. A 2D Grid can be specified using the countsPerDEDim1 and countsPerDEDim2 arguments. A 3D Grid can be specified by also using the optional countsPerDEDim3 argument. The index of each array element in these arguments corresponds to a DE number. The array value at the index is the number of grid cells on the DE in that dimension.

Section 32.3.4 shows an example of using this method to create a 2D Grid with uniformly spaced coordinates. This creation method can also be used as the basis for grids with rectilinear coordinates or curvilinear coordinates.

The arguments are:

[minIndex] Tuple to start the index ranges at. If not present, defaults to /1,1,1,.../.

countsPerDEDim1 This arrays specifies the number of cells per DE for index dimension 1 for the exclusive region (the center stagger location).

countsPerDEDim2 This array specifies the number of cells per DE for index dimension 2 for the exclusive region (center stagger location).

[countsPerDEDim3] This array specifies the number of cells per DE for index dimension 3 for the exclusive region (center stagger location). If not specified then grid is 2D.

[polekindflag] Two item array which specifies the type of connection which occurs at the pole. The value in polekindflag(1) specifies the connection that occurs at the minimum end of the pole dimension. The value in polekindflag(2) specifies the connection that occurs at the maximum end of the pole dimension. Please see Section 32.2.5 for a full list of options. If not specified, the default is `ESMF_POLEKIND_MONOPOLE` for both.

[periodicDim] The periodic dimension. If not specified, defaults to 1.

[poleDim] The dimension at who's ends the poles are located. If not specified defaults to 2.

[coordSys] The coordinate system of the grid coordinate data. For a full list of options, please see Section 55.11. If not specified then defaults to ESMF_COORDSYS_SPH_DEG.

[coordTypeKind] The type/kind of the grid coordinate data. All *numerical* types listed under section 55.61 are supported. If not specified then defaults to ESMF_TYPEKIND_R8.

[coordDep1] This array specifies the dependence of the first coordinate component on the three index dimensions described by `coordsPerDEDim1,2,3`. The size of the array specifies the number of dimensions of the first coordinate component array. The values specify which of the index dimensions the corresponding coordinate arrays map to. If not present the default is 1,2,...,grid rank.

[coordDep2] This array specifies the dependence of the second coordinate component on the three index dimensions described by `coordsPerDEDim1,2,3`. The size of the array specifies the number of dimensions of the second coordinate component array. The values specify which of the index dimensions the corresponding coordinate arrays map to. If not present the default is 1,2,...,grid rank.

[coordDep3] This array specifies the dependence of the third coordinate component on the three index dimensions described by `coordsPerDEDim1,2,3`. The size of the array specifies the number of dimensions of the third coordinate component array. The values specify which of the index dimensions the corresponding coordinate arrays map to. If not present the default is 1,2,...,grid rank.

[gridEdgeLWidth] The padding around the lower edges of the grid. This padding is between the index space corresponding to the cells and the boundary of the the exclusive region. This extra space is to contain the extra padding for non-center stagger locations, and should be big enough to hold any stagger in the grid. If this and gridAlign are not present then defaults to 0, 0, ..., 0 (all zeros).

[gridEdgeUWidth] The padding around the upper edges of the grid. This padding is between the index space corresponding to the cells and the boundary of the the exclusive region. This extra space is to contain the extra padding for non-center stagger locations, and should be big enough to hold any stagger in the grid. If this and gridAlign are not present then defaults to 1, 1, ..., 1 (all ones).

[gridAlign] Specification of how the stagger locations should align with the cell index space (can be overridden by the individual staggerAligns). If the gridEdgeWidths are not specified than this argument implies the gridEdgeWidths. If the gridEdgeWidths are specified and this argument isn't then this argument is implied by the gridEdgeWidths. If this and the gridEdgeWidths are not specified, then defaults to -1, -1, ..., -1 (all negative ones).

[gridMemLBound] Specifies the lower index range of the memory of every DE in this Grid. Only used when indexflag is `ESMF_INDEX_USER`. May be overridden by staggerMemLBound.

[indexflag] Indicates the indexing scheme to be used in the new Grid. Please see Section 55.29 for the list of options. If not present, defaults to ESMF_INDEX_DELOCAL.

[petMap] Sets the mapping of pets to the created DEs. This 3D should be of size size(countsPerDEDim1) x size(countsPerDEDim2) x size(countsPerDEDim3). If countsPerDEDim3 isn't present, then the last dimension is of size 1.

[name] `ESMF_Grid` name.

[rc] Return code; equals `ESMF_SUCCESS` if there are no errors.

32.6.16 ESMF_GridCreate1PeriDim - Create a Grid with one periodic dim and a regular distribution

INTERFACE:

```
! Private name; call using ESMF_GridCreate1PeriDim()
    function ESMF_GridCreate1PeriDimR(regDecomp, decompFlag, &
      minIndex, maxIndex,                                    &
      polekindflag, periodicDim, poleDim,                        &
      coordSys, coordTypeKind,                               &
      coordDep1, coordDep2, coordDep3,                       &
      gridEdgeLWidth, gridEdgeUWidth, gridAlign,             &
      gridMemLBound, indexflag, petMap, name, rc)
```

RETURN VALUE:

```
    type(ESMF_Grid) :: ESMF_GridCreate1PeriDimR
```

ARGUMENTS:

```
        integer,                    intent(in),  optional :: regDecomp(:)
        type(ESMF_Decomp_Flag),     intent(in),  optional :: decompflag(:)
        integer,                    intent(in),  optional :: minIndex(:)
        integer,                    intent(in)            :: maxIndex(:)
 -- The following arguments require argument keyword syntax (e.g. rc=rc). --
        type(ESMF_PoleKind_Flag),   intent(in),  optional :: polekindflag(2)
        integer,                    intent(in),  optional :: periodicDim
        integer,                    intent(in),  optional :: poleDim
        type(ESMF_CoordSys_Flag),   intent(in),  optional :: coordSys
        type(ESMF_TypeKind_Flag),   intent(in),  optional :: coordTypeKind
        integer,                    intent(in),  optional :: coordDep1(:)
        integer,                    intent(in),  optional :: coordDep2(:)
        integer,                    intent(in),  optional :: coordDep3(:)
        integer,                    intent(in),  optional :: gridEdgeLWidth(:)
        integer,                    intent(in),  optional :: gridEdgeUWidth(:)
        integer,                    intent(in),  optional :: gridAlign(:)
        integer,                    intent(in),  optional :: gridMemLBound(:)
        type(ESMF_Index_Flag),      intent(in),  optional :: indexflag
        integer,                    intent(in),  optional :: petMap(:,:,:)
        character (len=*),          intent(in),  optional :: name
        integer,                    intent(out), optional :: rc
```

DESCRIPTION:

This method creates a single tile, regularly distributed grid (see Figure 13) with one periodic dimension. To specify the distribution, the user passes in an array (`regDecomp`) specifying the number of DEs to divide each dimension into. The array `decompFlag` indicates how the division into DEs is to occur. The default is to divide the range as evenly as possible. Currently this call only supports creating a 2D or 3D Grid, and thus, for example, `maxIndex` must be of size 2 or 3.

The arguments are:

[regDecomp] List that has the same number of elements as `maxIndex`. Each entry is the number of decounts for that dimension. If not specified, the default decomposition will be petCountx1x1..x1.

[decompflag] List of decomposition flags indicating how each dimension of the tile is to be divided between the DEs. The default setting is `ESMF_DECOMP_BALANCED` in all dimensions. Please see Section 55.14 for a full description of the ! possible options. Note that currently the option `ESMF_DECOMP_CYCLIC` isn't supported in Grid creation.

[minIndex] The bottom extent of the grid array. If not given then the value defaults to /1,1,1,.../.

maxIndex The upper extent of the grid array.

[polekindflag] Two item array which specifies the type of connection which occurs at the pole. The value in polekindflag(1) specifies the connection that occurs at the minimum end of the pole dimension. The value in polekindflag(2) specifies the connection that occurs at the maximum end of the pole dimension. Please see Section 32.2.5 for a full list of options. If not specified, the default is `ESMF_POLEKIND_MONOPOLE` for both.

[periodicDim] The periodic dimension. If not specified, defaults to 1.

[poleDim] The dimension at who's ends the poles are located. If not specified defaults to 2.

[coordSys] The coordinate system of the grid coordinate data. For a full list of options, please see Section 55.11. If not specified then defaults to ESMF_COORDSYS_SPH_DEG.

[coordTypeKind] The type/kind of the grid coordinate data. All *numerical* types listed under section 55.61 are supported. If not specified then defaults to ESMF_TYPEKIND_R8.

[coordDep1] This array specifies the dependence of the first coordinate component on the three index dimensions described by `coordsPerDEDim1,2,3`. The size of the array specifies the number of dimensions of the first coordinate component array. The values specify which of the index dimensions the corresponding coordinate arrays map to. If not present the default is 1,2,...,grid rank.

[coordDep2] This array specifies the dependence of the second coordinate component on the three index dimensions described by `coordsPerDEDim1,2,3`. The size of the array specifies the number of dimensions of the second coordinate component array. The values specify which of the index dimensions the corresponding coordinate arrays map to. If not present the default is 1,2,...,grid rank.

[coordDep3] This array specifies the dependence of the third coordinate component on the three index dimensions described by `coordsPerDEDim1,2,3`. The size of the array specifies the number of dimensions of the third coordinate component array. The values specify which of the index dimensions the corresponding coordinate arrays map to. If not present the default is 1,2,...,grid rank.

[gridEdgeLWidth] The padding around the lower edges of the grid. This padding is between the index space corresponding to the cells and the boundary of the the exclusive region. This extra space is to contain the extra padding for non-center stagger locations, and should be big enough to hold any stagger in the grid. If this and gridAlign are not present then defaults to 0, 0, ..., 0 (all zeros).

[gridEdgeUWidth] The padding around the upper edges of the grid. This padding is between the index space corresponding to the cells and the boundary of the the exclusive region. This extra space is to contain the extra padding for non-center stagger locations, and should be big enough to hold any stagger in the grid. If this and gridAlign are not present then defaults to 1, 1, ..., 1 (all ones).

[gridAlign] Specification of how the stagger locations should align with the cell index space (can be overridden by the individual staggerAligns). If the gridEdgeWidths are not specified than this argument implies the gridEdgeWidths. If the gridEdgeWidths are specified and this argument isn't then this argument is implied by the gridEdgeWidths. If this and the gridEdgeWidths are not specified, then defaults to -1, -1, ..., -1 (all negative ones).

[gridMemLBound] Specifies the lower index range of the memory of every DE in this Grid. Only used when indexflag is `ESMF_INDEX_USER`. May be overridden by staggerMemLBound.

[indexflag] Indicates the indexing scheme to be used in the new Grid. Please see Section 55.29 for the list of options. If not present, defaults to ESMF_INDEX_DELOCAL.

[petMap] Sets the mapping of pets to the created DEs. This 3D should be of size regDecomp(1) x regDecomp(2) x regDecomp(3) If the Grid is 2D, then the last dimension is of size 1.

[name] `ESMF_Grid` name.

[rc] Return code; equals `ESMF_SUCCESS` if there are no errors.

32.6.17 ESMF_GridCreate1PeriDim - Create a Grid with one periodic dim and an arbitrary distribution

INTERFACE:

```
! Private name; call using ESMF_GridCreate1PeriDim()
    function ESMF_GridCreate1PeriDimA(minIndex, maxIndex,  &
      arbIndexCount, arbIndexList,                         &
      polekindflag, periodicDim, poleDim,                      &
      coordSys, coordTypeKind,                             &
      coordDep1, coordDep2, coordDep3,                     &
      distDim, name, rc)
```

RETURN VALUE:

```
type(ESMF_Grid) :: ESMF_GridCreate1PeriDimA
```

ARGUMENTS:

```
        integer,                    intent(in),  optional :: minIndex(:)
         integer,                    intent(in)            :: maxIndex(:)
        integer,                    intent(in)                    :: arbIndexCount
        integer,                    intent(in)            :: arbIndexList(:,:)
 -- The following arguments require argument keyword syntax (e.g. rc=rc). --
        type(ESMF_PoleKind_Flag),   intent(in),  optional :: polekindflag(2)
        integer,                    intent(in),  optional :: periodicDim
        integer,                    intent(in),  optional :: poleDim
        type(ESMF_CoordSys_Flag),   intent(in),  optional :: coordSys
        type(ESMF_TypeKind_Flag),   intent(in),  optional :: coordTypeKind
        integer,                    intent(in),  optional :: coordDep1(:)
        integer,                    intent(in),  optional :: coordDep2(:)
        integer,                    intent(in),  optional :: coordDep3(:)
        integer,                    intent(in),  optional :: distDim(:)
        character (len=*),          intent(in),  optional :: name
        integer,                    intent(out), optional :: rc
```

DESCRIPTION:

This method creates a single tile, arbitrarily distributed grid (see Figure 13) with one periodic dimension. To specify the arbitrary distribution, the user passes in an 2D array of local indices, where the first dimension is the number of local grid cells specified by `localArbIndexCount` and the second dimension is the number of distributed dimensions.

`distDim` specifies which grid dimensions are arbitrarily distributed. The size of `distDim` has to agree with the size of the second dimension of `localArbIndex`.

Currently this call only supports creating a 2D or 3D Grid, and thus, for example, `maxIndex` must be of size 2 or 3.

The arguments are:

[minIndex] Tuple to start the index ranges at. If not present, defaults to /1,1,1,.../.

maxIndex The upper extend of the grid index ranges.

arbIndexCount The number of grid cells in the local DE. It is okay to have 0 grid cell in a local DE.

arbIndexList This 2D array specifies the indices of the PET LOCAL grid cells. The dimensions should be arbIndexCount * number of Distributed grid dimensions where arbIndexCount is the input argument specified below

[polekindflag] Two item array which specifies the type of connection which occurs at the pole. The value in polekindflag(1) specifies the connection that occurs at the minimum end of the pole dimension. The value in polekindflag(2) specifies the connection that occurs at the maximum end of the pole dimension. Please see Section 32.2.5 for a full list of options. If not specified, the default is `ESMF_POLEKIND_MONOPOLE` for both.

[periodicDim] The periodic dimension. If not specified, defaults to 1.

[poleDim] The dimension at who's ends the poles are located. If not specified defaults to 2.

[coordSys] The coordinate system of the grid coordinate data. For a full list of options, please see Section 55.11. If not specified then defaults to ESMF_COORDSYS_SPH_DEG.

[coordTypeKind] The type/kind of the grid coordinate data. All *numerical* types listed under section 55.61 are supported. If not specified then defaults to ESMF_TYPEKIND_R8.

[coordDep1] The size of the array specifies the number of dimensions of the first coordinate component array. The values specify which of the index dimensions the corresponding coordinate arrays map to. The format should be /ESMF_DIM_ARB/ where /ESMF_DIM_ARB/ is mapped to the collapsed 1D dimension from all the arbitrarily distributed dimensions. n is the dimension that is not distributed (if exists). If not present the default is /ESMF_DIM_ARB/ if the first dimension is arbitararily distributed, or /n/ if not distributed (i.e. n=1) Please see Section 55.2 for a definition of ESMF_DIM_ARB.

[coordDep2] The size of the array specifies the number of dimensions of the second coordinate component array. The values specify which of the index dimensions the corresponding coordinate arrays map to. The format should be /ESMF_DIM_ARB/ where /ESMF_DIM_ARB/ is mapped to the collapsed 1D dimension from all the arbitrarily distributed dimensions. n is the dimension that is not distributed (if exists). If not present the default is /ESMF_DIM_ARB/ if this dimension is arbitararily distributed, or /n/ if not distributed (i.e. n=2) Please see Section 55.2 for a definition of ESMF_DIM_ARB.

[coordDep3] The size of the array specifies the number of dimensions of the third coordinate component array. The values specify which of the index dimensions the corresponding coordinate ! arrays map to. The format should be /ESMF_DIM_ARB/ where /ESMF_DIM_ARB/ is mapped to the collapsed 1D dimension from all the arbitrarily distributed dimensions. n is the dimension that is not distributed (if exists). If not present the default is /ESMF_DIM_ARB/ if this dimension is arbitararily distributed, or /n/ if not distributed (i.e. n=3) Please see Section 55.2 for a definition of ESMF_DIM_ARB.

[distDim] This array specifies which dimensions are arbitrarily distributed. The size of the array specifies the total distributed dimensions. if not specified, defaults is all dimensions will be arbitrarily distributed. The size has to agree with the size of the second dimension of `localArbIndex`.

[name] `ESMF_Grid` name.

[rc] Return code; equals `ESMF_SUCCESS` if there are no errors.

32.6.18 ESMF_GridCreate2PeriDim - Create a Grid with two periodic dims and an irregular distribution

INTERFACE:

```
! Private name; call using ESMF_GridCreate2PeriDim()
    function ESMF_GridCreate2PeriDimI(minIndex,          &
      countsPerDEDim1,countsPerDeDim2,                   &
      countsPerDEDim3,                                   &
      coordSys, coordTypeKind,                           &
      coordDep1, coordDep2, coordDep3,                   &
      gridEdgeLWidth, gridEdgeUWidth, gridAlign,         &
      gridMemLBound, indexflag, petMap, name, rc)
```

RETURN VALUE:

```
    type(ESMF_Grid) :: ESMF_GridCreate2PeriDimI
```

ARGUMENTS:

```
        integer,                    intent(in),  optional :: minIndex(:)
        integer,                    intent(in)            :: countsPerDEDim1(:)
        integer,                    intent(in)            :: countsPerDEDim2(:)
 -- The following arguments require argument keyword syntax (e.g. rc=rc). --
        integer,                    intent(in),  optional :: countsPerDEDim3(:)
        type(ESMF_CoordSys_Flag),   intent(in),  optional :: coordSys
        type(ESMF_TypeKind_Flag),   intent(in),  optional :: coordTypeKind
        integer,                    intent(in),  optional :: coordDep1(:)
        integer,                    intent(in),  optional :: coordDep2(:)
        integer,                    intent(in),  optional :: coordDep3(:)
        integer,                    intent(in),  optional :: gridEdgeLWidth(:)
        integer,                    intent(in),  optional :: gridEdgeUWidth(:)
        integer,                    intent(in),  optional :: gridAlign(:)
        integer,                    intent(in),  optional :: gridMemLBound(:)
        type(ESMF_Index_Flag),      intent(in),  optional :: indexflag
        integer,                    intent(in),  optional :: petMap(:,:,:)
        character (len=*),          intent(in),  optional :: name
        integer,                    intent(out), optional :: rc
```

DESCRIPTION:

This method creates a single tile, irregularly distributed grid (see Figure 13) with two periodic dimensions. To specify the irregular distribution, the user passes in an array for each grid dimension, where the length of the array is the number of DEs in the dimension. Currently this call only supports creating 2D or 3D Grids. A 2D Grid can be specified using the countsPerDEDim1 and countsPerDEDim2 arguments. A 3D Grid can be specified by also using the optional countsPerDEDim3 argument. The index of each array element in these arguments corresponds to a DE number. The array value at the index is the number of grid ! cells on the DE in that dimension.

Section 32.3.4 shows an example of using this method to create a 2D Grid with uniformly spaced coordinates. This creation method can also be used as the basis for grids with rectilinear coordinates or curvilinear coordinates.

The arguments are:

[minIndex] Tuple to start the index ranges at. If not present, defaults to /1,1,1,.../.

countsPerDEDim1 This arrays specifies the number of cells per DE for index dimension 1 for the exclusive region (the center stagger location).

countsPerDEDim2 This array specifies the number of cells per DE for index dimension 2 for the exclusive region (center stagger location).

[countsPerDEDim3] This array specifies the number of cells per DE for index dimension 3 for the exclusive region (center stagger location). If not specified then grid is 2D.

[coordSys] The coordinate system of the grid coordinate data. For a full list of options, please see Section 55.11. If not specified then defaults to ESMF_COORDSYS_SPH_DEG.

[coordTypeKind] The type/kind of the grid coordinate data. All *numerical* types listed under section 55.61 are supported. If not specified then defaults to ESMF_TYPEKIND_R8.

[coordDep1] This array specifies the dependence of the first coordinate component on the three index dimensions described by `coordsPerDEDim1,2,3`. The size of the array specifies the number of dimensions of the first coordinate component array. The values specify which of the index dimensions the corresponding coordinate arrays map to. If not present the default is 1,2,...,grid rank.

[coordDep2] This array specifies the dependence of the second coordinate component on the three index dimensions described by `coordsPerDEDim1,2,3`. The size of the array specifies the number of dimensions of

the second coordinate component array. The values specify which of the index dimensions the corresponding coordinate arrays map to. If not present the default is 1,2,...,grid rank. !

[coordDep3] This array specifies the dependence of the third coordinate component on the three index dimensions described by `coordsPerDEDim1,2,3`. The size of the array specifies the number of dimensions of the third coordinate component array. The values specify which of the index dimensions the corresponding coordinate arrays map to. If not present the default is 1,2,...,grid rank.

[gridEdgeLWidth] The padding around the lower edges of the grid. This padding is between the index space corresponding to the cells and the boundary of the the exclusive region. This extra space is to contain the extra padding for non-center stagger locations, and should be big enough to hold any stagger in the grid. If this and gridAlign are not present then defaults to 0, 0, ..., 0 (all zeros).

[gridEdgeUWidth] The padding around the upper edges of the grid. This padding is between the index space corresponding to the cells and the boundary of the the exclusive region. This extra space is to contain the extra padding for non-center stagger locations, and should be big enough to hold any stagger in the grid. If this and gridAlign are not present then defaults to 1, 1, ..., 1 (all ones).

[gridAlign] Specification of how the stagger locations should align with the cell index space (can be overridden by the individual staggerAligns). If the gridEdgeWidths are not specified than this argument implies the gridEdgeWidths. If the gridEdgeWidths are specified and this argument isn't then this argument is implied by the gridEdgeWidths. If this and the gridEdgeWidths are not specified, then defaults to -1, -1, ..., -1 (all negative ones).

[gridMemLBound] Specifies the lower index range of the memory of every DE in this Grid. Only used when indexflag is `ESMF_INDEX_USER`. May be overridden by staggerMemLBound.

[indexflag] Indicates the indexing scheme to be used in the new Grid. Please see Section 55.29 for the list of options. If not present, defaults to ESMF_INDEX_DELOCAL.

[petMap] Sets the mapping of pets to the created DEs. This 3D should be of size size(countsPerDEDim1) x size(countsPerDEDim2) x size(countsPerDEDim3). If countsPerDEDim3 isn't present, then the last dimension is of size 1.

[name] `ESMF_Grid` name.

[rc] ! Return code; equals `ESMF_SUCCESS` if there are no errors.

32.6.19 ESMF_GridCreate2PeriDim - Create a Grid with two periodic dims and a regular distribution

INTERFACE:

```
! Private name; call using ESMF_GridCreate2PeriDim()
    function ESMF_GridCreate2PeriDimR(regDecomp, decompFlag, &
      minIndex, maxIndex,                                    &
      coordSys, coordTypeKind,                               &
      coordDep1, coordDep2, coordDep3,                       &
      gridEdgeLWidth, gridEdgeUWidth, gridAlign,             &
      gridMemLBound, indexflag, petMap, name, rc)
```

RETURN VALUE:

```
type(ESMF_Grid) :: ESMF_GridCreate2PeriDimR
```

ARGUMENTS:

```
        integer,                    intent(in),  optional :: regDecomp(:)
        type(ESMF_Decomp_Flag),     intent(in),  optional :: decompflag(:)
        integer,                    intent(in),  optional :: minIndex(:)
        integer,                    intent(in)            :: maxIndex(:)
 -- The following arguments require argument keyword syntax (e.g. rc=rc). --
        type(ESMF_CoordSys_Flag),   intent(in),  optional :: coordSys
        type(ESMF_TypeKind_Flag),   intent(in),  optional :: coordTypeKind
        integer,                    intent(in),  optional :: coordDep1(:)
        integer,                    intent(in),  optional :: coordDep2(:)
        integer,                    intent(in),  optional :: coordDep3(:)
        integer,                    intent(in),  optional :: gridEdgeLWidth(:)
        integer,                    intent(in),  optional :: gridEdgeUWidth(:)
        integer,                    intent(in),  optional :: gridAlign(:)
        integer,                    intent(in),  optional :: gridMemLBound(:)
        type(ESMF_Index_Flag),      intent(in),  optional :: indexflag
        integer,                    intent(in),  optional :: petMap(:,:,:)
        character (len=*),          intent(in),  optional :: name
        integer,                    intent(out), optional :: rc
```

DESCRIPTION:

This method creates a single tile, regularly distributed grid (see Figure 13) with two periodic dimensions. To specify the distribution, the user passes in an array (`regDecomp`) specifying the number of DEs to divide each dimension into. The array `decompFlag` indicates how the division into DEs is to occur. The default is to divide the range as evenly as possible. Currently this call only supports creating a 2D or 3D Grid, and thus, for example, `maxIndex` must be of size 2 or 3.

The arguments are:

[regDecomp] List that has the same number of elements as `maxIndex`. Each entry is the number of decounts for that dimension. If not specified, the default decomposition will be petCountx1x1..x1.

[decompflag] List of decomposition flags indicating how each dimension of the tile is to be divided between the DEs. The default setting is `ESMF_DECOMP_BALANCED` in all dimensions. Please see Section 55.14 for a full description of the possible options. Note that currently the option `ESMF_DECOMP_CYCLIC` isn't supported in Grid creation.

[minIndex] The bottom extent of the grid array. If not given then the value defaults to /1,1,1,.../.

maxIndex The upper extent of the grid array.

[coordSys] The coordinate system of the grid coordinate data. For a full list of options, please see Section 55.11. If not specified then defaults to ESMF_COORDSYS_SPH_DEG.

[coordTypeKind] The type/kind of the grid coordinate data. All *numerical* types listed under section 55.61 are supported. If not specified then defaults to ESMF_TYPEKIND_R8.

[coordDep1] This array specifies the dependence of the first coordinate component on the three index dimensions described by `coordsPerDEDim1,2,3`. The size of the array specifies the number of dimensions of the first coordinate component array. The values specify which of the index dimensions the corresponding coordinate arrays map to. If not present the default is 1,2,...,grid rank.

[coordDep2] This array specifies the dependence of the second coordinate component on the three index dimensions described by `coordsPerDEDim1,2,3`. The size of the array specifies the number of dimensions of the second coordinate component array. The values specify which of the index dimensions the corresponding coordinate arrays map to. If not present the default is 1,2,...,grid rank.

[coordDep3] This array specifies the dependence of the third coordinate component on the three index dimensions described by `coordsPerDEDim1,2,3`. The size of the array specifies the number of dimensions of the third coordinate component array. The values specify which of the index dimensions the corresponding coordinate arrays map to. If not present the default is 1,2,...,grid rank.

[gridEdgeLWidth] The padding around the lower edges of the grid. This padding is between the index space corresponding to the cells and the boundary of the the exclusive region. This extra space is to contain the extra padding for non-center stagger locations, and should be big enough to hold any stagger in the grid. If this and gridAlign are not present then defaults to 0, 0, ..., 0 (all zeros).

[gridEdgeUWidth] The padding around the upper edges of the grid. This padding is between the index space corresponding to the cells and the boundary of the the exclusive region. This extra space is to contain the extra padding for non-center stagger locations, and should be big enough to hold any stagger in the grid. If this and gridAlign are not present then defaults to 1, 1, ..., 1 (all ones).

[gridAlign] Specification of how the stagger locations should align with the cell index space (can be overridden by the individual staggerAligns). If the gridEdgeWidths are not specified than this argument implies the gridEdgeWidths. If the gridEdgeWidths are specified and this argument isn't then this argument is implied by the gridEdgeWidths. If this and the gridEdgeWidths are not specified, then defaults to -1, -1, ..., -1 (all negative ones).

[gridMemLBound] Specifies the lower index range of the memory of every DE in this Grid. Only used when indexflag is `ESMF_INDEX_USER`. May be overridden by staggerMemLBound.

[indexflag] Indicates the indexing scheme to be used in the new Grid. Please see Section 55.29 for the list of options. If not present, defaults to ESMF_INDEX_DELOCAL.

[petMap] Sets the mapping of pets to the created DEs. This 3D should be of size regDecomp(1) x regDecomp(2) x regDecomp(3) If the Grid is 2D, then the last dimension is of size 1.

[name] `ESMF_Grid` name.

[rc] Return code; equals `ESMF_SUCCESS` if there are no errors.

32.6.20 ESMF_GridCreate2PeriDim - Create a Grid with two periodic dims and an arbitrary distribution

INTERFACE:

```
! Private name; call using ESMF_GridCreate2PeriDim()
    function ESMF_GridCreate2PeriDimA(minIndex, maxIndex, &
      arbIndexCount, arbIndexList,                        &
      coordSys, coordTypeKind,                            &
      coordDep1, coordDep2, coordDep3,                    &
      distDim, name, rc)
```

RETURN VALUE:

```
    type(ESMF_Grid) :: ESMF_GridCreate2PeriDimA
```

ARGUMENTS:

```
        integer,                    intent(in),  optional :: minIndex(:)
        integer,                    intent(in)            :: maxIndex(:)
        integer,                    intent(in)                    :: arbIndexCount
         integer,                    intent(in)            :: arbIndexList(:,:)
 -- The following arguments require argument keyword syntax (e.g. rc=rc). --
        type(ESMF_CoordSys_Flag),   intent(in),  optional :: coordSys
        type(ESMF_TypeKind_Flag),   intent(in),  optional :: coordTypeKind
        integer,                    intent(in),  optional :: coordDep1(:)
        integer,                    intent(in),  optional :: coordDep2(:)
        integer,                    intent(in),  optional :: coordDep3(:)
        integer,                    intent(in),  optional :: distDim(:)
        character (len=*),          intent(in),  optional :: name
        integer,                    intent(out), optional :: rc
```

DESCRIPTION:

This method creates a single tile, arbitrarily distributed grid (see Figure 13) with two periodic dimensions. To specify the arbitrary distribution, the user passes in an 2D array of local indices, where the first dimension is the number of local grid cells specified by `localArbIndexCount` and the second dimension is the number of distributed dimensions.

`distDim` specifies which grid dimensions are arbitrarily distributed. The size of `distDim` has to agree with the size of the second dimension of `localArbIndex`.

Currently this call only supports creating a 2D or 3D Grid, and thus, for example, `maxIndex` must be of size 2 or 3.

The arguments are:

[minIndex] Tuple to start the index ranges at. If not present, defaults to /1,1,1,.../.

maxIndex The upper extend of the grid index ranges.

arbIndexCount The number of grid cells in the local DE. It is okay to have 0 grid cell in a local DE.

arbIndexList This 2D array specifies the indices of the PET LOCAL grid cells. The dimensions should be arbIndexCount * number of Distributed grid dimensions where arbIndexCount is the input argument specified below

[coordSys] The coordinate system of the grid coordinate data. For a full list of options, please see Section 55.11. If not specified then defaults to ESMF_COORDSYS_SPH_DEG.

[coordTypeKind] The type/kind of the grid coordinate data. All *numerical* types listed under section 55.61 are supported. If not specified then defaults to ESMF_TYPEKIND_R8.

[coordDep1] The size of the array specifies the number of dimensions of the first coordinate component array. The values specify which of the index dimensions the corresponding coordinate arrays map to. The format should be /ESMF_DIM_ARB/ where /ESMF_DIM_ARB/ is mapped to the collapsed 1D dimension from all the arbitrarily distributed dimensions. n is the dimension that is not distributed (if exists). If not present the default is /ESMF_DIM_ARB/ if the first dimension is arbitararily distributed, or /n/ if not distributed (i.e. n=1) Please see Section 55.2 for a definition of ESMF_DIM_ARB.

[coordDep2] The size of the array specifies the number of dimensions of the second coordinate component array. The values specify which of the index dimensions the corresponding coordinate arrays map to. The format should be /ESMF_DIM_ARB/ where /ESMF_DIM_ARB/ is mapped to the collapsed 1D dimension from all the arbitrarily distributed dimensions. n is the dimension that is not distributed (if exists). If not present the default is /ESMF_DIM_ARB/ if this dimension is arbitararily distributed, or /n/ if not distributed (i.e. n=2) Please see Section 55.2 for a definition of ESMF_DIM_ARB.

[coordDep3] The size of the array specifies the number of dimensions of the third coordinate component array. The values specify which of the index dimensions the corresponding coordinate arrays map to. The format should be /ESMF_DIM_ARB/ where /ESMF_DIM_ARB/ is mapped to the collapsed 1D dimension from all the arbitrarily distributed dimensions. n is the dimension that is not distributed (if exists). If not present the default is /ESMF_DIM_ARB/ if this dimension is arbitararily distributed, or /n/ if not distributed (i.e. n=3) Please see Section 55.2 for a definition of ESMF_DIM_ARB.

[distDim] This array specifies which dimensions are arbitrarily distributed. The size of the array specifies the total distributed dimensions. if not specified, defaults is all dimensions will be arbitrarily distributed. The size has to agree with the size of the second dimension of `localArbIndex`.

[name] `ESMF_Grid` name. !

[rc] Return code; equals `ESMF_SUCCESS` if there are no errors.

32.6.21 ESMF_GridCreateNoPeriDim - Create a Grid with no periodic dim and an irregular distribution

INTERFACE:

```
! Private name; call using ESMF_GridCreateNoPeriDim()
    function ESMF_GridCreateNoPeriDimI(minIndex,        &
      countsPerDEDim1,countsPerDeDim2,                  &
      countsPerDEDim3,                                  &
      coordSys, coordTypeKind,                          &
      coordDep1, coordDep2, coordDep3,                  &
      gridEdgeLWidth, gridEdgeUWidth, gridAlign,        &
      gridMemLBound, indexflag, petMap, name, rc)
```

RETURN VALUE:

```
    type(ESMF_Grid) :: ESMF_GridCreateNoPeriDimI
```

ARGUMENTS:

```
      integer,                   intent(in),  optional :: minIndex(:)
      integer,                   intent(in)            :: countsPerDEDim1(:)
      integer,                   intent(in)            :: countsPerDEDim2(:)
-- The following arguments require argument keyword syntax (e.g. rc=rc). --
      integer,                   intent(in),  optional :: countsPerDEDim3(:)
      type(ESMF_CoordSys_Flag),  intent(in),  optional :: coordSys
      type(ESMF_TypeKind_Flag),  intent(in),  optional :: coordTypeKind
      integer,                   intent(in),  optional :: coordDep1(:)
      integer,                   intent(in),  optional :: coordDep2(:)
      integer,                   intent(in),  optional :: coordDep3(:)
      integer,                   intent(in),  optional :: gridEdgeLWidth(:)
      integer,                   intent(in),  optional :: gridEdgeUWidth(:)
      integer,                   intent(in),  optional :: gridAlign(:)
      integer,                   intent(in),  optional :: gridMemLBound(:)
      type(ESMF_Index_Flag),     intent(in),  optional :: indexflag
      integer,                   intent(in),  optional :: petMap(:,:,:)
      character (len=*),         intent(in),  optional :: name
      integer,                   intent(out), optional :: rc
```

DESCRIPTION:

This method creates a single tile, irregularly distributed grid (see Figure 13) without a periodic dimension. To specify the irregular distribution, the user passes in an array for each grid dimension, where the length of the array is the number of DEs in the dimension. Currently this call only supports creating 2D or 3D Grids. A 2D Grid can be specified using the countsPerDEDim1 and countsPerDEDim2 arguments. A 3D Grid can be specified by also using the optional countsPerDEDim3 argument. The index of each array element in these arguments corresponds to a DE number. The array value at the index is the number of grid cells on the DE in that dimension.

Section 32.3.4 shows an example of using this method to create a 2D Grid with uniformly spaced coordinates. This creation method can also be used as the basis for grids with rectilinear coordinates or curvilinear coordinates.

The arguments are:

[minIndex] Tuple to start the index ranges at. If not present, defaults to /1,1,1,.../.

countsPerDEDim1 This arrays specifies the number of cells per DE for index dimension 1 for the exclusive region (the center stagger location).

countsPerDEDim2 This array specifies the number of cells per DE for index dimension 2 ! for the exclusive region (center stagger location).

[countsPerDEDim3] This array specifies the number of cells per DE for index dimension 3 for the exclusive region (center stagger location). If not specified then grid is 2D.

[coordSys] The coordinate system of the grid coordinate data. For a full list of options, please see Section 55.11. If not specified then defaults to ESMF_COORDSYS_SPH_DEG.

[coordTypeKind] The type/kind of the grid coordinate data. All *numerical* types listed under section 55.61 are supported. If not specified then defaults to ESMF_TYPEKIND_R8.

[coordDep1] This array specifies the dependence of the first coordinate component on the three index dimensions described by `coordsPerDEDim1,2,3`. The size of the array specifies the number of dimensions of the first coordinate component array. The values specify which of the index dimensions the corresponding coordinate arrays map to. If not present the default is 1,2,...,grid rank. !

[coordDep2] This array specifies the dependence of the second coordinate component on the three index dimensions described by `coordsPerDEDim1,2,3`. The size of the array specifies the number of dimensions of the second coordinate component array. The values specify which of the index dimensions the corresponding coordinate arrays map to. If not present the default is 1,2,...,grid rank.

[coordDep3] This array specifies the dependence of the third coordinate component on the three index dimensions described by `coordsPerDEDim1,2,3`. The size of the array specifies the number of dimensions of the third coordinate component array. The values specify which of the index dimensions the corresponding coordinate arrays map to. If not present the default is 1,2,...,grid rank.

[gridEdgeLWidth] The padding around the lower edges of the grid. This padding is between the index space corresponding to the cells and the boundary of the the exclusive region. This extra space is to contain the extra padding for non-center stagger locations, and should be big enough to hold any stagger in the grid. If this and gridAlign are not present then defaults to 0, 0, ..., 0 (all zeros).

[gridEdgeUWidth] The padding around the upper edges of the grid. This padding is between the index space corresponding to the cells and the boundary of the the exclusive region. This extra space is to contain the extra padding for non-center stagger locations, and should be big enough to hold any stagger in the grid. If this and gridAlign are not present then defaults to 1, 1, ..., 1 (all ones).

[gridAlign] Specification of how the stagger locations should align with the cell index space (can be overridden by the individual staggerAligns). If the gridEdgeWidths are not specified than this argument implies the gridEdgeWidths. If the gridEdgeWidths are specified and this argument isn't then this argument is implied by the

gridEdgeWidths. If this and the gridEdgeWidths are not specified, then defaults to -1, -1, ..., -1 (all negative ones).

[gridMemLBound] Specifies the lower index range of the memory of every DE in this Grid. Only used when indexflag is `ESMF_INDEX_USER`. May be overridden by staggerMemLBound.

[indexflag] Indicates the indexing scheme to be used in the new Grid. Please see Section 55.29 for the list of options. If not present, defaults to ESMF_INDEX_DELOCAL.

[petMap] Sets the mapping of pets to the created DEs. This 3D should be of size size(countsPerDEDim1) x size(countsPerDEDim2) x size(countsPerDEDim3). If countsPerDEDim3 isn't present, then the last dimension is of size 1.

[name] `ESMF_Grid` name.

[rc] Return code; equals `ESMF_SUCCESS` if there are no errors.

32.6.22 ESMF_GridCreateNoPeriDim - Create a Grid with no periodic dim and a regular distribution

INTERFACE:

```
! Private name; call using ESMF_GridCreateNoPeriDim()
    function ESMF_GridCreateNoPeriDimR(regDecomp, decompFlag, &
      minIndex, maxIndex,                                     &
      coordSys, coordTypeKind,                                &
      coordDep1, coordDep2, coordDep3,                        &
      gridEdgeLWidth, gridEdgeUWidth, gridAlign,              &
      gridMemLBound, indexflag, petMap, name, rc)
```

RETURN VALUE:

```
    type(ESMF_Grid) :: ESMF_GridCreateNoPeriDimR
```

ARGUMENTS:

```
      integer,                   intent(in),  optional :: regDecomp(:)
      type(ESMF_Decomp_Flag),    intent(in),  optional :: decompflag(:)
      integer,                   intent(in),  optional :: minIndex(:)
      integer,                   intent(in)            :: maxIndex(:)
 -- The following arguments require argument keyword syntax (e.g. rc=rc). --
      type(ESMF_CoordSys_Flag),  intent(in),  optional :: coordSys
      type(ESMF_TypeKind_Flag),  intent(in),  optional :: coordTypeKind
      integer,                   intent(in),  optional :: coordDep1(:)
      integer,                   intent(in),  optional :: coordDep2(:)
      integer,                   intent(in),  optional :: coordDep3(:)
      integer,                   intent(in),  optional :: gridEdgeLWidth(:)
      integer,                   intent(in),  optional :: gridEdgeUWidth(:)
      integer,                   intent(in),  optional :: gridAlign(:)
      integer,                   intent(in),  optional :: gridMemLBound(:)
      type(ESMF_Index_Flag),     intent(in),  optional :: indexflag
```

```
 integer,                    intent(in),  optional :: petMap(:,:,:)
character (len=*),          intent(in),  optional :: name
integer,                    intent(out), optional :: rc
```

DESCRIPTION:

This method creates a single tile, regularly distributed grid (see Figure 13) with no periodic dimension. To specify the distribution, the user passes in an array (`regDecomp`) specifying the number of DEs to divide each dimension into. The array `decompFlag` indicates how the division into DEs is to occur. The default is to divide the range as evenly as possible. Currently this call only supports creating a 2D or 3D Grid, and thus, for example, `maxIndex` must be of size 2 or 3.

The arguments are:

[regDecomp] List that has the same number of elements as `maxIndex`. Each entry is the number of decounts for that dimension. If not specified, the default decomposition will be petCountx1x1..x1.

[decompflag] List of decomposition flags indicating how each dimension of the tile is to be divided between the DEs. The default setting is `ESMF_DECOMP_BALANCED` in all dimensions. Please see Section 55.14 for a full description of the possible options. Note that currently the option `ESMF_DECOMP_CYCLIC` isn't supported in Grid creation.

[minIndex] The bottom extent of the grid array. If not given then the value defaults to /1,1,1,.../.

maxIndex The upper extent of the grid array.

[coordSys] The coordinate system of the grid coordinate data. For a full list of options, please see Section 55.11. If not specified then defaults to ESMF_COORDSYS_SPH_DEG.

[coordTypeKind] The type/kind of the grid coordinate data. All *numerical* types listed under section 55.61 are supported. If not specified then defaults to ESMF_TYPEKIND_R8.

[coordDep1] This array specifies the dependence of the first coordinate component on the three index dimensions described by `coordsPerDEDim1,2,3`. The size of the array specifies the number of dimensions of the first coordinate component array. The values specify which ! of the index dimensions the corresponding coordinate arrays map to. If not present the default is 1,2,...,grid rank.

[coordDep2] This array specifies the dependence of the second coordinate component on the three index dimensions described by `coordsPerDEDim1,2,3`. The size of the array specifies the number of dimensions of the second coordinate component array. The values specify which of the index dimensions the corresponding coordinate arrays map to. If not present the default is 1,2,...,grid rank.

[coordDep3] This array specifies the dependence of the third coordinate component on the three index dimensions described by `coordsPerDEDim1,2,3`. The size of the array specifies the number of dimensions of the third coordinate component array. The values specify which of the index dimensions the corresponding coordinate arrays map to. If not present the default is 1,2,...,grid rank.

[gridEdgeLWidth] The padding around the lower edges of the grid. This padding is between the index space corresponding to the cells and the boundary of the the exclusive region. This extra space is to contain the extra padding for non-center stagger locations, and should be big enough to hold any stagger in the grid. If this and gridAlign are not present then defaults to 0, 0, ..., 0 (all zeros).

[gridEdgeUWidth] The padding around the upper edges of the grid. This padding is between the index space corresponding to the cells and the boundary of the the exclusive region. This extra space is to contain the extra padding for non-center stagger locations, and should be big enough to hold any stagger in the grid. If this and gridAlign are not present then defaults to 1, 1, ..., 1 (all ones).

[gridAlign] Specification of how the stagger locations should align with the cell index space (can be overridden by the individual staggerAligns). If the gridEdgeWidths are not specified than this argument implies the gridEdgeWidths. If the gridEdgeWidths are specified and this argument isn't then this argument is implied by the gridEdgeWidths. If this and the gridEdgeWidths are not specified, then defaults to -1, -1, ..., -1 (all negative ones).

[gridMemLBound] Specifies the lower index range of the memory of every DE in this Grid. Only used when indexflag is `ESMF_INDEX_USER`. May be overridden by staggerMemLBound.

[indexflag] Indicates the indexing scheme to be used in the new Grid. Please see Section 55.29 for the list of options. If not present, defaults to ESMF_INDEX_DELOCAL.

[petMap] Sets the mapping of pets to the created DEs. This 3D ! should be of size regDecomp(1) x regDecomp(2) x regDecomp(3) If the Grid is 2D, then the last dimension is of size 1.

[name] `ESMF_Grid` name.

[rc] Return code; equals `ESMF_SUCCESS` if there are no errors.

32.6.23 ESMF_GridCreateNoPeriDim - Create a Grid with no periodic dim and an arbitrary distribution

INTERFACE:

```
! Private name; call using ESMF_GridCreateNoPeriodic()
    function ESMF_GridCreateNoPeriDimA(minIndex, maxIndex, &
      arbIndexCount, arbIndexList,                         &
      coordSys, coordTypeKind,                             &
      coordDep1, coordDep2, coordDep3,                     &
      distDim, name, rc)
```

RETURN VALUE:

```
type(ESMF_Grid) :: ESMF_GridCreateNoPeriDimA
```

ARGUMENTS:

```
        integer,                   intent(in),  optional :: minIndex(:)
        integer,                   intent(in)            :: maxIndex(:)
        integer,                   intent(in)                  :: arbIndexCount
        integer,                   intent(in)            :: arbIndexList(:,:)
 -- The following arguments require argument keyword syntax (e.g. rc=rc). --
        type(ESMF_CoordSys_Flag),  intent(in),  optional :: coordSys
        type(ESMF_TypeKind_Flag),  intent(in),  optional :: coordTypeKind
        integer,                   intent(in),  optional :: coordDep1(:)
        integer,                   intent(in),  optional :: coordDep2(:)
        integer,                   intent(in),  optional :: coordDep3(:)
        integer,                   intent(in),  optional :: distDim(:)
        character (len=*),         intent(in),  optional :: name
        integer,                   intent(out), optional :: rc
```

DESCRIPTION:

This method creates a single tile, arbitrarily distributed grid (see Figure 13) with no periodic dimension. To specify the arbitrary distribution, the user passes in an 2D array of local indices, where the first dimension is the number of local grid cells specified by `localArbIndexCount` and the second dimension is the number of distributed dimensions.

`distDim` specifies which grid dimensions are arbitrarily distributed. The size of `distDim` has to agree with the size of the second dimension of `localArbIndex`.

Currently this call only supports creating a 2D or 3D Grid, and thus, for example, `maxIndex` must be of size 2 or 3.

The arguments are:

[minIndex] Tuple to start the index ranges at. If not present, defaults to /1,1,1,.../.

maxIndex The upper extend of the grid index ranges.

arbIndexCount The number of grid cells in the local DE. It is okay to have 0 grid cell in a local DE.

arbIndexList ! This 2D array specifies the indices of the PET LOCAL grid cells. The dimensions should be arbIndexCount * number of Distributed grid dimensions ! where arbIndexCount is the input argument specified below

[coordSys] The coordinate system of the grid coordinate data. For a full list of options, please see Section 55.11. If not specified then defaults to ESMF_COORDSYS_SPH_DEG.

[coordTypeKind] The type/kind of the grid coordinate data. All *numerical* types listed under section 55.61 are supported. If not specified then defaults to ESMF_TYPEKIND_R8.

[coordDep1] The size of the array specifies the number of dimensions of the first coordinate component array. The values specify which of the index dimensions the corresponding coordinate arrays map to. The format should be /ESMF_DIM_ARB/ where /ESMF_DIM_ARB/ is mapped to the collapsed 1D dimension from all the arbitrarily distributed dimensions. n is the dimension that is not distributed (if exists). If not present the default is /ESMF_DIM_ARB/ if the first dimension is arbitararily distributed, or /n/ if not distributed (i.e. n=1) Please see Section 55.2 for a definition of ESMF_DIM_ARB.

[coordDep2] The size of the array specifies the number of dimensions of the second coordinate component array. The values specify which of the index dimensions the corresponding coordinate arrays map to. The format should be /ESMF_DIM_ARB/ where /ESMF_DIM_ARB/ is mapped to the collapsed 1D dimension from all the arbitrarily distributed dimensions. n is the dimension that is not distributed (if exists). If not present the default is /ESMF_DIM_ARB/ if this dimension is arbitararily distributed, or /n/ if not distributed (i.e. n=2) Please see Section 55.2 for a definition of ESMF_DIM_ARB.

[coordDep3] The size of the array specifies the number of dimensions of the third coordinate component array. The values specify which of the index dimensions the corresponding coordinate arrays map to. The format should be /ESMF_DIM_ARB/ where /ESMF_DIM_ARB/ is mapped to the collapsed 1D dimension from all the arbitrarily distributed dimensions. n is the dimension that is not distributed (if exists). If not present the default is /ESMF_DIM_ARB/ if this dimension is arbitararily distributed, or /n/ if not distributed (i.e. n=3) Please see Section 55.2 for a definition of ESMF_DIM_ARB.

[distDim] This array specifies which dimensions are arbitrarily distributed. ! The size of the array specifies the total distributed dimensions. if not specified, defaults is all dimensions will be arbitrarily distributed. The size has to agree with the size of the second dimension of `localArbIndex`.

[name] `ESMF_Grid` name.

[rc] Return code; equals `ESMF_SUCCESS` if there are no errors.

32.6.24 ESMF_GridCreate1PeriDimUfrm - Create a uniform Grid with one periodic dim and a regular distribution

INTERFACE:

```
! Private name; call using ESMF_GridCreate1PeriDimUfrm()
    function ESMF_GridCreate1PeriDimUfrmR(minIndex, maxIndex, &
         minCornerCoord, maxCornerCoord, &
         regDecomp, decompFlag, &
         polekindflag, coordSys, staggerLocList, &
         ignoreNonPeriCoord, petMap, name, rc)
```

RETURN VALUE:

```
type(ESMF_Grid) :: ESMF_GridCreate1PeriDimUfrmR
```

ARGUMENTS:

```
        integer,                    intent(in),  optional :: minIndex(:)
        integer,                    intent(in)            :: maxIndex(:)
        real(ESMF_KIND_R8),         intent(in)            :: minCornerCoord(:)
        real(ESMF_KIND_R8),         intent(in)            :: maxCornerCoord(:)
 -- The following arguments require argument keyword syntax (e.g. rc=rc). --
        integer,                    intent(in),  optional :: regDecomp(:)
        type(ESMF_Decomp_Flag),     intent(in),  optional :: decompflag(:)
        type(ESMF_PoleKind_Flag),   intent(in),  optional :: polekindflag(2)
        type(ESMF_CoordSys_Flag),   intent(in),  optional :: coordSys
        type(ESMF_StaggerLoc),      intent(in),  optional :: staggerLocList(:)
        logical,                    intent(in),  optional :: ignoreNonPeriCoord
        integer,                    intent(in),  optional :: petMap(:,:,:)
        character (len=*),          intent(in),  optional :: name
        integer,                    intent(out), optional :: rc
```

DESCRIPTION:

This method creates a single tile, regularly distributed grid (see Figure 13) with one periodic dimension. The periodic dimension in the resulting grid will be dimension 1. The dimension with the poles at either end (i.e. the pole dimension) will be dimension 2.

The grid will have its coordinates uniformly spread between the ranges specified by the user. The coordinates are ESMF_TYPEKIND_R8. Currently, this method only fills the center stagger with coordinates, and the `minCornerCoord` and `maxCornerCoord` arguments give the boundaries of the center stagger.

To specify the distribution, the user passes in an array (`regDecomp`) specifying the number of DEs to divide each dimension into. The array `decompFlag` indicates how the division into DEs is to occur. The default is to divide the range as evenly as possible. Currently this call only supports creating a 2D or 3D Grid, and thus, for example, `maxIndex` must be of size 2 or 3.

The following arguments have been set to non-typical values and so there is a reasonable possibility that they may change in the future to be inconsistent with other Grid create interfaces:

The arguments coordDep1, coordDep2, and coordDep3 have internally been set to 1, 2, and 3 respectively. This was done because this call creates a uniform grid and so only 1D arrays are needed to hold the coordinates. This means the coordinate arrays will be 1D.

The argument indexFlag has internally been set to ESMF_INDEX_GLOBAL. This means that the grid created from this function will have a global index space.

The arguments are:

[minIndex] The bottom extent of the grid array. If not given then the value defaults to /1,1,1,.../.

maxIndex The upper extent of the grid array.

minCornerCoord The coordinates of the corner of the grid that corresponds to `minIndex`. size(minCornerCoord) must be equal to size(maxIndex).

maxCornerCoord The coordinates of the corner of the grid that corresponds to `maxIndex`. size(maxCornerCoord) must be equal to size(maxIndex).

[regDecomp] A ndims-element array specifying how the grid is decomposed. Each entry is the number of decounts for that dimension.

[decompflag] List of decomposition flags indicating how each dimension of the tile is to be divided between the DEs. The default setting is `ESMF_DECOMP_BALANCED` in all dimensions. Please see Section 55.14 for a full description of the possible options. Note that currently the option `ESMF_DECOMP_CYCLIC` isn't supported in Grid creation.

[polekindflag] Two item array which specifies the type of connection which occurs at the pole. The value in polekindflag(1) specifies the connection that occurs at the minimum end of the pole dimension. The value in polekindflag(2) specifies the connection that occurs at the maximum end of the pole dimension. Please see Section 32.2.5 for a full list of options. If not specified, the default is `ESMF_POLEKIND_MONOPOLE` for both.

[coordSys] The coordinate system of the grid coordinate data. For a full list of options, please see Section 55.11. If not specified then defaults to ESMF_COORDSYS_SPH_DEG.

[staggerLocList] The list of stagger locations to fill with coordinates. Please see Section 32.2.6 for a description of the available stagger locations. If not present, then no staggers are added or filled.

[ignoreNonPeriCoord] If .true., do not check if the coordinates for the periodic dimension (i.e. dim=1) specify a full periodic range (e.g. 0 to 360 degrees). If not specified, defaults to .false. .

[petMap] Sets the mapping of pets to the created DEs. This 3D should be of size regDecomp(1) x regDecomp(2) x regDecomp(3) If the Grid is 2D, then the last dimension is of size 1.

[name] `ESMF_Grid` name.

[rc] Return code; equals `ESMF_SUCCESS` if there are no errors.

32.6.25 ESMF_GridCreate1PeriDimUfrm - Create a uniform Grid with one periodic dim and a block distribution

INTERFACE:

```
! Private name; call using ESMF_GridCreate1PeriDimUfrm()
function ESMF_GridCreate1PeriDimUfrmB(minIndex, maxIndex, &
          minCornerCoord, maxCornerCoord, &
          deBlockList, deLabelList, &
          polekindflag, coordSys, staggerLocList, &
          ignoreNonPeriCoord, petMap, name, rc)
```

RETURN VALUE:

```
type(ESMF_Grid) :: ESMF_GridCreate1PeriDimUfrmB
```

ARGUMENTS:

```
integer,                    intent(in),  optional :: minIndex(:)
integer,                    intent(in)            :: maxIndex(:)
real(ESMF_KIND_R8),         intent(in)            :: minCornerCoord(:)
real(ESMF_KIND_R8),         intent(in)            :: maxCornerCoord(:)
integer,                    intent(in)            :: deBlockList(:,:,:)
integer,                    intent(in),  optional :: deLabelList(:)
type(ESMF_PoleKind_Flag),   intent(in),  optional :: polekindflag(2)
type(ESMF_CoordSys_Flag),   intent(in),  optional :: coordSys
type(ESMF_StaggerLoc),      intent(in),  optional :: staggerLocList(:)
logical,                    intent(in),  optional :: ignoreNonPeriCoord
integer,                    intent(in),  optional :: petMap(:,:,:)
character (len=*),          intent(in),  optional :: name
integer,                    intent(out), optional :: rc
```

DESCRIPTION:

This method creates a single tile, regularly distributed grid (see Figure 13) with one periodic dimension. The periodic dimension in the resulting grid will be dimension 1. The dimension with the poles at either end (i.e. the pole dimension) will be dimension 2.

The grid will have its coordinates uniformly spread between the ranges specified by the user. The coordinates are ESMF_TYPEKIND_R8. Currently, this method only fills the center stagger with coordinates, and the `minCornerCoord` and `maxCornerCoord` arguments give the boundaries of the center stagger.

To specify the distribution, the user passes in an array (`deBlockList`) specifying index space blocks for each DE.

The following arguments have been set to non-typical values and so there is a reasonable possibility that they may change in the future to be inconsistent with other Grid create interfaces:

The arguements coordDep1, coordDep2, and coordDep3 have internally been set to 1, 2, and 3 respectively. This was done because this call creates a uniform grid and so only 1D arrays are needed to hold the coordinates. This means the coordinate arrays will be 1D.

The argument indexFlag has internally been set to ESMF_INDEX_GLOBAL. This means that the grid created from this function will have a global index space.

The arguments are:

[minIndex] The bottom extent of the grid array. If not given then the value defaults to /1,1,1,.../.

maxIndex The upper extent of the grid array.

minCornerCoord The coordinates of the corner of the grid that corresponds to `minIndex`. size(minCornerCoord) must be equal to size(maxIndex).

maxCornerCoord The coordinates of the corner of the grid that corresponds to `maxIndex`. size(maxCornerCoord) must be equal to size(maxIndex).

deBlockList List of DE-local LR blocks. The third index of `deBlockList` steps through the deBlock elements, which are defined by the first two indices. The first index must be of size `dimCount` and the second index must be of size 2. Each 2D element of `deBlockList` defined by the first two indices hold the following information.

```
 +--------------------------------------> 2nd index
 |    1                2
 | 1  minIndex(1)    maxIndex(1)
 | 2  minIndex(2)    maxIndex(2)
 | .  minIndex(.)    maxIndex(.)
 | .
 v
1st index
```

It is required that there be no overlap between the LR segments defined by deBlockList.

[deLabelList] List assigning DE labels to the default sequence of DEs. The default sequence is given by the order of DEs in the `deBlockList` argument.

[polekindflag] Two item array which specifies the type of connection which occurs at the pole. The value in polekindflag(1) specifies the connection that occurs at the minimum end of the pole dimension. The value in polekindflag(2) specifies the connection that occurs at the maximum end of the pole dimension. Please see Section 32.2.5 for a full list of options. If not specified, the default is `ESMF_POLEKIND_MONOPOLE` for both.

[coordSys] The coordinate system of the grid coordinate data. For a full list of options, please see Section 55.11. If not specified then defaults to ESMF_COORDSYS_SPH_DEG.

[staggerLocList] The list of stagger locations to fill with coordinates. Please see Section 32.2.6 for a description of the available stagger locations. If not present, then no staggers are added or filled.

[ignoreNonPeriCoord] If .true., do not check if the coordinates for the periodic dimension (i.e. dim=1) specify a full periodic range (e.g. 0 to 360 degrees). If not specified, defaults to .false. .

[petMap] Sets the mapping of pets to the created DEs. This 3D should be of size regDecomp(1) x regDecomp(2) x regDecomp(3) If the Grid is 2D, then the last dimension is of size 1.

[name] `ESMF_Grid` name.

[rc] Return code; equals `ESMF_SUCCESS` if there are no errors.

32.6.26 ESMF_GridCreateNoPeriDimUfrm - Create a uniform Grid with no periodic dim and a regular distribution

INTERFACE:

```
! Private name; call using ESMF_GridCreateNoPeriDimUfrm()
     function ESMF_GridCreateNoPeriDimUfrmR(minIndex, maxIndex, &
       minCornerCoord, maxCornerCoord, &
       regDecomp, decompFlag, &
       coordSys, staggerLocList, petMap, name, rc)
```

RETURN VALUE:

```
     type(ESMF_Grid) :: ESMF_GridCreateNoPeriDimUfrmR
```

ARGUMENTS:

```
        integer,                    intent(in),  optional :: minIndex(:)
        integer,                    intent(in)            :: maxIndex(:)
        real(ESMF_KIND_R8),         intent(in)            :: minCornerCoord(:)
        real(ESMF_KIND_R8),         intent(in)            :: maxCornerCoord(:)
 -- The following arguments require argument keyword syntax (e.g. rc=rc). --
        integer,                    intent(in),  optional :: regDecomp(:)
        type(ESMF_Decomp_Flag),     intent(in),  optional :: decompflag(:)
        type(ESMF_CoordSys_Flag),   intent(in),  optional :: coordSys
        type(ESMF_StaggerLoc),      intent(in),  optional :: staggerLocList(:)
        integer,                    intent(in),  optional :: petMap(:,:,:)
        character (len=*),          intent(in),  optional :: name
        integer,                    intent(out), optional :: rc
```

DESCRIPTION:

This method creates a single tile, regularly distributed grid (see Figure 13) with no periodic dimension.

The resulting grid will have its coordinates uniformly spread between the ranges specified by the user. The coordinates are ESMF_TYPEKIND_R8. Currently, this method only fills the center stagger with coordinates, and the `minCornerCoord` and `maxCornerCoord` arguments give the boundaries of the center stagger.

To specify the distribution, the user passes in an array (`regDecomp`) specifying the number of DEs to divide each dimension into. The array `decompFlag` indicates how the division into DEs is to occur. The default is to divide the range as evenly as possible. Currently this call only supports creating a 2D or 3D Grid, and thus, for example, `maxIndex` must be of size 2 or 3.

The following arguments have been set to non-typical values and so there is a reasonable possibility that they may change in the future to be inconsistent with other Grid create interfaces:

The arguements coordDep1, coordDep2, and coordDep3 have internally been set to 1, 2, and 3 respectively. This was done because this call creates a uniform grid and so only 1D arrays are needed to hold the coordinates. This means the coordinate arrays will be 1D.

The argument indexFlag has internally been set to ESMF_INDEX_GLOBAL. This means that the grid created from this function will have a global index space.

The arguments are:

[minIndex] The bottom extent of the grid array. If not given then the value defaults to /1,1,1,.../.

maxIndex The upper extent of the grid array.

minCornerCoord The coordinates of the corner of the grid that corresponds to `minIndex`. size(minCornerCoord) must be equal to size(maxIndex).

maxCornerCoord The coordinates of the corner of the grid that corresponds to `maxIndex`. size(maxCornerCoord) must be equal to size(maxIndex).

[regDecomp] A ndims-element array specifying how the grid is decomposed. Each entry is the number of decounts for that dimension.

[decompflag] List of decomposition flags indicating how each dimension of the tile is to be divided between the DEs. The default setting is `ESMF_DECOMP_BALANCED` in all dimensions. Please see Section 55.14 for a full description of the possible options. Note that currently the option `ESMF_DECOMP_CYCLIC` isn't supported in Grid creation.

[coordSys] The coordinate system of the grid coordinate data. For a full list of options, please see Section 55.11. If not specified then defaults to ESMF_COORDSYS_SPH_DEG.

[staggerLocList] The list of stagger locations to fill with coordinates. Please see Section 32.2.6 for a description of the available stagger locations. If not present, then no staggers are added or filled.

[petMap] Sets the mapping of pets to the created DEs. This 3D should be of size regDecomp(1) x regDecomp(2) x regDecomp(3) If the Grid is 2D, then the last dimension is of size 1.

[name] `ESMF_Grid` name.

[rc] Return code; equals `ESMF_SUCCESS` if there are no errors.

32.6.27 ESMF_GridCreateCubedSphere - Create a multi-tile cubed sphere Grid with regular decomposition

INTERFACE:

```
! Private name; call using ESMF_GridCreateCubedSphere()
function ESMF_GridCreateCubedSphereReg(tileSize,&
     regDecompPTile, decompflagPTile,                          &
     coordSys, coordTypeKind,                                  &
     deLabelList, staggerLocList,                              &
     delayout, indexflag, name, transformArgs, coordCalcFlag,  &
     rc)
```

RETURN VALUE:

```
type(ESMF_Grid) :: ESMF_GridCreateCubedSphereReg
```

ARGUMENTS:

```
     integer,                        intent(in)            :: tilesize
 -- The following arguments require argument keyword syntax (e.g. rc=rc). --
     integer,                        intent(in),  optional :: regDecompPTile(:,:)
     type(ESMF_Decomp_Flag), target, intent(in),  optional :: decompflagPTile(:,:)
     type(ESMF_CoordSys_Flag),       intent(in),  optional :: coordSys
     type(ESMF_TypeKind_Flag),       intent(in),  optional :: coordTypeKind
     integer,                        intent(in),  optional :: deLabelList(:)
     type(ESMF_StaggerLoc),          intent(in),  optional :: staggerLocList(:)
     type(ESMF_DELayout),            intent(in),  optional :: delayout
     type(ESMF_Index_Flag),          intent(in),  optional :: indexflag
     character(len=*),               intent(in),  optional :: name
     type(ESMF_CubedSphereTransform_Args), intent(in),  optional :: transformArgs
     type(ESMF_CubedSphereCalc_Flag),intent(in),  optional :: coordCalcFlag
     integer,                        intent(out), optional :: rc
```

DESCRIPTION:

Create a six-tile `ESMF_Grid` for a Cubed Sphere grid using regular decomposition. Each tile can have different decomposition. The grid coordinates are generated based on the algorithm used by GEOS-5, The tile resolution is defined by tileSize.

The arguments are:

tilesize The number of elements on each side of the tile of the Cubed Sphere grid.

[regDecompPTile] List of DE counts for each dimension. The second index steps through the tiles. The total `deCount` is determined as the sum over the products of `regDecompPTile` elements for each tile. By default every tile is decomposed in the same way. If the total PET count is less than 6, one tile will be assigned to one DE and the DEs will be assigned to PETs sequentially, therefore, some PETs may have more than one DE. If the total PET count is greater than 6, the total number of DEs will be a multiple of 6 and less than or equal to the total PET count. For instance, if the total PET count is 16, the total DE count will be 12 with each tile decomposed into 1x2 blocks. The 12 DEs are mapped to the first 12 PETs and the remaining 4 PETs have no DEs locally, unless an optional `delayout` is provided.

[decompflagPTile] List of decomposition flags indicating how each dimension of each tile is to be divided between the DEs. The default setting is `ESMF_DECOMP_BALANCED` in all dimensions for all tiles. See section 55.14 for a list of valid decomposition flag options. The second index indicates the tile number.

[deLabelList] List assigning DE labels to the default sequence of DEs. The default sequence is given by the column major order of the `regDecompPTile` elements in the sequence as they appear following the tile index.

[staggerLocList] The list of stagger locations to fill with coordinates. Only `ESMF_STAGGERLOC_CENTER` and `ESMF_STAGGERLOC_CORNER` are supported. If not present, no coordinates will be added or filled.

[coordSys] The coordinate system of the grid coordinate data. Only ESMF_COORDSYS_SPH_DEG and ESMF_COORDSYS_SPH_RAD are supported. If not specified then defaults to ESMF_COORDSYS_SPH_DEG.

[coordTypeKind] The type/kind of the grid coordinate data. Only ESMF_TYPEKIND_R4 and ESMF_TYPEKIND_R8 are supported. If not specified then defaults to ESMF_TYPEKIND_R8.

[delayout] Optional `ESMF_DELayout` object to be used. By default a new DELayout object will be created with as many DEs as there are PETs, or tiles, which ever is greater. If a DELayout object is specified, the number of DEs must match `regDecompPTile`, if present. In the case that `regDecompPTile` was not specified, the `deCount` must be at least that of the default DELayout. The `regDecompPTile` will be constructed accordingly.

[indexflag] Indicates the indexing scheme to be used in the new Grid. Please see section 55.29 for the list of options. If not present, defaults to ESMF_INDEX_DELOCAL.

[name] `ESMF_Grid` name.

[transformArgs] A data type containing the stretch factor, target longitude, and target latitude to perform a Schmidt transformation on the Cubed-Sphere grid. 32.3.11 for details.

[coordCalcFlag] A flag which controls the method used to calculate the cubed sphere coordinates. Please see section 55.12 for a list of options. If not set, defaults to `ESMF_CUBEDSPHERECALC_1TILE` which was the original method used to calculate coordinates.

[rc] Return code; equals `ESMF_SUCCESS` if there are no errors.

32.6.28 ESMF_GridCreateCubedSphere - Create a multi-tile cubed sphere Grid with irregular decomposition

INTERFACE:

```
! Private name; call using ESMF_GridCreateCubedSphere()
function ESMF_GridCreateCubedSphereIReg(tileSize,              &
      countsPerDEDim1PTile, countsPerDEDim2PTile,              &
                                                 &
      coordSys, coordTypeKind,                                 &
      deLabelList, staggerLocList,                             &
      delayout, indexflag, name, transformArgs, coordCalcFlag, &
      rc)
```

RETURN VALUE:

```
type(ESMF_Grid) :: ESMF_GridCreateCubedSphereIReg
```

ARGUMENTS:

```
     integer,                        intent(in)            :: tilesize
     integer,                        intent(in)            :: countsPerDEDim1PTile(:,:)
     integer,                        intent(in)            :: countsPerDEDim2PTile(:,:)
 -- The following arguments require argument keyword syntax (e.g. rc=rc). --
     type(ESMF_CoordSys_Flag),       intent(in),  optional :: coordSys
     type(ESMF_TypeKind_Flag),       intent(in),  optional :: coordTypeKind
     integer,                        intent(in),  optional :: deLabelList(:)
     type(ESMF_StaggerLoc),          intent(in),  optional :: staggerLocList(:)
     type(ESMF_DELayout),            intent(in),  optional :: delayout
     type(ESMF_Index_Flag),          intent(in),  optional :: indexflag
     character(len=*),               intent(in),  optional :: name
     type(ESMF_CubedSphereTransform_Args), intent(in),  optional :: transformArgs
     type(ESMF_CubedSphereCalc_Flag),intent(in),  optional :: coordCalcFlag
     integer,                        intent(out), optional :: rc
```

DESCRIPTION:

Create a six-tile `ESMF_Grid` for a Cubed Sphere grid using irregular decomposition. Each tile can have different decomposition. The grid coordinates are generated based on the algorithm used by GEOS-5, The tile resolution is defined by tileSize.

The arguments are:

tilesize The number of elements on each side of the tile of the Cubed Sphere grid.

countsPerDEDim1PTile This array specifies the number of cells per DE for index dimension 1 for the center stagger location. The second index steps through the tiles. If each tile is decomposed into different number of DEs, the first dimension is the maximal DEs of all the tiles.

countsPerDEDim2PTile This array specifies the number of cells per DE for index dimension 2 for the center stagger location. The second index steps through the tiles. If each tile is decomposed into different number of DEs, the first dimension is the maximal DEs of all the tiles.

[coordSys] The coordinate system of the grid coordinate data. Only ESMF_COORDSYS_SPH_DEG and ESMF_COORDSYS_SPH_RAD are supported. If not specified then defaults to ESMF_COORDSYS_SPH_DEG.

[coordTypeKind] The type/kind of the grid coordinate data. Only ESMF_TYPEKIND_R4 and ESMF_TYPEKIND_R8 are supported. If not specified then defaults to ESMF_TYPEKIND_R8.

[deLabelList] List assigning DE labels to the default sequence of DEs. The default sequence is given by the column major order in the sequence as they appear in `countsPerDEDim1PTile`, followed by `countsPerDEDim2PTile`, then the tile index.

[staggerLocList] The list of stagger locations to fill with coordinates. Only `ESMF_STAGGERLOC_CENTER` and `ESMF_STAGGERLOC_CORNER` are supported. If not present, no coordinates will be added or filled.

[delayout] Optional ESMF_DELayout object to be used. If a delayout object is specified, the number of DEs must match with the total DEs defined in `countsPerDEDim1PTile` and `countsPerDEDim2PTile`.

[indexflag] Indicates the indexing scheme to be used in the new Grid. Please see Section 55.29 for the list of options. If not present, defaults to ESMF_INDEX_DELOCAL.

[name] `ESMF_Grid` name.

[transformArgs] A data type containing the stretch factor, target longitude, and target latitude to perform a Schmidt transformation on the Cubed-Sphere grid. See section 32.3.11 for details.

[coordCalcFlag] A flag which controls the method used to calculate the cubed sphere coordinates. Please see section 55.12 for a list of options. If not set, defaults to `ESMF_CUBEDSPHERECALC_1TILE` which was the original method used to calculate coordinates.

[rc] Return code; equals `ESMF_SUCCESS` if there are no errors.

32.6.29 ESMF_GridCreateMosaic - Create a multi-tile Grid object with regular decomposition using the grid definition from a GRIDSPEC Mosaic file.

INTERFACE:

```
function ESMF_GridCreateMosaicReg(filename,regDecompPTile, decompflagPTile, &
      coordTypeKind, deLabelList, staggerLocList, delayout, indexflag, name, tileFilePat
```

RETURN VALUE:

```
type(ESMF_Grid) :: ESMF_GridCreateMosaicReg
```

ARGUMENTS:

```
 character(len=*),                intent(in)            :: filename
-- The following arguments require argument keyword syntax (e.g. rc=rc). --
 integer,                         intent(in),  optional :: regDecompPTile(:,:)
 type(ESMF_Decomp_Flag), target,  intent(in),  optional :: decompflagPTile(:,:)
 type(ESMF_TypeKind_Flag),        intent(in),  optional :: coordTypeKind
 integer,                         intent(in),  optional :: deLabelList(:)
 type(ESMF_StaggerLoc),           intent(in),  optional :: staggerLocList(:)
 type(ESMF_DELayout),             intent(in),  optional :: delayout
 type(ESMF_Index_Flag),           intent(in),  optional :: indexflag
 character(len=*),                intent(in),  optional :: name
 character(len=*),                intent(in),  optional :: tileFilePath
 integer,                         intent(out), optional :: rc
```

DESCRIPTION:

Create a multiple-tile `ESMF_Grid` based on the definition from a GRIDSPEC Mosaic file and its associated tile files using regular decomposition. Each tile can have different decomposition. The tile connections are defined in a GRIDSPEC format Mosaic file. And each tile's coordination is defined in a separate NetCDF file. The coordinates defined in the tile file is so-called "Super Grid". In other words, the dimensions of the coordinate variables are `(2*xdim+1, 2*ydim+1)` if `(xdim, ydim)` is the size of the tile. The Super Grid combines the corner, the edge and the center coordinates in one big array. A Mosaic file may contain just one tile. If a Mosaic contains multiple tiles. Each tile is a logically rectangular lat/lon grid. Currently, all the tiles have to be the same size. We will remove this limitation in the future release.

The arguments are:

filename The name of the GRIDSPEC Mosaic file.

[regDecompPTile] List of DE counts for each dimension. The second index steps through the tiles. The total `deCount` is determined as the sum over the products of `regDecompPTile` elements for each tile. By default every tile is decomposed in the same way. If the total PET count is less than the tile count, one tile will be assigned to one DE and the DEs will be assigned to PETs sequentially, therefore, some PETs may have more than one DE. If the total PET count is greater than the tile count, the total number of DEs will be a multiple of the tile count and less than or equal to the total PET count. For instance, if the total PET count is 16 and the tile count is 6, the total DE count will be 12 with each tile decomposed into 1x2 blocks. The 12 DEs are mapped to the first 12 PETs and the remaining 4 PETs have no DEs locally, unless an optional `delayout` is provided.

[decompflagPTile] List of decomposition flags indicating how each dimension of each tile is to be divided between the DEs. The default setting is `ESMF_DECOMP_BALANCED` in all dimensions for all tiles. See section 55.14 for a list of valid decomposition flag options. The second index indicates the tile number.

[coordTypeKind] The type/kind of the grid coordinate data. Only ESMF_TYPEKIND_R4 and ESMF_TYPEKIND_R8 are supported. If not specified then defaults to ESMF_TYPEKIND_R8.

[deLabelList] List assigning DE labels to the default sequence of DEs. The default sequence is given by the column major order of the `regDecompPTile` elements in the sequence as they appear following the tile index.

[staggerLocList] The list of stagger locations to fill with coordinates. Please see Section 32.2.6 for a description of the available stagger locations. If not present, no coordinates will be added or filled.

[delayout] Optional `ESMF_DELayout` object to be used. By default a new DELayout object will be created with as many DEs as there are PETs, or tiles, which ever is greater. If a DELayout object is specified, the number of DEs must match `regDecompPTile`, if present. In the case that `regDecompPTile` was not specified, the `deCount` must be at least that of the default DELayout. The `regDecompPTile` will be constructed accordingly.

[indexflag] Indicates the indexing scheme to be used in the new Grid. Please see Section 55.29 for the list of options. If not present, defaults to ESMF_INDEX_DELOCAL.

[name] `ESMF_Grid` name.

[tileFilePath] Optional argument to define the path where the tile files reside. If it is given, it overwrites the path defined in `gridlocation` variable in the mosaic file.

[rc] Return code; equals `ESMF_SUCCESS` if there are no errors.

32.6.30 ESMF_GridCreateMosaic - Create a multi-tile Grid object with irregular decomposition using the grid definition from a GRIDSPEC Mosaic file.

INTERFACE:

```
function ESMF_GridCreateMosaicIReg(filename,                    &
        countsPerDEDim1PTile, countsPerDEDim2PTile,             &
                                                &
        coordTypeKind,                                          &
        deLabelList, staggerLocList,                            &
        delayout, indexflag, name, tileFilePath, rc)
```

RETURN VALUE:

```
type(ESMF_Grid) :: ESMF_GridCreateMosaicIReg
```

ARGUMENTS:

```
     character(len=*),               intent(in)            :: filename
     integer,                        intent(in)            :: countsPerDEDim1PTile(:,:)
     integer,                        intent(in)            :: countsPerDEDim2PTile(:,:)
 -- The following arguments require argument keyword syntax (e.g. rc=rc). --
     type(ESMF_TypeKind_Flag),       intent(in),  optional :: coordTypeKind
     integer,                        intent(in),  optional :: deLabelList(:)
     type(ESMF_StaggerLoc),          intent(in),  optional :: staggerLocList(:)
     type(ESMF_DELayout),            intent(in),  optional :: delayout
     type(ESMF_Index_Flag),          intent(in),  optional :: indexflag
     character(len=*),               intent(in),  optional :: name
     character(len=*),               intent(in),  optional :: tileFilePath
     integer,                        intent(out), optional :: rc
```

DESCRIPTION:

Create a multiple-tile `ESMF_Grid` based on the definition from a GRIDSPEC Mosaic file and its associated tile files using irregular decomposition. Each tile can have different decomposition. The tile connections are defined in a GRIDSPEC format Mosaic file. And each tile's coordination is defined in a separate NetCDF file. The coordinates defined in the tile file is so-called "Super Grid". In other words, the dimensions of the coordinate variables are `(2*xdim+1, 2*ydim+1)` if `(xdim, ydim)` is the size of the tile. The Super Grid combines the corner, the edge and the center coordinates in one big array. A Mosaic file may contain just one tile. If a Mosaic contains multiple tiles. Each tile is a logically rectangular lat/lon grid. Currently, all the tiles have to be the same size. We will remove this limitation in the future release.

The arguments are:

filename The name of the GRIDSPEC Mosaic file.

countsPerDEDim1PTile This array specifies the number of cells per DE for index dimension 1 for the center stagger location. The second index steps through the tiles. If each tile is decomposed into different number of DEs, the first dimension is the maximal DEs of all the tiles.

countsPerDEDim2PTile This array specifies the number of cells per DE for index dimension 2 for the center stagger location. The second index steps through the tiles. If each tile is decomposed into different number of DEs, the first dimension is the maximal DEs of all the tiles.

[coordTypeKind] The type/kind of the grid coordinate data. Only ESMF_TYPEKIND_R4 and ESMF_TYPEKIND_R8 are supported. If not specified then defaults to ESMF_TYPEKIND_R8.

[deLabelList] List assigning DE labels to the default sequence of DEs. The default sequence is given by the column major order in the sequence as they appear in `countsPerDEDim1PTile`, followed by `countsPerDEDim2PTile`, then the tile index.

[staggerLocList] The list of stagger locations to fill with coordinates. Please see Section 32.2.6 for a description of the available stagger locations. If not present, no coordinates will be added or filled.

[delayout] Optional ESMF_DELayout object to be used. If a delayout object is specified, the number of DEs must match with the total DEs defined in `countsPerDEDim1PTile` and `countsPerDEDim2PTile`.

[indexflag] Indicates the indexing scheme to be used in the new Grid. Please see Section 55.29 for the list of options. If not present, defaults to ESMF_INDEX_DELOCAL.

[name] `ESMF_Grid` name.

[tileFilePath] Optional argument to define the path where the tile files reside. If it is given, it overwrites the path defined in `gridlocation` variable in the mosaic file.

[rc] Return code; equals `ESMF_SUCCESS` if there are no errors.

32.6.31 ESMF_GridDestroy - Release resources associated with a Grid

INTERFACE:

```
subroutine ESMF_GridDestroy(grid, noGarbage, rc)
```

ARGUMENTS:

```
      type(ESMF_Grid), intent(inout)         :: grid
 -- The following arguments require argument keyword syntax (e.g. rc=rc). --
      logical,         intent(in),  optional :: noGarbage
      integer,         intent(out), optional :: rc
```

STATUS:

- This interface is backward compatible with ESMF versions starting at 5.2.0r. If code using this interface compiles with any version of ESMF starting with 5.2.0r, then it will compile with the current version.
- This interface was modified since ESMF version 5.2.0r. The fact that code using this interface compiles with the current ESMF version does not guarantee that it compiles with previous versions of this interface. If user code compatibility with version 5.2.0r is desired then care must be taken to limit the use of this interface to features that were available in the 5.2.0r release.
  Changes made after the 5.2.0r release:

  7.0.0 Added argument `noGarbage`. The argument provides a mechanism to override the default garbage collection mechanism when destroying an ESMF object.

DESCRIPTION:

Destroys an `ESMF_Grid` object and related internal structures. This call does destroy internally created DistGrid and DELayout classes, for example those created by `ESMF_GridCreateShapeTile()`. It also destroys internally created coordinate/item Arrays, for example those created by `ESMF_GridAddCoord()`. However, if the user uses an externally created class, for example creating an Array and setting it using `ESMF_GridSetCoord()`, then that class is not destroyed by this method.

By default a small remnant of the object is kept in memory in order to prevent problems with dangling aliases. The default garbage collection mechanism can be overridden with the `noGarbage` argument.

The arguments are:

grid `ESMF_Grid` to be destroyed.

[noGarbage] If set to `.TRUE.` the object will be fully destroyed and removed from the ESMF garbage collection system. Note however that under this condition ESMF cannot protect against accessing the destroyed object through dangling aliases – a situation which may lead to hard to debug application crashes.

It is generally recommended to leave the `noGarbage` argument set to `.FALSE.` (the default), and to take advantage of the ESMF garbage collection system which will prevent problems with dangling aliases or incorrect sequences of destroy calls. However this level of support requires that a small remnant of the object is kept in memory past the destroy call. This can lead to an unexpected increase in memory consumption over the course of execution in applications that use temporary ESMF objects. For situations where the repeated creation and destruction of temporary objects leads to memory issues, it is recommended to call with `noGarbage` set to `.TRUE.`, fully removing the entire temporary object from memory.

[rc] Return code; equals `ESMF_SUCCESS` if there are no errors.

32.6.32 ESMF_GridEmptyComplete - Complete a Grid with user set edge connections and an irregular distribution

INTERFACE:

```
! Private name; call using ESMF_GridEmptyComplete()
    subroutine ESMF_GridEmptyCompleteEConnI(grid, minIndex,         &
      countsPerDEDim1,countsPerDeDim2,                  &
      countsPerDEDim3,                                  &
      connDim1, connDim2, connDim3,                     &
      coordSys, coordTypeKind,                          &
      coordDep1, coordDep2, coordDep3,                  &
      gridEdgeLWidth, gridEdgeUWidth, gridAlign,        &
      gridMemLBound, indexflag, petMap, name, rc)
```

ARGUMENTS:

```
type (ESMF_Grid)                                  :: grid
integer,                  intent(in),  optional :: minIndex(:)
integer,                  intent(in)            :: countsPerDEDim1(:)
```

```
        integer,                  intent(in)            :: countsPerDEDim2(:)
 -- The following arguments require argument keyword syntax (e.g. rc=rc). --
        integer,                  intent(in),  optional :: countsPerDEDim3(:)
        type(ESMF_GridConn_Flag), intent(in),  optional :: connDim1(:)
        type(ESMF_GridConn_Flag), intent(in),  optional :: connDim2(:)
        type(ESMF_GridConn_Flag), intent(in),  optional :: connDim3(:)
        type(ESMF_CoordSys_Flag), intent(in),  optional :: coordSys
        type(ESMF_TypeKind_Flag), intent(in),  optional :: coordTypeKind
        integer,                  intent(in),  optional :: coordDep1(:)
        integer,                  intent(in),  optional :: coordDep2(:)
        integer,                  intent(in),  optional :: coordDep3(:)
        integer,                  intent(in),  optional :: gridEdgeLWidth(:)
        integer,                  intent(in),  optional :: gridEdgeUWidth(:)
        integer,                  intent(in),  optional :: gridAlign(:)
        integer,                  intent(in),  optional :: gridMemLBound(:)
        type(ESMF_Index_Flag),    intent(in),  optional :: indexflag
        integer,                  intent(in),  optional :: petMap(:,:,:)
        character (len=*),        intent(in),  optional :: name
        integer,                  intent(out), optional :: rc
```

DESCRIPTION:

This method takes in an empty Grid created by `ESMF_GridEmptyCreate()`. It then completes the grid to form a single tile, irregularly distributed grid (see Figure 13). To specify the irregular distribution, the user passes in an array for each grid dimension, where the length of the array is the number of DEs in the dimension. Currently this call only supports creating 2D or 3D Grids. A 2D Grid can be specified using the countsPerDEDim1 and countsPerDEDim2 arguments. A 3D Grid can be specified by also using the optional countsPerDEDim3 argument. The index of each array element in these arguments corresponds to a DE number. The array value at the index is the number of grid cells on the DE in that dimension.

Section 32.3.4 shows an example of using an irregular distribution to create a 2D Grid with uniformly spaced coordinates. This creation method can also be used as the basis for grids with rectilinear coordinates or curvilinear coordinates.

For consistency's sake the `ESMF_GridEmptyComplete()` call should be executed in the same set or a subset of the PETs in which the `ESMF_GridEmptyCreate()` call was made. If the call is made in a subset, the Grid objects outside that subset will still be "empty" and not usable.

The arguments are:

grid The empty `ESMF_Grid` to set information into and then commit.

[minIndex] Tuple to start the index ranges at. If not present, defaults to /1,1,1,.../.

countsPerDEDim1 This arrays specifies the number of cells per DE for index dimension 1 for the exclusive region (the center stagger location).

countsPerDEDim2 This array specifies the number of cells per DE for index dimension 2 for the exclusive region (center stagger location).

[countsPerDEDim3] This array specifies the number of cells per DE for index dimension 3 for the exclusive region (center stagger location). If not specified then grid is 2D.

[connDim1] Fortran array describing the index dimension 1 connections. The first element represents the minimum end of dimension 1. The second element represents the maximum end of dimension 1. If array is only one element long, then that element is used for both the minimum and maximum end. Please see Section 32.2.1 for a list of valid options. If not present, defaults to ESMF_GRIDCONN_NONE.

[connDim2] Fortran array describing the index dimension 2 connections. The first element represents the minimum end of dimension 2. The second element represents the maximum end of dimension 2. If array is only one element long, then that element is used for both the minimum and maximum end. Please see Section 32.2.1 for a list of valid options. If not present, defaults to ESMF_GRIDCONN_NONE.

[connDim3] Fortran array describing the index dimension 3 connections. The first element represents the minimum end of dimension 3. The second element represents the maximum end of dimension 3. If array is only one element long, then that element is used for both the minimum and maximum end. Please see Section 32.2.1 for a list of valid options. If not present, defaults to ESMF_GRIDCONN_NONE.

[coordSys] The coordinate system of the grid coordinate data. For a full list of options, please see Section 55.11. If not specified then defaults to ESMF_COORDSYS_SPH_DEG.

[coordTypeKind] The type/kind of the grid coordinate data. All *numerical* types listed under section 55.61 are supported. If not specified then defaults to ESMF_TYPEKIND_R8.

[coordDep1] This array specifies the dependence of the first coordinate component on the three index dimensions described by `coordsPerDEDim1,2,3`. The size of the array specifies the number of dimensions of the first coordinate component array. The values specify which of the index dimensions the corresponding coordinate arrays map to. If not present the default is 1,2,...,grid rank.

[coordDep2] This array specifies the dependence of the second coordinate component on the three index dimensions described by `coordsPerDEDim1,2,3`. The size of the array specifies the number of dimensions of the second coordinate component array. The values specify which of the index dimensions the corresponding coordinate arrays map to. If not present the default is 1,2,...,grid rank.

[coordDep3] This array specifies the dependence of the third coordinate component on the three index dimensions described by `coordsPerDEDim1,2,3`. The size of the array specifies the number of dimensions of the third coordinate component array. The values specify which of the index dimensions the corresponding coordinate arrays map to. If not present the default is 1,2,...,grid rank.

[gridEdgeLWidth] The padding around the lower edges of the grid. This padding is between the index space corresponding to the cells and the boundary of the the exclusive region. This extra space is to contain the extra padding for non-center stagger locations, and should be big enough to hold any stagger in the grid. If this and gridAlign are not present then defaults to 0, 0, ..., 0 (all zeros).

[gridEdgeUWidth] The padding around the upper edges of the grid. This padding is between the index space corresponding to the cells and the boundary of the the exclusive region. This extra space is to contain the extra padding for non-center stagger locations, and should be big enough to hold any stagger in the grid. If this and gridAlign are not present then defaults to 1, 1, ..., 1 (all ones).

[gridAlign] Specification of how the stagger locations should align with the cell index space (can be overridden by the individual staggerAligns). If the gridEdgeWidths are not specified than this argument implies the gridEdgeWidths. If the gridEdgeWidths are specified and this argument isn't then this argument is implied by the gridEdgeWidths. If this and the gridEdgeWidths are not specified, then defaults to -1, -1, ..., -1 (all negative ones).

[gridMemLBound] Specifies the lower index range of the memory of every DE in this Grid. Only used when indexflag is `ESMF_INDEX_USER`. May be overridden by staggerMemLBound.

[indexflag] Indicates the indexing scheme to be used in the new Grid. Please see Section 55.29 for the list of options. If not present, defaults to ESMF_INDEX_DELOCAL.

[petMap] Sets the mapping of pets to the created DEs. This 3D should be of size size(countsPerDEDim1) x size(countsPerDEDim2) x size(countsPerDEDim3). If countsPerDEDim3 isn't present, then the last dimension is of size 1.

[name] `ESMF_Grid` name.

[rc] Return code; equals `ESMF_SUCCESS` if there are no errors.

32.6.33 ESMF_GridEmptyComplete - Complete a Grid with user set edge connections and a regular distribution

INTERFACE:

```
! Private name; call using ESMF_GridEmptyComplete()
   subroutine ESMF_GridEmptyCompleteEConnR(grid, regDecomp, decompFlag, &
      minIndex, maxIndex,                                                &
      connDim1, connDim2, connDim3,                                     &
      coordSys, coordTypeKind,                                          &
      coordDep1, coordDep2, coordDep3,                                  &
      gridEdgeLWidth, gridEdgeUWidth, gridAlign,                        &
      gridMemLBound, indexflag, petMap, name, rc)

!
```

ARGUMENTS:

```
       type (ESMF_Grid)                                :: grid
       integer,                  intent(in),  optional :: regDecomp(:)
       type(ESMF_Decomp_Flag),   intent(in),  optional :: decompflag(:)
       integer,                  intent(in),  optional :: minIndex(:)
       integer,                  intent(in)            :: maxIndex(:)
-- The following arguments require argument keyword syntax (e.g. rc=rc). --
       type(ESMF_GridConn_Flag), intent(in),  optional :: connDim1(:)
       type(ESMF_GridConn_Flag), intent(in),  optional :: connDim2(:)
       type(ESMF_GridConn_Flag), intent(in),  optional :: connDim3(:)
       type(ESMF_CoordSys_Flag), intent(in),  optional :: coordSys
       type(ESMF_TypeKind_Flag), intent(in),  optional :: coordTypeKind
       integer,                  intent(in),  optional :: coordDep1(:)
       integer,                  intent(in),  optional :: coordDep2(:)
       integer,                  intent(in),  optional :: coordDep3(:)
       integer,                  intent(in),  optional :: gridEdgeLWidth(:)
       integer,                  intent(in),  optional :: gridEdgeUWidth(:)
       integer,                  intent(in),  optional :: gridAlign(:)
       integer,                  intent(in),  optional :: gridMemLBound(:)
       type(ESMF_Index_Flag),    intent(in),  optional :: indexflag
       integer,                  intent(in),  optional :: petMap(:,:,:)
       character (len=*),        intent(in),  optional :: name
       integer,                  intent(out), optional :: rc
```

DESCRIPTION:

This method takes in an empty Grid created by `ESMF_GridEmptyCreate()`. It then completes the grid to form a single tile, regularly distributed grid (see Figure 13). To specify the distribution, the user passes in an array (`regDecomp`) specifying the number of DEs to divide each dimension into. The array `decompFlag` indicates how the division into DEs is to occur. The default is to divide the range as evenly as possible. Currently this call only supports creating a 2D or 3D Grid, and thus, for example, `maxIndex` must be of size 2 or 3.

For consistency's sake the `ESMF_GridEmptyComplete()` call should be executed in the same set or a subset of the PETs in which the `ESMF_GridEmptyCreate()` call was made. If the call is made in a subset, the Grid objects outside that subset will still be "empty" and not usable.

The arguments are:

grid The empty `ESMF_Grid` to set information into and then commit.

[regDecomp] List that has the same number of elements as `maxIndex`. Each entry is the number of decounts for that dimension. If not specified, the default decomposition will be petCountx1x1..x1.

[decompflag] List of decomposition flags indicating how each dimension of the tile is to be divided between the DEs. The default setting is `ESMF_DECOMP_BALANCED` in all dimensions. Please see Section 55.14 for a full description of the possible options. Note that currently the option `ESMF_DECOMP_CYCLIC` isn't supported in Grid creation.

[minIndex] The bottom extent of the grid array. If not given then the value defaults to /1,1,1,.../.

maxIndex The upper extent of the grid array.

[connDim1] Fortran array describing the index dimension 1 connections. The first element represents the minimum end of dimension 1. The second element represents the maximum end of dimension 1. If array is only one element long, then that element is used for both the minimum and maximum end. Please see Section 32.2.1 for a list of valid options. If not present, defaults to ESMF_GRIDCONN_NONE.

[connDim2] Fortran array describing the index dimension 2 connections. The first element represents the minimum end of dimension 2. The second element represents the maximum end of dimension 2. If array is only one element long, then that element is used for both the minimum and maximum end. Please see Section 32.2.1 for a list of valid options. If not present, defaults to ESMF_GRIDCONN_NONE.

[connDim3] Fortran array describing the index dimension 3 connections. The first element represents the minimum end of dimension 3. The second element represents the maximum end of dimension 3. If array is only one element long, then that element is used for both the minimum and maximum end. Please see Section 32.2.1 for a list of valid options. If not present, defaults to ESMF_GRIDCONN_NONE.

[coordSys] The coordinate system of the grid coordinate data. For a full list of options, please see Section 55.11. If not specified then defaults to ESMF_COORDSYS_SPH_DEG.

[coordTypeKind] The type/kind of the grid coordinate data. All *numerical* types listed under section 55.61 are supported. If not specified then defaults to ESMF_TYPEKIND_R8.

[coordDep1] This array specifies the dependence of the first coordinate component on the three index dimensions described by `coordsPerDEDim1,2,3`. The size of the array specifies the number of dimensions of the first coordinate component array. The values specify which of the index dimensions the corresponding coordinate arrays map to. If not present the default is 1,2,...,grid rank.

[coordDep2] This array specifies the dependence of the second coordinate component on the three index dimensions described by `coordsPerDEDim1,2,3`. The size of the array specifies the number of dimensions of the second coordinate component array. The values specify which of the index dimensions the corresponding coordinate arrays map to. If not present the default is 1,2,...,grid rank.

[coordDep3] This array specifies the dependence of the third coordinate component on the three index dimensions described by `coordsPerDEDim1,2,3`. The size of the array specifies the number of dimensions of the third coordinate component array. The values specify which of the index dimensions the corresponding coordinate arrays map to. If not present the default is 1,2,...,grid rank.

[gridEdgeLWidth] The padding around the lower edges of the grid. This padding is between the index space corresponding to the cells and the boundary of the the exclusive region. This extra space is to contain the extra padding for non-center stagger locations, and should be big enough to hold any stagger in the grid. If this and gridAlign are not present then defaults to 0, 0, ..., 0 (all zeros).

[gridEdgeUWidth] The padding around the upper edges of the grid. This padding is between the index space corresponding to the cells and the boundary of the the exclusive region. This extra space is to contain the extra padding for non-center stagger locations, and should be big enough to hold any stagger in the grid. If this and gridAlign are not present then defaults to 1, 1, ..., 1 (all ones).

[gridAlign] Specification of how the stagger locations should align with the cell index space (can be overridden by the individual staggerAligns). If the gridEdgeWidths are not specified than this argument implies the gridEdgeWidths. If the gridEdgeWidths are specified and this argument isn't then this argument is implied by the gridEdgeWidths. If this and the gridEdgeWidths are not specified, then defaults to -1, -1, ..., -1 (all negative ones).

[gridMemLBound] Specifies the lower index range of the memory of every DE in this Grid. Only used when indexflag is `ESMF_INDEX_USER`. May be overridden by staggerMemLBound.

[indexflag] Indicates the indexing scheme to be used in the new Grid. Please see Section 55.29 for the list of options. If not present, defaults to ESMF_INDEX_DELOCAL.

[petMap] Sets the mapping of pets to the created DEs. This 3D should be of size regDecomp(1) x regDecomp(2) x regDecomp(3) If the Grid is 2D, then the last dimension is of size 1.

[name] `ESMF_Grid` name.

[rc] Return code; equals `ESMF_SUCCESS` if there are no errors.

32.6.34 ESMF_GridEmptyComplete - Complete a Grid with user set edge connections and an arbitrary distribution

INTERFACE:

```
  ! Private name; call using ESMF_GridEmptyComplete()
      subroutine ESMF_GridEmptyCompleteEConnA(grid, minIndex, maxIndex,  &
        arbIndexCount, arbIndexList,                                     &
        connDim1, connDim2, connDim3,                                    &
        coordSys, coordTypeKind,                                         &
        coordDep1, coordDep2, coordDep3,                                 &
        distDim, name, rc)
 !
```

ARGUMENTS:

```
        type (ESMF_Grid)                                  :: grid
        integer,                  intent(in),  optional :: minIndex(:)
        integer,                  intent(in)            :: maxIndex(:)
        integer,                  intent(in)            :: arbIndexCount
        integer,                  intent(in)            :: arbIndexList(:,:)
 -- The following arguments require argument keyword syntax (e.g. rc=rc). --
        type(ESMF_GridConn_Flag), intent(in),  optional :: connDim1(:)
        type(ESMF_GridConn_Flag), intent(in),  optional :: connDim2(:)
        type(ESMF_GridConn_Flag), intent(in),  optional :: connDim3(:)
        type(ESMF_CoordSys_Flag), intent(in),  optional :: coordSys
        type(ESMF_TypeKind_Flag), intent(in),  optional :: coordTypeKind
        integer,                  intent(in),  optional :: coordDep1(:)
        integer,                  intent(in),  optional :: coordDep2(:)
        integer,                  intent(in),  optional :: coordDep3(:)
        integer,                  intent(in),  optional :: distDim(:)
        character (len=*),        intent(in),  optional :: name
        integer,                  intent(out), optional :: rc
```

DESCRIPTION:

This method takes in an empty Grid created by `ESMF_GridEmptyCreate()`. It then completes the grid to form a single tile, arbitrarily distributed grid (see Figure 13). To specify the arbitrary distribution, the user passes in an 2D array of local indices, where the first dimension is the number of local grid cells specified by `localArbIndexCount` and the second dimension is the number of distributed dimensions.

`distDim` specifies which grid dimensions are arbitrarily distributed. The size of `distDim` has to agree with the size of the second dimension of `localArbIndex`.

Currently this call only supports creating a 2D or 3D Grid, and thus, for example, `maxIndex` must be of size 2 or 3.

For consistency's sake the `ESMF_GridEmptyComplete()` call should be executed in the same set or a subset of the PETs in which the `ESMF_GridEmptyCreate()` call was made. If the call is made in a subset, the Grid objects outside that subset will still be "empty" and not usable.

The arguments are:

grid The empty `ESMF_Grid` to set information into and then commit.

[minIndex] Tuple to start the index ranges at. If not present, defaults to /1,1,1,.../.

maxIndex The upper extend of the grid index ranges.

arbIndexCount The number of grid cells in the local DE. It is okay to have 0 grid cell in a local DE.

arbIndexList This 2D array specifies the indices of the PET LOCAL grid cells. The dimensions should be arbIndexCount * number of Distributed grid dimensions where arbIndexCount is the input argument specified below

[connDim1] Fortran array describing the index dimension 1 connections. The first element represents the minimum end of dimension 1. The second element represents the maximum end of dimension 1. If array is only one element long, then that element is used for both the minimum and maximum end. Please see Section 32.2.1 for a list of valid options. If not present, defaults to ESMF_GRIDCONN_NONE.

[connDim2] Fortran array describing the index dimension 2 connections. The first element represents the minimum end of dimension 2. The second element represents the maximum end of dimension 2. If array is only one element long, then that element is used for both the minimum and maximum end. Please see Section 32.2.1 for a list of valid options. If not present, defaults to ESMF_GRIDCONN_NONE.

[connDim3] Fortran array describing the index dimension 3 connections. The first element represents the minimum end of dimension 3. The second element represents the maximum end of dimension 3. If array is only one element long, then that element is used for both the minimum and maximum end. Please see Section 32.2.1 for a list of valid options. If not present, defaults to ESMF_GRIDCONN_NONE.

[coordSys] The coordinate system of the grid coordinate data. For a full list of options, please see Section 55.11. If not specified then defaults to ESMF_COORDSYS_SPH_DEG.

[coordTypeKind] The type/kind of the grid coordinate data. All *numerical* types listed under section 55.61 are supported. If not specified then defaults to ESMF_TYPEKIND_R8.

[coordDep1] The size of the array specifies the number of dimensions of the first coordinate component array. The values specify which of the index dimensions the corresponding coordinate arrays map to. The format should be /ESMF_GRID_ARBDIM/ where /ESMF_GRID_ARBDIM/ is mapped to the collapsed 1D dimension from all the arbitrarily distributed dimensions. n is the dimension that is not distributed (if exists). If not present the default is /ESMF_GRID_ARBDIM/ if the first dimension is arbitararily distributed, or /n/ if not distributed (i.e. n=1) Please see Section 55.2 for a definition of ESMF_GRID_ARBDIM.

[coordDep2] The size of the array specifies the number of dimensions of the second coordinate component array. The values specify which of the index dimensions the corresponding coordinate arrays map to. The format should

be /ESMF_GRID_ARBDIM/ where /ESMF_GRID_ARBDIM/ is mapped to the collapsed 1D dimension from all the arbitrarily distributed dimensions. n is the dimension that is not distributed (if exists). If not present the default is /ESMF_GRID_ARBDIM/ if this dimension is arbitararily distributed, or /n/ if not distributed (i.e. n=2) Please see Section 55.2 for a definition of ESMF_GRID_ARBDIM.

[coordDep3] The size of the array specifies the number of dimensions of the third coordinate component array. The values specify which of the index dimensions the corresponding coordinate arrays map to. The format should be /ESMF_GRID_ARBDIM/ where /ESMF_GRID_ARBDIM/ is mapped to the collapsed 1D dimension from all the arbitrarily distributed dimensions. n is the dimension that is not distributed (if exists). If not present the default is /ESMF_GRID_ARBDIM/ if this dimension is arbitararily distributed, or /n/ if not distributed (i.e. n=3) Please see Section 55.2 for a definition of ESMF_GRID_ARBDIM.

[distDim] This array specifies which dimensions are arbitrarily distributed. The size of the array specifies the total distributed dimensions. if not specified, defaults is all dimensions will be arbitrarily distributed. The size has to agree with the size of the second dimension of `localArbIndex`.

[name] `ESMF_Grid` name.

[rc] Return code; equals `ESMF_SUCCESS` if there are no errors.

32.6.35 ESMF_GridEmptyCreate - Create a Grid that has no contents

INTERFACE:

```
function ESMF_GridEmptyCreate(vm, rc)
```

RETURN VALUE:

```
type(ESMF_Grid) :: ESMF_GridEmptyCreate
```

ARGUMENTS:

```
-- The following arguments require argument keyword syntax (e.g. rc=rc). --
    type(ESMF_VM),           intent(in),  optional :: vm
    integer,                 intent(out), optional :: rc
```

STATUS:

- This interface is backward compatible with ESMF versions starting at 5.2.0r. If code using this interface compiles with any version of ESMF starting with 5.2.0r, then it will compile with the current version.
- This interface was modified since ESMF version 5.2.0r. The fact that code using this interface compiles with the current ESMF version does not guarantee that it compiles with previous versions of this interface. If user code compatibility with version 5.2.0r is desired then care must be taken to limit the use of this interface to features that were available in the 5.2.0r release.
  Changes made after the 5.2.0r release:

  7.1.0r Added argument `vm` to support object creation on a different VM than that of the current context.

DESCRIPTION:

Partially create an `ESMF_Grid` object. This function allocates an `ESMF_Grid` object, but doesn't allocate any coordinate storage or other internal structures. The `ESMF_GridEmptyComplete()` calls can be used to set the values in the grid object and to construct the internal structure.

The arguments are:

[vm] If present, the Grid object is created on the specified `ESMF_VM` object. The default is to create on the VM of the current context.

[rc] Return code; equals `ESMF_SUCCESS` if there are no errors.

32.6.36 ESMF_GridGet - Get object-wide Grid information

INTERFACE:

```
! Private name; call using ESMF_GridGet()
    subroutine ESMF_GridGetDefault(grid, coordTypeKind, &
      dimCount, tileCount, staggerlocCount, localDECount, distgrid, &
      distgridToGridMap, coordSys, coordDimCount, coordDimMap, arbDim, &
      rank, arbDimCount, gridEdgeLWidth, gridEdgeUWidth, gridAlign,  &
      indexFlag, status, name, rc)
```

ARGUMENTS:

```
    type(ESMF_Grid),            intent(in)            :: grid
-- The following arguments require argument keyword syntax (e.g. rc=rc). --
    type(ESMF_TypeKind_Flag),  intent(out), optional :: coordTypeKind
    integer,                   intent(out), optional :: dimCount
    integer,                   intent(out), optional :: tileCount
    integer,                   intent(out), optional :: staggerlocCount
    integer,                   intent(out), optional :: localDECount
    type(ESMF_DistGrid),       intent(out), optional :: distgrid
    integer,       target,     intent(out), optional :: distgridToGridMap(:)
    type(ESMF_CoordSys_Flag),  intent(out), optional :: coordSys
    integer,       target,     intent(out), optional :: coordDimCount(:)
    integer,       target,     intent(out), optional :: coordDimMap(:,:)
    integer,                   intent(out), optional :: arbDim
    integer,                   intent(out), optional :: rank
    integer,                   intent(out), optional :: arbDimCount
    integer,       target,     intent(out), optional :: gridEdgeLWidth(:)
    integer,       target,     intent(out), optional :: gridEdgeUWidth(:)
    integer,       target,     intent(out), optional :: gridAlign(:)
    type(ESMF_Index_Flag),     intent(out), optional :: indexflag
    type(ESMF_GridStatus_Flag),intent(out), optional :: status
    character (len=*),         intent(out), optional :: name
    integer,                   intent(out), optional :: rc
```

STATUS:

- This interface is backward compatible with ESMF versions starting at 5.2.0r. If code using this interface compiles with any version of ESMF starting with 5.2.0r, then it will compile with the current version.

DESCRIPTION:

Gets various types of information about a grid.

The arguments are:

grid Grid to get the information from.

[coordTypeKind] The type/kind of the grid coordinate data. All *numerical* types listed under section 55.61 are supported.

[dimCount] DimCount of the Grid object.

[tileCount] The number of logically rectangular tiles in the grid.

[staggerlocCount] The number of stagger locations.

[localDECount] The number of DEs in this grid on this PET.

[distgrid] The structure describing the distribution of the grid.

[distgridToGridMap] List that has as many elements as the distgrid dimCount. This array describes mapping between the grids dimensions and the distgrid.

[coordSys] The coordinate system of the grid coordinate data.

[coordDimCount] This argument needs to be of size equal to the Grid's dimCount. Each entry in the argument will be filled with the dimCount of the corresponding coordinate component (e.g. the dimCount of coordDim=1 will be put into entry 1). This is useful because it describes the factorization of the coordinate components in the Grid.

[coordDimMap] 2D list of size grid dimCount x grid dimCount. This array describes the map of each component array's dimensions onto the grids dimensions.

[arbDim] The distgrid dimension that is mapped by the arbitrarily distributed grid dimensions.

[rank] The count of the memory dimensions, it is the same as dimCount for a non-arbitrarily distributed grid, and equal or less for a arbitrarily distributed grid.

[arbDimCount] The number of dimensions distributed arbitrarily for an arbitrary grid, 0 if the grid is non-arbitrary.

[gridEdgeLWidth] The padding around the lower edges of the grid. The array should be of size greater or equal to the Grid dimCount.

[gridEdgeUWidth] The padding around the upper edges of the grid. The array should be of size greater or equal to the Grid dimCount.

[gridAlign] Specification of how the stagger locations should align with the cell index space. The array should be of size greater or equal to the Grid dimCount.

[indexflag] Flag indicating the indexing scheme being used in the Grid. Please see Section 55.29 for the list of options.

[status] Flag indicating the status of the Grid. Please see Section 32.2.4 for the list of options.

[name] `ESMF_Grid` name.

[rc] Return code; equals `ESMF_SUCCESS` if there are no errors.

32.6.37 ESMF_GridGet - Get DE-local Grid information

INTERFACE:

```
! Private name; call using ESMF_GridGet()
    subroutine ESMF_GridGetPLocalDe(grid, localDE, &
      isLBound,isUBound, arbIndexCount, arbIndexList, tile, rc)
```

ARGUMENTS:

```
    type(ESMF_Grid),        intent(in)            :: grid
    integer,                intent(in)            :: localDE
-- The following arguments require argument keyword syntax (e.g. rc=rc). --
    logical,                intent(out), optional :: isLBound(:)
    logical,                intent(out), optional :: isUBound(:)
    integer,                intent(out), optional :: arbIndexCount
    integer,        target, intent(out), optional :: arbIndexList(:,:)
    integer,                intent(out), optional :: tile
    integer,                intent(out), optional :: rc
```

STATUS:

- This interface is backward compatible with ESMF versions starting at 5.2.0r. If code using this interface compiles with any version of ESMF starting with 5.2.0r, then it will compile with the current version.
- This interface was modified since ESMF version 5.2.0r. The fact that code using this interface compiles with the current ESMF version does not guarantee that it compiles with previous versions of this interface. If user code compatibility with version 5.2.0r is desired then care must be taken to limit the use of this interface to features that were available in the 5.2.0r release.
  Changes made after the 5.2.0r release:

  7.1.0r Added argument `tile`. This new argument allows the user to query the tile within which the localDE is contained.

DESCRIPTION:

This call gets information about a particular local DE in a Grid.

The arguments are:

grid Grid to get the information from.

localDE The local DE from which to get the information. `[0,..,localDECount-1]`

[isLBound] Upon return, for each dimension this indicates if the DE is a lower bound of the Grid. `isLBound` must be allocated to be of size equal to the Grid dimCount.

[isUBound] Upon return, for each dimension this indicates if the DE is an upper bound of the Grid. `isUBound` must be allocated to be of size equal to the Grid dimCount.

[arbIndexCount] The number of local cells for an arbitrarily distributed grid

[arbIndexList] The 2D array storing the local cell indices for an arbitrarily distributed grid. The size of the array is arbIndexCount * arbDimCount

[tile] The number of the tile in which localDE is contained. Tile numbers range from 1 to TileCount.

[rc] Return code; equals `ESMF_SUCCESS` if there are no errors.

32.6.38 ESMF_GridGet - Get DE-local information for a specific stagger location in a Grid

INTERFACE:

```
! Private name; call using ESMF_GridGet()
    subroutine ESMF_GridGetPLocalDePSloc(grid, staggerloc, localDE, &
      exclusiveLBound, exclusiveUBound, exclusiveCount,  &
      computationalLBound, computationalUBound, computationalCount, rc)
```

ARGUMENTS:

```
      type(ESMF_Grid),        intent(in)            :: grid
      type (ESMF_StaggerLoc), intent(in)            :: staggerloc
      integer,                intent(in)            :: localDE
-- The following arguments require argument keyword syntax (e.g. rc=rc). --
      integer,        target, intent(out), optional :: exclusiveLBound(:)
      integer,        target, intent(out), optional :: exclusiveUBound(:)
      integer,        target, intent(out), optional :: exclusiveCount(:)
      integer,        target, intent(out), optional :: computationalLBound(:)
      integer,        target, intent(out), optional :: computationalUBound(:)
      integer,        target, intent(out), optional :: computationalCount(:)
      integer,                intent(out), optional :: rc
```

STATUS:

- This interface is backward compatible with ESMF versions starting at 5.2.0r. If code using this interface compiles with any version of ESMF starting with 5.2.0r, then it will compile with the current version.

DESCRIPTION:

This method gets information about the range of index space which a particular stagger location occupies. This call differs from the coordinate bound calls (e.g. `ESMF_GridGetCoord`) in that a given coordinate array may only occupy a subset of the Grid's dimensions, and so these calls may not give all the bounds of the stagger location. The bounds from this call are the full bounds, and so for example, give the appropriate bounds for allocating a Fortran array to hold data residing on the stagger location. Note that unlike the output from the Array, these values also include the undistributed dimensions and are ordered to reflect the order of the indices in the Grid. This call will still give correct values even if the stagger location does not contain coordinate arrays (e.g. if `ESMF_GridAddCoord` hasn't yet been called on the stagger location).

The arguments are:

grid Grid to get the information from.

staggerloc The stagger location to get the information for. Please see Section 32.2.6 for a list of predefined stagger locations.

localDE The local DE from which to get the information. `[0,..,localDECount-1]`

[exclusiveLBound] Upon return this holds the lower bounds of the exclusive region. `exclusiveLBound` must be allocated to be of size equal to the Grid dimCount. Please see Section 32.3.19 for a description of the regions and their associated bounds and counts.

[exclusiveUBound] Upon return this holds the upper bounds of the exclusive region. `exclusiveUBound` must be allocated to be of size equal to the Grid dimCount. Please see Section 32.3.19 for a description of the regions and their associated bounds and counts.

[exclusiveCount] Upon return this holds the number of items,`exclusiveUBound-exclusiveLBound+1`, in the exclusive region per dimension. `exclusiveCount` must be allocated to be of size equal to the Grid dimCount. Please see Section 32.3.19 for a description of the regions and their associated bounds and counts.

[computationalLBound] Upon return this holds the lower bounds of the computational region. `computationalLBound` must be allocated to be of size equal to the Grid dimCount. Please see Section 32.3.19 for a description of the regions and their associated bounds and counts.

[computationalUBound] Upon return this holds the upper bounds of the computational region. `computationalUBound` must be allocated to be of size equal to the Grid dimCount. Please see Section 32.3.19 for a description of the regions and their associated bounds and counts.

[computationalCount] Upon return this holds the number of items in the computational region per dimension. (i.e. `computationalUBound-computationalLBound+1`). `computationalCount` must be allocated to be of size equal to the Grid dimCount. Please see Section 32.3.19 for a description of the regions and their associated bounds and counts.

[rc] Return code; equals `ESMF_SUCCESS` if there are no errors.

32.6.39 ESMF_GridGet - Get information about a specific stagger location in a Grid

INTERFACE:

```
! Private name; call using ESMF_GridGet()
    subroutine ESMF_GridGetPSloc(grid, staggerloc, &
      distgrid, &
      staggerEdgeLWidth, staggerEdgeUWidth, &
      staggerAlign, staggerLBound, rc)
```

ARGUMENTS:

```
    type(ESMF_Grid),        intent(in)            :: grid
    type (ESMF_StaggerLoc), intent(in)            :: staggerloc
-- The following arguments require argument keyword syntax (e.g. rc=rc). --
    type(ESMF_DistGrid),    intent(out), optional :: distgrid
    integer,                intent(out), optional :: staggerEdgeLWidth(:)
    integer,                intent(out), optional :: staggerEdgeUWidth(:)
    integer,                intent(out), optional :: staggerAlign(:)
    integer,                intent(out), optional :: staggerLBound(:)
    integer,                intent(out), optional :: rc
```

STATUS:

- This interface is backward compatible with ESMF versions starting at 5.2.0r. If code using this interface compiles with any version of ESMF starting with 5.2.0r, then it will compile with the current version.
- This interface was modified since ESMF version 5.2.0r. The fact that code using this interface compiles with the current ESMF version does not guarantee that it compiles with previous versions of this interface. If user code compatibility with version 5.2.0r is desired then care must be taken to limit the use of this interface to features that were available in the 5.2.0r release.
  Changes made after the 5.2.0r release:

  7.1.0r Added arguments `staggerEdgeLWidth`, `staggerEdgeUWidth`, `staggerAlign`, and `staggerLBound`. These new arguments allow the user to get width, alignment, and bound information for the given stagger location.

DESCRIPTION:

This method gets information about a particular stagger location. This information is useful for creating an ESMF Array to hold the data at the stagger location.

The arguments are:

grid Grid to get the information from.

staggerloc The stagger location to get the information for. Please see Section 32.2.6 for a list of predefined stagger locations.

[distgrid] The structure describing the distribution of this staggerloc in this grid.

[staggerEdgeLWidth] This array should be the same dimCount as the grid. It specifies the lower corner of the stagger region with respect to the lower corner of the exclusive region.

[staggerEdgeUWidth] This array should be the same dimCount as the grid. It specifies the upper corner of the stagger region with respect to the upper corner of the exclusive region.

[staggerAlign] This array is of size grid dimCount. For this stagger location, it specifies which element has the same index value as the center. For example, for a 2D cell with corner stagger it specifies which of the 4 corners has the same index as the center.

[staggerLBound] Specifies the lower index range of the memory of every DE in this staggerloc in this Grid. Only used when Grid indexflag is `ESMF_INDEX_USER`.

[rc] Return code; equals `ESMF_SUCCESS` if there are no errors.

32.6.40 ESMF_GridGet - Get information about a specific stagger location and tile in a Grid

INTERFACE:

```
! Private name; call using ESMF_GridGet()
    subroutine ESMF_GridGetPSlocPTile(grid, tile, staggerloc, &
      minIndex, maxIndex, rc)
```

ARGUMENTS:

```
      type(ESMF_Grid),        intent(in)            :: grid
      integer,                intent(in)            :: tile
      type (ESMF_StaggerLoc), intent(in)            :: staggerloc
 -- The following arguments require argument keyword syntax (e.g. rc=rc). --
      integer,        target, intent(out), optional :: minIndex(:)
      integer,        target, intent(out), optional :: maxIndex(:)
      integer,                intent(out), optional :: rc
```

STATUS:

- This interface is backward compatible with ESMF versions starting at 5.2.0r. If code using this interface compiles with any version of ESMF starting with 5.2.0r, then it will compile with the current version.

DESCRIPTION:

This method gets information about a particular stagger location. This information is useful for creating an ESMF Array to hold the data at the stagger location.

The arguments are:

grid Grid to get the information from.

tile The tile number to get the data from. Tile numbers range from 1 to TileCount.

staggerloc The stagger location to get the information for. Please see Section 32.2.6 for a list of predefined stagger locations.

[minIndex] Upon return this holds the global lower index of this stagger location. `minIndex` must be allocated to be of size equal to the grid DimCount. Note that this value is only for the first Grid tile, as multigrid support is added, this interface will likely be changed or moved to adapt.

[maxIndex] Upon return this holds the global upper index of this stagger location. `maxIndex` must be allocated to be of size equal to the grid DimCount. Note that this value is only for the first Grid tile, as multigrid support is added, this interface will likely be changed or moved to adapt.

[rc] Return code; equals `ESMF_SUCCESS` if there are no errors.

32.6.41 ESMF_GridGetCoord - Get a DE-local Fortran array pointer to Grid coord data and coord bounds

INTERFACE:

```
subroutine ESMF_GridGetCoord<rank><type><kind>(grid, coordDim,     &
  staggerloc, localDE, farrayPtr, datacopyflag,                    &
  exclusiveLBound, exclusiveUBound, exclusiveCount,                &
  computationalLBound, computationalUBound, computationalCount,    &
  totalLBound, totalUBound, totalCount, rc)
```

ARGUMENTS:

```
      type(ESMF_Grid),       intent(in)              :: grid
      integer,               intent(in)              :: coordDim
-- The following arguments require argument keyword syntax (e.g. rc=rc). --
      type (ESMF_StaggerLoc) intent(in),    optional :: staggerloc
      integer,               intent(in),    optional :: localDE
      <type> (ESMF_KIND_<kind>), pointer              :: farrayPtr(<rank>)
      type(ESMF_DataCopy_Flag), intent(in), optional :: datacopyflag
      integer,               intent(out),   optional :: exclusiveLBound(:)
      integer,               intent(out),   optional :: exclusiveUBound(:)
      integer,               intent(out),   optional :: exclusiveCount(:)
      integer,               intent(out),   optional :: computationalLBound(:)
      integer,               intent(out),   optional :: computationalUBound(:)
      integer,               intent(out),   optional :: computationalCount(:)
      integer,               intent(out),   optional :: totalLBound(:)
      integer,               intent(out),   optional :: totalUBound(:)
      integer,               intent(out),   optional :: totalCount(:)
      integer,               intent(out),   optional :: rc
```

STATUS:

- This interface is backward compatible with ESMF versions starting at 5.2.0r. If code using this interface compiles with any version of ESMF starting with 5.2.0r, then it will compile with the current version.

DESCRIPTION:

This method gets a Fortran pointer to the piece of memory which holds the coordinate data on the local DE for the given coordinate dimension and stagger locations. This is useful, for example, for setting the coordinate values in a Grid, or for reading the coordinate values. Currently this method supports up to three coordinate dimensions, of either R4 or R8 datatype. See below for specific supported values. If the coordinates that you are trying to retrieve are of higher dimension, use the `ESMF_GetCoord()` interface that returns coordinate values in an `ESMF_Array` instead. That interface supports the retrieval of coordinates up to 7D.

Supported values for the farrayPtr argument are:

real(ESMF_KIND_R4), pointer :: farrayPtr(:)

real(ESMF_KIND_R4), pointer :: farrayPtr(:,:)

real(ESMF_KIND_R4), pointer :: farrayPtr(:,:,:)

real(ESMF_KIND_R8), pointer :: farrayPtr(:)

real(ESMF_KIND_R8), pointer :: farrayPtr(:,:)

real(ESMF_KIND_R8), pointer :: farrayPtr(:,:,:)

The arguments are:

grid Grid to get the information from.

coordDim The coordinate dimension to get the data from (e.g. 1=x).

[staggerloc] The stagger location to get the information for. Please see Section 32.2.6 for a list of predefined stagger locations. If not present, defaults to ESMF_STAGGERLOC_CENTER.

[localDE] The local DE for which information is requested. `[0,..,localDECount-1]`. For `localDECount==1` the `localDE` argument may be omitted, in which case it will default to `localDE=0`.

farrayPtr The pointer to the coordinate data.

[datacopyflag] If not specified, default to `ESMF_DATACOPY_REFERENCE`, in this case farrayPtr is a reference to the data in the Grid coordinate arrays. Please see Section 55.13 for further description and a list of valid values.

[exclusiveLBound] Upon return this holds the lower bounds of the exclusive region. `exclusiveLBound` must be allocated to be of size equal to the coord dimCount.

[exclusiveUBound] Upon return this holds the upper bounds of the exclusive region. `exclusiveUBound` must be allocated to be of size equal to the coord dimCount.

[exclusiveCount] Upon return this holds the number of items, `exclusiveUBound-exclusiveLBound+1`, in the exclusive region per dimension. `exclusiveCount` must be allocated to be of size equal to the coord dimCount. Please see Section 32.3.19 for a description of the regions and their associated bounds and counts.

[computationalLBound] Upon return this holds the lower bounds of the stagger region. `computationalLBound` must be allocated to be of size equal to the coord dimCount. Please see Section 32.3.19 for a description of the regions and their associated bounds and counts.

[computationalUBound] Upon return this holds the upper bounds of the stagger region. `exclusiveUBound` must be allocated to be of size equal to the coord dimCount. Please see Section 32.3.19 for a description of the regions and their associated bounds and counts.

[computationalCount] Upon return this holds the number of items in the computational region per dimension (i.e. `computationalUBound-computationalLBound+1`). `computationalCount` must be allocated to be of size equal to the coord dimCount. Please see Section 32.3.19 for a description of the regions and their associated bounds and counts.

[totalLBound] Upon return this holds the lower bounds of the total region. `totalLBound` must be allocated to be of size equal to the coord dimCount. Please see Section 32.3.19 for a description of the regions and their associated bounds and counts.

[totalUBound] Upon return this holds the upper bounds of the total region. `totalUBound` must be allocated to be of size equal to the coord dimCount. Please see Section 32.3.19 for a description of the regions and their associated bounds and counts.

[totalCount] Upon return this holds the number of items in the total region per dimension (i.e. `totalUBound-totalLBound+1`). `totalCount` must be allocated to be of size equal to the coord dimCount. Please see Section 32.3.19 for a description of the regions and their associated bounds and counts.

[rc] Return code; equals `ESMF_SUCCESS` if there are no errors.

32.6.42 ESMF_GridGetCoord - Get coordinates and put into an Array

INTERFACE:

```
! Private name; call using ESMF_GridGetCoord()
    subroutine ESMF_GridGetCoordIntoArray(grid, coordDim, staggerloc, &
      array, rc)
```

ARGUMENTS:

```
      type(ESMF_Grid),        intent(in)            :: grid
      integer,                intent(in)            :: coordDim
      type (ESMF_StaggerLoc), intent(in),  optional :: staggerloc
      type(ESMF_Array),       intent(out)           :: array
 -- The following arguments require argument keyword syntax (e.g. rc=rc). --
      integer,                intent(out), optional :: rc
```

STATUS:

- This interface is backward compatible with ESMF versions starting at 5.2.0r. If code using this interface compiles with any version of ESMF starting with 5.2.0r, then it will compile with the current version.

DESCRIPTION:

This method allows the user to get access to the ESMF Array holding coordinate data at a particular stagger location. This is useful, for example, to set the coordinate values. To have an Array to access, the coordinate Arrays must have already been allocated, for example by `ESMF_GridAddCoord` or `ESMF_GridSetCoord`.

The arguments are:

grid The grid to get the coord array from.

coordDim The coordinate dimension to get the data from (e.g. 1=x).

[staggerloc] The stagger location from which to get the arrays. Please see Section 32.2.6 for a list of predefined stagger locations. If not present, defaults to ESMF_STAGGERLOC_CENTER.

array An array into which to put the coordinate information.

[rc] Return code; equals `ESMF_SUCCESS` if there are no errors.

32.6.43 ESMF_GridGetCoord - Get DE-local coordinates from a specific index location in a Grid

INTERFACE:

```
   ! Private name; call using ESMF_GridGetCoord()
      subroutine ESMF_GridGetCoordR4(grid, staggerloc, localDE, &
        index, coord, rc)
```

ARGUMENTS:

```
      type(ESMF_Grid),        intent(in)            :: grid
      type (ESMF_StaggerLoc), intent(in),  optional :: staggerloc
      integer,                intent(in),  optional :: localDE
      integer,                intent(in)            :: index(:)
      real(ESMF_KIND_R4),     intent(out)           :: coord(:)
 -- The following arguments require argument keyword syntax (e.g. rc=rc). --
      integer,                intent(out), optional :: rc
```

STATUS:

- This interface is backward compatible with ESMF versions starting at 5.2.0r. If code using this interface compiles with any version of ESMF starting with 5.2.0r, then it will compile with the current version.

DESCRIPTION:

Given a specific index location in a Grid, this method returns the full set of coordinates from that index location. This method should work no matter what the factorization of the Grid's coordinate components.

The arguments are:

grid Grid to get the information from.

[staggerloc] The stagger location to get the information for. Please see Section 32.2.6 for a list of predefined stagger locations. If not present, defaults to ESMF_STAGGERLOC_CENTER.

[localDE] The local DE for which information is requested. `[0,..,localDECount-1]`. For `localDECount==1` the `localDE` argument may be omitted, in which case it will default to `localDE=0`.

index This array holds the index location to be queried in the Grid. This array must at least be of the size Grid rank.

coord This array will be filled with the coordinate data. This array must at least be of the size Grid rank.

[rc] Return code; equals `ESMF_SUCCESS` if there are no errors.

32.6.44 ESMF_GridGetCoord - Get DE-local coordinates from a specific index location in a Grid

INTERFACE:

```
! Private name; call using ESMF_GridGetCoord()
    subroutine ESMF_GridGetCoordR8(grid, staggerloc, localDE, &
      index, coord, rc)
```

ARGUMENTS:

```
    type(ESMF_Grid),        intent(in)            :: grid
    type (ESMF_StaggerLoc), intent(in),  optional :: staggerloc
    integer,                intent(in),  optional :: localDE
    integer,                intent(in)            :: index(:)
    real(ESMF_KIND_R8),     intent(out)           :: coord(:)
-- The following arguments require argument keyword syntax (e.g. rc=rc). --
    integer,                intent(out), optional :: rc
```

STATUS:

- This interface is backward compatible with ESMF versions starting at 5.2.0r. If code using this interface compiles with any version of ESMF starting with 5.2.0r, then it will compile with the current version.

DESCRIPTION:

Given a specific index location in a Grid, this method returns the full set of coordinates from that index location. This method should work no matter what the factorization of the Grid's coordinate components.

The arguments are:

grid Grid to get the information from.

[staggerloc] The stagger location to get the information for. Please see Section 32.2.6 for a list of predefined stagger locations. If not present, defaults to ESMF_STAGGERLOC_CENTER.

[localDE] The local DE for which information is requested. `[0,..,localDECount-1]`. For `localDECount==1` the `localDE` argument may be omitted, in which case it will default to `localDE=0`.

index This array holds the index location to be queried in the Grid. This array must at least be of the size Grid rank.

coord This array will be filled with the coordinate data. This array must at least be of the size Grid rank.

[rc] Return code; equals `ESMF_SUCCESS` if there are no errors.

32.6.45 ESMF_GridGetCoord - Get information about the coordinates at a particular stagger location

INTERFACE:

```
! Private name; call using ESMF_GridGetCoord()
    subroutine ESMF_GridGetCoordInfo(grid, &
      staggerloc, isPresent, rc)
```

ARGUMENTS:

```
    type(ESMF_Grid),           intent(in)            :: grid
-- The following arguments require argument keyword syntax (e.g. rc=rc). --
    type (ESMF_StaggerLoc),    intent(in),  optional :: staggerloc
    logical,                   intent(out), optional :: isPresent
    integer,                   intent(out), optional :: rc
```

DESCRIPTION:

This method allows the user to get information about the coordinates on a given stagger.

The arguments are:

grid Grid to get the information from.

[staggerloc] The stagger location from which to get information. Please see Section 32.2.6 for a list of predefined stagger locations. If not present, defaults to ESMF_STAGGERLOC_CENTER.

[isPresent] If .true. then coordinates have been added on this staggerloc.

[rc] Return code; equals `ESMF_SUCCESS` if there are no errors.

32.6.46 ESMF_GridGetCoordBounds - Get Grid coordinate bounds

INTERFACE:

```
subroutine ESMF_GridGetCoordBounds(grid, coordDim,   &
  staggerloc, localDE, exclusiveLBound, exclusiveUBound, &
  exclusiveCount, computationalLBound, computationalUBound , &
  computationalCount, totalLBound, totalUBound, totalCount, rc)
```

ARGUMENTS:

```
      type(ESMF_Grid),        intent(in)            :: grid
      integer,                intent(in)            :: coordDim
 -- The following arguments require argument keyword syntax (e.g. rc=rc). --
      type (ESMF_StaggerLoc), intent(in),  optional :: staggerloc
      integer,                intent(in),  optional :: localDE
      integer,        target, intent(out), optional :: exclusiveLBound(:)
      integer,        target, intent(out), optional :: exclusiveUBound(:)
      integer,        target, intent(out), optional :: exclusiveCount(:)
      integer,        target, intent(out), optional :: computationalLBound(:)
      integer,        target, intent(out), optional :: computationalUBound(:)
      integer,        target, intent(out), optional :: computationalCount(:)
      integer,        target, intent(out), optional :: totalLBound(:)
      integer,        target, intent(out), optional :: totalUBound(:)
      integer,        target, intent(out), optional :: totalCount(:)
      integer,                intent(out), optional :: rc
```

STATUS:

- This interface is backward compatible with ESMF versions starting at 5.2.0r. If code using this interface compiles with any version of ESMF starting with 5.2.0r, then it will compile with the current version.

DESCRIPTION:

This method gets information about the range of index space which a particular piece of coordinate data occupies. In other words, this method returns the bounds of the coordinate arrays. Note that unlike the output from the Array, these values also include the undistributed dimensions and are ordered to reflect the order of the indices in the coordinate. So, for example, `totalLBound` and `totalUBound` should match the bounds of the Fortran array retrieved by `ESMF_GridGetCoord`.

The arguments are:

grid Grid to get the information from.

coordDim The coordinate dimension to get the information for (e.g. 1=x).

[staggerloc] The stagger location to get the information for. Please see Section 32.2.6 for a list of predefined stagger locations. If not present, defaults to ESMF_STAGGERLOC_CENTER.

[localDE] The local DE for which information is requested. `[0,..,localDECount-1]`. For `localDECount==1` the `localDE` argument may be omitted, in which case it will default to `localDE=0`.

[exclusiveLBound] Upon return this holds the lower bounds of the exclusive region. `exclusiveLBound` must be allocated to be of size equal to the coord dimCount. Please see Section 32.3.19 for a description of the regions and their associated bounds and counts.

[exclusiveUBound] Upon return this holds the upper bounds of the exclusive region. `exclusiveUBound` must be allocated to be of size equal to the coord dimCount. Please see Section 32.3.19 for a description of the regions and their associated bounds and counts.

[exclusiveCount] Upon return this holds the number of items, `exclusiveUBound-exclusiveLBound+1`, in the exclusive region per dimension. `exclusiveCount` must be allocated to be of size equal to the coord dimCount. Please see Section 32.3.19 for a description of the regions and their associated bounds and counts.

[computationalLBound] Upon return this holds the lower bounds of the stagger region. `computationalLBound` must be allocated to be of size equal to the coord dimCount. Please see Section 32.3.19 for a description of the regions and their associated bounds and counts.

[computationalUBound] Upon return this holds the upper bounds of the stagger region. `computationalUBound` must be allocated to be of size equal to the coord dimCount. Please see Section 32.3.19 for a description of the regions and their associated bounds and counts.

[computationalCount] Upon return this holds the number of items in the computational region per dimension (i.e. `computationalUBound-computationalLBound+1`). `computationalCount` must be allocated to be of size equal to the coord dimCount. Please see Section 32.3.19 for a description of the regions and their associated bounds and counts.

[totalLBound] Upon return this holds the lower bounds of the total region. `totalLBound` must be allocated to be of size equal to the coord dimCount. Please see Section 32.3.19 for a description of the regions and their associated bounds and counts.

[totalUBound] Upon return this holds the upper bounds of the total region. `totalUBound` must be allocated to be of size equal to the coord dimCount. Please see Section 32.3.19 for a description of the regions and their associated bounds and counts.

[totalCount] Upon return this holds the number of items in the total region per dimension (i.e. `totalUBound-totalLBound+1`). `totalCount` must be allocated to be of size equal to the coord dimCount. Please see Section 32.3.19 for a description of the regions and their associated bounds and counts.

[rc] Return code; equals `ESMF_SUCCESS` if there are no errors.

32.6.47 ESMF_GridGetItem - Get a DE-local Fortran array pointer to Grid item data and item bounds

INTERFACE:

```
subroutine ESMF_GridGetItem<rank><type><kind>(grid, itemflag,  &
  staggerloc, localDE, farrayPtr, datacopyflag,                 &
  exclusiveLBound, exclusiveUBound, exclusiveCount,             &
  computationalLBound, computationalUBound, computationalCount,  &
  totalLBound, totalUBound, totalCount, rc)
```

ARGUMENTS:

```
      type(ESMF_Grid),      intent(in)                :: grid
      type (ESMF_GridItem_Flag),intent(in)            :: itemflag
-- The following arguments require argument keyword syntax (e.g. rc=rc). --
      type (ESMF_StaggerLoc), intent(in),  optional  :: staggerloc
      integer,              intent(in),    optional  :: localDE
      <type> (ESMF_KIND_<kind>), pointer              :: farrayPtr(<rank>)
      type(ESMF_DataCopy_Flag),intent(in), optional  :: datacopyflag
      integer,              intent(out),   optional  :: exclusiveLBound(:)
      integer,              intent(out),   optional  :: exclusiveUBound(:)
      integer,              intent(out),   optional  :: exclusiveCount(:)
      integer,              intent(out),   optional  :: computationalLBound(:)
      integer,              intent(out),   optional  :: computationalUBound(:)
      integer,              intent(out),   optional  :: computationalCount(:)
      integer,              intent(out),   optional  :: totalLBound(:)
      integer,              intent(out),   optional  :: totalUBound(:)
      integer,              intent(out),   optional  :: totalCount(:)
      integer,              intent(out),   optional  :: rc
```

STATUS:

- This interface is backward compatible with ESMF versions starting at 5.2.0r. If code using this interface compiles with any version of ESMF starting with 5.2.0r, then it will compile with the current version.

DESCRIPTION:

This method gets a Fortran pointer to the piece of memory which holds the item data on the local DE for the given stagger locations. This is useful, for example, for setting the item values in a Grid, or for reading the item values. Currently this method supports up to three grid dimensions, but is limited to the I4 datatype. See below for specific supported values. If the item values that you are trying to retrieve are of higher dimension, use the `ESMF_GetItem()` interface that returns coordinate values in an `ESMF_Array` instead. That interface supports the retrieval of coordinates up to 7D.

Supported values for the farrayPtr argument are:

integer(ESMF_KIND_I4), pointer :: farrayPtr(:)

integer(ESMF_KIND_I4), pointer :: farrayPtr(:,:)

integer(ESMF_KIND_I4), pointer :: farrayPtr(:,:,:)

real(ESMF_KIND_R4), pointer :: farrayPtr(:)

real(ESMF_KIND_R4), pointer :: farrayPtr(:,:)

real(ESMF_KIND_R4), pointer :: farrayPtr(:,:,:)

real(ESMF_KIND_R8), pointer :: farrayPtr(:)

real(ESMF_KIND_R8), pointer :: farrayPtr(:,:)

real(ESMF_KIND_R8), pointer :: farrayPtr(:,:,:)

The arguments are:

grid Grid to get the information from.

itemflag The item to get the information for. Please see Section 32.2.2 for a list of valid items.

[staggerloc] The stagger location to get the information for. Please see Section 32.2.6 for a list of predefined stagger locations. If not present, defaults to ESMF_STAGGERLOC_CENTER.

[localDE] The local DE for which information is requested. `[0,..,localDECount-1]`. For `localDECount==1` the `localDE` argument may be omitted, in which case it will default to `localDE=0`.

farrayPtr The pointer to the item data.

[datacopyflag] If not specified, default to `ESMF_DATACOPY_REFERENCE`, in this case farrayPtr is a reference to the data in the Grid item arrays. Please see Section 55.13 for further description and a list of valid values.

[exclusiveLBound] Upon return this holds the lower bounds of the exclusive region. `exclusiveLBound` must be allocated to be of size equal to the grid dimCount.

[exclusiveUBound] Upon return this holds the upper bounds of the exclusive region. `exclusiveUBound` must be allocated to be of size equal to the grid dimCount.

[exclusiveCount] Upon return this holds the number of items in the exclusive region per dimension (i.e. `exclusiveUBound-exclusiveLBound+1`). `exclusiveCount` must be allocated to be of size equal to the grid dimCount. Please see Section 32.3.19 for a description of the regions and their associated bounds and counts.

[computationalLBound] Upon return this holds the lower bounds of the stagger region. `computationalLBound` must be allocated to be of size equal to the grid dimCount. Please see Section 32.3.19 for a description of the regions and their associated bounds and counts.

[computationalUBound] Upon return this holds the upper bounds of the stagger region. `exclusiveUBound` must be allocated to be of size equal to the grid dimCount. Please see Section 32.3.19 for a description of the regions and their associated bounds and counts.

[computationalCount] Upon return this holds the number of items in the computational region per dimension (i.e. `computationalUBound-computationalLBound+1`). `computationalCount` must be allocated to be of size equal to the grid dimCount. Please see Section 32.3.19 for a description of the regions and their associated bounds and counts.

[totalLBound] Upon return this holds the lower bounds of the total region. `totalLBound` must be allocated to be of size equal to the grid dimCount. Please see Section 32.3.19 for a description of the regions and their associated bounds and counts.

[totalUBound] Upon return this holds the upper bounds of the total region. `totalUBound` must be allocated to be of size equal to the grid dimCount. Please see Section 32.3.19 for a description of the regions and their associated bounds and counts.

[totalCount] Upon return this holds the number of items in the total region per dimension (i.e. `totalUBound-totalLBound+1`). `totalCount` must be allocated to be of size equal to the grid dimCount. Please see Section 32.3.19 for a description of the regions and their associated bounds and counts.

[rc] Return code; equals `ESMF_SUCCESS` if there are no errors.

32.6.48 ESMF_GridGetItem - Get a Grid item and put into an Array

INTERFACE:

```
! Private name; call using ESMF_GridGetItem()
    subroutine ESMF_GridGetItemIntoArray(grid, itemflag,  staggerloc, &
      array, rc)
```

ARGUMENTS:

```
      type(ESMF_Grid),           intent(in)            :: grid
      type (ESMF_GridItem_Flag), intent(in)            :: itemflag
      type (ESMF_StaggerLoc),    intent(in),  optional :: staggerloc
      type(ESMF_Array),          intent(out)           :: array
 -- The following arguments require argument keyword syntax (e.g. rc=rc). --
      integer,                   intent(out), optional :: rc
```

STATUS:

- This interface is backward compatible with ESMF versions starting at 5.2.0r. If code using this interface compiles with any version of ESMF starting with 5.2.0r, then it will compile with the current version.

DESCRIPTION:

This method allows the user to get access to the ESMF Array holding item data at a particular stagger location. This is useful, for example, to set the item values. To have an Array to access, the item Array must have already been allocated, for example by `ESMF_GridAddItem` or `ESMF_GridSetItem`.

The arguments are:

grid Grid to get the information from.

itemflag The item from which to get the arrays. Please see Section 32.2.2 for a list of valid items.

[staggerloc] The stagger location from which to get the arrays. Please see Section 32.2.6 for a list of predefined stagger locations. If not present, defaults to ESMF_STAGGERLOC_CENTER.

array An array into which to put the item information.

[rc] Return code; equals `ESMF_SUCCESS` if there are no errors.

32.6.49 ESMF_GridGetItem - Get information about an item at a particular stagger location

INTERFACE:

```
   ! Private name; call using ESMF_GridGetItem()
      subroutine ESMF_GridGetItemInfo(grid, itemflag, &
        staggerloc, isPresent, rc)
```

ARGUMENTS:

```
      type(ESMF_Grid),           intent(in)            :: grid
      type (ESMF_GridItem_Flag), intent(in)            :: itemflag
 -- The following arguments require argument keyword syntax (e.g. rc=rc). --
      type (ESMF_StaggerLoc),    intent(in),  optional :: staggerloc
      logical,                   intent(out), optional :: isPresent
      integer,                   intent(out), optional :: rc
```

DESCRIPTION:

This method allows the user to get information about a given item on a given stagger.

The arguments are:

grid Grid to get the information from.

itemflag The item for which to get information. Please see Section 32.2.2 for a list of valid items.

[staggerloc] The stagger location for which to get information. Please see Section 32.2.6 for a list of predefined stagger locations. If not present, defaults to ESMF_STAGGERLOC_CENTER.

[isPresent] If .true. then an item of type itemflag has been added to this staggerloc.

[rc] Return code; equals `ESMF_SUCCESS` if there are no errors.

32.6.50 ESMF_GridGetItemBounds - Get DE-local item bounds from a Grid

INTERFACE:

```
subroutine ESMF_GridGetItemBounds(grid, itemflag,  &
  staggerloc, localDE, &
  exclusiveLBound, exclusiveUBound, exclusiveCount, &
  computationalLBound, computationalUBound, computationalCount,  &
  totalLBound, totalUBound, totalCount, rc)
```

ARGUMENTS:

```
      type(ESMF_Grid),        intent(in)            :: grid
      type (ESMF_GridItem_Flag), intent(in)         :: itemflag
 -- The following arguments require argument keyword syntax (e.g. rc=rc). --
      type (ESMF_StaggerLoc), intent(in),  optional :: staggerloc
      integer,                intent(in),  optional :: localDE
      integer,        target, intent(out), optional :: exclusiveLBound(:)
      integer,        target, intent(out), optional :: exclusiveUBound(:)
      integer,        target, intent(out), optional :: exclusiveCount(:)
      integer,        target, intent(out), optional :: computationalLBound(:)
      integer,        target, intent(out), optional :: computationalUBound(:)
      integer,        target, intent(out), optional :: computationalCount(:)
      integer,        target, intent(out), optional :: totalLBound(:)
      integer,        target, intent(out), optional :: totalUBound(:)
      integer,        target, intent(out), optional :: totalCount(:)
      integer,                intent(out), optional :: rc
```

STATUS:

- This interface is backward compatible with ESMF versions starting at 5.2.0r. If code using this interface compiles with any version of ESMF starting with 5.2.0r, then it will compile with the current version.

DESCRIPTION:

This method gets information about the range of index space which a particular piece of item data occupies. In other words, this method returns the bounds of the item arrays. Note that unlike the output from the Array, these values also include the undistributed dimensions and are ordered to reflect the order of the indices in the item. So, for example, `totalLBound` and `totalUBound` should match the bounds of the Fortran array retrieved by `ESMF_GridGetItem`.

The arguments are:

grid Grid to get the information from.

itemflag The item to get the information for. Please see Section 32.2.2 for a list of valid items.

[staggerloc] The stagger location to get the information for. Please see Section 32.2.6 for a list of predefined stagger locations. If not present, defaults to ESMF_STAGGERLOC_CENTER.

[localDE] The local DE for which information is requested. `[0,..,localDECount-1]`. For `localDECount==1` the `localDE` argument may be omitted, in which case it will default to `localDE=0`.

[exclusiveLBound] Upon return this holds the lower bounds of the exclusive region. `exclusiveLBound` must be allocated to be of size equal to the item dimCount. Please see Section 32.3.19 for a description of the regions and their associated bounds and counts.

[exclusiveUBound] Upon return this holds the upper bounds of the exclusive region. `exclusiveUBound` must be allocated to be of size equal to the item dimCount. Please see Section 32.3.19 for a description of the regions and their associated bounds and counts.

[exclusiveCount] Upon return this holds the number of items, `exclusiveUBound-exclusiveLBound+1`, in the exclusive region per dimension. `exclusiveCount` must be allocated to be of size equal to the item dimCount. Please see Section 32.3.19 for a description of the regions and their associated bounds and counts.

[computationalLBound] Upon return this holds the lower bounds of the stagger region. `computationalLBound` must be allocated to be of size equal to the item dimCount. Please see Section 32.3.19 for a description of the regions and their associated bounds and counts.

[computationalUBound] Upon return this holds the upper bounds of the stagger region. `computationalUBound` must be allocated to be of size equal to the item dimCount. Please see Section 32.3.19 for a description of the regions and their associated bounds and counts.

[computationalCount] Upon return this holds the number of items in the computational region per dimension (i.e. `computationalUBound-computationalLBound+1`). `computationalCount` must be allocated to be of size equal to the item dimCount. Please see Section 32.3.19 for a description of the regions and their associated bounds and counts.

[totalLBound] Upon return this holds the lower bounds of the total region. `totalLBound` must be allocated to be of size equal to the item dimCount. Please see Section 32.3.19 for a description of the regions and their associated bounds and counts.

[totalUBound] Upon return this holds the upper bounds of the total region. `totalUBound` must be allocated to be of size equal to the item dimCount. Please see Section 32.3.19 for a description of the regions and their associated bounds and counts.

[totalCount] Upon return this holds the number of items in the total region per dimension (i.e. `totalUBound-totalLBound+1`). `totalCount` must be allocated to be of size equal to the item dimCount. Please see Section 32.3.19 for a description of the regions and their associated bounds and counts.

[rc] Return code; equals `ESMF_SUCCESS` if there are no errors.

32.6.51 ESMF_GridIsCreated - Check whether a Grid object has been created

INTERFACE:

```
function ESMF_GridIsCreated(grid, rc)
```

RETURN VALUE:

```
logical :: ESMF_GridIsCreated
```

ARGUMENTS:

```
     type(ESMF_Grid), intent(in)            :: grid
 -- The following arguments require argument keyword syntax (e.g. rc=rc). --
     integer,             intent(out), optional :: rc
```

DESCRIPTION:

Return `.true.` if the `grid` has been created. Otherwise return `.false.`. If an error occurs, i.e. `rc /= ESMF_SUCCESS` is returned, the return value of the function will also be `.false.`.

The arguments are:

grid `ESMF_Grid` queried.

[rc] Return code; equals `ESMF_SUCCESS` if there are no errors.

32.6.52 ESMF_GridMatch - Check if two Grid objects match

INTERFACE:

```
function ESMF_GridMatch(grid1, grid2, globalflag, rc)
```

RETURN VALUE:

```
type(ESMF_GridMatch_Flag) :: ESMF_GridMatch
```

ARGUMENTS:

```
     type(ESMF_Grid),  intent(in)              :: grid1
     type(ESMF_Grid),  intent(in)              :: grid2
 -- The following arguments require argument keyword syntax (e.g. rc=rc). --
     logical,          intent(in),   optional  :: globalflag
     integer,          intent(out),  optional  :: rc
```

DESCRIPTION:

Check if `grid1` and `grid2` match. Returns a range of values of type ESMF_GridMatch indicating how closely the Grids match. For a description of the possible return values, please see 32.2.3. Please also note that by default this call is not collective and only returns the match for the piece of the Grids on the local PET. In this case, it is possible for this call to return a different match on different PETs for the same Grids. To do a global match operation set the `globalflag` argument to .true.. In this case, the call becomes collective across the current VM, ensuring the same result is returned on all PETs.

The arguments are:

grid1 `ESMF_Grid` object.

grid2 `ESMF_Grid` object.

[globalflag] By default this flag is set to false. When it's set to true, the function performs the match check globally. In this case, the method becomes collective across the current VM.

[rc] Return code; equals `ESMF_SUCCESS` if there are no errors.

32.6.53 ESMF_GridRedist - Redistribute the coordinates of a Grid

INTERFACE:

```
     subroutine ESMF_GridRedist(srcGrid, dstGrid, routehandle, rc)
```

ARGUMENTS:

```
        type(ESMF_Grid),        intent(in)              :: srcGrid
        type(ESMF_Grid),        intent(inout)           :: dstGrid
        type(ESMF_RouteHandle),intent(inout)            :: routehandle
 -- The following arguments require argument keyword syntax (e.g. rc=rc). --
        integer,                intent(out),  optional  :: rc
```

DESCRIPTION:

This call is companion to the `ESMF_GridCreate()` that allows the user to copy an existing ESMF Grid, but with a new distribution. The `ESMF_GridRedist()` allows the user to repeatedly redistribute the coordinates from `srcGrid` to `dstGrid`.

The arguments are:

srcGrid The source grid providing the coordinates.

srcGrid The destination grid receiving the coordinates from `srcGrid`.

routehandle The `ESMF_RouteHandle` object returned by the companion method `ESMF_GridCreate()` used to create `dstGrid` from `srcGrid`.

[rc] Return code; equals `ESMF_SUCCESS` if there are no errors.

32.6.54 ESMF_GridSetCoord - Set coordinates using Arrays

INTERFACE:

```
      subroutine ESMF_GridSetCoordFromArray(grid, coordDim, staggerloc, &
        array, rc)
```

ARGUMENTS:

```
      type(ESMF_Grid),        intent(in)            :: grid
      integer,                intent(in)            :: coordDim
      type (ESMF_StaggerLoc), intent(in),  optional :: staggerloc
      type(ESMF_Array),       intent(in)            :: array
 -- The following arguments require argument keyword syntax (e.g. rc=rc). --
      integer,                intent(out), optional :: rc
```

STATUS:

- This interface is backward compatible with ESMF versions starting at 5.2.0r. If code using this interface compiles with any version of ESMF starting with 5.2.0r, then it will compile with the current version.

DESCRIPTION:

This method sets the passed in Array as the holder of the coordinate data for stagger location staggerloc and coordinate coord. This method can be used in place of ESMF_GridAddCoord(). In fact, if the Grid location already contains an Array for this coordinate, then this one replaces it. For this method to replace ESMF_GridAddCoord() and produce a valid set of coordinates, then this method must be used to set an Array for each coordDim ranging from 1 to the dimCount of the passed in Grid.

The arguments are:

grid The grid to set the coord in.

coordDim The coordinate dimension to put the data in (e.g. 1=x).

[staggerloc] The stagger location into which to copy the arrays. Please see Section 32.2.6 for a list of predefined stagger locations. If not present, defaults to ESMF_STAGGERLOC_CENTER.

array An array to set the grid coordinate information from.

[rc] Return code; equals `ESMF_SUCCESS` if there are no errors.

32.6.55 ESMF_GridSetItem - Set an item using an Array

INTERFACE:

```
   ! Private name; call using ESMF_GridSetItem()
      subroutine ESMF_GridSetItemFromArray(grid, itemflag,  staggerloc, &
        array, rc)
```

ARGUMENTS:

```
      type(ESMF_Grid),           intent(in)            :: grid
      type (ESMF_GridItem_Flag), intent(in)            :: itemflag
      type (ESMF_StaggerLoc),    intent(in),  optional :: staggerloc
      type(ESMF_Array),          intent(in)            :: array
 -- The following arguments require argument keyword syntax (e.g. rc=rc). --
      integer,                   intent(out), optional :: rc
```

STATUS:

- This interface is backward compatible with ESMF versions starting at 5.2.0r. If code using this interface compiles with any version of ESMF starting with 5.2.0r, then it will compile with the current version.

DESCRIPTION:

This method sets the passed in Array as the holder of the item data for stagger location `staggerloc` and item `itemflag`. If the location already contains an Array, then this one overwrites it. This method can be used as a replacement for ESMF_GridAddItem().

The arguments are:

grid The grid in which to set the array.

itemflag The item into which to copy the arrays. Please see Section 32.2.2 for a list of valid items.

[staggerloc] The stagger location into which to copy the arrays. Please see Section 32.2.6 for a list of predefined stagger locations. If not present, defaults to ESMF_STAGGERLOC_CENTER.

array An array to set the grid item information from.

[rc] Return code; equals `ESMF_SUCCESS` if there are no errors.

32.6.56 ESMF_GridValidate - Validate Grid internals

INTERFACE:

```
subroutine ESMF_GridValidate(grid, rc)
```

ARGUMENTS:

```
     type(ESMF_Grid), intent(in)              :: grid
 -- The following arguments require argument keyword syntax (e.g. rc=rc). --
     integer,         intent(out),  optional  :: rc
```

STATUS:

- This interface is backward compatible with ESMF versions starting at 5.2.0r. If code using this interface compiles with any version of ESMF starting with 5.2.0r, then it will compile with the current version.

DESCRIPTION:

Validates that the `Grid` is internally consistent. Note that one of the checks that the Grid validate does is the Grid status. Currently, the validate will return an error if the grid is not at least `ESMF_GRIDSTATUS_COMPLETE`. This means that if a Grid was created with the `ESMF_GridEmptyCreate` method, it must also have been finished with `ESMF_GridEmptyComplete()` to be valid. If a Grid was created with another create call it should automatically have the correct status level to pass the status part of the validate. The Grid validate at this time doesn't check for the presence or consistency of the Grid coordinates. The method returns an error code if problems are found.

The arguments are:

grid Specified `ESMF_Grid` object.

[rc] Return code; equals `ESMF_SUCCESS` if there are no errors.

32.7 Class API: StaggerLoc Methods

32.7.1 ESMF_StaggerLocGet - Get the value of one dimension of a StaggerLoc

INTERFACE:

```
! Private name; call using ESMF_StaggerLocGet()
    subroutine ESMF_StaggerLocGetDim(staggerloc, dim, loc, &
         rc)
```

ARGUMENTS:

```
    type (ESMF_StaggerLoc), intent(in)  :: staggerloc
    integer,                intent(in)  :: dim
-- The following arguments require argument keyword syntax (e.g. rc=rc). --
    integer, optional,      intent(out) :: loc
    integer, optional                   :: rc
```

DESCRIPTION:

Gets the position of a particular dimension of a cell `staggerloc` The argument `loc` will be only be 0,1. If `loc` is 0 it means the position should be in the center in that dimension. If `loc` is +1 then for the dimension, the position should be on the positive side of the cell. Please see Section 32.3.25 for diagrams.

The arguments are:

staggerloc Stagger location for which to get information.

dim Dimension for which to get information (1-7).

[loc] Output position data (should be either 0,1).

[rc] Return code; equals `ESMF_SUCCESS` if there are no errors.

32.7.2 ESMF_StaggerLocSet - Set a StaggerLoc to a particular position in the cell

INTERFACE:

```
! Private name; call using ESMF_StaggerLocSet()
   subroutine ESMF_StaggerLocSetAllDim(staggerloc, loc, rc)
```

ARGUMENTS:

```
      type (ESMF_StaggerLoc), intent(inout) :: staggerloc
      integer,                intent(in)    :: loc(:)
-- The following arguments require argument keyword syntax (e.g. rc=rc). --
      integer, optional                     :: rc
```

STATUS:

- This interface is backward compatible with ESMF versions starting at 5.2.0r. If code using this interface compiles with any version of ESMF starting with 5.2.0r, then it will compile with the current version.

DESCRIPTION:

Sets a custom `staggerloc` to a position in a cell by using the array `loc`. The values in the array should only be 0,1. If loc(i) is 0 it ! means the position should be in the center in that dimension. If loc(i) is 1 then for dimension i, the position should be on the side of the cell. Please see Section 32.3.25 for diagrams and further discussion of custom stagger locations.

The arguments are:

staggerloc Grid location to be initialized

loc Array holding position data. Each entry in `loc` should only be 0 or 1. note that dimensions beyond those specified are set to 0.

[rc] Return code; equals `ESMF_SUCCESS` if there are no errors.

32.7.3 ESMF_StaggerLocSet - Set one dimension of a StaggerLoc to a particular position

INTERFACE:

```
! Private name; call using ESMF_StaggerLocSet()
     subroutine ESMF_StaggerLocSetDim(staggerloc, dim, loc, &
          rc)
```

ARGUMENTS:

```
      type (ESMF_StaggerLoc), intent(inout) :: staggerloc
      integer,                intent(in)    :: dim
      integer,                intent(in)    :: loc
-- The following arguments require argument keyword syntax (e.g. rc=rc). --
      integer, optional                     :: rc
```

STATUS:

- This interface is backward compatible with ESMF versions starting at 5.2.0r. If code using this interface compiles with any version of ESMF starting with 5.2.0r, then it will compile with the current version.

DESCRIPTION:

Sets a particular dimension of a custom `staggerloc` to a position in a cell by using the variable `loc`. The variable `loc` should only be 0,1. If `loc` is 0 it means the position should be in the center in that dimension. If `loc` is +1 then for the dimension, the position should be on the positive side of the cell. Please see Section 32.3.25 for diagrams and further discussion of custom stagger locations.

The arguments are:

staggerloc Stagger location to be initialized

dim Dimension to be changed (1-7).

loc Position data should be either 0,1.

[rc] Return code; equals `ESMF_SUCCESS` if there are no errors.

32.7.4 ESMF_StaggerLocString - Return a StaggerLoc as a string

INTERFACE:

```
      subroutine ESMF_StaggerLocString(staggerloc, string, &
           rc)
```

ARGUMENTS:

```
      type(ESMF_StaggerLoc), intent(in)  :: staggerloc
      character (len = *),   intent(out) :: string
-- The following arguments require argument keyword syntax (e.g. rc=rc). --
      integer, optional,     intent(out) :: rc
```

STATUS:

- This interface is backward compatible with ESMF versions starting at 5.2.0r. If code using this interface compiles with any version of ESMF starting with 5.2.0r, then it will compile with the current version.

DESCRIPTION:

Return an `ESMF_StaggerLoc` as a printable string.

The arguments are:

staggerloc The `ESMF_StaggerLoc` to be turned into a string.

string Return string.

[rc] Return code; equals `ESMF_SUCCESS` if there are no errors.

32.7.5 ESMF_StaggerLocPrint - Print StaggerLoc information

INTERFACE:

```
      subroutine ESMF_StaggerLocPrint(staggerloc, rc)
```

ARGUMENTS:

```
      type (ESMF_StaggerLoc), intent(in)  :: staggerloc
 -- The following arguments require argument keyword syntax (e.g. rc=rc). --
      integer, optional,      intent(out) :: rc
```

STATUS:

- This interface is backward compatible with ESMF versions starting at 5.2.0r. If code using this interface compiles with any version of ESMF starting with 5.2.0r, then it will compile with the current version.

DESCRIPTION:

Print the internal data members of an `ESMF_StaggerLoc` object.

The arguments are:

staggerloc ESMF_StaggerLoc object as the method input

[rc] Return code; equals `ESMF_SUCCESS` if there are no errors.

33 LocStream Class

33.1 Description

A location stream (LocStream) can be used to represent the locations of a set of data points. For example, in the data assimilation world, LocStreams can be used to represent a set of observations. The values of the data points are stored within a Field or FieldBundle created using the LocStream.

The locations are generally described using Cartesian (x, y, z), or (lat, lon, radius) coordinates. The coordinates are stored using constructs called *keys*. A Key is essentially a list of point descriptors, one for each data point. They may hold other information besides the coordinates - a mask, for example. They may also hold a second set of coordinates. Keys are referenced by name - see 33.2.1 and 33.2.2 for specific keynames required in regridding. Each key must contain the same number of elements as there are data points in the LocStream. While there is no assumption in the ordering of the points, the order chosen must be maintained in each of the keys.

LocStreams can be very large. Data assimilation systems might use LocStreams with up to 10^8 observations, so efficiency is critical. LocStreams can be created from file, see 33.4.14.

Common operations involving LocStreams are similar to those involving Grids. For example, LocStreams allow users to:

1. Create a Field or FieldBundle on a LocStream
2. Regrid data in Fields defined on LocStreams
3. Redistribute data between Fields defined on LocStreams
4. Gather or scatter a FieldBundle defined on a LocStream from/to a root DE
5. Extract Fortran array from Field which was defined on a LocStream

A LocStream differs from a Grid in that no topological structure is maintained between the points (e.g. the class contains no information about which point is the neighbor of which other point).

A LocStream is similar to a Mesh in that both are collections of irregularly positioned points. However, the two structures differ because a Mesh also has connectivity: each data point represents either a center or corner of a cell. There is no requirement that the points in a LocStream have connectivity, in fact there is no requirement that any two points have any particular spatial relationship at all.

33.2 Constants

33.2.1 Coordinate keyNames

DESCRIPTION:
For ESMF to be able to use coordinates specified in a LocStream key (e.g. in regridding) they need to be named with the appropriate identifiers. The particular identifiers depend on the coordinate system (i.e. coordSys argument) used to create the LocStream containing the keys. ESMF regridding expects these keys to be of type ESMF_TYPEKIND_R8.

The valid values are:

Coordinate System	**dimension 1**	**dimension 2**	**dimension 3 (if used)**
ESMF_COORDSYS_SPH_DEG	ESMF:Lon	ESMF:Lat	ESMF:Radius
ESMF_COORDSYS_SPH_RAD	ESMF:Lon	ESMF:Lat	ESMF:Radius
ESMF_COORDSYS_CART	ESMF:X	ESMF:Y	ESMF:Z

33.2.2 Masking keyName

DESCRIPTION:
Points within a LocStream can be marked and then potentially ignored during certain operations, like regridding. This masking information must be contained in a key named with the appropriate identifier. ESMF regridding expects this key to be of type ESMF_TYPEKIND_I4.

The valid value is:

ESMF:Mask

33.3 Use and Examples

33.3.1 Create a LocStream with user allocated memory

The following is an example of creating a LocStream object. After creation, key data is added, and a Field is created to hold data (temperature) at each location.

```
!------------------------------------------------------------------
! Get parallel information. Here petCount is the total number of
! running PETs, and localPet is the number of this particular PET.
!------------------------------------------------------------------
call ESMF_VMGet(vm, localPet=localPet, petCount=petCount, rc=rc)



!------------------------------------------------------------------
! Allocate and set example location information. Locations on a PET
! are wrapped around sphere. Each PET occupies a different latitude
! ranging from +50.0 to -50.0.
!------------------------------------------------------------------
numLocations = 20
allocate(lon(numLocations))
allocate(lat(numLocations))

do i=1,numLocations
   lon(i)=360.0*i/numLocations
   lat(i)=100*REAL(localPet,ESMF_KIND_R8)/REAL(petCount,ESMF_KIND_R8)-50.0
enddo

!------------------------------------------------------------------
! Allocate and set example Field data
!------------------------------------------------------------------
allocate(temperature(numLocations))

do i=1,numLocations
   temperature(i)= 300 - abs(lat(i))
enddo

!------------------------------------------------------------------
! Create the LocStream:  Allocate space for the LocStream object,
! define the number and distribution of the locations.
!------------------------------------------------------------------
locstream=ESMF_LocStreamCreate(name="Temperature Measurements",   &
                               localCount=numLocations, &
                               coordSys=ESMF_COORDSYS_SPH_DEG,   &
                               rc=rc)
```

```
!-------------------------------------------------------------------
! Add key data, referencing a user data pointer. By changing the
! datacopyflag to ESMF_DATACOPY_VALUE an internally allocated copy of the
! user data may also be set.
!-------------------------------------------------------------------
call ESMF_LocStreamAddKey(locstream,              &
                          keyName="ESMF:Lat",     &
                          farray=lat,             &
                          datacopyflag=ESMF_DATACOPY_REFERENCE, &
                          keyUnits="Degrees",     &
                          keyLongName="Latitude", rc=rc)


call ESMF_LocStreamAddKey(locstream,              &
                          keyName="ESMF:Lon",     &
                          farray=lon,             &
                          datacopyflag=ESMF_DATACOPY_REFERENCE, &
                          keyUnits="Degrees",     &
                          keyLongName="Longitude", rc=rc)



!-------------------------------------------------------------------
! Create a Field on the Location Stream. In this case the
! Field is created from a user array, but any of the other
! Field create methods (e.g. from ArraySpec) would also apply.
!-------------------------------------------------------------------
field_temperature=ESMF_FieldCreate(locstream,   &
                                   temperature, &
                                   name="temperature", &
                                   rc=rc)
```

33.3.2 Create a LocStream with internally allocated memory

The following is an example of creating a LocStream object. After creation, key data is internally allocated, the pointer is retrieved, and the data is set. A Field is also created on the LocStream to hold data (temperature) at each location.

```
!-------------------------------------------------------------------
! Get parallel information. Here petCount is the total number of
! running PETs, and localPet is the number of this particular PET.
!-------------------------------------------------------------------
call ESMF_VMGet(vm, localPet=localPet, petCount=petCount, rc=rc)


numLocations = 20

!-------------------------------------------------------------------
! Create the LocStream:  Allocate space for the LocStream object,
! define the number and distribution of the locations.
!-------------------------------------------------------------------
```

```
locstream=ESMF_LocStreamCreate(name="Temperature Measurements",   &
                               localCount=numLocations, &
                               coordSys=ESMF_COORDSYS_SPH_DEG,   &
                               rc=rc)



!-----------------------------------------------------------------
! Add key data (internally allocating memory).
!-----------------------------------------------------------------
call ESMF_LocStreamAddKey(locstream,                    &
                          keyName="ESMF:Lat",           &
                          KeyTypeKind=ESMF_TYPEKIND_R8, &
                          keyUnits="Degrees",           &
                          keyLongName="Latitude", rc=rc)


call ESMF_LocStreamAddKey(locstream,                    &
                          keyName="ESMF:Lon",           &
                          KeyTypeKind=ESMF_TYPEKIND_R8, &
                          keyUnits="Degrees",           &
                          keyLongName="Longitude", rc=rc)



!-----------------------------------------------------------------
! Get key data.
!-----------------------------------------------------------------
call ESMF_LocStreamGetKey(locstream,                    &
                          keyName="ESMF:Lat",           &
                          farray=lat,                   &
                          rc=rc)


call ESMF_LocStreamGetKey(locstream,                    &
                          keyName="ESMF:Lon",           &
                          farray=lon,                   &
                          rc=rc)


!-----------------------------------------------------------------
! Set example location information. Locations on a PET are wrapped
! around sphere. Each PET occupies a different latitude ranging
! from +50.0 to -50.0.
!-----------------------------------------------------------------
do i=1,numLocations
   lon(i)=360.0*i/numLocations
   lat(i)=100*REAL(localPet,ESMF_KIND_R8)/REAL(petCount,ESMF_KIND_R8)-50.0
enddo


!-----------------------------------------------------------------
! Allocate and set example Field data
```

```
!-----------------------------------------------------------------
allocate(temperature(numLocations))
do i=1,numLocations
   temperature(i)= 300 - abs(lat(i))
enddo

!-----------------------------------------------------------------
! Create a Field on the Location Stream. In this case the
! Field is created from a user array, but any of the other
! Field create methods (e.g. from ArraySpec) would also apply.
!-----------------------------------------------------------------
field_temperature=ESMF_FieldCreate(locstream,   &
                            temperature, &
                            name="temperature", &
                            rc=rc)
```

33.3.3 Create a LocStream with a distribution based on a Grid

The following is an example of using the LocStream create from background Grid capability. Using this capability, the newly created LocStream is a copy of the old LocStream, but with a new distribution. The new LocStream is distributed such that if the coordinates of a location in the LocStream lie within a Grid cell, then that location is put on the same PET as the Grid cell.

```
!-----------------------------------------------------------------
! Get parallel information. Here petCount is the total number of
! running PETs, and localPet is the number of this particular PET.
!-----------------------------------------------------------------
call ESMF_VMGet(vm, localPet=localPet, petCount=petCount, rc=rc)


!-----------------------------------------------------------------
! Create the LocStream:  Allocate space for the LocStream object,
! define the number and distribution of the locations.
!-----------------------------------------------------------------
numLocations = 20
locstream=ESMF_LocStreamCreate(name="Temperature Measurements",   &
                             localCount=numLocations, &
                             coordSys=ESMF_COORDSYS_SPH_DEG,   &
                             rc=rc)


!-----------------------------------------------------------------
! Add key data (internally allocating memory).
!-----------------------------------------------------------------
call ESMF_LocStreamAddKey(locstream,                    &
                         keyName="ESMF:Lon",            &
                         KeyTypeKind=ESMF_TYPEKIND_R8,  &
                         keyUnits="Degrees",            &
                         keyLongName="Longitude", rc=rc)
```

```
call ESMF_LocStreamAddKey(locstream,                    &
                          keyName="ESMF:Lat",           &
                          KeyTypeKind=ESMF_TYPEKIND_R8, &
                          keyUnits="Degrees",           &
                          keyLongName="Latitude", rc=rc)




!-----------------------------------------------------------------
! Get Fortran arrays which hold the key data, so that it can be set.
!-----------------------------------------------------------------
call ESMF_LocStreamGetKey(locstream,                    &
                          keyName="ESMF:Lon",           &
                          farray=lon,                   &
                          rc=rc)


call ESMF_LocStreamGetKey(locstream,                    &
                          keyName="ESMF:Lat",           &
                          farray=lat,                   &
                          rc=rc)



!-----------------------------------------------------------------
! Set example location information. Locations on a PET are wrapped
! around sphere. Each PET occupies a different latitude ranging
! from +50.0 to -50.0.
!-----------------------------------------------------------------
do i=1,numLocations
   lon(i)=360.0*i/numLocations
   lat(i)=100*REAL(localPet,ESMF_KIND_R8)/REAL(petCount,ESMF_KIND_R8)-50.0
enddo

!-----------------------------------------------------------------
! Create a Grid to use as the background. The Grid is
! GridLonSize by GridLatSize with the default distribution
! (The first dimension split across the PETs). The coordinate range
! is  0 to 360 in longitude and -90 to 90 in latitude. Note that we
! use indexflag=ESMF_INDEX_GLOBAL for the Grid creation. At this time
! this is required for a Grid to be usable as a background Grid.
! Note that here the points are treated as cartesian.
!-----------------------------------------------------------------
grid=ESMF_GridCreateNoPeriDim(maxIndex=(/GridLonSize,GridLatSize/), &
                              coordSys=ESMF_COORDSYS_SPH_DEG,       &
                              indexflag=ESMF_INDEX_GLOBAL,          &
                              rc=rc)


!-----------------------------------------------------------------
! Allocate the corner stagger location in which to put the coordinates.
! (The corner stagger must be used for the Grid to be usable as a
```

```
!  background Grid.)
!-------------------------------------------------------------------
call ESMF_GridAddCoord(grid, staggerloc=ESMF_STAGGERLOC_CORNER, rc=rc)



!-------------------------------------------------------------------
! Get access to the Fortran array pointers that hold the Grid
! coordinate information and then set the coordinates to be uniformly
! distributed around the globe.
!-------------------------------------------------------------------
call ESMF_GridGetCoord(grid,                                      &
                       staggerLoc=ESMF_STAGGERLOC_CORNER,         &
                       coordDim=1, computationalLBound=clbnd,     &
                       computationalUBound=cubnd,                 &
                       farrayPtr=farrayPtrLonC, rc=rc)



call ESMF_GridGetCoord(grid,                                      &
                      staggerLoc=ESMF_STAGGERLOC_CORNER,          &
                       coordDim=2, farrayPtr=farrayPtrLatC, rc=rc)



do i1=clbnd(1),cubnd(1)
do i2=clbnd(2),cubnd(2)
   ! Set Grid longitude coordinates as 0 to 360
   farrayPtrLonC(i1,i2) = REAL(i1-1)*360.0/REAL(GridLonSize)

   ! Set Grid latitude coordinates as -90 to 90
   farrayPtrLatC(i1,i2) = -90. + REAL(i2-1)*180.0/REAL(GridLatSize) + &
                                 0.5*180.0/REAL(GridLatSize)
enddo
enddo


!-------------------------------------------------------------------
! Create newLocstream on the background Grid using the
! "Lon" and "Lat" keys as the coordinates for the entries in
! locstream. The entries in newLocstream with coordinates (lon,lat)
! are on the same PET as the piece of grid which contains (lon,lat).
!-------------------------------------------------------------------
newLocstream=ESMF_LocStreamCreate(locstream, &
               background=grid, rc=rc)


!-------------------------------------------------------------------
! A Field can now be created on newLocstream and
! ESMF_FieldRedist() can be used to move data between Fields built
! on locstream and Fields built on newLocstream.
!-------------------------------------------------------------------
```

33.3.4 Regridding from a Grid to a LocStream

The following is an example of how a LocStream object can be used in regridding.

```
!-----------------------------------------------------------------
! Create a global Grid to use as the regridding source. The Grid is
! GridLonSize by GridLatSize with the default distribution
! (The first dimension split across the PETs). The coordinate range
! is  0 to 360 in longitude and -90 to 90 in latitude. Note that we
! use indexflag=ESMF_INDEX_GLOBAL for the Grid creation to calculate
! coordinates across PETs.
!-----------------------------------------------------------------
grid=ESMF_GridCreate1PeriDim(maxIndex=(/GridLonSize,GridLatSize/), &
                             coordSys=ESMF_COORDSYS_SPH_DEG,       &
                             indexflag=ESMF_INDEX_GLOBAL,          &
                             rc=rc)

!-----------------------------------------------------------------
! Allocate the center stagger location in which to put the coordinates.
!-----------------------------------------------------------------
call ESMF_GridAddCoord(grid, staggerloc=ESMF_STAGGERLOC_CENTER, rc=rc)

!-----------------------------------------------------------------
! Get access to the Fortran array pointers that hold the Grid
! coordinate information.
!-----------------------------------------------------------------
! Longitudes
call ESMF_GridGetCoord(grid,                                    &
                       staggerLoc=ESMF_STAGGERLOC_CENTER,       &
                       coordDim=1, computationalLBound=clbnd,   &
                       computationalUBound=cubnd,               &
                       farrayPtr=farrayPtrLonC, rc=rc)

! Latitudes
call ESMF_GridGetCoord(grid,                                    &
                       staggerLoc=ESMF_STAGGERLOC_CENTER,       &
                       coordDim=2, computationalLBound=clbnd,   &
                       computationalUBound=cubnd,               &
                       farrayPtr=farrayPtrLatC, rc=rc)


!-----------------------------------------------------------------
! Create a source Field to hold the data to be regridded to the
! destination
!-----------------------------------------------------------------
srcField = ESMF_FieldCreate(grid, typekind=ESMF_TYPEKIND_R8,   &
                            staggerloc=ESMF_STAGGERLOC_CENTER, &
                            name="source", rc=rc)

!-----------------------------------------------------------------
! Set the Grid coordinates to be uniformly distributed around the globe.
!-----------------------------------------------------------------
do i1=clbnd(1),cubnd(1)
```

```
do i2=clbnd(2),cubnd(2)
   ! Set Grid longitude coordinates as 0 to 360
   farrayPtrLonC(i1,i2) = REAL(i1-1)*360.0/REAL(GridLonSize)

   ! Set Grid latitude coordinates as -90 to 90
   farrayPtrLatC(i1,i2) = -90. + REAL(i2-1)*180.0/REAL(GridLatSize) + &
                                  0.5*180.0/REAL(GridLatSize)


enddo
enddo

!-------------------------------------------------------------------
! Set the number of points the destination LocStream will have
! depending on the PET.
!-------------------------------------------------------------------
if (petCount .eq. 1) then
  numLocationsOnThisPet=7
else
  if (localpet .eq. 0) then
    numLocationsOnThisPet=2
  else if (localpet .eq. 1) then
    numLocationsOnThisPet=2
  else if (localpet .eq. 2) then
    numLocationsOnThisPet=2
  else if (localpet .eq. 3) then
    numLocationsOnThisPet=1
  endif
endif

!-------------------------------------------------------------------
! Create the LocStream:  Allocate space for the LocStream object,
! define the number of locations on this PET.
!-------------------------------------------------------------------
locstream=ESMF_LocStreamCreate(name="Test Data",                 &
                               localCount=numLocationsOnThisPet, &
                               coordSys=ESMF_COORDSYS_SPH_DEG,   &
                               rc=rc)


!-------------------------------------------------------------------
! Add key data to LocStream(internally allocating memory).
!-------------------------------------------------------------------
call ESMF_LocStreamAddKey(locstream,                    &
                          keyName="ESMF:Lat",           &
                          KeyTypeKind=ESMF_TYPEKIND_R8, &
                          keyUnits="degrees",           &
                          keyLongName="Latitude", rc=rc)

call ESMF_LocStreamAddKey(locstream,                    &
                          keyName="ESMF:Lon",           &
                          KeyTypeKind=ESMF_TYPEKIND_R8, &
                          keyUnits="degrees",           &
                          keyLongName="Longitude", rc=rc)

!-------------------------------------------------------------------
```

```
! Get access to the Fortran array pointers that hold the key data.
!-------------------------------------------------------------------
! Longitudes
call ESMF_LocStreamGetKey(locstream,           &
                          keyName="ESMF:Lon",  &
                          farray=lonArray,     &
                          rc=rc)

! Latitudes
call ESMF_LocStreamGetKey(locstream,           &
                          keyName="ESMF:Lat",  &
                          farray=latArray,     &
                          rc=rc)


!-------------------------------------------------------------------
! Set coordinates in key arrays depending on the PET.
! For this example use an arbitrary set of points around globe.
!-------------------------------------------------------------------
if (petCount .eq. 1) then
  latArray = (/-87.75, -56.25, -26.5, 0.0, 26.5, 56.25, 87.75 /)
  lonArray = (/51.4, 102.8, 154.2, 205.6, 257.0, 308.4, 359.8 /)
else
  if (localpet .eq. 0) then
    latArray = (/ -87.75, -56.25 /)
    lonArray = (/ 51.4, 102.8 /)
  else if (localpet .eq.1) then
    latArray = (/ -26.5, 0.0 /)
    lonArray = (/ 154.2, 205.6 /)
  else if (localpet .eq.2) then
    latArray = (/ 26.5, 56.25 /)
    lonArray = (/ 257.0, 308.4 /)
  else if (localpet .eq.3) then
    latArray = (/ 87.75 /)
    lonArray = (/ 359.8 /)
  endif
endif

!-------------------------------------------------------------------
! Create the destination Field on the LocStream to hold the
! result of the regridding.
!-------------------------------------------------------------------
dstField = ESMF_FieldCreate(locstream, typekind=ESMF_TYPEKIND_R8, &
                            name="dest", rc=rc)


!-------------------------------------------------------------------
! Calculate the RouteHandle that represents the regridding from
! the source to destination Field using the Bilinear regridding method.
!-------------------------------------------------------------------
call ESMF_FieldRegridStore( srcField=srcField,                      &
                            dstField=dstField,                      &
                            routeHandle=routeHandle,                &
                            regridmethod=ESMF_REGRIDMETHOD_BILINEAR, &
                            rc=rc)
```

```
!-------------------------------------------------------------------
! Regrid from srcField to dstField
!-------------------------------------------------------------------
! Can loop here regridding from srcField to dstField as src data changes
! do i=1,...

     ! (Put data into srcField)

     !-----------------------------------------------------------------
     ! Use the RouteHandle to regrid data from srcField to dstField.
     !-----------------------------------------------------------------
     call ESMF_FieldRegrid(srcField, dstField, routeHandle, rc=rc)

     ! (Can now use the data in dstField)

! enddo


!-------------------------------------------------------------------
! Now that we are done, release the RouteHandle freeing its memory.
!-------------------------------------------------------------------
call ESMF_FieldRegridRelease(routeHandle, rc=rc)
```

33.4 Class API

33.4.1 ESMF_LocStreamAssignment(=) - LocStream assignment

INTERFACE:

```
interface assignment(=)
locstream1 = locstream2
```

ARGUMENTS:

```
type(ESMF_LocStream) :: locstream1
type(ESMF_LocStream) :: locstream2
```

STATUS:

- This interface is backward compatible with ESMF versions starting at 5.2.0r. If code using this interface compiles with any version of ESMF starting with 5.2.0r, then it will compile with the current version.

DESCRIPTION:

Assign locstream1 as an alias to the same ESMF LocStream object in memory as locstream2. If locstream2 is invalid, then locstream1 will be equally invalid after the assignment.

The arguments are:

locstream1 The `ESMF_LocStream` object on the left hand side of the assignment.

locstream2 The `ESMF_LocStream` object on the right hand side of the assignment.

33.4.2 ESMF_LocStreamOperator(==) - LocStream equality operator

INTERFACE:

```
interface operator(==)
  if (locstream1 == locstream2) then ... endif
            OR
  result = (locstream1 == locstream2)
```

RETURN VALUE:

```
logical :: result
```

ARGUMENTS:

```
type(ESMF_LocStream), intent(in) :: locstream1
type(ESMF_LocStream), intent(in) :: locstream2
```

STATUS:

- This interface is backward compatible with ESMF versions starting at 5.2.0r. If code using this interface compiles with any version of ESMF starting with 5.2.0r, then it will compile with the current version.

DESCRIPTION:

Test whether locstream1 and locstream2 are valid aliases to the same ESMF LocStream object in memory. For a more general comparison of two ESMF LocStreams, going beyond the simple alias test, the ESMF_LocStreamMatch() function (not yet implemented) must be used.

The arguments are:

locstream1 The `ESMF_LocStream` object on the left hand side of the equality operation.

locstream2 The `ESMF_LocStream` object on the right hand side of the equality operation.

33.4.3 ESMF_LocStreamOperator(/=) - LocStream not equal operator

INTERFACE:

```
interface operator(/=)
  if (locstream1 /= locstream2) then ... endif
            OR
  result = (locstream1 /= locstream2)
```

RETURN VALUE:

```
logical :: result
```

ARGUMENTS:

```
type(ESMF_LocStream), intent(in) :: locstream1
type(ESMF_LocStream), intent(in) :: locstream2
```

STATUS:

- This interface is backward compatible with ESMF versions starting at 5.2.0r. If code using this interface compiles with any version of ESMF starting with 5.2.0r, then it will compile with the current version.

DESCRIPTION:

Test whether locstream1 and locstream2 are *not* valid aliases to the same ESMF LocStream object in memory. For a more general comparison of two ESMF LocStreams, going beyond the simple alias test, the ESMF_LocStreamMatch() function (not yet implemented) must be used.

The arguments are:

locstream1 The `ESMF_LocStream` object on the left hand side of the non-equality operation.

locstream2 The `ESMF_LocStream` object on the right hand side of the non-equality operation.

33.4.4 ESMF_LocStreamAddKey - Add a key Array and allocate the internal memory

INTERFACE:

```
! Private name; call using ESMF_LocStreamAddKey()
subroutine ESMF_LocStreamAddKeyAlloc(locstream, keyName, &
             keyTypeKind, keyUnits, keyLongName, rc)
```

ARGUMENTS:

```
    type(ESMF_Locstream),     intent(in)            :: locstream
    character (len=*),        intent(in)            :: keyName
-- The following arguments require argument keyword syntax (e.g. rc=rc). --
    type(ESMF_TypeKind_Flag), intent(in),  optional :: keyTypeKind
    character (len=*),        intent(in),  optional :: keyUnits
    character (len=*),        intent(in),  optional :: keyLongName
    integer,                  intent(out), optional :: rc
```

DESCRIPTION:

Add a key to a locstream with a required keyName. Once a key has been added, a pointer to its internally allocated memory can be retrieved and used to set key values.

The arguments are:

locstream The `ESMF_LocStream` object to add key to.

keyName The name of the key to add.

[keyTypeKind] The type/kind of the key data. If not specified then the type/kind will default to 8 byte reals.

[keyUnits] The units of the key data. If not specified, then the item remains blank.

[keyLongName] The long name of the key data. If not specified, then the item remains blank.

[rc] Return code; equals `ESMF_SUCCESS` if there are no errors.

33.4.5 ESMF_LocStreamAddKey - Add a key Array

INTERFACE:

```
! Private name; call using ESMF_LocStreamAddKey()
subroutine ESMF_LocStreamAddKeyArray(locstream, keyName, keyArray, &
             destroyKey, keyUnits, keyLongName, rc)
```

ARGUMENTS:

```
     type(ESMF_Locstream), intent(in)             :: locstream
     character (len=*),    intent(in)             :: keyName
     type(ESMF_Array),     intent(in)             :: keyArray
 -- The following arguments require argument keyword syntax (e.g. rc=rc). --
     logical,              intent(in),  optional  :: destroyKey
     character (len=*),    intent(in),  optional  :: keyUnits
     character (len=*),    intent(in),  optional  :: keyLongName
     integer,              intent(out), optional  :: rc
```

DESCRIPTION:

Add a key to a locstream with a required keyName and a required `ESMF_Array`. The user is responsible for the creation of the `ESMF_Array` that will hold the key values.

The arguments are:

locstream The `ESMF_LocStream` object to add key to.

keyName The name of the key to add.

keyArray An ESMF Array which contains the key data

[destroyKey] if .true. destroy this key array when the locstream is destroyed. Defaults to .false.

[keyUnits] The units of the key data. If not specified, then the item remains blank.

[keyLongName] The long name of the key data. If not specified, then the item remains blank.

[rc] Return code; equals `ESMF_SUCCESS` if there are no errors.

33.4.6 ESMF_LocStreamAddKey - Add a key Array created around user memory

INTERFACE:

```
! Private name; call using ESMF_LocStreamAddKey()
 subroutine ESMF_LocStreamAddKeyI4(locstream, keyName, farray, &
             datacopyflag, keyUnits, keyLongName, rc)
```

ARGUMENTS:

```
      type(ESMF_Locstream), intent(in) :: locstream
      character (len=*), intent(in) :: keyName
      <farray>
 -- The following arguments require argument keyword syntax (e.g. rc=rc). --
      type(ESMF_DataCopy_Flag), intent(in), optional :: datacopyflag
      character (len=*), intent(in), optional :: keyUnits
      character (len=*), intent(in), optional :: keyLongName
      integer, intent(out), optional :: rc
```

DESCRIPTION:

Add a key to a locstream with a required keyName and a required Fortran array. The user is responsible for the creation of the Fortran array that will hold the key values, including the maintenance of any allocated memory.

Supported values for <farray> are:

integer(ESMF_KIND_I4), intent(in) :: farray(:)

real(ESMF_KIND_R4), intent(in) :: farray(:)

real(ESMF_KIND_R8), intent(in) :: farray(:)

The arguments are:

locstream The `ESMF_LocStream` object to add key to.

keyName The name of the key to add.

farray Valid native Fortran array, i.e. memory must be associated with the actual argument. The type/kind/rank information of `farray` will be used to set the key Array's properties accordingly.

[datacopyflag] Specifies whether the Array object will reference the memory allocation provided by `farray` directly or will copy the data from `farray` into a new memory allocation. Valid options are ! `ESMF_DATACOPY_REFERENCE` (default) or `ESMF_DATACOPY_VALUE`. Depending on the specific situation the `ESMF_DATACOPY_REFERENCE` option may be unsafe when specifying an array slice for `farray`.

[keyUnits] The units of the key data. If not specified, then the item remains blank.

[keyLongName] The long name of the key data. If not specified, then the item remains blank.

[rc] Return code; equals `ESMF_SUCCESS` if there are no errors.

33.4.7 ESMF_LocStreamCreate - Create a new LocStream by projecting onto a Grid

INTERFACE:

```
! Private name; call using ESMF_LocStreamCreate()
function ESMF_LocStreamCreateByBkgGrid(locstream, &
           background, maskValues, &
           unmappedaction, name, rc)
```

RETURN VALUE:

```
type(ESMF_LocStream) :: ESMF_LocStreamCreateByBkgGrid
```

ARGUMENTS:

```
   type(ESMF_LocStream),           intent(in)            :: locstream
   type(ESMF_Grid),                intent(in)            :: background
-- The following arguments require argument keyword syntax (e.g. rc=rc). --
   integer(ESMF_KIND_I4),          intent(in),  optional :: maskValues(:)
   type(ESMF_UnmappedAction_Flag), intent(in),  optional :: unmappedaction
   character (len=*),              intent(in),  optional :: name
   integer,                        intent(out), optional :: rc
```

DESCRIPTION:

Create an location stream from an existing one in accordance with the distribution of the background Grid. The entries in the new location stream are redistributed, so that they lie on the same PET as the piece of Grid which contains the coordinates of the entries. The coordinates of the entries are the data in the keys named ESMF:Lon, ESMF:Lat, ESMF:Radius in the case of a spherical system and ESMF:X, ESMF:Y, ESMF:Z for cartesian. To copy data in Fields or FieldBundles built on `locstream` to the new one simply use `ESMF_FieldRedist()` or `ESMF_FieldBundleRedist()`.

The arguments are:

locstream Location stream from which the new location stream is to be created

background Background Grid which determines the distribution of the entries in the new location stream. The background Grid Note also that this subroutine uses the corner stagger location in the Grid for determining where a point lies, because this is the stagger location which fully contains the cell. A Grid must have coordinate data in this stagger location to be used in this subroutine. For a 2D Grid this stagger location is ESMF_STAGGERLOC_CORNER for a 3D Grid this stagger location is ESMF_STAGGERLOC_CORNER_VFACE. Note that currently the background Grid also needs to have been created with indexflag=ESMF_INDEX_GLOBAL to be usable here.

[maskValues] List of values that indicate a background grid point should be masked out. If not specified, no masking will occur.

[unmappedaction] Specifies what should happen if there are destination points that can't be mapped to a source cell. Please see Section 55.62 for a list of valid options. If not specified, `unmappedaction` defaults to `ESMF_UNMAPPEDACTION_ERROR`. [NOTE: the `unmappedaction=ESMF_UNMAPPEDACTION_IGNORE` option is currently not implemented.]

[name] Name of the resulting location stream

[rc] Return code; equals `ESMF_SUCCESS` if there are no errors.

33.4.8 ESMF_LocStreamCreate - Create a new LocStream by projecting onto a Mesh

INTERFACE:

```
! Private name; call using ESMF_LocStreamCreate()
function ESMF_LocStreamCreateByBkgMesh(locstream, &
           background, unmappedaction, name, rc)
```

RETURN VALUE:

```
type(ESMF_LocStream) :: ESMF_LocStreamCreateByBkgMesh
```

ARGUMENTS:

```
      type(ESMF_LocStream),           intent(in)           :: locstream
      type(ESMF_Mesh),                intent(in)           :: background
 -- The following arguments require argument keyword syntax (e.g. rc=rc). --
      type(ESMF_UnmappedAction_Flag), intent(in), optional :: unmappedaction
      character (len=*),              intent(in), optional :: name
      integer,                        intent(out),optional :: rc
```

DESCRIPTION:

Create an location stream from an existing one in accordance with the distribution of the background Mesh. The entries in the new location stream are redistributed, so that they lie on the same PET as the piece of Mesh which contains the coordinates of the entries. The coordinates of the entries are the data in the keys named ESMF:Lon, ESMF:Lat, ESMF:Radius in the case of a spherical system and ESMF:X, ESMF:Y, ESMF:Z for cartesian. To copy data in Fields or FieldBundles built on `locstream` to the new one simply use `ESMF_FieldRedist()` or `ESMF_FieldBundleRedist()`.

The arguments are:

locstream Location stream from which the new location stream is to be created

background Background Mesh which determines the distribution of entries in the new locatiion stream.

[unmappedaction] Specifies what should happen if there are destination points that can't be mapped to a source cell. Please see Section 55.62 for a list of valid options. If not specified, `unmappedaction` defaults to `ESMF_UNMAPPEDACTION_ERROR`. [NOTE: the `unmappedaction=ESMF_UNMAPPEDACTION_IGNORE` option is currently not implemented.]

[name] Name of the resulting location stream

[rc] Return code; equals `ESMF_SUCCESS` if there are no errors.

33.4.9 ESMF_LocStreamCreate - Create a new LocStream from a distgrid

INTERFACE:

```
! Private name: call using ESMF_LocStreamCreate()
function ESMF_LocStreamCreateFromDG(distgrid, &
  indexflag, coordSys, name, vm, rc )
```

RETURN VALUE:

```
type(ESMF_LocStream) :: ESMF_LocStreamCreateFromDG
```

ARGUMENTS:

```
      type(ESMF_DistGrid),      intent(in)            :: distgrid
 -- The following arguments require argument keyword syntax (e.g. rc=rc). --
      type(ESMF_Index_Flag),    intent(in),  optional :: indexflag
      type(ESMF_CoordSys_Flag), intent(in),  optional :: coordSys
      character (len=*),        intent(in),  optional :: name
      type(ESMF_VM),            intent(in),  optional :: vm
      integer,                  intent(out), optional :: rc
```

DESCRIPTION:

Allocates memory for a new `ESMF_LocStream` object, constructs its internal derived types.

The arguments are:

distgrid Distgrid specifying size and distribution. Only 1D distgrids are allowed.

[indexflag] Flag that indicates how the DE-local indices are to be defined. Defaults to `ESMF_INDEX_DELOCAL`, which indicates that the index range on each DE starts at 1. See Section 55.29 for the full range of options.

[coordSys] The coordinate system of the location stream coordinate data. For a full list of options, please see Section 55.11. If not specified then defaults to ESMF_COORDSYS_SPH_DEG.

[name] Name of the location stream

[vm] If present, the LocStream object is created on the specified `ESMF_VM` object. The default is to create on the VM of the current context.

[rc] Return code; equals `ESMF_SUCCESS` if there are no errors.

33.4.10 ESMF_LocStreamCreate - Create a new LocStream from an irregular distribution

INTERFACE:

```
! Private name: call using ESMF_LocStreamCreate()
function ESMF_LocStreamCreateIrreg(minIndex, countsPerDE, &
            indexflag, coordSys, name, rc)
```

RETURN VALUE:

```
type(ESMF_LocStream) :: ESMF_LocStreamCreateIrreg
```

ARGUMENTS:

```
      integer, intent(in), optional                   :: minIndex
      integer, intent(in)                             :: countsPerDE(:)
 -- The following arguments require argument keyword syntax (e.g. rc=rc). --
      type(ESMF_Index_Flag), intent(in), optional     :: indexflag
      type(ESMF_CoordSys_Flag), intent(in),  optional :: coordSys
      character (len=*), intent(in), optional         :: name
      integer, intent(out), optional                  :: rc
```

DESCRIPTION:

Allocates memory for a new `ESMF_LocStream` object, constructs its internal derived types. The `ESMF_DistGrid` is set up, indicating how the LocStream is distributed.

The arguments are:

[minIndex] If indexflag=`ESMF_INDEX_DELOCAL`, this setting is used to indicate the number to start the index ranges at. If not present, defaults to 1.

countsPerDE This array has an element for each DE, specifying the number of locations for that DE.

[indexflag] Flag that indicates how the DE-local indices are to be defined. Defaults to `ESMF_INDEX_DELOCAL`, which indicates that the index range on each DE starts at 1. See Section 55.29 for the full range of options.

[coordSys] The coordinate system of the location stream coordinate data. For a full list of options, please see Section 55.11. If not specified then defaults to ESMF_COORDSYS_SPH_DEG.

[name] Name of the location stream

[rc] Return code; equals `ESMF_SUCCESS` if there are no errors.

33.4.11 ESMF_LocStreamCreate - Create a new LocStream from a local count

INTERFACE:

```
! Private name: call using ESMF_LocStreamCreate()
function ESMF_LocStreamCreateFromLocal(localCount, &
            indexflag, coordSys, name, rc)
```

RETURN VALUE:

```
type(ESMF_LocStream) :: ESMF_LocStreamCreateFromLocal
```

ARGUMENTS:

```
      integer, intent(in)                            :: localCount
 -- The following arguments require argument keyword syntax (e.g. rc=rc). --
      type(ESMF_Index_Flag), intent(in), optional     :: indexflag
      type(ESMF_CoordSys_Flag), intent(in),  optional :: coordSys
      character (len=*), intent(in), optional         :: name
      integer, intent(out), optional                  :: rc
```

DESCRIPTION:

Allocates memory for a new `ESMF_LocStream` object, constructs its internal derived types. The `ESMF_DistGrid` is set up, indicating how the LocStream is distributed. The assumed layout is one DE per PET.

The arguments are:

localCount Number of grid cells to be distributed to this DE/PET.

[indexflag] Flag that indicates how the DE-local indices are to be defined. Defaults to `ESMF_INDEX_DELOCAL`, which indicates that the index range on each DE starts at 1. See Section 55.29 for the full range of options.

[coordSys] The coordinate system of the location stream coordinate data. For a full list of options, please see Section 55.11. If not specified then defaults to ESMF_COORDSYS_SPH_DEG.

[name] Name of the location stream

[rc] Return code; equals `ESMF_SUCCESS` if there are no errors.

33.4.12 ESMF_LocStreamCreate - Create a new LocStream from an old one and a distgrid

INTERFACE:

```
! Private name: call using ESMF_LocStreamCreate()
function ESMF_LocStreamCreateFromNewDG(locstream, distgrid, &
     name, rc)
```

RETURN VALUE:

```
type(ESMF_LocStream) :: ESMF_LocStreamCreateFromNewDG
```

ARGUMENTS:

```
      type(ESMF_LocStream), intent(in)                :: locstream
      type(ESMF_DistGrid),  intent(in)                :: distgrid
 -- The following arguments require argument keyword syntax (e.g. rc=rc). --
      character (len=*),    intent(in), optional      :: name
      integer,              intent(out), optional     :: rc
```

DESCRIPTION:

Create a new location stream that is a copy of an old one, but with a new distribution. The new distribution is given by a distgrid passed into the call. Key and other class information is copied from the old locstream to the new one. Information contained in Fields build on the location streams can be copied over by using the Field redistribution calls (e.g. `ESMF_FieldRedistStore()` and `ESMF_FieldRedist()`).

The arguments are:

locstream Location stream from which the new location stream is to be created

distgrid Distgrid for new distgrid

[name] Name of the resulting location stream

[rc] Return code; equals `ESMF_SUCCESS` if there are no errors.

33.4.13 ESMF_LocStreamCreate - Create a new LocStream using a regular distribution

INTERFACE:

```
      ! Private name: call using ESMF_LocStreamCreate()
      function ESMF_LocStreamCreateReg(regDecomp, decompFlag, &
                   minIndex, maxIndex, &
                   coordSys, indexflag, name, rc)
```

RETURN VALUE:

```
      type(ESMF_LocStream) :: ESMF_LocStreamCreateReg
```

ARGUMENTS:

```
      integer,                  intent(in),  optional  :: regDecomp
      type(ESMF_Decomp_Flag),   intent(in),  optional  :: decompflag
      integer,                  intent(in),  optional  :: minIndex
      integer,                  intent(in)             :: maxIndex
 -- The following arguments require argument keyword syntax (e.g. rc=rc). --
      type(ESMF_CoordSys_Flag), intent(in),  optional  :: coordSys
      type(ESMF_Index_Flag),    intent(in),  optional  :: indexflag
      character (len=*),        intent(in),  optional  :: name
      integer,                  intent(out), optional  :: rc
```

DESCRIPTION:

Allocates memory for a new `ESMF_LocStream` object, constructs its internal derived types. The `ESMF_DistGrid` is set up, indicating how the LocStream is distributed.

The arguments are:

[regDecomp] Specify into how many chunks to divide the locations. If not specified, defaults to the number of PETs.

[decompFlag] Specify what to do with leftover locations after division. If not specified, defaults to `ESMF_DECOMP_BALANCED`. Please see Section 55.14 for a full description of the possible options.

[minIndex] If indexflag=`ESMF_INDEX_DELOCAL`, this setting is used to indicate the number to start the index ranges at. If not present, defaults to 1.

maxIndex The maximum index across all PETs.

[coordSys] The coordinate system of the location stream coordinate data. For a full list of options, please see Section 55.11. If not specified then defaults to ESMF_COORDSYS_SPH_DEG.

[indexflag] Flag that indicates how the DE-local indices are to be defined. Defaults to `ESMF_INDEX_DELOCAL`, which indicates that the index range on each DE starts at 1. See Section 55.29 for the full range of options.

[name] Name of the location stream

[rc] Return code; equals `ESMF_SUCCESS` if there are no errors.

33.4.14 ESMF_LocStreamCreate - Create a new LocStream from a grid file

INTERFACE:

```
! Private name: call using ESMF_LocStreamCreate()
function ESMF_LocStreamCreateFromFile(filename, &
     fileformat, varname, indexflag, centerflag, name, rc)
```

RETURN VALUE:

```
type(ESMF_LocStream) :: ESMF_LocStreamCreateFromFile
```

ARGUMENTS:

```
      character (len=*),          intent(in)           :: filename
 -- The following arguments require argument keyword syntax (e.g. rc=rc). --
      type(ESMF_FileFormat_Flag), intent(in), optional :: fileformat
      character(len=*),           intent(in), optional :: varname
      type(ESMF_Index_Flag),      intent(in), optional :: indexflag
      logical,                    intent(in), optional :: centerflag
      character (len=*),          intent(in), optional :: name
      integer,                    intent(out),optional :: rc
```

DESCRIPTION:

Create a new `ESMF_LocStream` object and add the coordinate keys and mask key to the LocStream using the coordinates defined in a grid file. Currently, it supports the SCRIP format, the ESMF unstructured grid format and the UGRID format. For a 2D or 3D grid in ESMF or UGRID format, it can construct the LocStream using either the center coordinates or the corner coordinates. For a SCRIP format grid file, the LocStream can only be constructed using the center coordinates. In addition, it supports 1D network topology in UGRID format. When construction a LocStream using a 1D UGRID, it always uses node coordinates (i.e., corner coordinates).

The arguments are:

filename Name of grid file to be used to create the location stream.

[fileformat] The file format. The valid options are `ESMF_FILEFORMAT_SCRIP`, `ESMF_FILEFORMAT_ESMFMESH`, and `ESMF_FILEFORMAT_UGRID`. Please see section 55.20 for a detailed description of the options. If not specified, the default is `ESMF_FILEFORMAT_SCRIP`.

[varname] An optional variable name stored in the UGRID file to be used to generate the mask using the missing value of the data value of this variable. The first two dimensions of the variable has to be the the longitude and the latitude dimension and the mask is derived from the first 2D values of this variable even if this data is 3D, or 4D array. If not specified, no mask is used for a UGRID file.

[indexflag] Flag that indicates how the DE-local indices are to be defined. Defaults to `ESMF_INDEX_DELOCAL`, which indicates that the index range on each DE starts at 1. See Section 55.29 for the full range of options.

[centerflag] Flag that indicates whether to use the center coordinates to construct the location stream. If true, use center coordinates, otherwise, use the corner coordinates. If not specified, use center coordinates as default. For SCRIP files, only center coordinate is supported.

[name] Name of the location stream

[rc] Return code; equals `ESMF_SUCCESS` if there are no errors.

33.4.15 ESMF_LocStreamDestroy - Release resources associated with a LocStream

INTERFACE:

```
      subroutine ESMF_LocStreamDestroy(locstream, noGarbage, rc)
```

ARGUMENTS:

```
      type(ESMF_LocStream), intent(inout)          :: locstream
 -- The following arguments require argument keyword syntax (e.g. rc=rc). --
      logical,              intent(in),   optional :: noGarbage
      integer,              intent(out),  optional :: rc
```

STATUS:

- This interface is backward compatible with ESMF versions starting at 5.2.0r. If code using this interface compiles with any version of ESMF starting with 5.2.0r, then it will compile with the current version.

- This interface was modified since ESMF version 5.2.0r. The fact that code using this interface compiles with the current ESMF version does not guarantee that it compiles with previous versions of this interface. If user code compatibility with version 5.2.0r is desired then care must be taken to limit the use of this interface to features that were available in the 5.2.0r release.
  Changes made after the 5.2.0r release:

  8.1.0 Added argument `noGarbage`. The argument provides a mechanism to override the default garbage collection mechanism when destroying an ESMF object.

DESCRIPTION:

Deallocate an `ESMF_LocStream` object and appropriate internal structures.

The arguments are:

locstream locstream to destroy

[noGarbage] If set to `.TRUE.` the object will be fully destroyed and removed from the ESMF garbage collection system. Note however that under this condition ESMF cannot protect against accessing the destroyed object through dangling aliases – a situation which may lead to hard to debug application crashes.

It is generally recommended to leave the `noGarbage` argument set to `.FALSE.` (the default), and to take advantage of the ESMF garbage collection system which will prevent problems with dangling aliases or incorrect sequences of destroy calls. However this level of support requires that a small remnant of the object is kept in memory past the destroy call. This can lead to an unexpected increase in memory consumption over the course of execution in applications that use temporary ESMF objects. For situations where the repeated creation and destruction of temporary objects leads to memory issues, it is recommended to call with `noGarbage` set to `.TRUE.`, fully removing the entire temporary object from memory.

[rc] Return code; equals `ESMF_SUCCESS` if there are no errors.

33.4.16 ESMF_LocStreamGet - Return object-wide information from a LocStream

INTERFACE:

```
subroutine ESMF_LocStreamGet(locstream, &
     distgrid, keyCount, keyNames, localDECount, indexflag, &
     coordSys, name, rc)
```

ARGUMENTS:

```
     type(ESMF_Locstream),         intent(in)            :: locstream
 -- The following arguments require argument keyword syntax (e.g. rc=rc). --
     type(ESMF_DistGrid),          intent(out), optional :: distgrid
     integer,                      intent(out), optional :: keyCount
     character(len=ESMF_MAXSTR),                optional :: keyNames(:)
     integer,                      intent(out), optional :: localDECount
     type(ESMF_Index_Flag),        intent(out), optional :: indexflag
     type(ESMF_CoordSys_Flag),     intent(out), optional :: coordSys
     character(len=*),             intent(out), optional :: name
     integer,                      intent(out), optional :: rc
```

DESCRIPTION:

Query an `ESMF_LocStream` for various information. All arguments after the `locstream` are optional.

The arguments are:

locstream The `ESMF_LocStream` object to query.

[distgrid] The `ESMF_DistGrid` object that describes

[keyCount] Number of keys in the `locstream`.

[keyNames] The names of the keys in the `locstream`. Keynames should be an array of character strings. The character strings should be of length ESMF_MAXSTR and the array's length should be at least keyCount.

[localDECount] Number of DEs on this PET in the `locstream`.

[indexflag] The indexflag for this indexflag.

[coordSys] The coordinate system for this location stream.

[name] Name of queried item.

[rc] Return code; equals `ESMF_SUCCESS` if there are no errors.

33.4.17 ESMF_LocStreamGetBounds - Get DE-local bounds of a LocStream

INTERFACE:

```
      subroutine ESMF_LocStreamGetBounds(locstream,   &
          localDE, exclusiveLBound, exclusiveUBound, exclusiveCount,   &
          computationalLBound, computationalUBound, computationalCount,&
          rc)
```

ARGUMENTS:

```
      type(ESMF_LocStream),   intent(in) :: locstream
 -- The following arguments require argument keyword syntax (e.g. rc=rc). --
      integer,                intent(in),  optional :: localDE
      integer,                intent(out), optional :: exclusiveLBound
      integer,                intent(out), optional :: exclusiveUBound
      integer,                intent(out), optional :: exclusiveCount
      integer,                intent(out), optional :: computationalLBound
      integer,                intent(out), optional :: computationalUBound
      integer,                intent(out), optional :: computationalCount
      integer, intent(out), optional :: rc
```

DESCRIPTION:

This method gets the bounds of a localDE for a locstream.

The arguments are:

locstream LocStream to get the information from.

localDE The local DE for which information is requested. `[0,..,localDECount-1]`. For `localDECount==1` the `localDE` argument may be omitted, in which case it will default to `localDE=0`.

[exclusiveLBound] Upon return this holds the lower bounds of the exclusive region.

[exclusiveUBound] Upon return this holds the upper bounds of the exclusive region.

[exclusiveCount] ! Upon return this holds the number of items in the exclusive region (i.e. `exclusiveUBound-exclusiveLBound+1`). `exclusiveCount`.

[computationalLBound] Upon return this holds the lower bounds of the computational region.

[computationalUBound] Upon return this holds the upper bounds of the computational region.

[computationalCount] Upon return this holds the number of items in the computational region (i.e. `computationalUBound-computationalLBound+1`). `computationalCount`.

[rc] Return code; equals `ESMF_SUCCESS` if there are no errors.

33.4.18 ESMF_LocStreamGetKey - Get an Array associated with a key

INTERFACE:

```
! Private name; call using ESMF_LocStreamGetKey()
subroutine ESMF_LocStreamGetKeyArray(locstream, keyName, keyArray, &
     rc)
```

ARGUMENTS:

```
     type(ESMF_Locstream), intent(in)            :: locstream
     character (len=*),    intent(in)            :: keyName
     type(ESMF_Array),     intent(out)           :: keyArray
 -- The following arguments require argument keyword syntax (e.g. rc=rc). --
     integer,              intent(out), optional :: rc
```

DESCRIPTION:

Get ESMF Array associated with key.

The arguments are:

locstream The `ESMF_LocStream` object to get key from.

keyName The name of the key to get.

keyArray Array associated with key.

[rc] Return code; equals `ESMF_SUCCESS` if there are no errors.

33.4.19 ESMF_LocStreamGetKey - Get info associated with a key

INTERFACE:

```
! Private name; call using ESMF_LocStreamGetKey()
subroutine ESMF_LocStreamGetKeyInfo(locstream, keyName, &
     keyUnits, keyLongName, typekind, isPresent, rc)
```

ARGUMENTS:

```
     type(ESMF_Locstream),     intent(in)            :: locstream
     character (len=*),        intent(in)            :: keyName
 -- The following arguments require argument keyword syntax (e.g. rc=rc). --
     character (len=*),        intent(out), optional :: keyUnits
     character (len=*),        intent(out), optional :: keyLongName
     type(ESMF_TypeKind_Flag), intent(out), optional :: typekind
     logical,                  intent(out), optional :: isPresent
     integer,                  intent(out), optional :: rc
```

DESCRIPTION:

Get ESMF Array associated with key.

The arguments are:

locstream The `ESMF_LocStream` object to get key from.

keyName The name of the key to get.

[keyUnits] The units of the key data. If not specified, then the item remains blank.

[keyLongName] The long name of the key data. If not specified, then the item remains blank.

[typekind] The typekind of the key data

[isPresent] Whether or not the keyname is present

[rc] Return code; equals `ESMF_SUCCESS` if there are no errors.

33.4.20 ESMF_LocStreamGetKey - Get a DE-local Fortran array pointer to key values

INTERFACE:

```
! Private name; call using ESMF_LocStreamGetKey()
     subroutine ESMF_LocStreamGetKey(locstream, keyName, &
         localDE, exclusiveLBound, exclusiveUBound, exclusiveCount,       &
         computationalLBound, computationalUBound, computationalCount,    &
         totalLBound, totalUBound, totalCount,                            &
         farray, datacopyflag, rc)
```

ARGUMENTS:

```
        type(ESMF_LocStream),   intent(in)            :: locstream
        character (len=*),      intent(in)            :: keyName
 -- The following arguments require argument keyword syntax (e.g. rc=rc). --
        integer,                intent(in),  optional :: localDE
        integer,                intent(out), optional :: exclusiveLBound
        integer,                intent(out), optional :: exclusiveUBound
        integer,                intent(out), optional :: exclusiveCount
        integer,                intent(out), optional :: computationalLBound
        integer,                intent(out), optional :: computationalUBound
        integer,                intent(out), optional :: computationalCount
        integer,                intent(out), optional :: totalLBound
        integer,                intent(out), optional :: totalUBound
        integer,                intent(out), optional :: totalCount
        <farray>
        type(ESMF_DataCopy_Flag), intent(in), optional :: datacopyflag
        integer, intent(out), optional :: rc
```

DESCRIPTION:

This method gets a Fortran pointer to the piece of memory which holds the key data for a particular key on the given local DE. This is useful, for example, for setting the key values in a LocStream, or for reading the values.

Supported values for <farray> are:

integer(ESMF_KIND_I4), pointer :: farray(:)

real(ESMF_KIND_R4), pointer :: farray(:)

real(ESMF_KIND_R8), pointer :: farray(:)

The arguments are:

locstream LocStream to get the information from.

keyName The key to get the information from.

[localDE] The local DE for which information is requested. `[0,..,localDECount-1]`. For `localDECount==1` the `localDE` argument may be omitted, in which case it will default to `localDE=0`.

[exclusiveLBound] Upon return this holds the lower bounds of the exclusive region.

[exclusiveUBound] Upon return this holds the upper bounds of the exclusive region.

[exclusiveCount] Upon return this holds the number of items in the exclusive region (i.e. `exclusiveUBound-exclusiveLBound+1`). `exclusiveCount`.

[computationalLBound] Upon return this holds the lower bounds of the computational region.

[computationalUBound] Upon return this holds the upper bounds of the computational region.

[computationalCount] Upon return this holds the number of items in the computational region (i.e. `computationalUBound-computationalLBound+1`).

[totalLBound] Upon return this holds the lower bounds of the total region.

[totalUBound] Upon return this holds the upper bounds of the total region.

[totalCount] Upon return this holds the number of items in the total region (i.e. `totalUBound-totalLBound+1`).

farray The pointer to the coordinate data.

[datacopyflag] If not specified, default to `ESMF_DATACOPY_REFERENCE`, in this case farray is a reference to the data in the Grid coordinate arrays. Please see Section 55.13 for further description and a list of valid values.

[rc] Return code; equals `ESMF_SUCCESS` if there are no errors.

33.4.21 ESMF_LocStreamIsCreated - Check whether a LocStream object has been created

INTERFACE:

```
function ESMF_LocStreamIsCreated(locstream, rc)
```

RETURN VALUE:

```
logical :: ESMF_LocStreamIsCreated
```

ARGUMENTS:

```
     type(ESMF_LocStream), intent(in)            :: locstream
 -- The following arguments require argument keyword syntax (e.g. rc=rc). --
     integer,             intent(out), optional :: rc
```

DESCRIPTION:

Return `.true.` if the `locstream` has been created. Otherwise return `.false.`. If an error occurs, i.e. `rc /= ESMF_SUCCESS` is returned, the return value of the function will also be `.false.`.

The arguments are:

locstream `ESMF_LocStream` queried.

[rc] Return code; equals `ESMF_SUCCESS` if there are no errors.

33.4.22 ESMF_LocStreamPrint - Print the contents of a LocStream

INTERFACE:

```
subroutine ESMF_LocStreamPrint(locstream, options, rc)
```

ARGUMENTS:

```
      type(ESMF_LocStream), intent(in)             :: locstream
 -- The following arguments require argument keyword syntax (e.g. rc=rc). --
      character (len = *),  intent(in),   optional :: options
      integer,              intent(out),  optional :: rc
```

DESCRIPTION:

Prints information about the `locstream` to `stdout`. This subroutine goes through the internal data members of a locstream ! data type and prints information of each data member.

The arguments are:

locstream

[options] Print options are not yet supported.

[rc] Return code; equals `ESMF_SUCCESS` if there are no errors.

33.4.23 ESMF_LocStreamValidate - Check validity of a LocStream

INTERFACE:

```
      subroutine ESMF_LocStreamValidate(locstream, rc)
```

ARGUMENTS:

```
      type(ESMF_LocStream), intent(in)            :: locstream
 -- The following arguments require argument keyword syntax (e.g. rc=rc). --
      integer,              intent(out), optional :: rc
```

DESCRIPTION:

Validates that the `locstream` is internally consistent. Currently this method determines if the `locstream` is uninitialized or already destroyed.

The method returns an error code if problems are found.

The arguments are:

locstream `ESMF_LocStream` to validate.

[rc] Return code; equals `ESMF_SUCCESS` if the `locstream` is valid.

34 Mesh Class

34.1 Description

Unstructured grids are commonly used in the computational solution of partial differential equations. These are especially useful for problems that involve complex geometry, where using the less flexible structured grids can result

in grid representation of regions where no computation is needed. Finite element and finite volume methods map naturally to unstructured grids and are used commonly in hydrology, ocean modeling, and many other applications.

In order to provide support for application codes using unstructured grids, the ESMF library provides a class for representing unstructured grids called the **Mesh**. Fields can be created on a Mesh to hold data. Fields created on a Mesh can also be used as either the source or destination or both of an interpolation (i.e. an `ESMF_FieldRegridStore()` call) which allows data to be moved between unstructured grids. This section describes the Mesh and how to create and use them in ESMF.

34.1.1 Mesh representation in ESMF

A Mesh in ESMF is constructed of **nodes** and **elements**.

A **node**, also known as a vertex or corner, is a part of a Mesh which represents a single point. Coordinate information is set in a node.

An **element**, also known as a cell, is a part of a mesh which represents a small region of space. Elements are described in terms of a connected set of nodes which represent locations along their boundaries.

Field data may be located on either the nodes or elements of a Mesh.

The dimension of a Mesh in ESMF is specified with two parameters: the **parametric dimension** and the **spatial dimension**.

The **parametric dimension** of a Mesh is the dimension of the topology of the Mesh. This can be thought of as the dimension of the elements which make up the Mesh. For example, a Mesh composed of triangles would have a parametric dimension of 2, whereas a Mesh composed of tetrahedra would have a parametric dimension of 3.

The **spatial dimension** of a Mesh is the dimension of the space the Mesh is embedded in. In other words, it is the number of coordinate dimensions needed to describe the location of the nodes making up the Mesh.

For example, a Mesh constructed of squares on a plane would have a parametric dimension of 2 and a spatial dimension of 2. If that same Mesh were used to represent the 2D surface of a sphere, then the Mesh would still have a parametric dimension of 2, but now its spatial dimension would be 3.

34.1.2 Supported Meshes

The range of Meshes supported by ESMF are defined by several factors: dimension, element types, and distribution.

ESMF currently only supports Meshes whose number of coordinate dimensions (spatial dimension) is 2 or 3. The dimension of the elements in a Mesh (parametric dimension) must be less than or equal to the spatial dimension, but also must be either 2 or 3. This means that a Mesh may be either 2D elements in 2D space, 3D elements in 3D space, or a manifold constructed of 2D elements embedded in 3D space.

ESMF supports a range of elements for each Mesh parametric dimension. For a parametric dimension of 2, the native supported element types are triangles and quadrilaterals. In addition to these, ESMF supports 2D polygons with any number of sides. Internally these are represented as sets of triangles, but to the user should behave like any other element. For a parametric dimension of 3, the supported element types are tetrahedrons and hexahedrons. See Section 34.2.1 for diagrams of these. The Mesh supports any combination of element types within a particular dimension, but types from different dimensions may not be mixed. For example, a Mesh cannot be constructed of both quadrilaterals and tetrahedra.

ESMF currently only supports distributions where every node on a PET must be a part of an element on that PET. In other words, there must not be nodes without a corresponding element on any PET.

34.2 Constants

34.2.1 ESMF_MESHELEMTYPE

DESCRIPTION:
An ESMF Mesh can be constructed from a combination of different elements. The type of elements that can be used in a Mesh depends on the Mesh's parameteric dimension, which is set during Mesh creation. The following are the valid Mesh element types for each valid Mesh parametric dimension (2D or 3D) .

```
                3                                4 ---------- 3
               / \                               |            |
              /   \                              |            |
             /     \                             |            |
            /       \                            |            |
           /         \                           |            |
          1 --------- 2                          1 ---------- 2

     ESMF_MESHELEMTYPE_TRI                  ESMF_MESHELEMTYPE_QUAD

  2D element types (numbers are the order for elementConn during Mesh create)
```

For a Mesh with parametric dimension of 2 ESMF supports two native element types (illustrated above), but also supports polygons with more sides. Internally these polygons are represented as a set of triangles, but to the user should behave like other elements. To specify the non-native polygons in the `elementType` argument use the number of corners of the polygon (e.g. for a pentagon use 5). The connectivity for a polygon should be specified in counterclockwise order. The following table summarizes this information:

Element Type	Number of Nodes	Description
ESMF_MESHELEMTYPE_TRI	3	A triangle
ESMF_MESHELEMTYPE_QUAD	4	A quadrilateral (e.g. a rectangle)
N	N	An N-gon (e.g. if N=5 a pentagon)

```
          3                                  8---------------7
         /|\                                /|              /|
        / | \                              / |             / |
       /  |  \                            /  |            /  |
      /   |   \                          /   |           /   |
     /    |    \                        /    |          /    |
    /     |     \                      5---------------6     |
   4-----|-----2                       |     |          |     |
    \     |     /                      |     4----------|----3
     \    |    /                       |    /           |    /
      \   |   /                        |   /            |   /
       \  |  /                         |  /             |  /
        \|/                            |/               |/
         1                             1---------------2
```

```
ESMF_MESHELEMTYPE_TETRA              ESMF_MESHELEMTYPE_HEX

3D element types (numbers are the order for elementConn during Mesh create)
```

For a Mesh with parametric dimension of 3 the valid element types (illustrated above) are:

Element Type	Number of Nodes	Description
ESMF_MESHELEMTYPE_TETRA	4	A tetrahedron (NOT VALID IN BILINEAR OR PATCH REGRID)
ESMF_MESHELEMTYPE_HEX	8	A hexahedron (e.g. a cube)

34.3 Use and Examples

This section describes the use of the ESMF Mesh class. It starts with an explanation and examples of creating a Mesh and then goes through other Mesh methods. This set of sections covers the use of the Mesh class interfaces. For further detail which applies to creating a Field on a Mesh, please see Section 27.3.19.

34.3.1 Mesh creation

To create a Mesh we need to set some properties of the Mesh as a whole, some properties of each node in the mesh and then some properties of each element which connects the nodes (for a definition of node and element please see Section 34.1.1).

For the Mesh as a whole we set its parametric dimension (`parametricDim`) and spatial dimension (`spatialDim`). A Mesh's parametric dimension can be thought of as the dimension of the elements which make up the Mesh. A Mesh's spatial dimension, on the other hand, is the is the number of coordinate dimensions needed to describe the location of the nodes making up the Mesh. (For a fuller definition of these terms please see Section 34.1.1.)

The structure of the per node and element information used to create a Mesh is influenced by the Mesh distribution strategy. The Mesh class is distributed by elements. This means that a node must be present on any PET that contains an element associated with that node, but not on any other PET (a node can't be on a PET without an element "home"). Since a node may be used by two or more elements located on different PETs, a node may be duplicated on multiple PETs. When a node is duplicated in this manner, one and only one of the PETs that contain the node must "own" the node. The user sets this ownership when they define the nodes during Mesh creation. When a Field is created on a Mesh (i.e. on the Mesh nodes), on each PET the Field is only created on the nodes which are owned by that PET. This means that the size of the Field memory on the PET can be smaller than the number of nodes used to create the Mesh on that PET. Please see Section 27.3.19 in Field for further explanation and examples of this issue and others in working with Fields on Meshes.

For each node in the Mesh we set three properties: the global id of the node (`nodeIds`), node coordinates (`nodeCoords`), and which PET owns the node (`nodeOwners`). The node id is a unique (across all PETs) integer attached to the particular node. It is used to indicate which nodes are the same when connecting together pieces of the Mesh on different processors. The node coordinates indicate the location of a node in space and are used in the `ESMF_FieldRegrid()` functionality when interpolating. The node owner indicates which PET is in charge of the node. This is used when creating a Field on the Mesh to indicate which PET should contain a Field location for the data.

For each element in the Mesh we set three properties: the global id of the element (`elementIds`), the topology type of the element (`elementTypes`), and which nodes are connected together to form the element (`elementConn`). The element id is a unique (across all PETs) integer attached to the particular element. The element type describes the topology of the element (e.g. a triangle vs. a quadrilateral). The range of choices for the topology of the elements in a Mesh are restricted by the Mesh's parametric dimension (e.g. a Mesh can't contain a 2D element like a triangle, when its parametric dimension is 3D), but it can contain any combination of elements appropriate to its dimension. In particular, in 2D ESMF supports two native element types triangle and quadrilateral, but also provides support for

polygons with any number of sides. These polygons are represented internally as sets of triangles, but to the user should behave like other elements. To specify a polygon with more than four sides, the element type should be set to the number of corners of the polygon (e.g. element type=6 for a hexagon). The element connectivity indicates which nodes are to be connected together to form the element. The number of nodes connected together for each element is implied by the elements topology type (`elementTypes`). It is IMPORTANT to note, that the entries in this list are NOT the global ids of the nodes, but are indices into the PET local lists of node info used in the Mesh Create. In other words, the element connectivity isn't specified in terms of the global list of nodes, but instead is specified in terms of the locally described node info. One other important point about connectivities is that the order of the nodes in the connectivity list of an element is important. Please see Section 34.2.1 for diagrams illustrating the correct order of nodes in an element. In general, when specifying an element with parametric dimension 2, the nodes should be given in counterclockwise order around the element.

Mesh creation may either be performed as a one step process using the full `ESMF_MeshCreate()` call, or may be done in three steps. The three step process starts with a more minimal `ESMF_MeshCreate()` call. It is then followed by the `ESMF_MeshAddNodes()` to specify nodes, and then the `ESMF_MeshAddElements()` call to specify elements. This three step sequence is useful to conserve memory because the node arrays being used for the `ESMF_MeshAddNodes()` call can be deallocated before creating the arrays to be used in the `ESMF_MeshAddElements()` call.

34.3.2 Create a small single PET Mesh in one step

```
2.0   7 ------- 8 ------- 9
      |         |         |
      |    4    |    5    |
      |         |         |
1.0   4 ------- 5 ------- 6
      |         |  \   3  |
      |    1    |    \    |
      |         |  2   \  |
0.0   1 ------- 2 ------- 3

     0.0       1.0        2.0

      Node Id labels at corners
     Element Id labels in centers
     (Everything owned by PET 0)
```

This example is intended to illustrate the creation of a small Mesh on one PET. The reason for starting with a single PET case is so that the user can start to familiarize themselves with the concepts of Mesh creation without the added complication of multiple processors. Later examples illustrate the multiple processor case. This example creates the small 2D Mesh which can be seen in the figure above. Note that this Mesh consists of 9 nodes and 5 elements, where the elements are a mixture of quadrilaterals and triangles. The coordinates of the nodes in the Mesh range from 0.0 to 2.0 in both dimensions. The node ids are in the corners of the elements whereas the element ids are in the centers. The following section of code illustrates the creation of this Mesh.

```
! Set number of nodes
numNodes=9

! Allocate and fill the node id array.
```

```
allocate(nodeIds(numNodes))
nodeIds=(/1,2,3,4,5,6,7,8,9/)

! Allocate and fill node coordinate array.
! Since this is a 2D Mesh the size is 2x the
! number of nodes.
allocate(nodeCoords(2*numNodes))
nodeCoords=(/0.0,0.0, & ! node id 1
             1.0,0.0, & ! node id 2
             2.0,0.0, & ! node id 3
             0.0,1.0, & ! node id 4
             1.0,1.0, & ! node id 5
             2.0,1.0, & ! node id 6
             0.0,2.0, & ! node id 7
             1.0,2.0, & ! node id 8
             2.0,2.0 /) ! node id 9

! Allocate and fill the node owner array.
! Since this Mesh is all on PET 0, it's just set to all 0.
allocate(nodeOwners(numNodes))
nodeOwners=0 ! everything on PET 0


! Set the number of each type of element, plus the total number.
numQuadElems=3
numTriElems=2
numTotElems=numQuadElems+numTriElems


! Allocate and fill the element id array.
allocate(elemIds(numTotElems))
elemIds=(/1,2,3,4,5/)


! Allocate and fill the element topology type array.
allocate(elemTypes(numTotElems))
elemTypes=(/ESMF_MESHELEMTYPE_QUAD, & ! elem id 1
            ESMF_MESHELEMTYPE_TRI,  & ! elem id 2
            ESMF_MESHELEMTYPE_TRI,  & ! elem id 3
            ESMF_MESHELEMTYPE_QUAD, & ! elem id 4
            ESMF_MESHELEMTYPE_QUAD/)  ! elem id 5


! Allocate and fill the element connection type array.
! Note that entries in this array refer to the
! positions in the nodeIds, etc. arrays and that
! the order and number of entries for each element
! reflects that given in the Mesh options
! section for the corresponding entry
! in the elemTypes array. The number of
! entries in this elemConn array is the
! number of nodes in a quad. (4) times the
! number of quad. elements plus the number
! of nodes in a triangle (3) times the number
! of triangle elements.
```

```
allocate(elemConn(4*numQuadElems+3*numTriElems))
elemConn=(/1,2,5,4, &  ! elem id 1
           2,3,5,   &  ! elem id 2
           3,6,5,   &  ! elem id 3
           4,5,8,7, &  ! elem id 4
           5,6,9,8/)   ! elem id 5


! Create Mesh structure in 1 step
mesh=ESMF_MeshCreate(parametricDim=2,spatialDim=2, &
       coordSys=ESMF_COORDSYS_CART, &
       nodeIds=nodeIds, nodeCoords=nodeCoords, &
       nodeOwners=nodeOwners, elementIds=elemIds,&
       elementTypes=elemTypes, elementConn=elemConn, &
       rc=localrc)


! After the creation we are through with the arrays, so they may be
! deallocated.
deallocate(nodeIds)
deallocate(nodeCoords)
deallocate(nodeOwners)
deallocate(elemIds)
deallocate(elemTypes)
deallocate(elemConn)


! At this point the mesh is ready to use. For example, as is
! illustrated here, to have a field created on it. Note that
! the Field only contains data for nodes owned by the current PET.
! Please see Section "Create a Field from a Mesh" under Field
! for more information on creating a Field on a Mesh.
field = ESMF_FieldCreate(mesh, ESMF_TYPEKIND_R8,  rc=localrc)
```

34.3.3 Create a small single PET Mesh in three steps

This example is intended to illustrate the creation of a small Mesh in three steps on one PET. The Mesh being created is exactly the same one as in the last example (Section 34.3.2), but the three step process allows the creation to occur in a more memory efficient manner.

```
! Create the mesh structure setting the dimensions
! and coordinate system
mesh = ESMF_MeshCreate(parametricDim=2,spatialDim=2, &
                       coordSys=ESMF_COORDSYS_CART, &
                       rc=localrc)

! Set number of nodes
numNodes=9

! Allocate and fill the node id array.
allocate(nodeIds(numNodes))
nodeIds=(/1,2,3,4,5,6,7,8,9/)
```

```
! Allocate and fill node coordinate array.
! Since this is a 2D Mesh the size is 2x the
! number of nodes.
allocate(nodeCoords(2*numNodes))
nodeCoords=(/0.0,0.0, & ! node id 1
             1.0,0.0, & ! node id 2
             2.0,0.0, & ! node id 3
             0.0,1.0, & ! node id 4
             1.0,1.0, & ! node id 5
             2.0,1.0, & ! node id 6
             0.0,2.0, & ! node id 7
             1.0,2.0, & ! node id 8
             2.0,2.0 /) ! node id 9

! Allocate and fill the node owner array.
! Since this Mesh is all on PET 0, it's just set to all 0.
allocate(nodeOwners(numNodes))
nodeOwners=0 ! everything on PET 0

! Add the nodes to the Mesh
call ESMF_MeshAddNodes(mesh, nodeIds=nodeIds, &
       nodeCoords=nodeCoords, nodeOwners=nodeOwners, rc=localrc)

!!!!!!!!!!!!!!!!!!!!!!!!!!!!!!!!!!!!!!!!!!!!!!!!!!!
! HERE IS THE POINT OF THE THREE STEP METHOD
! WE CAN DELETE THESE NODE ARRAYS BEFORE
! ALLOCATING THE ELEMENT ARRAYS, THEREBY
! REDUCING THE AMOUNT OF MEMORY NEEDED
! AT ONE TIME.
!!!!!!!!!!!!!!!!!!!!!!!!!!!!!!!!!!!!!!!!!!!!!!!!!!!
deallocate(nodeIds)
deallocate(nodeCoords)
deallocate(nodeOwners)


! Set the number of each type of element, plus the total number.
numQuadElems=3
numTriElems=2
numTotElems=numQuadElems+numTriElems

! Allocate and fill the element id array.
allocate(elemIds(numTotElems))
elemIds=(/1,2,3,4,5/)

! Allocate and fill the element topology type array.
allocate(elemTypes(numTotElems))
elemTypes=(/ESMF_MESHELEMTYPE_QUAD, & ! elem id 1
            ESMF_MESHELEMTYPE_TRI,  & ! elem id 2
            ESMF_MESHELEMTYPE_TRI,  & ! elem id 3
            ESMF_MESHELEMTYPE_QUAD, & ! elem id 4
            ESMF_MESHELEMTYPE_QUAD/)  ! elem id 5


! Allocate and fill the element connection type array.
```

```
! Note that entries in this array refer to the
! positions in the nodeIds, etc. arrays and that
! the order and number of entries for each element
! reflects that given in the Mesh options
! section for the corresponding entry
! in the elemTypes array. The number of
! entries in this elemConn array is the
! number of nodes in a quad. (4) times the
! number of quad. elements plus the number
! of nodes in a triangle (3) times the number
! of triangle elements.
allocate(elemConn(4*numQuadElems+3*numTriElems))
elemConn=(/1,2,5,4, &  ! elem id 1
           2,3,5,   &  ! elem id 2
           3,6,5,   &  ! elem id 3
           4,5,8,7, &  ! elem id 4
           5,6,9,8/)   ! elem id 5


! Finish the creation of the Mesh by adding the elements
call ESMF_MeshAddElements(mesh, elementIds=elemIds,&
       elementTypes=elemTypes, elementConn=elemConn, &
       rc=localrc)

! After the creation we are through with the arrays, so they may be
! deallocated.
deallocate(elemIds)
deallocate(elemTypes)
deallocate(elemConn)


! At this point the mesh is ready to use. For example, as is
! illustrated here, to have a field created on it. Note that
! the Field only contains data for nodes owned by the current PET.
! Please see Section "Create a Field from a Mesh" under Field
! for more information on creating a Field on a Mesh.
field = ESMF_FieldCreate(mesh, ESMF_TYPEKIND_R8,  rc=localrc)
```

34.3.4 Create a small Mesh on 4 PETs in one step

```
2.0   7 ------- 8        [8] ------ 9
      |         |         |         |
      |    4    |         |    5    |
      |         |         |         |
1.0  [4] ----- [5]       [5] ----- [6]

     0.0       1.0       1.0       2.0

         PET 2               PET 3


1.0   4 ------- 5        [5] ------ 6
      |         |         |  \   3  |
      |    1    |         |    \    |
      |         |         | 2    \  |
0.0   1 ------- 2        [2] ------ 3

     0.0       1.0       1.0      2.0

         PET 0               PET 1

             Node Id labels at corners
            Element Id labels in centers
```

This example is intended to illustrate the creation of a small Mesh on multiple PETs. This example creates the same small 2D Mesh as the previous two examples (See Section 34.3.2 for a diagram), however, in this case the Mesh is broken up across 4 PETs. The figure above illustrates the distribution of the Mesh across the PETs. As in the previous diagram, the node ids are in the corners of the elements and the element ids are in the centers. In this figure '[' and ']' around a character indicate a node which is owned by another PET. The nodeOwner parameter indicates which PET owns the node. Note that the three step creation illustrated in Section 34.3.3 could also be used in a parallel Mesh creation such as this by simply interleaving the three calls in the appropriate places between the node and element array definitions.

```
 ! Break up what's being set by PET
 if (localPET .eq. 0) then !!! This part only for PET 0
    ! Set number of nodes
     numNodes=4

    ! Allocate and fill the node id array.
    allocate(nodeIds(numNodes))
    nodeIds=(/1,2,4,5/)

    ! Allocate and fill node coordinate array.
    ! Since this is a 2D Mesh the size is 2x the
    ! number of nodes.
    allocate(nodeCoords(2*numNodes))
    nodeCoords=(/0.0,0.0, & ! node id 1
```

```
              1.0,0.0, & ! node id 2
              0.0,1.0, & ! node id 4
              1.0,1.0 /) ! node id 5

  ! Allocate and fill the node owner array.
  allocate(nodeOwners(numNodes))
  nodeOwners=(/0, & ! node id 1
              0, & ! node id 2
              0, & ! node id 4
              0/)  ! node id 5

  ! Set the number of each type of element, plus the total number.
  numQuadElems=1
  numTriElems=0
  numTotElems=numQuadElems+numTriElems

  ! Allocate and fill the element id array.
  allocate(elemIds(numTotElems))
  elemIds=(/1/)

  ! Allocate and fill the element topology type array.
  allocate(elemTypes(numTotElems))
  elemTypes=(/ESMF_MESHELEMTYPE_QUAD/) ! elem id 1

  ! Allocate and fill the element connection type array.
  ! Note that entry are local indices
  allocate(elemConn(4*numQuadElems+3*numTriElems))
  elemConn=(/1,2,4,3/) ! elem id 1

else if (localPET .eq. 1) then !!! This part only for PET 1
  ! Set number of nodes
   numNodes=4

  ! Allocate and fill the node id array.
  allocate(nodeIds(numNodes))
  nodeIds=(/2,3,5,6/)

  ! Allocate and fill node coordinate array.
  ! Since this is a 2D Mesh the size is 2x the
  ! number of nodes.
  allocate(nodeCoords(2*numNodes))
  nodeCoords=(/1.0,0.0, & ! node id 2
              2.0,0.0, & ! node id 3
              1.0,1.0, & ! node id 5
              2.0,1.0 /) ! node id 6

  ! Allocate and fill the node owner array.
  allocate(nodeOwners(numNodes))
  nodeOwners=(/0, & ! node id 2
              1, & ! node id 3
              0, & ! node id 5
              1/)  ! node id 6

  ! Set the number of each type of element, plus the total number.
  numQuadElems=0
```

```
  numTriElems=2
  numTotElems=numQuadElems+numTriElems

  ! Allocate and fill the element id array.
  allocate(elemIds(numTotElems))
  elemIds=(/2,3/)

  ! Allocate and fill the element topology type array.
  allocate(elemTypes(numTotElems))
  elemTypes=(/ESMF_MESHELEMTYPE_TRI, & ! elem id 2
              ESMF_MESHELEMTYPE_TRI/)  ! elem id 3

  ! Allocate and fill the element connection type array.
  allocate(elemConn(4*numQuadElems+3*numTriElems))
  elemConn=(/1,2,3, & ! elem id 2
             2,4,3/)  ! elem id 3

else if (localPET .eq. 2) then !!! This part only for PET 2
  ! Set number of nodes
   numNodes=4

  ! Allocate and fill the node id array.
  allocate(nodeIds(numNodes))
  nodeIds=(/4,5,7,8/)

  ! Allocate and fill node coordinate array.
  ! Since this is a 2D Mesh the size is 2x the
  ! number of nodes.
  allocate(nodeCoords(2*numNodes))
  nodeCoords=(/0.0,1.0, & ! node id 4
               1.0,1.0, & ! node id 5
               0.0,2.0, & ! node id 7
               1.0,2.0 /) ! node id 8

  ! Allocate and fill the node owner array.
  ! Since this Mesh is all on PET 0, it's just set to all 0.
  allocate(nodeOwners(numNodes))
  nodeOwners=(/0, & ! node id 4
               0, & ! node id 5
               2, & ! node id 7
               2/)  ! node id 8

  ! Set the number of each type of element, plus the total number.
  numQuadElems=1
  numTriElems=0
  numTotElems=numQuadElems+numTriElems

  ! Allocate and fill the element id array.
  allocate(elemIds(numTotElems))
  elemIds=(/4/)

  ! Allocate and fill the element topology type array.
  allocate(elemTypes(numTotElems))
  elemTypes=(/ESMF_MESHELEMTYPE_QUAD/) ! elem id 4
```

```
  ! Allocate and fill the element connection type array.
  allocate(elemConn(4*numQuadElems+3*numTriElems))
  elemConn=(/1,2,4,3/) ! elem id 4

else if (localPET .eq. 3) then !!! This part only for PET 3
  ! Set number of nodes
   numNodes=4

  ! Allocate and fill the node id array.
  allocate(nodeIds(numNodes))
  nodeIds=(/5,6,8,9/)

  ! Allocate and fill node coordinate array.
  ! Since this is a 2D Mesh the size is 2x the
  ! number of nodes.
  allocate(nodeCoords(2*numNodes))
  nodeCoords=(/1.0,1.0, &  ! node id 5
               2.0,1.0, &  ! node id 6
               1.0,2.0, &  ! node id 8
               2.0,2.0 /)  ! node id 9

  ! Allocate and fill the node owner array.
  allocate(nodeOwners(numNodes))
  nodeOwners=(/0, & ! node id 5
               1, & ! node id 6
               2, & ! node id 8
               3/)  ! node id 9

  ! Set the number of each type of element, plus the total number.
  numQuadElems=1
  numTriElems=0
  numTotElems=numQuadElems+numTriElems

  ! Allocate and fill the element id array.
  allocate(elemIds(numTotElems))
  elemIds=(/5/)

  ! Allocate and fill the element topology type array.
  allocate(elemTypes(numTotElems))
  elemTypes=(/ESMF_MESHELEMTYPE_QUAD/) ! elem id 5

  ! Allocate and fill the element connection type array.
  allocate(elemConn(4*numQuadElems+3*numTriElems))
  elemConn=(/1,2,4,3/) ! elem id 5
endif


! Create Mesh structure in 1 step
mesh=ESMF_MeshCreate(parametricDim=2, spatialDim=2, &
       coordSys=ESMF_COORDSYS_CART, &
       nodeIds=nodeIds, nodeCoords=nodeCoords, &
       nodeOwners=nodeOwners, elementIds=elemIds,&
       elementTypes=elemTypes, elementConn=elemConn, &
       rc=localrc)
```

```
! After the creation we are through with the arrays, so they may be
! deallocated.
deallocate(nodeIds)
deallocate(nodeCoords)
deallocate(nodeOwners)
deallocate(elemIds)
deallocate(elemTypes)
deallocate(elemConn)


! At this point the mesh is ready to use. For example, as is
! illustrated here, to have a field created on it. Note that
! the Field only contains data for nodes owned by the current PET.
! Please see Section "Create a Field from a Mesh" under Field
! for more information on creating a Field on a Mesh.
field = ESMF_FieldCreate(mesh, ESMF_TYPEKIND_R8,  rc=localrc)
```

34.3.5 Create a copy of a Mesh with a new distribution

```
  2.0   7 -------[8]                8 ------- 9
        |         |                 |         |
        |    4    |                 |    5    |
        |         |                 |         |
  1.0   4 ------ [5]                5 ------- 6

       0.0       1.0               1.0       2.0

           PET 1                       PET 0


  1.0  [4] ----- [5]               [5] ----- [6]
        |         |  \                \       |
        |    1    | 2  \                \  3 |
        |         |      \                \  |
  0.0   1 ------- 2 -----[3]                 3

       0.0       1.0                1.0      2.0

           PET 2                       PET 3

               Node Id labels at corners
              Element Id labels in centers
```

This example demonstrates the creation of a new Mesh which is a copy of an existing Mesh with a new distribution of the original Mesh's nodes and elements. To create the new Mesh in this manner the user needs two DistGrids. One to describe the new distribution of the nodes. The other to describe the new distribution of the elements. In this example we create new DistGrids from a list of indices. The DistGrids are then used in the redistribution Mesh create interface which is overloaded to `ESMF_MeshCreate()`. In this example we redistribute the Mesh created in the previous

example (Section 34.3.4) to the distribution pictured above. Note that for simplicity's sake, the position of the Mesh in the diagram is basically the same, but the PET positions and node owners have been changed.

```
! Setup the new location of nodes and elements depending on the processor
if (localPet .eq. 0) then !!! This part only for PET 0
   allocate(elemIds(1))
   elemIds=(/5/)

   allocate(nodeIds(4))
   nodeIds=(/5,6,8,9/)

else if (localPet .eq. 1) then !!! This part only for PET 1
   allocate(elemIds(1))
   elemIds=(/4/)

   allocate(nodeIds(2))
   nodeIds=(/7,4/)

else if (localPet .eq. 2) then !!! This part only for PET 2
   allocate(elemIds(2))
   elemIds=(/1,2/)

   allocate(nodeIds(2))
   nodeIds=(/1,2/)

else if (localPet .eq. 3) then !!! This part only for PET 3
   allocate(elemIds(1))
   elemIds=(/3/)

   allocate(nodeIds(1))
   nodeIds=(/3/)

endif


! Create new node DistGrid
nodedistgrid=ESMF_DistGridCreate(nodeIds, rc=localrc)
if (localrc .ne. ESMF_SUCCESS) rc=ESMF_FAILURE


! Create new element DistGrid
elemdistgrid=ESMF_DistGridCreate(elemIds, rc=localrc)
if (localrc .ne. ESMF_SUCCESS) rc=ESMF_FAILURE


! Can now deallocate distribution lists
deallocate(elemIds)
deallocate(nodeIds)


! Create new redisted Mesh based on DistGrids
mesh2=ESMF_MeshCreate(mesh,                          &
                      nodalDistgrid=nodedistgrid,    &
                      elementDistgrid=elemdistgrid,  &
```

```
                      rc=localrc)
if (localrc .ne. ESMF_SUCCESS) rc=ESMF_FAILURE


! At this point the mesh is ready to use. For example, as is
! illustrated here, to have a field created on it. Note that
! the Field only contains data for nodes owned by the current PET.
! Please see Section "Create a Field from a Mesh" under Field
! for more information on creating a Field on a Mesh.
field = ESMF_FieldCreate(mesh2, ESMF_TYPEKIND_R8,  rc=localrc)
```

34.3.6 Create a small Mesh of all one element type on 4 PETs using easy element method

```
2.0   * ------- *         * ------- *
      |         |         |         |
      |    3    |         |    4    |
      |         |         |         |
1.0   * ------- *         * ------- *

     0.0       1.0       1.0       2.0

         PET 2               PET 3


1.0   * ------- *         * ------- *
      |         |         |         |
      |    1    |         |    2    |
      |         |         |         |
0.0   * ------- *         * ------- *

     0.0       1.0       1.0      2.0

         PET 0               PET 1

         Element Id labels in centers
```

This example is intended to illustrate the creation of a small Mesh on multiple PETs using the easy element creation interface. Here the Mesh consists of only one type of element, so we can use a slightly more convenient interface. In this interface the user only needs to specify the element type once and the elementCornerCoords argument has three dimensions. This means that the corners for all elements are not collapsed into a 1D list as happens with the next example.

The figure above shows the Mesh to be created and it's distribution across the PETs. As in the previous diagrams, the element ids are in the centers. Note that in the example code below the user doesn't specify the element ids. In this case, they are assigned sequentially through the local elements on each PET starting with 1 for the first element on PET 0. (It isn't shown in the example below, but there is an optional argument that enables the user to set the element ids if they wish.) Unlike some of the previous examples of Mesh creation, here the user doesn't specify node ids or ownership, so that information is shown by a "*" in the diagram.

```
! Break up what's being set by PET
if (localPET .eq. 0) then !!! This part only for PET 0

   ! Set the number of elements on this PET
   numTotElems=1

   ! Allocate and fill element corner coordinate array.
   allocate(elemCornerCoords3(2,4,numTotElems))
   elemCornerCoords3(:,1,1)=(/0.0,0.0/) ! elem id 1 corner 1
   elemCornerCoords3(:,2,1)=(/1.0,0.0/) ! elem id 1 corner 2
   elemCornerCoords3(:,3,1)=(/1.0,1.0/) ! elem id 1 corner 3
   elemCornerCoords3(:,4,1)=(/0.0,1.0/) ! elem id 1 corner 4

 else if (localPET .eq. 1) then !!! This part only for PET 1

   ! Set the number of elements on this PET
   numTotElems=1

   ! Allocate and fill element corner coordinate array.
   allocate(elemCornerCoords3(2,4,numTotElems))
   elemCornerCoords3(:,1,1)=(/1.0,0.0/) ! elem id 2 corner 1
   elemCornerCoords3(:,2,1)=(/2.0,0.0/) ! elem id 2 corner 2
   elemCornerCoords3(:,3,1)=(/2.0,1.0/) ! elem id 2 corner 3
   elemCornerCoords3(:,4,1)=(/1.0,1.0/) ! elem id 2 corner 4


 else if (localPET .eq. 2) then !!! This part only for PET 2

   ! Set the number of elements on this PET
   numTotElems=1

   ! Allocate and fill element corner coordinate array.
   allocate(elemCornerCoords3(2,4,numTotElems))
   elemCornerCoords3(:,1,1)=(/0.0,1.0/) ! elem id 3 corner 1
   elemCornerCoords3(:,2,1)=(/1.0,1.0/) ! elem id 3 corner 2
   elemCornerCoords3(:,3,1)=(/1.0,2.0/) ! elem id 3 corner 3
   elemCornerCoords3(:,4,1)=(/0.0,2.0/) ! elem id 3 corner 4


 else if (localPET .eq. 3) then !!! This part only for PET 3

   ! Set the number of elements on this PET
   numTotElems=1

   ! Allocate and fill element corner coordinate array.
   allocate(elemCornerCoords3(2,4,numTotElems))
   elemCornerCoords3(:,1,1)=(/1.0,1.0/) ! elem id 4 corner 1
   elemCornerCoords3(:,2,1)=(/2.0,1.0/) ! elem id 4 corner 2
   elemCornerCoords3(:,3,1)=(/2.0,2.0/) ! elem id 4 corner 3
   elemCornerCoords3(:,4,1)=(/1.0,2.0/) ! elem id 4 corner 4

 endif

 ! Create Mesh structure in 1 step
 mesh=ESMF_MeshCreate(parametricDim=2, &
```

```
        coordSys=ESMF_COORDSYS_CART,   &
        elementType=ESMF_MESHELEMTYPE_QUAD, &
        elementCornerCoords=elemCornerCoords3, &
        rc=localrc)


  ! After the creation we are through with the arrays, so they may be
  ! deallocated.
  deallocate(elemCornerCoords3)

  ! At this point the mesh is ready to use. For example, as is
  ! illustrated here, to have a field created on it. Note that
  ! the Field only contains data for elements owned by the current PET.
  ! Please see Section "Create a Field from a Mesh" under Field
  ! for more information on creating a Field on a Mesh.
  field = ESMF_FieldCreate(mesh, ESMF_TYPEKIND_R8, &
      meshloc=ESMF_MESHLOC_ELEMENT, rc=localrc)
```

34.3.7 Create a small Mesh of multiple element types on 4 PETs using easy element method

```
  2.0   * ------- *         * ------- *
        |         |         |         |
        |    4    |         |    5    |
        |         |         |         |
  1.0   * ------- *         * ------- *

       0.0       1.0       1.0       2.0

           PET 2               PET 3


  1.0   * ------- *         * ------- *
        |         |         |  \   3  |
        |    1    |         |    \    |
        |         |         | 2    \  |
  0.0   * ------- *         * ------- *

       0.0       1.0       1.0      2.0

           PET 0               PET 1

           Element Id labels in centers
```

This example is intended to illustrate the creation of a small Mesh on multiple PETs using the easy element creation interface. In this example, the Mesh being created contains elements of multiple types. To support the specification of a set of elements containing different types and thus different numbers of corners, the elementCornerCoords argument has the corner and element dimensions collapsed together into one dimension.

The figure above shows the Mesh to be created and it's distribution across the PETs. As in the previous diagrams, the element ids are in the centers. Note that in the example code below the user doesn't specify the element ids. In this

case, they are assigned sequentially through the local elements on each PET starting with 1 for the first element on PET 0. (It isn't shown in the example below, but there is an optional argument that enables the user to set the element ids if they wish.) Unlike some of the previous examples of Mesh creation, here the user doesn't specify node ids or ownership, so that information is shown by a "*" in the diagram.

```
 ! Break up what's being set by PET
 if (localPET .eq. 0) then !!! This part only for PET 0

    ! Set the number of each type of element, plus the total number.
    numQuadElems=1
    numTriElems=0
    numTotElems=numQuadElems+numTriElems
    numElemCorners=4*numQuadElems+3*numTriElems

    ! Allocate and fill the element type array.
    allocate(elemTypes(numTotElems))
    elemTypes=(/ESMF_MESHELEMTYPE_QUAD/) ! elem id 1

    ! Allocate and fill element corner coordinate array.
    allocate(elemCornerCoords2(2,numElemCorners))
    elemCornerCoords2(:,1)=(/0.0,0.0/) ! elem id 1 corner 1
    elemCornerCoords2(:,2)=(/1.0,0.0/) ! elem id 1 corner 2
    elemCornerCoords2(:,3)=(/1.0,1.0/) ! elem id 1 corner 3
    elemCornerCoords2(:,4)=(/0.0,1.0/) ! elem id 1 corner 4

  else if (localPET .eq. 1) then !!! This part only for PET 1

    ! Set the number of each type of element, plus the total number.
    numQuadElems=0
    numTriElems=2
    numTotElems=numQuadElems+numTriElems
    numElemCorners=4*numQuadElems+3*numTriElems

    ! Allocate and fill the element type array.
    allocate(elemTypes(numTotElems))
    elemTypes=(/ESMF_MESHELEMTYPE_TRI, & ! elem id 2
                ESMF_MESHELEMTYPE_TRI/)  ! elem id 3

    ! Allocate and fill element corner coordinate array.
    allocate(elemCornerCoords2(2,numElemCorners))
    elemCornerCoords2(:,1)=(/1.0,0.0/) ! elem id 2 corner 1
    elemCornerCoords2(:,2)=(/2.0,0.0/) ! elem id 2 corner 2
    elemCornerCoords2(:,3)=(/1.0,1.0/) ! elem id 2 corner 3
    elemCornerCoords2(:,4)=(/2.0,0.0/) ! elem id 3 corner 1
    elemCornerCoords2(:,5)=(/2.0,1.0/) ! elem id 3 corner 2
    elemCornerCoords2(:,6)=(/1.0,1.0/) ! elem id 3 corner 3

  else if (localPET .eq. 2) then !!! This part only for PET 2

    ! Set the number of each type of element, plus the total number.
    numQuadElems=1
    numTriElems=0
    numTotElems=numQuadElems+numTriElems
    numElemCorners=4*numQuadElems+3*numTriElems
```

```
  ! Allocate and fill the element type array.
  allocate(elemTypes(numTotElems))
  elemTypes=(/ESMF_MESHELEMTYPE_QUAD/) ! elem id 4

  ! Allocate and fill element corner coordinate array.
  allocate(elemCornerCoords2(2,numElemCorners))
  elemCornerCoords2(:,1)=(/0.0,1.0/) ! elem id 4 corner 1
  elemCornerCoords2(:,2)=(/1.0,1.0/) ! elem id 4 corner 2
  elemCornerCoords2(:,3)=(/1.0,2.0/) ! elem id 4 corner 3
  elemCornerCoords2(:,4)=(/0.0,2.0/) ! elem id 4 corner 4


else if (localPET .eq. 3) then !!! This part only for PET 3

  ! Set the number of each type of element, plus the total number.
  numQuadElems=1
  numTriElems=0
  numTotElems=numQuadElems+numTriElems
  numElemCorners=4*numQuadElems+3*numTriElems

  ! Allocate and fill the element type array.
  allocate(elemTypes(numTotElems))
  elemTypes=(/ESMF_MESHELEMTYPE_QUAD/) ! elem id 5

  ! Allocate and fill element corner coordinate array.
  allocate(elemCornerCoords2(2,numElemCorners))
  elemCornerCoords2(:,1)=(/1.0,1.0/) ! elem id 5 corner 1
  elemCornerCoords2(:,2)=(/2.0,1.0/) ! elem id 5 corner 2
  elemCornerCoords2(:,3)=(/2.0,2.0/) ! elem id 5 corner 3
  elemCornerCoords2(:,4)=(/1.0,2.0/) ! elem id 5 corner 4

endif

! Create Mesh structure in 1 step
mesh=ESMF_MeshCreate(parametricDim=2, &
       coordSys=ESMF_COORDSYS_CART,   &
       elementTypes=elemTypes, &
       elementCornerCoords=elemCornerCoords2, &
       rc=localrc)


! After the creation we are through with the arrays, so they may be
! deallocated.
deallocate(elemTypes)
deallocate(elemCornerCoords2)

! At this point the mesh is ready to use. For example, as is
! illustrated here, to have a field created on it. Note that
! the Field only contains data for elements owned by the current PET.
! Please see Section "Create a Field from a Mesh" under Field
! for more information on creating a Field on a Mesh.
field = ESMF_FieldCreate(mesh, ESMF_TYPEKIND_R8, &
     meshloc=ESMF_MESHLOC_ELEMENT, rc=localrc)
```

34.3.8 Create a Mesh from an unstructured grid file

ESMF supports the creation of a Mesh from three grid file formats: the SCRIP format 12.8.1, the ESMF format 12.8.2 or the proposed CF unstructured grid UGRID format 12.8.4. All three of these grid file formats are NetCDF files.

When creating a Mesh from a SCRIP format file, there are a number of options to control the output Mesh. The data is located at the center of the grid cell in a SCRIP grid; whereas the data is located at the corner of a cell in an ESMF Mesh object. Therefore, we create a Mesh object by default by constructing a "dual" mesh using the coordinates in the file. If the user wishes to not construct the dual mesh, the optional argument `convertToDual` may be used to control this behavior. When `comvertToDual` is set to .false. the Mesh constructed from the file will not be the dual. This is necessary when using the Mesh as part of a conservative regridding operation in the `ESMF_FieldRegridStore()` call, so the weights are properly generated for the cell centers in the file.

The following example code depicts how to create a Mesh using a SCRIP file. Note that you have to set the `fileformat` to ESMF_FILEFORMAT_SCRIP.

```
mesh = ESMF_MeshCreate(filename="data/ne4np4-pentagons.nc", &
     fileformat=ESMF_FILEFORMAT_SCRIP, rc=localrc)
```

As mentioned above ESMF also supports creating Meshes from the ESMF format. The ESMF format works better with the methods used to create an ESMF Mesh object, so less conversion needs to be done to create a Mesh, and thus this format is more efficient than SCRIP to use within ESMF. The ESMF format is also more general than the SCRIP format because it supports higher dimension coordinates and more general topologies. Currently, ESMF_MeshCreate() does not support conversion to a dual mesh for this format. All regrid methods are supported on Meshes in this format.

Here is an example of creating a Mesh from an ESMF unstructured grid file. Note that you have to set the `fileformat` to ESMF_FILEFORMAT_ESMFMESH.

```
mesh = ESMF_MeshCreate(filename="data/ne4np4-esmf.nc", &
         fileformat=ESMF_FILEFORMAT_ESMFMESH, &
         rc=localrc)
```

34.3.9 Create a Mesh representation of a cubed sphere grid

This example demostrates how to create a `ESMF_Mesh` object representing a cubed sphere grid with identical regular decomposition for every tile. In this example, the tile resolution is 45, so there will be a total 45x45x6=12150 elements in the mesh. `nx` and `ny` are the regular decomposition of each tile. The total number of DEs is nx x ny x 6. If the number of PETs are less than the total number of DEs, the DEs will be distributed to the PETs using the default cyclic distribution.

```
! Decompose each tile into 2 x 1 blocks
nx=2
ny=1

! Create Mesh
mesh = ESMF_MeshCreateCubedSphere(tileSize=45, nx=nx,ny=ny, rc=localrc)
```

34.3.10 Remove Mesh memory

There are two different levels that the memory in a Mesh can be removed. The first of these is the standard destroy call, `ESMF_MeshDestroy()`. As with other classes, this call removes all memory associated with the object, and

afterwards the object can not be used further (i.e. should not be used in any methods). The second, which is unique to Mesh, is the `ESMF_MeshFreeMemory()` call. This call removes the connection and coordinate information associated with the Mesh, but leaves the distgrid information. The coordinate and connection information held in the Mesh can consume a large amount of memory for a big Mesh, so using this call can very significantly reduce the amount of memory used. However, once this method has been used on a Mesh there are some restriction on what may be done with it. Once a Mesh has had its memory freed using this method, any Field built on the Mesh can no longer be used as part of an `ESMF_FieldRegridStore()` call. However, because the distgrid information is still part of the Mesh, Fields built on such a Mesh can still be part of an `ESMF_FieldRegrid()` call (where the routehandle was generated previous to the `ESMF_MeshFreeMemory()` operation). Fields may also still be created on these Meshes. The following short piece of code illustrates the use of this call.

```
! Here a Field built on a mesh may be used
! as part of a ESMF_FieldRegridStore() call

! This call removes connection and coordinate
! information, significantly reducing the memory used by
! mesh, but limiting what can be done with it.
call ESMF_MeshFreeMemory(mesh, rc=localrc)

! Here a new Field may be built on mesh, or
! a field built on a mesh may be used as part
! of an ESMF_FieldRegrid() call

! Destroy the mesh
call ESMF_MeshDestroy(mesh, rc=localrc)

! Here mesh can't be used for anything
```

34.3.11 Mesh Masking

There are two types of masking available in Mesh: node masking and element masking. These both work in a similar manner, but vary slightly in the details of setting the mask information during mesh creation.

For node masking, the mask information is set using the `nodeMask` argument to either `ESMF_MeshCreate()` or `ESMF_MeshAddNodes()`. When a regrid store method is called (e.g. `ESMF_FieldRegridStore()`) the mask values arguments (`srcMaskValues` and `dstMaskValues`) can then be used to indicate which particular values set in the `nodeMask` array indicate that the node should be masked. For example, when calling `ESMF_FieldRegridStore()` if `dstMaskValues` has been set to 1, then any node in the destination Mesh whose corresponding `nodeMask` value is 1 will be masked out (a node with any other value than 1 will not be masked).

For element masking, the mask information is set using the `elementMask` argument to either `ESMF_MeshCreate()` or `ESMF_MeshAddElements()`. In a similar manner to node masking, when a regrid store method is called (e.g. `ESMF_FieldRegridStore()`) the mask values arguments (`srcMaskValues` and `dstMaskValues`) can then be used to indicate which particular values set in the `elementMask` array indicate that the element should be masked. For example, when calling `ESMF_FieldRegridStore()` if `dstMaskValues` has been set to 1, then any element in the destination Mesh whose corresponding `elementMask` value is 1 will be masked out (an element with any other value than 1 will not be masked).

34.3.12 Mesh Halo Communication

```
2.0   7 ------- 8         [8] ------ 9
      |         |          |         |
      |    4    |          |    5    |
      |         |          |         |
1.0  [4] ----- [5]        [5] ----- [6]

     0.0       1.0       1.0       2.0

         PET 2               PET 3


1.0   4 ------- 5         [5] ------ 6
      |         |          |  \   3  |
      |    1    |          |    \    |
      |         |          | 2    \  |
0.0   1 ------- 2         [2] ------ 3

     0.0       1.0       1.0      2.0

         PET 0               PET 1

          Node Id labels at corners
         Element Id labels in centers
```

This section illustrates the process of setting up halo communication for a Field built on the nodes of a Mesh. The Mesh used in this example is the one that was created in section 34.3.4. The diagram for that Mesh is repeated above for convenience's sake. The halo method used here is the one described in section 29.2.16, but made more specific to the case of a Mesh. This example shows how to set up haloing for nodes which are owned by another processor (e.g. the node with id 5 on PET 1 above). However, it could be expanded to halo other nodes simply by including them in the halo arrays below on the PET where their values are needed.

The first step in setting up the halo communication is to create arrays containing the ids of the haloed nodes on the PETs where they are needed.

The following illustrates that for the Mesh diagramed above.

```
! Create halo lists based on PET id.
if (localPET .eq. 0) then !!! This part only for PET 0

  ! Allocate and fill the halo list.
  allocate(haloSeqIndexList(0))  ! There are no haloed points on PET 0

else if (localPET .eq. 1) then !!! This part only for PET 1

  ! Allocate and fill the halo list.
  allocate(haloSeqIndexList(2))
  haloSeqIndexList=(/2,5/)

else if (localPET .eq. 2) then !!! This part only for PET 2
```

```
    ! Allocate and fill the halo list.
    allocate(haloSeqIndexList(2))
    haloSeqIndexList=(/4,5/)

  else if (localPET .eq. 3) then !!! This part only for PET 3

    ! Allocate and fill the halo list.
    allocate(haloSeqIndexList(3))
    haloSeqIndexList=(/5,6,8/)

  endif
```

The next step is to create an ESMF Array with a halo region to hold the data being haloed.

```
  ! Get node DistGrid from the Mesh.
  call ESMF_MeshGet(mesh, nodalDistgrid=nodeDistgrid, rc=localrc)

  ! Create an ESMF Array with a halo region from a node DistGrid.
  array=ESMF_ArrayCreate(nodeDistgrid, typekind=ESMF_TYPEKIND_R8, &
       haloSeqIndexList=haloSeqIndexList, rc=localrc)
```

Note that currently the halo data is stored at the end of the Array data on each PET in the order specified by the haloSeqIndexList argument (e.g. for PET 3 the halo information will be in the order 5,6,8 at the end of the piece of array on PET 3). This means that if the halo information needs to be in the order of nodes specified when you create the Mesh, then the nodes owned by another processor need to be at the end of the node information when the Mesh is created (e.g. when creating the piece of the Mesh on PET 3, then nodes 5,6,8 would need to be at the end of the node information lists).

At this point haloing could be done on the ESMF Array by using the `ESMF_ArrayHaloStore()` call followed by `ESMF_ArrayHalo()`. However, in this example we wrap the Array in an ESMF Field. This allows it to be used in Field specific calls (e.g. `ESMF_FieldRegridStore()`) as well as for haloing.

```
  ! Wrap the ESMF Array in a Field created on the nodes of the Mesh.
  field=ESMF_FieldCreate(mesh, array=array, &
       meshLoc=ESMF_MESHLOC_NODE, rc=localrc)
```

We can now proceed with haloing the Field by using the `ESMF_FieldHaloStore()` call to create a RouteHandle, and then the `ESMF_FieldHalo()` call to apply the RouteHandle. Note that once the RouteHandle has been created it can be applied repeatedly to redo the halo communication as data changes in the Field.

```
  ! Create the RouteHandle for the halo communication.
  call ESMF_FieldHaloStore(field, routehandle=haloHandle, rc=localrc)

  ! Can repeatedly do halo as data in field changes.
  ! do t=...

    ! Data set in non-halo field locations.
```

```
    ! Do the halo communication.
    call ESMF_FieldHalo(field, routehandle=haloHandle, rc=localrc)

    ! Halo locations now filled in field.

  ! enddo

  ! After its last use the RouteHandle can be released.
  call ESMF_FieldHaloRelease(haloHandle, rc=localrc)


  ! The Field can now be destroyed.
  call ESMF_FieldDestroy(field, rc=localrc)

  ! The Array can now be destroyed.
  call ESMF_ArrayDestroy(array, rc=localrc)
```

34.4 Class API

34.4.1 ESMF_MeshAssignment(=) - Mesh assignment

INTERFACE:

```
interface assignment(=)
mesh1 = mesh2
```

ARGUMENTS:

```
type(ESMF_Mesh) :: mesh1
type(ESMF_Mesh) :: mesh2
```

STATUS:

- This interface is backward compatible with ESMF versions starting at 5.2.0r. If code using this interface compiles with any version of ESMF starting with 5.2.0r, then it will compile with the current version.

DESCRIPTION:

Assign mesh1 as an alias to the same ESMF Mesh object in memory as mesh2. If mesh2 is invalid, then mesh1 will be equally invalid after the assignment.

The arguments are:

mesh1 The `ESMF_Mesh` object on the left hand side of the assignment.

mesh2 The `ESMF_Mesh` object on the right hand side of the assignment.

34.4.2 ESMF_MeshOperator(==) - Mesh equality operator

INTERFACE:

```
interface operator(==)
 if (mesh1 == mesh2) then ... endif
           OR
 result = (mesh1 == mesh2)
```

RETURN VALUE:

```
logical :: result
```

ARGUMENTS:

```
type(ESMF_Mesh), intent(in) :: mesh1
type(ESMF_Mesh), intent(in) :: mesh2
```

STATUS:

- This interface is backward compatible with ESMF versions starting at 5.2.0r. If code using this interface compiles with any version of ESMF starting with 5.2.0r, then it will compile with the current version.

DESCRIPTION:

Test whether mesh1 and mesh2 are valid aliases to the same ESMF Mesh object in memory. For a more general comparison of two ESMF Meshes, going beyond the simple alias test, the ESMF_MeshMatch() function (not yet implemented) must be used.

The arguments are:

mesh1 The `ESMF_Mesh` object on the left hand side of the equality operation.

mesh2 The `ESMF_Mesh` object on the right hand side of the equality operation.

34.4.3 ESMF_MeshOperator(/=) - Mesh not equal operator

INTERFACE:

```
interface operator(/=)
  if (mesh1 /= mesh2) then ... endif
           OR
  result = (mesh1 /= mesh2)
```

RETURN VALUE:

```
logical :: result
```

ARGUMENTS:

```
type(ESMF_Mesh), intent(in) :: mesh1
type(ESMF_Mesh), intent(in) :: mesh2
```

STATUS:

- This interface is backward compatible with ESMF versions starting at 5.2.0r. If code using this interface compiles with any version of ESMF starting with 5.2.0r, then it will compile with the current version.

DESCRIPTION:

Test whether mesh1 and mesh2 are *not* valid aliases to the same ESMF Mesh object in memory. For a more general comparison of two ESMF Meshes, going beyond the simple alias test, the ESMF_MeshMatch() function (not yet implemented) must be used.

The arguments are:

mesh1 The `ESMF_Mesh` object on the left hand side of the non-equality operation.

mesh2 The `ESMF_Mesh` object on the right hand side of the non-equality operation.

34.4.4 ESMF_MeshAddElements - Add elements to a Mesh

INTERFACE:

```
subroutine ESMF_MeshAddElements(mesh, elementIds, elementTypes, &
             elementConn, elementMask, elementArea, elementCoords, &
             elementDistgrid, rc)
```

ARGUMENTS:

```
type(ESMF_Mesh),     intent(inout)          :: mesh
integer,             intent(in)             :: elementIds(:)
integer,             intent(in)             :: elementTypes(:)
integer,             intent(in)             :: elementConn(:)
integer,             intent(in),  optional :: elementMask(:)
real(ESMF_KIND_R8), intent(in),  optional :: elementArea(:)
real(ESMF_KIND_R8), intent(in),  optional :: elementCoords(:)
type(ESMF_DistGrid), intent(in), optional :: elementDistgrid
integer,             intent(out), optional :: rc
```

DESCRIPTION:

This call is the third and last part of the three part mesh create sequence and should be called after the mesh is created with `ESMF_MeshCreate()` (34.4.6) and after the nodes are added with `ESMF_MeshAddNodes()` (34.4.5). This call adds the elements to the mesh and finalizes the create. After this call the Mesh is usable, for example a Field may be built on the created Mesh object and this Field may be used in a `ESMF_FieldRegridStore()` call.

The parameters to this call `elementIds`, `elementTypes`, and `elementConn` describe the elements to be created. The description for a particular element lies at the same index location in `elementIds` and `elementTypes`. Each entry in `elementConn` consists of the list of nodes used to create that element, so the connections for element e in the `elementIds` array will start at $number\_of\_nodes\_in\_element(1) + number\_of\_nodes\_in\_element(2) + \cdots + number\_of\_nodes\_in\_element(e-1) + 1$ in `elementConn`.

This call is *collective* across the current VM.

elementIds An array containing the global ids of the elements to be created on this PET. This input consists of a 1D array the size of the number of elements on this PET. Each element id must be a number equal to or greater than 1. An id should be unique in the sense that different elements must have different ids (the same element that appears on different processors must have the same id). There may be gaps in the sequence of ids, but if these gaps are the same scale as the length of the sequence it can lead to inefficiencies when the Mesh is used (e.g. in `ESMF_FieldRegridStore()`).

elementTypes An array containing the types of the elements to be created on this PET. The types used must be appropriate for the parametric dimension of the Mesh. Please see Section 34.2.1 for the list of options. This input consists of a 1D array the size of the number of elements on this PET.

elementConn An array containing the indexes of the sets of nodes to be connected together to form the elements to be created on this PET. The entries in this list are NOT node global ids, but rather each entry is a local index (1 based) into the list of nodes which were created on this PET by the previous `ESMF_MeshAddNodes()` call. In other words, an entry of 1 indicates that this element contains the node described by `nodeIds(1)`, `nodeCoords(1)`, etc. passed into the `ESMF_MeshAddNodes()` call on this PET. It is also important to note that the order of the nodes in an element connectivity list matters. Please see Section 34.2.1 for diagrams illustrating the correct order of nodes in a element. This input consists of a 1D array with a total size equal to the sum of the number of nodes in each element on this PET. The number of nodes in each element is implied by its element type in `elementTypes`. The nodes for each element are in sequence in this array (e.g. the nodes for element 1 are elementConn(1), elementConn(2), etc.).

[elementMask] An array containing values which can be used for element masking. Which values indicate masking are chosen via the `srcMaskValues` or `dstMaskValues` arguments to `ESMF_FieldRegridStore()` call. This input consists of a 1D array the size of the number of elements on this PET.

[elementArea] An array containing element areas. If not specified, the element areas are internally calculated. This input consists of a 1D array the size of the number of elements on this PET. **NOTE:** ESMF doesn't currently do unit conversion on areas. If these areas are going to be used in a process that also involves the areas of another Grid or Mesh (e.g. conservative regridding), then it is the user's responsibility to make sure that the area units are consistent between the two sides. If ESMF calculates an area on the surface of a sphere, then it is in units of square radians. If it calculates the area for a Cartesian grid, then it is in the same units as the coordinates, but squared.

[elementCoords] An array containing the physical coordinates of the elements to be created on this PET. This input consists of a 1D array the size of the number of elements on this PET times the Mesh's spatial dimension. The coordinates in this array are ordered so that the coordinates for an element lie in sequence in memory. (e.g. for a Mesh with spatial dimension 2, the coordinates for element 1 are in elementCoords(1) and elementCoords(2), the coordinates for element 2 are in elementCoords(3) and elementCoords(4), etc.). If not specified, the resulting Mesh won't have element coordinates.

[elementDistgrid] If present, use this as the element Distgrid for the Mesh. The passed in Distgrid needs to contain a local set of sequence indices matching the set of local element ids (i.e. those in `elementIds`). However, specifying an externally created Distgrid gives the user more control over aspects of the Distgrid containing those sequence indices (e.g. how they are broken into DEs). If not present, a 1D Distgrid will be created internally consisting of one DE per PET.

[rc] Return code; equals `ESMF_SUCCESS` if there are no errors.

34.4.5 ESMF_MeshAddNodes - Add nodes to a Mesh

INTERFACE:

```
subroutine ESMF_MeshAddNodes(mesh, nodeIds, nodeCoords, nodeOwners, &
                             nodeMask, nodalDistgrid, rc)
```

ARGUMENTS:

```
type(ESMF_Mesh),     intent(inout)          :: mesh
integer,             intent(in)             :: nodeIds(:)
real(ESMF_KIND_R8),  intent(in)             :: nodeCoords(:)
integer,             intent(in),  optional :: nodeOwners(:)
integer,             intent(in),  optional :: nodeMask(:)
type(ESMF_DistGrid), intent(in), optional :: nodalDistgrid
integer,             intent(out), optional :: rc
```

DESCRIPTION:

This call is the second part of the three part mesh create sequence and should be called after the mesh's dimensions are set using `ESMF_MeshCreate()` (34.4.6). This call adds the nodes to the mesh. The next step is to call `ESMF_MeshAddElements()` (34.4.4).

The parameters to this call `nodeIds`, `nodeCoords`, and `nodeOwners` describe the nodes to be created on this PET. The description for a particular node lies at the same index location in `nodeIds` and `nodeOwners`. Each entry in `nodeCoords` consists of spatial dimension coordinates, so the coordinates for node n in the `nodeIds` array will start at $(n-1) * spatialDim + 1$.

nodeIds An array containing the global ids of the nodes to be created on this PET. This input consists of a 1D array the size of the number of nodes on this PET. Each node id must be a number equal to or greater than 1. An id should be unique in the sense that different nodes must have different ids (the same node that appears on different processors must have the same id). There may be gaps in the sequence of ids, but if these gaps are the same scale as the length of the sequence it can lead to inefficiencies when the Mesh is used (e.g. in `ESMF_FieldRegridStore()`).

nodeCoords An array containing the physical coordinates of the nodes to be created on this PET. This input consists of a 1D array the size of the number of nodes on this PET times the Mesh's spatial dimension (`spatialDim`). The coordinates in this array are ordered so that the coordinates for a node lie in sequence in memory. (e.g. for a Mesh with spatial dimension 2, the coordinates for node 1 are in nodeCoords(1) and nodeCoords(2), the coordinates for node 2 are in nodeCoords(3) and nodeCoords(4), etc.).

[nodeOwners] An array containing the PETs that own the nodes to be created on this PET. If the node is shared with another PET, the value may be a PET other than the current one. Only nodes owned by this PET will have PET local entries in a Field created on the Mesh. This input consists of a 1D array the size of the number of nodes on this PET. If not provided by the user, then ESMF will calculate node ownership.

[nodeMask] An array containing values which can be used for node masking. Which values indicate masking are chosen via the `srcMaskValues` or `dstMaskValues` arguments to `ESMF_FieldRegridStore()` call. This input consists of a 1D array the size of the number of nodes on this PET.

[nodalDistgrid] If present, use this as the node Distgrid for the Mesh. The passed in Distgrid needs to contain a local set of sequence indices matching the set of local node ids (i.e. the ids in `nodeIds` with `nodeOwners` equal to the current PET). However, specifying an externally created Distgrid gives the user more control over aspects of the Distgrid containing those sequence indices (e.g. how they are broken into DEs). If not present, a 1D Distgrid will be created internally consisting of one DE per PET.

[rc] Return code; equals `ESMF_SUCCESS` if there are no errors.

34.4.6 ESMF_MeshCreate - Create a Mesh as a 3 step process

INTERFACE:

```
! Private name; call using ESMF_MeshCreate()
  function ESMF_MeshCreate3Part(parametricDim, spatialDim, coordSys, name, rc)
```

RETURN VALUE:

```
type(ESMF_Mesh)                                   :: ESMF_MeshCreate3Part
```

ARGUMENTS:

```
integer,                  intent(in)            :: parametricDim
integer,                  intent(in)            :: spatialDim
type(ESMF_CoordSys_Flag), intent(in),  optional :: coordSys
character(len=*),         intent(in),  optional :: name
integer,                  intent(out), optional :: rc
```

DESCRIPTION:

This call is the first part of the three part mesh create sequence. This call sets the dimension of the elements in the mesh (`parametricDim`) and the number of coordinate dimensions in the mesh (`spatialDim`). The next step is to call `ESMF_MeshAddNodes()` (34.4.5) to add the nodes and then `ESMF_MeshAddElements()` (34.4.4) to add the elements and finalize the mesh.

This call is *collective* across the current VM.

parametricDim Dimension of the topology of the Mesh. (E.g. a mesh constructed of squares would have a parametric dimension of 2, whereas a Mesh constructed of cubes would have one of 3.)

spatialDim The number of coordinate dimensions needed to describe the locations of the nodes making up the Mesh. For a manifold, the spatial dimension can be larger than the parametric dim (e.g. the 2D surface of a sphere in 3D space), but it can't be smaller.

[coordSys] The coordinate system of the grid coordinate data. For a full list of options, please see Section 55.11. If not specified then defaults to ESMF_COORDSYS_SPH_DEG.

[name] The name of the Mesh.

[rc] Return code; equals `ESMF_SUCCESS` if there are no errors.

34.4.7 ESMF_MeshCreate - Create a Mesh all at once

INTERFACE:

```
! Private name; call using ESMF_MeshCreate()
  function ESMF_MeshCreate1Part(parametricDim, spatialDim, &
                 nodeIds, nodeCoords, nodeOwners, nodeMask, nodalDistgrid, &
                 elementIds, elementTypes, elementConn, &
                 elementMask, elementArea, elementCoords, &
                 elementDistgrid, coordSys, name, rc)
```

RETURN VALUE:

```
type(ESMF_Mesh)                                  :: ESMF_MeshCreate1Part
```

ARGUMENTS:

```
integer,                  intent(in)            :: parametricDim
integer,                  intent(in)            :: spatialDim
integer,                  intent(in)            :: nodeIds(:)
real(ESMF_KIND_R8),       intent(in)            :: nodeCoords(:)
integer,                  intent(in),  optional :: nodeOwners(:)
integer,                  intent(in),  optional :: nodeMask(:)
type(ESMF_DistGrid),      intent(in),  optional :: nodalDistgrid
integer,                  intent(in)            :: elementIds(:)
integer,                  intent(in)            :: elementTypes(:)
integer,                  intent(in)            :: elementConn(:)
integer,                  intent(in),  optional :: elementMask(:)
real(ESMF_KIND_R8),       intent(in),  optional :: elementArea(:)
real(ESMF_KIND_R8),       intent(in),  optional :: elementCoords(:)
type(ESMF_DistGrid),      intent(in),  optional :: elementDistgrid
type(ESMF_CoordSys_Flag), intent(in),  optional :: coordSys
character(len=*),         intent(in),  optional :: name
integer,                  intent(out), optional :: rc
```

DESCRIPTION:

Create a Mesh object in one step. After this call the Mesh is usable, for example, a Field may be built on the created Mesh object and this Field may be used in a `ESMF_FieldRegridStore()` call.

This call sets the dimension of the elements in the mesh (`parametricDim`) and the number of coordinate dimensions in the mesh (`spatialDim`). It then creates the nodes, and then creates the elements by connecting together the nodes.

The parameters to this call `nodeIds`, `nodeCoords`, and `nodeOwners` describe the nodes to be created on this PET. The description for a particular node lies at the same index location in `nodeIds` and `nodeOwners`. Each entry in `nodeCoords` consists of spatial dimension coordinates, so the coordinates for node n in the `nodeIds` array will start at $(n-1) * spatialDim + 1$.

The parameters to this call `elementIds`, `elementTypes`, and `elementConn` describe the elements to be created. The description for a particular element lies at the same index location in `elementIds` and `elementTypes`. Each entry in `elementConn` consists of the list of nodes used to create that element, so the connections for element e in the `elementIds` array will start at $number\_of\_nodes\_in\_element(1) + number\_of\_nodes\_in\_element(2) + \cdots + number\_of\_nodes\_in\_element(e-1) + 1$ in `elementConn`.

This call is *collective* across the current VM.

parametricDim Dimension of the topology of the Mesh. (E.g. a mesh constructed of squares would have a parametric dimension of 2, whereas a Mesh constructed of cubes would have one of 3.)

spatialDim The number of coordinate dimensions needed to describe the locations of the nodes making up the Mesh. For a manifold, the spatial dimension can be larger than the parametric dim (e.g. the 2D surface of a sphere in 3D space), but it can't be smaller.

nodeIds An array containing the global ids of the nodes to be created on this PET. This input consists of a 1D array the size of the number of nodes on this PET. Each node id must be a number equal to or greater than 1. An id should be unique in the sense that different nodes must have different ids (the same node that appears on different processors must have the same id). There may be gaps in the sequence of ids, but if these gaps are the same scale as the length of the sequence it can lead to inefficiencies when the Mesh is used (e.g. in `ESMF_FieldRegridStore()`).

nodeCoords An array containing the physical coordinates of the nodes to be created on this PET. This input consists of a 1D array the size of the number of nodes on this PET times the Mesh's spatial dimension (`spatialDim`). The coordinates in this array are ordered so that the coordinates for a node lie in sequence in memory. (e.g. for a Mesh with spatial dimension 2, the coordinates for node 1 are in nodeCoords(1) and nodeCoords(2), the coordinates for node 2 are in nodeCoords(3) and nodeCoords(4), etc.).

[nodeOwners] An array containing the PETs that own the nodes to be created on this PET. If the node is shared with another PET, the value may be a PET other than the current one. Only nodes owned by this PET will have PET local entries in a Field created on the Mesh. This input consists of a 1D array the size of the number of nodes on this PET. If not provided by the user, then ESMF will calculate node ownership.

[nodeMask] An array containing values which can be used for node masking. Which values indicate masking are chosen via the `srcMaskValues` or `dstMaskValues` arguments to `ESMF_FieldRegridStore()` call. This input consists of a 1D array the size of the number of nodes on this PET.

[nodalDistgrid] If present, use this as the node Distgrid for the Mesh. The passed in Distgrid needs to contain a local set of sequence indices matching the set of local node ids (i.e. the ids in `nodeIds` with `nodeOwners` equal to the current PET). However, specifying an externally created Distgrid gives the user more control over aspects of the Distgrid containing those sequence indices (e.g. how they are broken into DEs). If not present, a 1D Distgrid will be created internally consisting of one DE per PET.

elementIds An array containing the global ids of the elements to be created on this PET. This input consists of a 1D array the size of the number of elements on this PET. Each element id must be a number equal to or greater than 1. An id should be unique in the sense that different elements must have different ids (the same element that appears on different processors must have the same id). There may be gaps in the sequence of ids, but if these gaps are the same scale as the length of the sequence it can lead to inefficiencies when the Mesh is used (e.g. in `ESMF_FieldRegridStore()`).

elementTypes An array containing the types of the elements to be created on this PET. The types used must be appropriate for the parametric dimension of the Mesh. Please see Section 34.2.1 for the list of options. This input consists of a 1D array the size of the number of elements on this PET.

elementConn An array containing the indexes of the sets of nodes to be connected together to form the elements to be created on this PET. The entries in this list are NOT node global ids, but rather each entry is a local index (1 based) into the list of nodes to be created on this PET by this call. In other words, an entry of 1 indicates that this element contains the node described by `nodeIds(1)`, `nodeCoords(1)`, etc. on this PET. It is also important to note that the order of the nodes in an element connectivity list matters. Please see Section 34.2.1 for diagrams illustrating the correct order of nodes in a element. This input consists of a 1D array with a total size equal to the sum of the number of nodes contained in each element on this PET. The number of nodes in each element is implied by its element type in `elementTypes`. The nodes for each element are in sequence in this array (e.g. the nodes for element 1 are elementConn(1), elementConn(2), etc.).

[elementMask] An array containing values which can be used for element masking. Which values indicate masking are chosen via the `srcMaskValues` or `dstMaskValues` arguments to `ESMF_FieldRegridStore()` call. This input consists of a 1D array the size of the number of elements on this PET.

[elementArea] An array containing element areas. If not specified, the element areas are internally calculated. This input consists of a 1D array the size of the number of elements on this PET. **NOTE:** ESMF doesn't currently do unit conversion on areas. If these areas are going to be used in a process that also involves the areas of another Grid or Mesh (e.g. conservative regridding), then it is the user's responsibility to make sure that the area units are consistent between the two sides. If ESMF calculates an area on the surface of a sphere, then it is in units of square radians. If it calculates the area for a Cartesian grid, then it is in the same units as the coordinates, but squared.

[elementCoords] An array containing the physical coordinates of the elements to be created on this PET. This input consists of a 1D array the size of the number of elements on this PET times the Mesh's spatial dimension (`spatialDim`). The coordinates in this array are ordered so that the coordinates for an element lie in sequence in memory. (e.g. for a Mesh with spatial dimension 2, the coordinates for element 1 are in elementCoords(1) and elementCoords(2), the coordinates for element 2 are in elementCoords(3) and elementCoords(4), etc.). If not specified, the resulting Mesh won't have element coordinates.

[elementDistgrid] If present, use this as the element Distgrid for the Mesh. The passed in Distgrid needs to contain a local set of sequence indices matching the set of local element ids (i.e. those in `elementIds`). However, specifying an externally created Distgrid gives the user more control over aspects of the Distgrid containing those sequence indices (e.g. how they are broken into DEs). If not present, a 1D Distgrid will be created internally consisting of one DE per PET.

[coordSys] The coordinate system of the grid coordinate data. For a full list of options, please see Section 55.11. If not specified then defaults to ESMF_COORDSYS_SPH_DEG.

[name] The name of the Mesh.

[rc] Return code; equals `ESMF_SUCCESS` if there are no errors.

34.4.8 ESMF_MeshCreate - Create a Mesh from a Grid

INTERFACE:

```
! Private name; call using ESMF_MeshCreate()
  function ESMF_MeshCreateFromGrid(grid, name, rc)
```

RETURN VALUE:

```
type(ESMF_Mesh)          :: ESMF_MeshCreateFromGrid
```

ARGUMENTS:

```
type(ESMF_Grid),         intent(in)            :: grid
character(len=*),        intent(in),  optional :: name
integer,                 intent(out), optional :: rc
```

DESCRIPTION:

Create an ESMF Mesh from an ESMF Grid. This method creates the elements of the Mesh from the cells of the Grid, and the nodes of the Mesh from the corners of the Grid. Corresponding locations in the Grid and new Mesh will have the same coordinates, sequence indices, masking, and area information.

This method currently only works for 2D Grids. In addition, this method requires the input Grid to have coordinates in the corner stagger location.

grid The ESMF Grid from which to create the Mesh.

[name] The name of the Mesh.

[rc] Return code; equals `ESMF_SUCCESS` if there are no errors.

34.4.9 ESMF_MeshCreate - Create a Mesh from a file

INTERFACE:

```
! Private name; call using ESMF_MeshCreate()
  function ESMF_MeshCreateFromFile(filename, fileformat, &
               convertToDual, addUserArea, maskFlag, varname, &
               nodalDistgrid, elementDistgrid, &
               coordSys, name, rc)
```

RETURN VALUE:

```
     type(ESMF_Mesh)         :: ESMF_MeshCreateFromFile
```

ARGUMENTS:

```
     character(len=*),           intent(in)            :: filename
     type(ESMF_FileFormat_Flag), intent(in)            :: fileformat
 -- The following arguments require argument keyword syntax (e.g. rc=rc). --
     logical,                    intent(in),  optional :: convertToDual
     logical,                    intent(in),  optional :: addUserArea
     type(ESMF_MeshLoc),         intent(in),  optional :: maskFlag
     character(len=*),           intent(in),  optional :: varname
     type(ESMF_DistGrid),        intent(in),  optional :: nodalDistgrid
     type(ESMF_DistGrid),        intent(in),  optional :: elementDistgrid
     type(ESMF_CoordSys_Flag),   intent(in),  optional :: coordSys
     character(len=*),           intent(in),  optional :: name
     integer,                    intent(out), optional :: rc
```

DESCRIPTION:

Create a Mesh from a file. Provides options to convert to 3D and in the case of SCRIP format files, allows the dual of the mesh to be created.

This call is *collective* across the current VM.

filename The name of the grid file

fileformat The file format. The valid options are `ESMF_FILEFORMAT_SCRIP`, `ESMF_FILEFORMAT_ESMFMESH` and `ESMF_FILEFORMAT_UGRID`. Please see Section 55.20 for a detailed description of the options.

[convertToDual] if `.true.`, the mesh will be converted to its dual. If not specified, defaults to `.false.`.

[addUserArea] if `.true.`, the cell area will be read in from the GRID file. This feature is only supported when the grid file is in the SCRIP or ESMF format. If not specified, defaults to `.false.`.

[maskFlag] If maskFlag is present, generate the mask using the missing_value attribute defined in 'varname' This flag is only supported when the grid file is in the UGRID format. The value could be either `ESMF_MESHLOC_NODE` or `ESMF_MESHLOC_ELEMENT`. If the value is `ESMF_MESHLOC_NODE`, the node mask will be generated and the variable has to be defined on the "node" (specified by its `location` attribute). If the value is `ESMF_MESHLOC_ELEMENT`, the element mask will be generated and the variable has to be defined on the "face" of the mesh. If the variable is not defined on the right location, no mask will be generated. If not specified, no mask will be generated.

[varname] If maskFlag is present, provide a variable name stored in the UGRID file and the mask will be generated using the missing value of the data value of this variable. The first two dimensions of the variable has to be the the longitude and the latitude dimension and the mask is derived from the first 2D values of this variable even if this data is 3D, or 4D array. If not specified, defaults to empty string.

[nodalDistgrid] A Distgrid describing the user-specified distribution of the nodes across the PETs.

[elementDistgrid] A Distgrid describing the user-specified distribution of the elements across the PETs.

[coordSys] The coordinate system in which to store the mesh coordinate data. If this setting doesn't match the coordinate system in the file, then the coordinates in the file will be converted to this system during mesh creation. It is currently an error to convert Cartesian file coordinates into a spherical coordinate system. For a full list of options, please see Section 55.11. If not specified, then defaults to the coordinate system in the file.

[name] The name of the Mesh.

[rc] Return code; equals `ESMF_SUCCESS` if there are no errors.

34.4.10 ESMF_MeshCreate - Create a copy of a Mesh with a new distribution

INTERFACE:

```
! Private name; call using ESMF_MeshCreate()
  function ESMF_MeshCreateRedist(mesh, nodalDistgrid, &
    elementDistgrid, vm, name, rc)
```

RETURN VALUE:

```
type(ESMF_Mesh)                              :: ESMF_MeshCreateRedist
```

ARGUMENTS:

```
     type(ESMF_Mesh),          intent(in)            :: mesh
 -- The following arguments require argument keyword syntax (e.g. rc=rc). --
     type(ESMF_DistGrid),      intent(in),  optional :: nodalDistgrid
     type(ESMF_DistGrid),      intent(in),  optional :: elementDistgrid
     type(ESMF_VM),            intent(in),  optional :: vm
     character(len=*),         intent(in),  optional :: name
     integer,                  intent(out), optional :: rc
```

DESCRIPTION:

Create a copy of an existing Mesh with a new distribution. Information in the Mesh such as connections, coordinates, areas, masks, etc. are automatically redistributed to the new Mesh. To redistribute data in Fields built on the original Mesh create a Field on the new Mesh and then use the Field redistribution functionality (`ESMF_FieldRedistStore()`, etc.). The equivalent methods can also be used for data in FieldBundles.

mesh The source Mesh to be redistributed.

[nodalDistgrid] A Distgrid describing the new distribution of the nodes across the PETs.

[elementDistgrid] A Distgrid describing the new distribution of the elements across the PETs.

[vm] If present, the Mesh object is created on the specified `ESMF_VM` object. The default is to create on the VM of the current context.

[name] The name of the Mesh.

[rc] Return code; equals `ESMF_SUCCESS` if there are no errors.

34.4.11 ESMF_MeshCreate - Create a Mesh of just one element type using corner coordinates

INTERFACE:

```
! Private name; call using ESMF_MeshCreate()
  function  ESMF_MeshCreateEasyElems1Type(parametricDim, coordSys, &
                 elementIds, elementType, elementCornerCoords, &
                 elementMask, elementArea, elementCoords, &
                 elementDistgrid, rc)
```

RETURN VALUE:

```
type(ESMF_Mesh) :: ESMF_MeshCreateEasyElems1Type
```

ARGUMENTS:

```
integer,                  intent(in)            :: parametricDim
type(ESMF_CoordSys_Flag), intent(in),  optional :: coordSys
integer,                  intent(in),  optional :: elementIds(:)
integer,                  intent(in)            :: elementType
real(ESMF_KIND_R8),       intent(in)            :: elementCornerCoords(:,:,:)
integer,                  intent(in),  optional :: elementMask(:)
real(ESMF_KIND_R8),       intent(in),  optional :: elementArea(:)
real(ESMF_KIND_R8),       intent(in),  optional :: elementCoords(:,:)
type(ESMF_DistGrid),      intent(in),  optional :: elementDistgrid
integer,                  intent(out), optional :: rc
```

DESCRIPTION:

Create a Mesh object in one step by just specifying the corner coordinates of each element. Internally these corners are turned into nodes forming the outside edges of the elements. This call assumes that each element is the same type to make the specification of the elements a bit easier. After this call the Mesh is usable, for example, a Field may be built on the created Mesh object and this Field may be used in `ESMF_FieldRegridStore()`. However, the Mesh created by this call consists of a set of disconnected elements, and so shouldn't be used in a situation where connections between elements are necessary (e.g. bilinear regridding on element centers, patch regridding, or second-order conservative regridding).

This call sets the dimension of the elements in the Mesh via `parametricDim` and the number of coordinate dimensions in the mesh is determined from the first dimension of `elementCornerCoords`.

The parameters to this call `elementIds`, `elementTypes`, and `elementCornerCoords` describe the elements to be created. The description for a particular element lies at the same index location in `elementIds` and `elementTypes`. The argument `elementCornerCoords` contains the coordinates of the corners used to create each element. The first dimension of this argument are across the coordinate dimensions. The second dimension of this argument is across the corners of a particular element. The last dimension of this argument is across the list of elements on this PET, so the coordinates of corner c in element e on this PET would be in `elementCornerCoords(:,c,e)`.

This call is *collective* across the current VM.

parametricDim Dimension of the topology of the Mesh. (E.g. a mesh constructed of squares would have a parametric dimension of 2, whereas a Mesh constructed of cubes would have one of 3.)

[coordSys] The coordinate system of the grid coordinate data. For a full list of options, please see Section 55.11. If not specified then defaults to ESMF_COORDSYS_SPH_DEG.

[elementIds] An array containing the global ids of the elements to be created on this PET. This input consists of a 1D array the size of the number of elements on this PET. Each element id must be a number equal to or greater than 1. An id should be unique in the sense that different elements must have different ids (the same element that appears on different processors must have the same id). There may be gaps in the sequence of ids, but if these gaps are the same scale as the length of the sequence it can lead to inefficiencies when the Mesh is used (e.g. in `ESMF_FieldRegridStore()`). If not specified, then elements are numbered in sequence starting with the first element on PET 0.

elementType An variable containing the type of the elements to be created in this Mesh. The type used must be appropriate for the parametric dimension of the Mesh. Please see Section 34.2.1 for the list of options.

elementCornerCoords A 3D array containing the coordinates of the corners of the elements to be created on this PET. The first dimension of this array is for the coordinates and should be of size 2 or 3. The size of this dimension will be used to determine the spatialDim of the Mesh. The second dimension is the number of corners for an element. The third dimension is a list of all the elements on this PET.

[elementMask] An array containing values which can be used for element masking. Which values indicate masking are chosen via the `srcMaskValues` or `dstMaskValues` arguments to `ESMF_FieldRegridStore()` call. This input consists of a 1D array the size of the number of elements on this PET.

[elementArea] An array containing element areas. If not specified, the element areas are internally calculated. This input consists of a 1D array the size of the number of elements on this PET. **NOTE:** ESMF doesn't currently do unit conversion on areas. If these areas are going to be used in a process that also involves the areas of another Grid or Mesh (e.g. conservative regridding), then it is the user's responsibility to make sure that the area units are consistent between the two sides. If ESMF calculates an area on the surface of a sphere, then it is in units of square radians. If it calculates the area for a Cartesian grid, then it is in the same units as the coordinates, but squared.

[elementCoords] An array containing the physical coordinates of the elements to be created on this PET. This input consists of a 2D array with the first dimension that same size as the first dimension of `elementCornerCoords`. The second dimension should be the same size as the third dimension of `elementCornerCoords`. If not specified, the resulting Mesh won't have element coordinates.

[elementDistgrid] If present, use this as the element Distgrid for the Mesh. The passed in Distgrid needs to contain a local set of sequence indices matching the set of local element ids (i.e. those in `elementIds`). However, specifying an externally created Distgrid gives the user more control over aspects of the Distgrid containing those sequence indices (e.g. how they are broken into DEs). If not present, a 1D Distgrid will be created internally consisting of one DE per PET.

[rc] Return code; equals `ESMF_SUCCESS` if there are no errors.

34.4.12 ESMF_MeshCreate - Create a Mesh using element corner coordinates

INTERFACE:

```
! Private name; call using ESMF_MeshCreate()
  function  ESMF_MeshCreateEasyElemsGen(parametricDim, coordSys, &
                 elementIds, elementTypes, elementCornerCoords, &
                 elementMask, elementArea, elementCoords, &
                 elementDistgrid, rc)
```

RETURN VALUE:

```
type(ESMF_Mesh) :: ESMF_MeshCreateEasyElemsGen
```

ARGUMENTS:

```
integer,                  intent(in)            :: parametricDim
type(ESMF_CoordSys_Flag), intent(in),  optional :: coordSys
integer,                  intent(in),  optional :: elementIds(:)
integer,                  intent(in)            :: elementTypes(:)
real(ESMF_KIND_R8),       intent(in)            :: elementCornerCoords(:,:)
integer,                  intent(in),  optional :: elementMask(:)
real(ESMF_KIND_R8),       intent(in),  optional :: elementArea(:)
real(ESMF_KIND_R8),       intent(in),  optional :: elementCoords(:,:)
type(ESMF_DistGrid),      intent(in),  optional :: elementDistgrid
integer,                  intent(out), optional :: rc
```

DESCRIPTION:

Create a Mesh object in one step by just specifying the corner coordinates of each element. Internally these corners are turned into nodes forming the outside edges of the elements. After this call the Mesh is usable, for example, a Field may be built on the created Mesh object and this Field may be used in `ESMF_FieldRegridStore()`. However, the Mesh created by this call consists of a set of disconnected elements, and so shouldn't be used in a situation where connections between elements are necessary (e.g. bilinear regridding on element centers, patch regridding, or second-order conservative regridding).

This call sets the dimension of the elements in the Mesh via `parametricDim` and the number of coordinate dimensions in the mesh is determined from the first dimension of `elementCornerCoords`.

The parameters to this call `elementIds`, `elementTypes`, and `elementCornerCoords` describe the elements to be created. The description for a particular element lies at the same index location in `elementIds` and `elementTypes`. The argument `elementCornerCoords` consists of a list of all

the corners used to create all the elements, so the corners for element e in the `elementTypes` array will start at $number\_of\_corners\_in\_element(1) + number\_of\_corners\_in\_element(2) + \cdots + number\_of\_corners\_in\_element(e-1) + 1$ in `elementCornerCoords`.

This call is *collective* across the current VM.

parametricDim Dimension of the topology of the Mesh. (E.g. a mesh constructed of squares would have a parametric dimension of 2, whereas a Mesh constructed of cubes would have one of 3.)

[coordSys] The coordinate system of the grid coordinate data. For a full list of options, please see Section 55.11. If not specified then defaults to ESMF_COORDSYS_SPH_DEG.

[elementIds] An array containing the global ids of the elements to be created on this PET. This input consists of a 1D array the size of the number of elements on this PET. Each element id must be a number equal to or greater than 1. An id should be unique in the sense that different elements must have different ids (the same element that appears on different processors must have the same id). There may be gaps in the sequence of ids, but if these gaps are the same scale as the length of the sequence it can lead to inefficiencies when the Mesh is used (e.g. in `ESMF_FieldRegridStore()`). If not specified, then elements are numbered in sequence starting with the first element on PET 0.

elementTypes An array containing the types of the elements to be created on this PET. The types used must be appropriate for the parametric dimension of the Mesh. Please see Section 34.2.1 for the list of options. This input consists of a 1D array the size of the number of elements on this PET.

elementCornerCoords A 2D array containing the coordinates of the corners of the elements to be created on this PET. The first dimension of this array is for the coordinates and should be of size 2 or 3. The size of this dimension will be used to determine the spatialDim of the Mesh. The second dimension is a collapsed list of all the corners in all the elements. The list of corners has been collapsed to 1D to enable elements with different number of corners to be supported in the same list without wasting space. The number of corners in each element is implied by its element type in `elementTypes`. The corners for each element are in sequence in this array (e.g. If element 1 has 3 corners then they are in elementCornerCoords(:,1), elementCornerCoords(:,2), elementCornerCoords(:,3) and the corners for the next element start in elementCornerCoords(:,4)).

[elementMask] An array containing values which can be used for element masking. Which values indicate masking are chosen via the `srcMaskValues` or `dstMaskValues` arguments to `ESMF_FieldRegridStore()` call. This input consists of a 1D array the size of the number of elements on this PET.

[elementArea] An array containing element areas. If not specified, the element areas are internally calculated. This input consists of a 1D array the size of the number of elements on this PET. **NOTE:** ESMF doesn't currently do unit conversion on areas. If these areas are going to be used in a process that also involves the areas of another Grid or Mesh (e.g. conservative regridding), then it is the user's responsibility to make sure that the area units are consistent between the two sides. If ESMF calculates an area on the surface of a sphere, then it is in units of square radians. If it calculates the area for a Cartesian grid, then it is in the same units as the coordinates, but squared.

[elementCoords] An array containing the physical coordinates of the elements to be created on this PET. This input consists of a 2D array with the first dimension that same size as the first dimension of `elementCornerCoords`. The second dimension should be the same size as the `elementTypes` argument. If not specified, the resulting Mesh won't have element coordinates.

[elementDistgrid] If present, use this as the element Distgrid for the Mesh. The passed in Distgrid needs to contain a local set of sequence indices matching the set of local element ids (i.e. those in `elementIds`). However, specifying an externally created Distgrid gives the user more control over aspects of the Distgrid containing those sequence indices (e.g. how they are broken into DEs). If not present, a 1D Distgrid will be created internally consisting of one DE per PET.

[rc] Return code; equals `ESMF_SUCCESS` if there are no errors.

34.4.13 ESMF_MeshCreateCubedSphere - Create a Mesh representation of a cubed sphere grid

INTERFACE:

```
function ESMF_MeshCreateCubedSphere(tileSize, nx, ny, name, rc)
```

RETURN VALUE:

```
type(ESMF_Mesh)         :: ESMF_MeshCreateCubedSphere
```

ARGUMENTS:

```
integer,                  intent(in)            :: tileSize
integer,                  intent(in)            :: nx
integer,                  intent(in)            :: ny
character(len=*),         intent(in),  optional :: name
integer,                  intent(out), optional :: rc
```

DESCRIPTION:

Create a `ESMF_Mesh` object for a cubed sphere grid using identical regular decomposition for every tile. The grid coordinates are generated based on the algorithm used by GEOS-5, The tile resolution is defined by `tileSize`. Each tile is decomposed into nx x ny blocks and the total number of DEs used is nx x ny x 6. If the total PET is not equal to the number of DEs, the DEs are distributed into PETs in the default cyclic distribution. Internally, the nodes and the elements from multiple DEs are collapsed into a 1D array. Therefore, the nodal distgrid or the element distgrid attached to the Mesh object is always a one DE arbitrarily distributed distgrid. The sequential indices of the nodes and the elements are derived based on the location of the point in the Cubed Sphere grid. If an element is located at `(x, y)` of tile `n`. Its sequential index would be `(n-1)*tileSize*tileSize+(y-1)*tileSize+x`. If it is a node, its sequential index would be `(n-1)*(tileSize+1)*(tileSize+1)+(y-1)*(tileSize+1)+x`.

The arguments are:

tilesize The number of elements on each side of the tile of the Cubed Sphere grid

nx The number of blocks on the horizontal size of each tile

ny The number of blocks on the vertical size of each tile

[name] The name of the Mesh.

[rc] Return code; equals `ESMF_SUCCESS` if there are no errors.

34.4.14 ESMF_MeshDestroy - Release resources associated with a Mesh

INTERFACE:

```
subroutine ESMF_MeshDestroy(mesh, noGarbage, rc)
```

RETURN VALUE:

ARGUMENTS:

```
     type(ESMF_Mesh), intent(inout)          :: mesh
 -- The following arguments require argument keyword syntax (e.g. rc=rc). --
     logical,         intent(in),   optional :: noGarbage
     integer,         intent(out),  optional :: rc
```

STATUS:

- This interface is backward compatible with ESMF versions starting at 5.2.0r. If code using this interface compiles with any version of ESMF starting with 5.2.0r, then it will compile with the current version.
- This interface was modified since ESMF version 5.2.0r. The fact that code using this interface compiles with the current ESMF version does not guarantee that it compiles with previous versions of this interface. If user code compatibility with version 5.2.0r is desired then care must be taken to limit the use of this interface to features that were available in the 5.2.0r release.
  Changes made after the 5.2.0r release:

  8.1.0 Added argument `noGarbage`. The argument provides a mechanism to override the default garbage collection mechanism when destroying an ESMF object.

DESCRIPTION:

This call removes internal memory associated with `mesh`. After this call `mesh` will no longer be usable. ! ! The arguments are:

mesh Mesh object to be destroyed.

[noGarbage] If set to `.TRUE.` the object will be fully destroyed and removed from the ESMF garbage collection system. Note however that under this condition ESMF cannot protect against accessing the destroyed object through dangling aliases – a situation which may lead to hard to debug application crashes.

It is generally recommended to leave the `noGarbage` argument set to `.FALSE.` (the default), and to take advantage of the ESMF garbage collection system which will prevent problems with dangling aliases or incorrect sequences of destroy calls. However this level of support requires that a small remnant of the object is kept in memory past the destroy call. This can lead to an unexpected increase in memory consumption over the course of execution in applications that use temporary ESMF objects. For situations where the repeated creation and destruction of temporary objects leads to memory issues, it is recommended to call with `noGarbage` set to `.TRUE.`, fully removing the entire temporary object from memory.

[rc] Return code; equals `ESMF_SUCCESS` if there are no errors.

34.4.15 ESMF_MeshEmptyCreate - Create a Mesh to hold Distgrid information

INTERFACE:

```
function ESMF_MeshEmptyCreate(nodalDistgrid, elementDistgrid, name, rc)
```

RETURN VALUE:

```
type(ESMF_Mesh)         :: ESMF_MeshEmptyCreate
```

ARGUMENTS:

```
type(ESMF_DistGrid),      intent(in),  optional :: elementdistgrid
type(ESMF_DistGrid),      intent(in),  optional :: nodalDistgrid
character(len=*),         intent(in),  optional :: name
integer,                  intent(out), optional :: rc
```

DESCRIPTION:

Create a Mesh to hold distribution information (i.e. Distgrids). Such a mesh will have no coordinate or connectivity information stored. Aside from holding distgrids the Mesh created by this call can't be used in other ESMF functionality (e.g. it can't be used to create a Field or in regridding).

[nodalDistgrid] The nodal distgrid.

[elementDistgrid] The elemental distgrid.

[name] The name of the Mesh.

[rc] Return code; equals `ESMF_SUCCESS` if there are no errors.

34.4.16 ESMF_MeshFreeMemory - Remove a Mesh and its memory

INTERFACE:

```
subroutine ESMF_MeshFreeMemory(mesh, rc)
```

RETURN VALUE:

ARGUMENTS:

```
type(ESMF_Mesh), intent(inout)        :: mesh
integer,         intent(out), optional :: rc
```

DESCRIPTION:

This call removes the portions of `mesh` which contain connection and coordinate information. After this call, Fields build on `mesh` will no longer be usable as part of an `ESMF_FieldRegridStore()` operation. However, after this call Fields built on `mesh` can still be used in an `ESMF_FieldRegrid()` operation if the routehandle was generated beforehand. New Fields may also be built on `mesh` after this call.

The arguments are:

mesh Mesh object whose memory is to be freed.

[rc] Return code; equals `ESMF_SUCCESS` if there are no errors.

34.4.17 ESMF_MeshGet - Get Mesh information

INTERFACE:

```
subroutine ESMF_MeshGet(mesh, parametricDim, spatialDim, &
             nodeCount, nodeIds, nodeCoords, nodeOwners, &
             nodeMaskIsPresent, nodeMask,&
             elementCount, elementIds, elementTypes, &
             elementConnCount, elementConn, &
             elementMaskIsPresent,elementMask, &
             elementAreaIsPresent, elementArea, &
             elementCoordsIsPresent, elementCoords, &
             nodalDistgridIsPresent, nodalDistgrid, &
             elementDistgridIsPresent, elementDistgrid, &
             numOwnedNodes, ownedNodeCoords, &
             numOwnedElements, ownedElemCoords, &
             elemMaskArray, elemAreaArray, &
             isMemFreed, coordSys, status, name, rc)
```

RETURN VALUE:

ARGUMENTS:

```
type(ESMF_Mesh),          intent(in)            :: mesh
integer,                  intent(out), optional :: parametricDim
integer,                  intent(out), optional :: spatialDim
integer,                  intent(out), optional :: nodeCount
integer,                  intent(out), optional :: nodeIds(:)
real(ESMF_KIND_R8),       intent(out), optional :: nodeCoords(:)
integer,                  intent(out), optional :: nodeOwners(:)
logical,                  intent(out), optional :: nodeMaskIsPresent
integer,                  intent(out), optional :: nodeMask(:)
integer,                  intent(out), optional :: elementCount
integer,                  intent(out), optional :: elementIds(:)
integer,                  intent(out), optional :: elementTypes(:)
integer,                  intent(out), optional :: elementConnCount
integer,                  intent(out), optional :: elementConn(:)
logical,                  intent(out), optional :: elementMaskIsPresent
integer,                  intent(out), optional :: elementMask(:)
logical,                  intent(out), optional :: elementAreaIsPresent
real(ESMF_KIND_R8),       intent(out), optional :: elementArea(:)
logical,                  intent(out), optional :: elementCoordsIsPresent
real(ESMF_KIND_R8),       intent(out), optional :: elementCoords(:)
logical,                  intent(out), optional :: nodalDistgridIsPresent
```

```
type(ESMF_DistGrid),      intent(out), optional :: nodalDistgrid
logical,                  intent(out), optional :: elementDistgridIsPresent
type(ESMF_DistGrid),      intent(out), optional :: elementDistgrid
integer,                  intent(out), optional :: numOwnedNodes
real(ESMF_KIND_R8),       intent(out), optional :: ownedNodeCoords(:)
integer,                  intent(out), optional :: numOwnedElements
real(ESMF_KIND_R8),       intent(out), optional :: ownedElemCoords(:)
logical,                  intent(out), optional :: isMemFreed
type(ESMF_Array),         intent(inout), optional :: elemMaskArray
type(ESMF_Array),         intent(inout), optional :: elemAreaArray
type(ESMF_CoordSys_Flag), intent(out), optional :: coordSys
type(ESMF_MeshStatus_Flag),intent(out), optional :: status
character(len=*),         intent(out), optional :: name
integer,                  intent(out), optional :: rc
```

DESCRIPTION:

Get various information from a mesh.

The arguments are:

mesh Mesh object to retrieve information from.

[parametricDim] Dimension of the topology of the Mesh. (E.g. a mesh constructed of squares would have a parametric dimension of 2, whereas a Mesh constructed of cubes would have one of 3.)

[spatialDim] The number of coordinate dimensions needed to describe the locations of the nodes making up the Mesh. For a manifold, the spatial dimension can be larger than the parametric dim (e.g. the 2D surface of a sphere in 3D space), but it can't be smaller.

[nodeCount] The number of local nodes in the mesh (both owned and shared with another PET).

[nodeIds] An array of ids for each local node in the mesh. The nodeIds array should be of size nodeCount.

[nodeCoords] An array of coordinates for each local node in the mesh. The nodeCoords array should be of size (spatialDim*nodeCount).

[nodeOwners] An array of the PET numbers that own each local node in the mesh. The nodeOwners array should be of size nodeCount.

[nodeMaskIsPresent] .true. if node masking was set in mesh, .false. otherwise.

[nodeMask] An array of mask values for each local node in the mesh. The nodeOwners array should be of size nodeCount.

[elementCount] The number of local elements in the mesh (both owned and shared with another PET).

[elementIds] An array of ids for each local element in the mesh. The elementIds array should be of size elementCount.

[elementTypes] An array of types for each local element in the mesh. Please see section 34.2.1 for the list of options. The elementTypes array should be of size elementCount.

[elementConnCount] The number of entries elementConn array. Provided as a convenience.

elementConn An array containing the indexes of the sets of nodes to be connected together to form the elements to be created on this PET. The entries in this list are NOT node global ids, but rather each entry is a local index (1 based) into the list of nodes to be created on this PET by this call. In other words, an entry of 1 indicates that this element contains the node described by `nodeIds(1)`, `nodeCoords(1)`, etc. on this PET. It is also important to note that the order of the nodes in an element connectivity list matters. Please see Section 34.2.1 for diagrams

illustrating the correct order of nodes in a element. This input consists of a 1D array with a total size equal to the sum of the number of nodes contained in each element on this PET (also provided by elementConnCount). The number of nodes in each element is implied by its element type in `elementTypes`. The nodes for each element are in sequence in this array (e.g. the nodes for element 1 are elementConn(1), elementConn(2), etc.).

[elementMaskIsPresent] .true. if element masking was set in mesh, .false. otherwise.

[elementMask] An array of mask values for each local element in the mesh. The elementMask array should be of size elementCount.

[elementAreaIsPresent] .true. if element areas were set in mesh, .false. otherwise.

[elementArea] An array of area values for each local element in the mesh. The elementArea array should be of size elementCount.

[elementCoordsIsPresent] .true. if element coordinates were set in mesh, .false. otherwise.

[elementCoords] An array of coordinate values for each local element in the mesh. The elementCoord array should be of size (spatialDim*elementCount).

[nodalDistgridIsPresent] .true. if nodalDistgrid was set in Mesh object, .false. otherwise.

[nodalDistgrid] A Distgrid describing the distribution of the nodes across the PETs. Note that on each PET the distgrid will only contain entries for nodes owned by that PET. This is the DistGrid that would be used to construct the Array in a Field that is constructed on `mesh`.

[elementDistgridIsPresent] .true. if elementDistgrid was set in Mesh object, .false. otherwise.

[elementDistgrid] A Distgrid describing the distribution of elements across the PETs. Note that on each PET the distgrid will only contain entries for elements owned by that PET.

[numOwnedNodes] The number of local nodes which are owned by this PET. This is the number of PET local entries in the nodalDistgrid.

[ownedNodeCoords] The coordinates for the local nodes. These coordinates will be in the proper order to correspond with the nodes in the `nodalDistgrid` returned by this call, and hence with a Field built on `mesh`. The size of the input array should be the spatial dim of `mesh` times `numOwnedNodes`.

[numOwnedElements] The number of local elements which are owned by this PET. Note that every element is owned by the PET it resides on, so unlike for nodes, `numOwnedElements` is identical to the number of elements on the PET. It is also the number of PET local entries in the elementDistgrid.

[ownedElemCoords] The center coordinates for the local elements. These coordinates will be in the proper order to correspond with the elements in the `elementDistgrid` returned by this call, and hence with a Field built on the center of `mesh`. The size of the input array should be the spatial dim of `mesh` times `numOwnedElements`.

[elemMaskArray] The mask information for elements put into an ESMF Array. The ESMF Array must be build on a DistGrid which matches the elementDistgrid.

[elemAreaArray] The area information for elements put into an ESMF Array. The ESMF Array must be build on a DistGrid which matches the elementDistgrid.

[isMemFreed] Indicates if the coordinate and connection memory been freed from `mesh`. If so, it can no longer be used as part of an `ESMF_FieldRegridStore()` call.

[coordSys] The coordinate system of the grid coordinate data.

[status] Flag indicating the status of the Mesh. Please see Section 55.43 for the list of options.

[name] Name of the Mesh object.

[rc] Return code; equals `ESMF_SUCCESS` if there are no errors.

34.4.18 ESMF_MeshGetMOAB – Check on status of using MOAB library internally.

INTERFACE:

```
subroutine ESMF_MeshGetMOAB(moabOn, rc)
```

ARGUMENTS:

```
logical, intent(out)                      :: moabOn
integer, intent(out), optional            :: rc
```

DESCRIPTION:

This method is only temporary. It was created to enable testing during the stage in ESMF development while we have two internal mesh implementations. At some point it will be removed.

This method can be used to check whether the MOAB library is being used to hold the internal structure of the Mesh. When set to .true. the following Mesh create calls create a Mesh using MOAB internally. When set to .false. the following Mesh create calls use the ESMF native internal mesh respresentation. Note that ESMF Meshes created on MOAB are only supported in a limited set of operations and should be used with caution as they haven't yet been tested as thoroughly as the native version. Also, operations that use a pair of Meshes (e.g. regrid weight generation) are only supported between meshes of the same type (e.g. you can regrid between two MOAB meshes, but not between a MOAB and a native mesh).

moabOn Output variable which indicates current state of MOAB.

[rc] Return code; equals `ESMF_SUCCESS` if there are no errors.

34.4.19 ESMF_MeshIsCreated - Check whether a Mesh object has been created

INTERFACE:

```
function ESMF_MeshIsCreated(mesh, rc)
```

RETURN VALUE:

```
logical :: ESMF_MeshIsCreated
```

ARGUMENTS:

```
     type(ESMF_Mesh), intent(in)            :: mesh
 -- The following arguments require argument keyword syntax (e.g. rc=rc). --
     integer,             intent(out), optional :: rc
```

DESCRIPTION:

Return `.true.` if the `mesh` has been created. Otherwise return `.false.`. If an error occurs, i.e. `rc /= ESMF_SUCCESS` is returned, the return value of the function will also be `.false.`.

The arguments are:

mesh `ESMF_Mesh` queried.

[rc] Return code; equals `ESMF_SUCCESS` if there are no errors.

34.4.20 ESMF_MeshSet - Set some Mesh information

INTERFACE:

```
subroutine ESMF_MeshSet(mesh, &
     elementMask, elementArea, rc)
```

RETURN VALUE:

ARGUMENTS:

```
type(ESMF_Mesh),          intent(in)             :: mesh
integer,                  intent(in), optional :: elementMask(:)
real(ESMF_KIND_R8),       intent(in), optional :: elementArea(:)
integer,                  intent(out), optional :: rc
```

DESCRIPTION:

This call allows the user to change the set of information that it's legal to alter after a mesh has been created. Currently, this call requires that the information has already been added to the mesh during creation. For example, you can only change the element mask information, if the mesh was initially created with element masking.

The arguments are:

mesh

[elementMask] An array of mask values for each local element in the mesh. The elementMask array should be of size elementCount.

[elementArea] An array of area values for each local element in the mesh. The elementArea array should be of size elementCount.

[rc] Return code; equals `ESMF_SUCCESS` if there are no errors.

34.4.21 ESMF_MeshSetMOAB – Toggle using the MOAB library internally.

INTERFACE:

```
subroutine ESMF_MeshSetMOAB(moabOn, rc)
```

ARGUMENTS:

```
logical, intent(in)                        :: moabOn
integer, intent(out) , optional            :: rc
```

DESCRIPTION:

This method is only temporary. It was created to enable testing during the stage in ESMF development while we have two internal mesh implementations. At some point it will be removed.

This method can be employed to turn on or off using the MOAB library to hold the internal structure of the Mesh. When set to .true. the following Mesh create calls create a Mesh using MOAB internally. When set to .false. the following Mesh create calls use the ESMF native internal mesh respresentation. Note that ESMF Meshes created on MOAB are only supported in a limited set of operations and should be used with caution as they haven't yet been tested as thoroughly as the native version. Also, operations that use a pair of Meshes (e.g. regrid weight generation) are only supported between meshes of the same type (e.g. you can regrid between two MOAB meshes, but not between a MOAB and a native mesh).

moabOn Variable used to turn MOAB on or off

[rc] Return code; equals `ESMF_SUCCESS` if there are no errors.

35 XGrid Class

35.1 Description

An exchange grid represents the 2D boundary layer usually between the atmosphere on one side and ocean and land on the other in an Earth system model. There are dynamical and thermodynamical processes on either side of the boundary layer and on the boundary layer itself. The boundary layer exchanges fluxes from either side and adjusts boundary conditions for the model components involved. For climate modeling, it is critical that the fluxes transferred by the boundary layer are conservative.

The ESMF exchange grid is implemented as the `ESMF_XGrid` class. Internally it's represented by a collection of the intersected cells between atmosphere and ocean/land[17] grids. These polygonal cells can have irregular shapes and can be broken down into triangles facilitating a finite element approach.

There are two ways to create an `ESMF_XGrid` object from user supplied information. The first way to create an `ESMF_XGrid` takes two lists of `ESMF_Grid` or `ESMF_Mesh` that represent the model component grids on either side of the exchange grid. From the two lists of `ESMF_Grid` or `ESMF_Mesh`, information required for flux exchange calculation between any pair of the model components from either side of the exchange grid is computed. In addition, the internal representation of the `ESMF_XGrid` is computed and can be optionally stored as an `ESMF_Mesh`. This internal representation is the collection of the intersected polygonal cells as a result of merged `ESMF_Mesh`es from both sides of the exchange grid. `ESMF_Field` can be created on the `ESMF_XGrid` and used for weight generation

and regridding as the internal representation in the ESMF_XGrid has a complete geometrical description of the exchange grid.

The second way to create an ESMF_XGrid requires users to supply all necessary information to compute communication routehandle. A later call to ESMF_FieldRegridStore() with the xgrid and source and destination ESMF_Fields computes the ESMF_Routehandle object for matrix multiply operation used in model remapping.

ESMF_XGrid deals with 2 distinctive kinds of fraction for each Grid or Mesh cell involved in its creation. The following description applies to both ESMF_Grid and ESMF_Mesh involved in the ESMF_XGrid creation process. The first fraction quantity f_1 is the same as defined in direct Field regrid between a source and destination ESMF_Field pair, namely the fraction of a total Grid cell area A that is used in weight generation. The second fraction quantity f_2 is a result of the Grid merging process when multiple ESMF_Grids or model components exist on one side of the exchange grid. To compute XGrid, the multiple ESMF_Grids are first merged together to form a super mesh. During the merging process, Grids that are of a higher priority clips into lower priority Grids, creating fractional cells in the lower priority Grids. Priority is a mechanism to resolve the claim of a surface region by multiple Grids. To conserve flux, any surface area can only be claimed by a unique Grid. This is a typical practice in earth system modelling, e.g. to handle land and ocean boundary.

In addition to the matrix multiply communication routehandle, ESMF_XGrid exports both f_1 and f_2 to the user through the ESMF_FieldRegridStore() method because each remapping pair has different f_1 and f_2 associated with it. f_2 from source Grid is folded directly in the calculated weight matrices since its used to calculate destination point flux density F. The global source flux is defined as $\sum_{g=1}^{g=n\_srcgrid} \sum_{s=1}^{s=n\_srccell} f_{1s} f_{2s} A_s F_s$. The global destination flux is defined as: $\sum_{g=1}^{g=n\_dstgrid} \sum_{d=1}^{d=n\_dstcell} \sum_{s=1}^{s=n\_intersect} (w_{sd} F_s) f_{2d} A_d$, w_{sd} is the f_2 modified weight intersecting s-th source Grid cell with d-th destination Grid cell. It can be proved that this formulation of the fractions and weight calculation ensures first order global conservation of flux $\mathcal{F}$ transferred from source grids to exchange grid, and from exchange grid to destination grids.

35.2 Constants

35.2.1 ESMF_XGRIDSIDE

DESCRIPTION:
Specify which side of the ESMF_XGrid the current operation is taking place.

The type of this flag is:

type(ESMF_XGridSide_Flag)

The valid values are:

ESMF_XGRIDSIDE_A A side of the eXchange Grid, corresponding to the A side of the Grids used to create an XGrid.

ESMF_XGRIDSIDE_B B side of the eXchange Grid, corresponding to the B side of the Grids used to create an XGrid.

ESMF_XGRIDSIDE_BALANCED The internally generated balanced side of the eXchange Grid in the middle.

35.3 Use and Examples

35.3.1 Create an XGrid from Grids then use it for regridding

An `ESMF_XGrid` object can be created from Grids on either side of the exchange grid. Internally the weight matrices and index mapping are computed and stored in the XGrid, along with other necessary information for flux exchange calculation between any pair of model components used for the XGrid creation.

In this example, we create an XGrid from overlapping Grids on either side of the XGrid. Then we perform a flux exchange from one side to the other side of the XGrid.

We start by creating the Grids on both sides and associate coordinates with the Grids on the corner stagger. The Grids use global indexing and padding for coordinates on the corner stagger.

For details of Grid creation and coordinate use, please refer to Grid class documentation: 32.3.2.

```
! First Grid on side A
sideA(1) = ESMF_GridCreateNoPeriDim(maxIndex=(/20, 20/), &
  indexflag=ESMF_INDEX_GLOBAL, &
  gridEdgeLWidth=(/0,0/), gridEdgeUWidth=(/1,1/), &
  name='source Grid 1 on side A', rc=localrc)

! Second Grid on side A
sideA(2) = ESMF_GridCreateNoPeriDim(maxIndex=(/20, 10/), &
  indexflag=ESMF_INDEX_GLOBAL, &
  gridEdgeLWidth=(/0,0/), gridEdgeUWidth=(/1,1/), &
  name='source Grid 2 on side A', rc=localrc)

! Allocate coordinates for Grid corner stagger
do i = 1, 2
  call ESMF_GridAddCoord(sideA(i), staggerloc=ESMF_STAGGERLOC_CORNER, &
      rc=localrc)

enddo
```

Assign coordinate for the Grids on sideA at corner stagger.

```
! SideA first grid spans (0-20, 0-20) with 1.0x1.0 degree resolution
! X corner
call ESMF_GridGetCoord(sideA(1), localDE=0, &
    staggerLoc=ESMF_STAGGERLOC_CORNER, coordDim=1, &
    farrayPtr=coordX, rc=localrc)

! Y corner
call ESMF_GridGetCoord(sideA(1), localDE=0, &
    staggerLoc=ESMF_STAGGERLOC_CORNER, coordDim=2, &
    farrayPtr=coordY, rc=localrc)

do i = lbound(coordX,1), ubound(coordX,1)
  do j = lbound(coordX, 2), ubound(coordX, 2)
    coordX(i,j) = (i-1)*1.0
    coordY(i,j) = (j-1)*1.0
  enddo
enddo
```

```
! SideA second grid spans (14.3-24.3, 14.2-24.2) with 0.5x1.0 degree
! resolution X corner
call ESMF_GridGetCoord(sideA(2), localDE=0, &
    staggerLoc=ESMF_STAGGERLOC_CORNER, coordDim=1, &
    farrayPtr=coordX, rc=localrc)

! Y corner
call ESMF_GridGetCoord(sideA(2), localDE=0, &
    staggerLoc=ESMF_STAGGERLOC_CORNER, coordDim=2, &
    farrayPtr=coordY, rc=localrc)

do i = lbound(coordX,1), ubound(coordX,1)
  do j = lbound(coordX, 2), ubound(coordX, 2)
    coordX(i,j) = 14.3+(i-1)*0.5
    coordY(i,j) = 14.2+(j-1)*1.0
  enddo
enddo
```

Create the destination grid on side B, only one Grid exists on side B. Also associate coordinate with the Grid:

```
sideB(1) = ESMF_GridCreateNoPeriDim(maxIndex=(/30, 30/), &
  indexflag=ESMF_INDEX_GLOBAL, &
  gridEdgeLWidth=(/0,0/), gridEdgeUWidth=(/1,1/), &
  name='source Grid 1 on side B', rc=localrc)

do i = 1, 1
  call ESMF_GridAddCoord(sideB(i), staggerloc=ESMF_STAGGERLOC_CORNER, &
      rc=localrc)

enddo

! SideB grid spans (0-30, 0-30) with 1.0x1.0 degree resolution
! X corner
call ESMF_GridGetCoord(sideB(1), localDE=0, &
    staggerLoc=ESMF_STAGGERLOC_CORNER, coordDim=1, &
    farrayPtr=coordX, rc=localrc)

! Y corner
call ESMF_GridGetCoord(sideB(1), localDE=0, &
    staggerLoc=ESMF_STAGGERLOC_CORNER, coordDim=2, &
    farrayPtr=coordY, rc=localrc)

do i = lbound(coordX,1), ubound(coordX,1)
  do j = lbound(coordX, 2), ubound(coordX, 2)
    coordX(i,j) = (i-1)*1.0
    coordY(i,j) = (j-1)*1.0
  enddo
enddo
```

Create an `ESMF_XGrid` object from the two lists of Grids on side A and B. In this example both Grids on side A overlaps with the Grid on side B. It's an error to have a Grid on either side that is spatially disjoint with the XGrid. Neither of the Grid on side A is identical to the Grid on side B. Calling the `ESMF_XGridCreate()` method is straightforward:

```
xgrid = ESMF_XGridCreate(sideAGrid=sideA, sideBGrid=sideB, rc=localrc)
```

Create an `ESMF_Field` on the XGrid:

```
field = ESMF_FieldCreate(xgrid, typekind=ESMF_TYPEKIND_R8, &
            rc=localrc)
```

Query the Field for its Fortran data pointer and its exclusive bounds:

```
call ESMF_FieldGet(field, farrayPtr=xfarrayPtr, &
    exclusiveLBound=xlb, exclusiveUBound=xub, rc=localrc)
```

Create src and dst Fields on side A and side B Grids.

```
do i = 1, 2
    srcField(i) = ESMF_FieldCreate(sideA(i), &
            typekind=ESMF_TYPEKIND_R8, rc=localrc)

enddo
do i = 1, 1
    dstField(i) = ESMF_FieldCreate(sideB(i), &
            typekind=ESMF_TYPEKIND_R8, rc=localrc)

enddo
```

The current implementation requires that Grids used to generate the XGrid must not match, i.e. they are different either topologically or geometrically or both. In this example, the first source Grid is topologically identical to the destination Grid but their geometric coordinates are different.

First we compute the regrid routehandles, these routehandles can be used repeatedly afterwards. Then we initialize the values in the Fields. Finally we execute the Regrid.

```
! Compute regrid routehandles. The routehandles can be used
! repeatedly afterwards.
! From A -> X
do i = 1, 2
  call ESMF_FieldRegridStore(xgrid, srcField(i), field, &
    routehandle=rh_src2xgrid(i), rc = localrc)

enddo
! from X -> B, retrieve the destination fraction Fields.
do i = 1, 1
  call ESMF_FieldRegridStore(xgrid, field, dstField(i), &
    dstFracField=dstFrac, dstMergeFracField=dstFrac2, &
    routehandle=rh_xgrid2dst(i), rc = localrc)

enddo

! Initialize values in the source Fields on side A
do i = 1, 2
  call ESMF_FieldGet(srcField(i), farrayPtr=farrayPtr, rc=localrc)
```

```
  farrayPtr = i
enddo
! Initialize values in the destination Field on XGrid
xfarrayPtr = 0.0
! Initialize values in the destination Field on Side B
do i = 1, 1
  call ESMF_FieldGet(dstField(i), farrayPtr=farrayPtr, rc=localrc)

  farrayPtr = 0.0
enddo
```

First we regrid from the Fields on side A to the Field on the XGrid:

```
! Execute regrid from A -> X
do i = 1, 2
  call ESMF_FieldRegrid(srcField(i), field, &
    routehandle=rh_src2xgrid(i), &
    zeroregion=ESMF_REGION_SELECT, rc = localrc)

enddo
```

Next we regrid from the Field on XGrid to the destination Field on side B:

```
! Execute the regrid store
do i = 1, 1
  call ESMF_FieldRegrid(field, dstField(i), &
    routehandle=rh_xgrid2dst(i), &
    rc = localrc)

enddo
```

After the regridding calls, the routehandle can be released by calling the `ESMF_FieldRegridRelease()` method.

```
do i = 1, 2
  call ESMF_FieldRegridRelease(routehandle=rh_src2xgrid(i), rc=localrc)

enddo
call ESMF_FieldRegridRelease(routehandle=rh_xgrid2dst(1), rc=localrc)
```

In the above example, we first set up all the required parameters to create an XGrid from user supplied input. Then we create Fields on the XGrid and the Grids on either side. Finally we use the `ESMF_FieldRegrid()` interface to perform a flux exchange from the source side to the destination side.

35.3.2 Using XGrid in Earth System modeling

A typical application in Earth System Modeling is to calculate flux exchange through the planetary boundary layer that can be represented by `ESMF_XGrid`. Atmosphere is above the planetary boundary layer while land and ocean are below the boundary layer. To create an XGrid, the land and ocean Grids that are usually different in resolution need to be merged first to create a super Mesh. This merging process is enabled through the support of masking.

The global land and ocean Grids need to be created with masking enabled. In practice, each Grid cell has an integer masking value attached to it. For examples using masking in `ESMF_Grid` please refer to section 32.3.17.

When calling the `ESMF_XGridCreate()` method, user can supply the optional arguments sideAMaskValues and sideBMaskValues. These arguments are one dimensional Fortran integer arrays. If any of the sideAMaskValues entry matches the masking value used in sideA Grid, the sideA Grid cell is masked out, vice versa for sideB. Thus by specifying different regions of a land and ocean Grids to be masked out, the two global Grids can be merged into a new global Mesh covering the entire Earth.

The following call shows how to use the `ESMF_XGridCreate()` method with the optional arguments sideA-MaskValues and sideBMaskValues.

```
xgrid = ESMF_XGridCreate(sideAGrid=sideA, sideBGrid=sideB, &
  sideAMaskValues=(/2/), sideBMaskValues=(/3,4/), rc=localrc)
```

35.3.3 Create an XGrid from user input data then use it for regridding

Alternatively, XGrid can be created from Grids on either side, area and centroid information of XGrid cells, sparse matrix matmul information. The functionalities provided by the XGrid object is constrained by the user supplied input during its creation time.

In this example, we will set up a simple XGrid from overlapping Grids on either side of the XGrid. Then we perform a flux exchange from one side to the other side of the XGrid. The Grids are laid out in the following figure:

We start by creating the Grids on both sides and associate coordinates with the Grids. For details of Grid creation and coordinate use, please refer to Grid class documentation.

```
sideA(1) = ESMF_GridCreateNoPeriDim(minIndex=(/1,1/), maxIndex=(/2,2/), &
    coordDep1=(/1/), &
    coordDep2=(/2/), &
    name='source Grid 1 on side A', rc=localrc)

sideA(2) = ESMF_GridCreateNoPeriDim(minIndex=(/1,1/), maxIndex=(/2,1/), &
    coordDep1=(/1/), &
    coordDep2=(/2/), &
    name='source Grid 2 on side A', rc=localrc)

do i = 1, 2
    call ESMF_GridAddCoord(sideA(i), staggerloc=ESMF_STAGGERLOC_CENTER, &
        rc=localrc)

enddo
```

Coordinate for the Grids on sideA, refer to the Grid layout diagram for the interpretation of the coordinate values:

```
! SideA first grid
centroidA1X=(/0.5, 1.5/)
centroidA1Y=(/0.5, 1.5/)
call ESMF_GridGetCoord(sideA(1), localDE=0, &
    staggerLoc=ESMF_STAGGERLOC_CENTER, coordDim=1, &
    farrayPtr=coordX, rc=localrc)
```

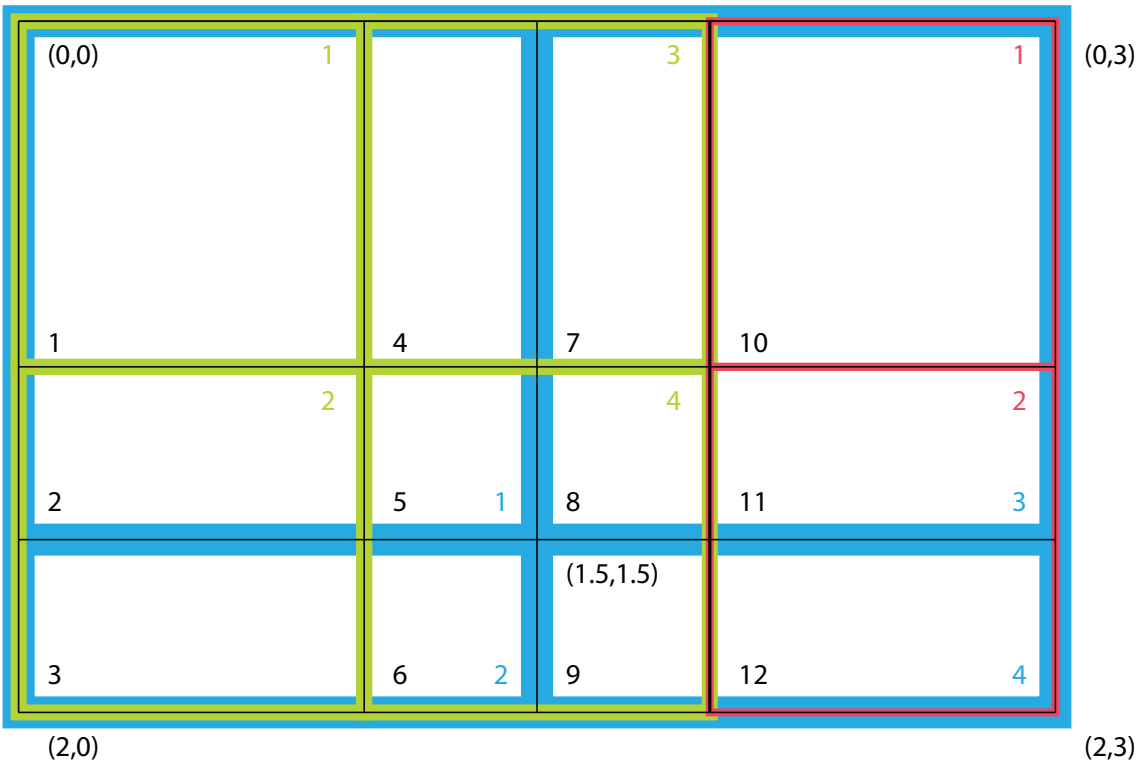

Figure 20: Grid layout for simple XGrid creation example. Overlapping of 3 Grids (Green 2x2, Red 2x1, Blue 2x2). Green and red Grids on side A, blue Grid on side B, black indicates the resulting XGrid. Color coded sequence indices are shown. Physical coordinates are the tuples in parenthesis, e.g. at the four corners of rectangular computational domain.

```
coordX = centroidA1X
call ESMF_GridGetCoord(sideA(1), localDE=0, &
    staggerLoc=ESMF_STAGGERLOC_CENTER, coordDim=2, &
    farrayPtr=coordY, rc=localrc)

coordY = centroidA1Y

! SideA second grid
centroidA2X=(/0.5, 1.5/)
centroidA2Y=(/2.5/)
call ESMF_GridGetCoord(sideA(2), localDE=0, &
    staggerLoc=ESMF_STAGGERLOC_CENTER, coordDim=1, &
    farrayPtr=coordX, rc=localrc)

coordX = centroidA2X
call ESMF_GridGetCoord(sideA(2), localDE=0, &
    staggerLoc=ESMF_STAGGERLOC_CENTER, coordDim=2, &
    farrayPtr=coordY, rc=localrc)

coordY = centroidA2Y
```

Create the destination grid on side B, only one Grid exists on side B. Also associate coordinate with the Grid:

```
sideB(1) = ESMF_GridCreateNoPeriDim(minIndex=(/1,1/), maxIndex=(/2,2/), &
    coordDep1=(/1/), coordDep2=(/2/), &
    name='destination Grid on side B', rc=localrc)

do i = 1, 1
    call ESMF_GridAddCoord(sideB(i), staggerloc=ESMF_STAGGERLOC_CENTER, &
        rc=localrc)

enddo

! SideB grid
centroidBX=(/0.75, 1.75/)
centroidBY=(/0.75, 2.25/)
call ESMF_GridGetCoord(sideB(1), localDE=0, &
    staggerLoc=ESMF_STAGGERLOC_CENTER, coordDim=1, farrayPtr=coordX, &
            rc=localrc)

coordX = centroidBX
call ESMF_GridGetCoord(sideB(1), localDE=0, &
    staggerLoc=ESMF_STAGGERLOC_CENTER, coordDim=2, farrayPtr=coordY, &
            rc=localrc)

coordY = centroidBY
```

Set up the mapping indices and weights from A side to the XGrid. For details of sequence indices, factorIndexList, and factorList, please see section 29.2.18 in the reference manual. Please refer to the figure above for interpretation of the sequence indices used here.

In order to compute the destination flux on sideB through the XGrid as an mediator, we need to set up the factorList (weights) and factorIndexList (indices) for sparse matrix multiplication in this formulation: dst_flux = W'*W*src_flux, where W' is the weight matrix from the XGrid to destination; and W is the weight matrix from source to the XGrid. The weight matrix is generated using destination area weighted algorithm. Please refer to figure 20 for details.

```
! Set up mapping from A1 -> X
sparseMatA2X(1)%factorIndexList(1,1)=1    ! src seq index (green)
sparseMatA2X(1)%factorIndexList(1,2)=2    ! src seq index (green)
sparseMatA2X(1)%factorIndexList(1,3)=2    ! src seq index (green)
sparseMatA2X(1)%factorIndexList(1,4)=3    ! src seq index (green)
sparseMatA2X(1)%factorIndexList(1,5)=4    ! src seq index (green)
sparseMatA2X(1)%factorIndexList(1,6)=4    ! src seq index (green)
sparseMatA2X(1)%factorIndexList(1,7)=3    ! src seq index (green)
sparseMatA2X(1)%factorIndexList(1,8)=4    ! src seq index (green)
sparseMatA2X(1)%factorIndexList(1,9)=4    ! src seq index (green)

sparseMatA2X(1)%factorIndexList(2,1)=1    ! dst seq index (black)
sparseMatA2X(1)%factorIndexList(2,2)=2    ! dst seq index (black)
sparseMatA2X(1)%factorIndexList(2,3)=3    ! dst seq index (black)
sparseMatA2X(1)%factorIndexList(2,4)=4    ! dst seq index (black)
sparseMatA2X(1)%factorIndexList(2,5)=5    ! dst seq index (black)
sparseMatA2X(1)%factorIndexList(2,6)=6    ! dst seq index (black)
sparseMatA2X(1)%factorIndexList(2,7)=7    ! dst seq index (black)
sparseMatA2X(1)%factorIndexList(2,8)=8    ! dst seq index (black)
sparseMatA2X(1)%factorIndexList(2,9)=9    ! dst seq index (black)

! Set up mapping from A2 -> X
sparseMatA2X(2)%factorIndexList(1,1)=1    ! src seq index (red)
sparseMatA2X(2)%factorIndexList(1,2)=2    ! src seq index (red)
sparseMatA2X(2)%factorIndexList(1,3)=2    ! src seq index (red)

sparseMatA2X(2)%factorIndexList(2,1)=10   ! dst seq index (black)
sparseMatA2X(2)%factorIndexList(2,2)=11   ! dst seq index (black)
sparseMatA2X(2)%factorIndexList(2,3)=12   ! dst seq index (black)
```

Set up the mapping weights from side A to the XGrid:

```
! Note that the weights are dest area weighted, they are ratio
! of areas with destination area as the denominator.
! Set up mapping weights from A1 -> X
sparseMatA2X(1)%factorList(:)=1.

! Set up mapping weights from A2 -> X
sparseMatA2X(2)%factorList(:)=1.
```

Set up the mapping indices and weights from the XGrid to B side:

```
! Set up mapping from X -> B
sparseMatX2B(1)%factorIndexList(1,1)=1    ! src seq index (black)
sparseMatX2B(1)%factorIndexList(1,2)=2    ! src seq index (black)
sparseMatX2B(1)%factorIndexList(1,3)=3    ! src seq index (black)
sparseMatX2B(1)%factorIndexList(1,4)=4    ! src seq index (black)
```

```
sparseMatX2B(1)%factorIndexList(1,5)=5    ! src seq index (black)
sparseMatX2B(1)%factorIndexList(1,6)=6    ! src seq index (black)
sparseMatX2B(1)%factorIndexList(1,7)=7    ! src seq index (black)
sparseMatX2B(1)%factorIndexList(1,8)=8    ! src seq index (black)
sparseMatX2B(1)%factorIndexList(1,9)=9    ! src seq index (black)
sparseMatX2B(1)%factorIndexList(1,10)=10  ! src seq index (black)
sparseMatX2B(1)%factorIndexList(1,11)=11  ! src seq index (black)
sparseMatX2B(1)%factorIndexList(1,12)=12  ! src seq index (black)

sparseMatX2B(1)%factorIndexList(2,1)=1    ! dst seq index (blue)
sparseMatX2B(1)%factorIndexList(2,2)=1    ! dst seq index (blue)
sparseMatX2B(1)%factorIndexList(2,3)=2    ! dst seq index (blue)
sparseMatX2B(1)%factorIndexList(2,4)=1    ! dst seq index (blue)
sparseMatX2B(1)%factorIndexList(2,5)=1    ! dst seq index (blue)
sparseMatX2B(1)%factorIndexList(2,6)=2    ! dst seq index (blue)
sparseMatX2B(1)%factorIndexList(2,7)=3    ! dst seq index (blue)
sparseMatX2B(1)%factorIndexList(2,8)=3    ! dst seq index (blue)
sparseMatX2B(1)%factorIndexList(2,9)=4    ! dst seq index (blue)
sparseMatX2B(1)%factorIndexList(2,10)=3   ! dst seq index (blue)
sparseMatX2B(1)%factorIndexList(2,11)=3   ! dst seq index (blue)
sparseMatX2B(1)%factorIndexList(2,12)=4   ! dst seq index (blue)

! Set up mapping weights from X -> B
sparseMatX2B(1)%factorList(1)=4./9.
sparseMatX2B(1)%factorList(2)=2./9.
sparseMatX2B(1)%factorList(3)=2./3.
sparseMatX2B(1)%factorList(4)=2./9.
sparseMatX2B(1)%factorList(5)=1./9.
sparseMatX2B(1)%factorList(6)=1./3.
sparseMatX2B(1)%factorList(7)=2./9.
sparseMatX2B(1)%factorList(8)=1./9.
sparseMatX2B(1)%factorList(9)=1./3.
sparseMatX2B(1)%factorList(10)=4./9.
sparseMatX2B(1)%factorList(11)=2./9.
sparseMatX2B(1)%factorList(12)=2./3.
```

Optionally the area can be setup to compute surface area weighted flux integrals:

```
! Set up destination areas to adjust weighted flux
xgrid_area(1) = 1.
xgrid_area(2) = 0.5
xgrid_area(3) = 0.5
xgrid_area(4) = 0.5
xgrid_area(5) = 0.25
xgrid_area(6) = 0.25
xgrid_area(7) = 0.5
xgrid_area(8) = 0.25
xgrid_area(9) = 0.25
xgrid_area(10) = 1.
xgrid_area(11) = 0.5
xgrid_area(12) = 0.5
```

Create an XGrid based on the user supplied regridding parameters:

```
xgrid = ESMF_XGridCreateFromSparseMat(sideAGrid=sideA, &
```

```
    sideBGrid=sideB, area=xgrid_area, &
    centroid=centroid, sparseMatA2X=sparseMatA2X, &
    sparseMatX2B=sparseMatX2B, rc=localrc)
```

Create an `ESMF_Field` on the XGrid:

```
field = ESMF_FieldCreate(xgrid, typekind=ESMF_TYPEKIND_R8, &
            rc=localrc)
```

Query the Field for its Fortran data pointer and its exclusive bounds:

```
call ESMF_FieldGet(field, farrayPtr=xfarrayPtr, &
    exclusiveLBound=xlb, exclusiveUBound=xub, rc=localrc)
```

Setup and initialize src and dst Fields on side A and side B Grids, source Fields have different source flux:

```
do i = 1, 2
    srcField(i) = ESMF_FieldCreate(sideA(i), &
            typekind=ESMF_TYPEKIND_R8, rc=localrc)

    call ESMF_FieldGet(srcField(i), farrayPtr=farrayPtr, rc=localrc)

    farrayPtr = i
enddo
do i = 1, 1
    dstField(i) = ESMF_FieldCreate(sideB(i), &
            typekind=ESMF_TYPEKIND_R8, rc=localrc)

    call ESMF_FieldGet(dstField(i), farrayPtr=farrayPtr, rc=localrc)

    farrayPtr = 0.0
enddo
```

The current implementation requires that Grids used to generate the XGrid must not match, i.e. they are different either topologically or geometrically or both. In this example, the first source Grid is topologically identical to the destination Grid but their geometric coordinates are different. This requirement will be relaxed in a future release.

First we compute the regrid routehandles, these routehandles can be used repeatedly afterwards. Then we initialize the values in the Fields. Finally we execute the Regrid.

```
! Compute regrid routehandles. The routehandles can be used
! repeatedly afterwards.
! From A -> X
do i = 1, 2
    call ESMF_FieldRegridStore(xgrid, srcField(i), field, &
            routehandle=rh_src2xgrid(i), rc = localrc)

enddo
! from X -> B
do i = 1, 1
    call ESMF_FieldRegridStore(xgrid, field, dstField(i), &
            routehandle=rh_xgrid2dst(i), rc = localrc)
```

```
enddo

! Initialize values in the source Fields on side A
do i = 1, 2
    call ESMF_FieldGet(srcField(i), farrayPtr=farrayPtr, rc=localrc)

    farrayPtr = i
enddo
! Initialize values in the destination Field on XGrid
xfarrayPtr = 0.0
! Initialize values in the destination Field on Side B
do i = 1, 1
    call ESMF_FieldGet(dstField(i), farrayPtr=farrayPtr, rc=localrc)

    farrayPtr = 0.0
enddo
```

First we regrid from the Fields on side A to the Field on the XGrid:

```
! Execute regrid from A -> X
do i = 1, 2
    call ESMF_FieldRegrid(srcField(i), field, &
        routehandle=rh_src2xgrid(i), &
        zeroregion=ESMF_REGION_SELECT, rc = localrc)

enddo
```

Next we regrid from the Field on XGrid to the destination Field on side B:

```
! Execute the regrid store
do i = 1, 1
    call ESMF_FieldRegrid(field, dstField(i), &
        routehandle=rh_xgrid2dst(i), rc = localrc)

enddo
```

In the above example, we first set up all the required parameters to create an XGrid from user supplied input. Then we create Fields on the XGrid and the Grids on either side. Finally we use the `ESMF_FieldRegrid()` interface to perform a flux exchange from the source side to the destination side.

35.3.4 Query the XGrid for its internal information

One can query the XGrid for its internal information:

```
call ESMF_XGridGet(xgrid, &
    sideAGridCount=ngridA, &    ! number of Grids on side A
    sideBGridCount=ngridB, &    ! number of Grids on side B
    sideAGrid=l_sideA, &    ! list of Grids on side A
    sideBGrid=l_sideB, &    ! list of Grids on side B
    area=l_area, &      ! list of area of XGrid
```

```
    centroid=l_centroid, &  ! list of centroid of XGrid
    distgridA=l_sideAdg, &  ! list of Distgrids on side A
    distgridM = distgrid, & ! balanced distgrid
    sparseMatA2X=l_sparseMatA2X, & !sparse matrix matmul parameters A to X
    sparseMatX2B=l_sparseMatX2B, & !sparse matrix matmul parameters X to B
    rc=localrc)

call ESMF_XGridGet(xgrid, localDe=0, &
    elementCount=eleCount, &    ! elementCount on the localDE
    exclusiveCount=ec, &        ! exclusive count
    exclusiveLBound=elb, &      ! exclusive lower bound
    exclusiveUBound=eub, &      ! exclusive upper bound
    rc=localrc)

call ESMF_XGridGet(xgrid, &
    xgridSide=ESMF_XGRIDSIDE_A, & ! side of the XGrid to query
    gridIndex=1, &              ! index of the distgrid
    distgrid=distgrid, &        ! the distgrid returned
    rc=localrc)
```

35.3.5 Destroying the XGrid and other resources

Clean up the resources by destroying the XGrid and other objects:

```
! After the regridding is successful.
! Clean up all the allocated resources:
call ESMF_FieldDestroy(field, rc=localrc)

call ESMF_XGridDestroy(xgrid, rc=localrc)

do i = 1, 2
    call ESMF_FieldDestroy(srcField(i), rc = localrc)

    call ESMF_GridDestroy(sideA(i), rc = localrc)

enddo

do i = 1, 1
    call ESMF_FieldDestroy(dstField(i), rc = localrc)

    call ESMF_GridDestroy(sideB(i), rc = localrc)

enddo

deallocate(sparseMatA2X(1)%factorIndexList, sparseMatA2X(1)%factorList)
deallocate(sparseMatA2X(2)%factorIndexList, sparseMatA2X(2)%factorList)
deallocate(sparseMatX2B(1)%factorIndexList, sparseMatX2B(1)%factorList)
```

35.4 Restrictions and Future Work

35.4.1 Restrictions and Future Work

1. **CAUTION:** Any Grid or Mesh pair picked from the A side and B side of the XGrid cannot point to the same Grid or Mesh in memory on a local PET. This prevents Regrid from selecting the right source and destination grid automatically to calculate the regridding routehandle. It's okay for the Grid and Mesh to have identical topological and geographical properties as long as they are stored in different memory.

35.5 Design and Implementation Notes

1. The XGrid class is implemented in Fortran, and as such is defined inside the framework by a XGrid derived type and a set of subprograms (functions and subroutines) which operate on that derived type. The XGrid class contains information needed to create Grid, Field, and communication routehandle.
2. XGrid follows the framework-wide convention of the *unison* creation and operation rule: All PETs which are part of the currently executing VM must create the same XGrids at the same point in their execution. In addition to the unison rule, XGrid creation also performs inter-PET communication within the current executing VM.

35.6 Class API

35.6.1 ESMF_XGridAssignment(=) - XGrid assignment

INTERFACE:

```
interface assignment(=)
xgrid1 = xgrid2
```

ARGUMENTS:

```
type(ESMF_XGrid) :: xgrid1
type(ESMF_XGrid) :: xgrid2
```

DESCRIPTION:

Assign xgrid1 as an alias to the same ESMF XGrid object in memory as xgrid2. If xgrid2 is invalid, then xgrid1 will be equally invalid after the assignment.

The arguments are:

xgrid1 The `ESMF_XGrid` object on the left hand side of the assignment.

xgrid2 The `ESMF_XGrid` object on the right hand side of the assignment.

35.6.2 ESMF_XGridOperator(==) - XGrid equality operator

INTERFACE:

```
interface operator(==)
if (xgrid1 == xgrid2) then ... endif
          OR
result = (xgrid1 == xgrid2)
```

RETURN VALUE:

```
logical :: result
```

ARGUMENTS:

```
type(ESMF_XGrid), intent(in) :: xgrid1
type(ESMF_XGrid), intent(in) :: xgrid2
```

DESCRIPTION:

Test whether xgrid1 and xgrid2 are valid aliases to the same ESMF XGrid object in memory. For a more general comparison of two ESMF XGrids, going beyond the simple alias test, the ESMF_XGridMatch() function (not yet implemented) must be used.

The arguments are:

xgrid1 The `ESMF_XGrid` object on the left hand side of the equality operation.

xgrid2 The `ESMF_XGrid` object on the right hand side of the equality operation.

35.6.3 ESMF_XGridOperator(/=) - XGrid not equal operator

INTERFACE:

```
interface operator(/=)
if (xgrid1 /= xgrid2) then ... endif
          OR
result = (xgrid1 /= xgrid2)
```

RETURN VALUE:

```
logical :: result
```

ARGUMENTS:

```
type(ESMF_XGrid), intent(in) :: xgrid1
type(ESMF_XGrid), intent(in) :: xgrid2
```

DESCRIPTION:

Test whether xgrid1 and xgrid2 are *not* valid aliases to the same ESMF XGrid object in memory. For a more general comparison of two ESMF XGrids, going beyond the simple alias test, the ESMF_XGridMatch() function (not yet implemented) must be used.

The arguments are:

xgrid1 The `ESMF_XGrid` object on the left hand side of the non-equality operation.

xgrid2 The `ESMF_XGrid` object on the right hand side of the non-equality operation.

35.6.4 ESMF_XGridCreate - Create an XGrid from lists of Grids and Meshes

INTERFACE:

```
function ESMF_XGridCreate(&
    sideAGrid,              sideAMesh, &
    sideBGrid,              sideBMesh, &
    sideAGridPriority,      sideAMeshPriority, &
    sideBGridPriority,      sideBMeshPriority, &
    sideAMaskValues,        sideBMaskValues, &
    storeOverlay, &
    name, rc)
```

RETURN VALUE:

```
  type(ESMF_XGrid)                          :: ESMF_XGridCreate
```

ARGUMENTS:

```
-- The following arguments require argument keyword syntax (e.g. rc=rc). --
  type(ESMF_Grid),      intent(in), optional :: sideAGrid(:)
  type(ESMF_Mesh),      intent(in), optional :: sideAMesh(:)
  type(ESMF_Grid),      intent(in), optional :: sideBGrid(:)
  type(ESMF_Mesh),      intent(in), optional :: sideBMesh(:)
  integer,              intent(in), optional :: sideAGridPriority(:)
  integer,              intent(in), optional :: sideAMeshPriority(:)
  integer,              intent(in), optional :: sideBGridPriority(:)
  integer,              intent(in), optional :: sideBMeshPriority(:)
  integer(ESMF_KIND_I4),intent(in), optional :: sideAMaskValues(:)
  integer(ESMF_KIND_I4),intent(in), optional :: sideBMaskValues(:)
  logical,              intent(in), optional :: storeOverlay
  character(len=*),     intent(in), optional :: name
  integer,              intent(out),optional :: rc
```

DESCRIPTION:

Create an XGrid from user supplied input: the list of Grids or Meshes on side A and side B, and other optional arguments. A user can supply both Grids and Meshes on one side to create the XGrid. By default, the Grids have a higher priority over Meshes but the order of priority can be adjusted by the optional GridPriority and MeshPriority arguments. The priority order of Grids and Meshes can also be interleaved by rearranging the optional GridPriority and MeshPriority arguments accordingly.

Sparse matrix multiplication coefficients are internally computed and uniquely determined by the Grids or Meshes provided in `sideA` and `sideB`. User can supply a single `ESMF_Grid` or an array of `ESMF_Grid` on either side of the `ESMF_XGrid`. For an array of `ESMF_Grid` or `ESMF_Mesh` in `sideA` or `sideB`, a merging process concatenates all the `ESMF_Grid`s and `ESMF_Mesh`es into a super mesh represented by `ESMF_Mesh`. The super mesh is then used to compute the XGrid. Grid or Mesh objects in `sideA` and `sideB` arguments must have coordinates defined for the corners of a Grid or Mesh cell. XGrid creation can be potentially memory expensive given the size of the input Grid and Mesh objects. By default, the super mesh is not stored to reduce memory usage. Once communication routehandles are computed using `ESMF_FieldRegridStore()` method through XGrid, all memory can be released by destroying the XGrid.

If `sideA` and `sideB` have a single Grid or Mesh object, it's erroneous if the two Grids or Meshes are spatially disjoint. It is also erroneous to specify a Grid or Mesh object in `sideA` or `sideB` that is spatially disjoint from the `ESMF_XGrid`.

This call is *collective* across the current VM. For more details please refer to the description 35.1 of the XGrid class. For an example and associated documentation using this method see section 35.3.1

The arguments are:

[sideAGrid] Parametric 2D Grids on side A, for example, these Grids can be either Cartesian 2D or Spherical.

[sideAMesh] Parametric 2D Meshes on side A, for example, these Meshes can be either Cartesian 2D or Spherical.

[sideBGrid] Parametric 2D Grids on side B, for example, these Grids can be either Cartesian 2D or Spherical.

[sideBMesh] Parametric 2D Meshes on side B, for example, these Meshes can be either Cartesian 2D or Spherical.

[sideAGridPriority] Priority array of Grids on sideA during overlay generation. The `sideAGridPriority` array should be the same size as the `sideAGrid` array. The values in the array should range from 1 to size(sideAGrid)+size(sideAMesh). A Grid whose corresponding value in this array is lower than another side A Grid or Mesh, will take precedence over that Grid or Mesh during side A merging. In other words, if both have parts in the same region, then the object with the lower value will win, and the other Grid or Mesh part will be clipped away.

[sideAMeshPriority] Priority array of Meshes on sideA during overlay generation. The `sideAMeshPriority` array should be the same size as the `sideAMesh` array. The values in the array should range from 1 to size(sideAGrid)+size(sideAMesh). A Mesh whose corresponding value in this array is lower than another side A Grid or Mesh, will take precedence over that Grid or Mesh during side A merging. In other words, if both have parts in the same region, then the object with the lower value will win, and the other Grid or Mesh part will be clipped away.

[sideBGridPriority] Priority array of Grids on sideB during overlay generation. The `sideBGridPriority` array should be the same size as the `sideBGrid` array. The values in the array should range from 1 to size(sideBGrid)+size(sideBMesh). A Grid whose corresponding value in this array is lower than another side B Grid or Mesh, will take precedence over that Grid or Mesh during side B merging. In other words, if both have parts in the same region, then the object with the lower value will win, and the other Grid or Mesh part will be clipped away.

[sideBMeshPriority] Priority array of Meshes on sideB during overlay generation. The `sideBMeshPriority` array should be the same size as the `sideBMesh` array. The values in the array should range from 1 to size(sideBGrid)+size(sideBMesh). A Mesh whose corresponding value in this array is lower than another side B Grid or Mesh, will take precedence over that Grid or Mesh during side B merging. In other words, if both have parts in the same region, then the object with the lower value will win, and the other Grid or Mesh part will be clipped away.

[sideAMaskValues] Mask information can be set in the Grid (see 32.3.17) or Mesh (see 34.3.11) upon which the `Field` is built. The `sideAMaskValues` argument specifies the values in that mask information which indicate a point should be masked out. In other words, a location is masked if and only if the value for that location in the mask information matches one of the values listed in `sideAMaskValues`. If `sideAMaskValues` is not specified, no masking on side A will occur.

[sideBMaskValues] Mask information can be set in the Grid (see 32.3.17) or Mesh (see 34.3.11) upon which the `Field` is built. The `sideBMaskValues` argument specifies the values in that mask information which indicate a point should be masked out. In other words, a location is masked if and only if the value for that location in the mask information matches one of the values listed in `sideBMaskValues`. If `sideBMaskValues` is not specified, no masking on side B will occur.

[storeOverlay] Setting the `storeOverlay` optional argument to .false. (default) allows a user to bypass storage of the `ESMF_Mesh` used to represent the XGrid. Only a `ESMF_DistGrid` is stored to allow Field to be built on the XGrid. If the temporary mesh object is of interest, `storeOverlay` can be set to .true. so a user can retrieve it for future use.

[name] name of the xgrid object.

[rc] Return code; equals `ESMF_SUCCESS` only if the `ESMF_XGrid` is created.

35.6.5 ESMF_XGridCreateFromSparseMat an XGrid from raw input parameters

INTERFACE:

```
function ESMF_XGridCreateFromSparseMat(&
    sideAGrid,              sideAMesh, &
    sideBGrid,              sideBMesh, &
    sideAGridPriority,      sideAMeshPriority, &
    sideBGridPriority,      sideBMeshPriority, &
    sparseMatA2X, sparseMatX2A, sparseMatB2X, sparseMatX2B, &
    area, centroid, &
    name, &
    rc)
```

RETURN VALUE:

```
    type(ESMF_XGrid) :: ESMF_XGridCreateFromSparseMat
```

ARGUMENTS:

```
-- The following arguments require argument keyword syntax (e.g. rc=rc). --
type(ESMF_Grid),      intent(in), optional :: sideAGrid(:)
type(ESMF_Mesh),      intent(in), optional :: sideAMesh(:)
type(ESMF_Grid),      intent(in), optional :: sideBGrid(:)
type(ESMF_Mesh),      intent(in), optional :: sideBMesh(:)
integer,              intent(in), optional :: sideAGridPriority(:)
integer,              intent(in), optional :: sideAMeshPriority(:)
integer,              intent(in), optional :: sideBGridPriority(:)
integer,              intent(in), optional :: sideBMeshPriority(:)
```

```
type(ESMF_XGridSpec), intent(in), optional :: sparseMatA2X(:)
type(ESMF_XGridSpec), intent(in), optional :: sparseMatX2A(:)
type(ESMF_XGridSpec), intent(in), optional :: sparseMatB2X(:)
type(ESMF_XGridSpec), intent(in), optional :: sparseMatX2B(:)
real(ESMF_KIND_R8),   intent(in), optional :: area(:)
real(ESMF_KIND_R8),   intent(in), optional :: centroid(:,:)
character (len=*),    intent(in), optional :: name
integer,              intent(out),optional :: rc
```

DESCRIPTION:

Create an XGrid directly from user supplied sparse matrix parameters. User is responsible to supply all information necessary for communication calculation. For an example and associated documentation using this method see section 35.3.3

The arguments are:

[sideAGrid] Parametric 2D Grids on side A, for example, these Grids can be either Cartesian 2D or Spherical.

[sideAMesh] Parametric 2D Meshes on side A, for example, these Meshes can be either Cartesian 2D or Spherical.

[sideBGrid] Parametric 2D Grids on side B, for example, these Grids can be either Cartesian 2D or Spherical.

[sideBMesh] Parametric 2D Meshes on side B, for example, these Meshes can be either Cartesian 2D or Spherical.

[sideAGridPriority] Priority array of Grids on sideA during overlay generation. The `sideAGridPriority` array should be the same size as the `sideAGrid` array. The values in the array should range from 1 to size(sideAGrid)+size(sideAMesh). A Grid whose corresponding value in this array is lower than another side A Grid or Mesh, will take precedence over that Grid or Mesh during side A merging. In other words, if both have parts in the same region, then the object with the lower value will win, and the other Grid or Mesh part will be clipped away.

[sideAMeshPriority] Priority array of Meshes on sideA during overlay generation. The `sideAMeshPriority` array should be the same size as the `sideAMesh` array. The values in the array should range from 1 to size(sideAGrid)+size(sideAMesh). A Mesh whose corresponding value in this array is lower than another side A Grid or Mesh, will take precedence over that Grid or Mesh during side A merging. In other words, if both have parts in the same region, then the object with the lower value will win, and the other Grid or Mesh part will be clipped away.

[sideBGridPriority] Priority array of Grids on sideB during overlay generation. The `sideBGridPriority` array should be the same size as the `sideBGrid` array. The values in the array should range from 1 to size(sideBGrid)+size(sideBMesh). A Grid whose corresponding value in this array is lower than another side B Grid or Mesh, will take precedence over that Grid or Mesh during side B merging. In other words, if both have parts in the same region, then the object with the lower value will win, and the other Grid or Mesh part will be clipped away.

[sideBMeshPriority] Priority array of Meshes on sideB during overlay generation. The `sideBMeshPriority` array should be the same size as the `sideBMesh` array. The values in the array should range from 1 to size(sideBGrid)+size(sideBMesh). A Mesh whose corresponding value in this array is lower than another side B Grid or Mesh, will take precedence over that Grid or Mesh during side B merging. In other words, if both have parts in the same region, then the object with the lower value will win, and the other Grid or Mesh part will be clipped away.

[sparseMatA2X] indexlist from a Grid index space on side A to xgrid index space; indexFactorlist from a Grid index space on side A to xgrid index space.

[sparseMatX2A] indexlist from xgrid index space to a Grid index space on side A; indexFactorlist from xgrid index space to a Grid index space on side A.

[sparseMatB2X] indexlist from a Grid index space on side B to xgrid index space; indexFactorlist from a Grid index space on side B to xgrid index space.

[sparseMatX2B] indexlist from xgrid index space to a Grid index space on side B; indexFactorlist from xgrid index space to a Grid index space on side B.

[area] area of the xgrid cells.

[centroid] coordinates at the area weighted center of the xgrid cells.

[name] name of the xgrid object.

[rc] Return code; equals `ESMF_SUCCESS` only if the `ESMF_XGrid` is created.

35.6.6 ESMF_XGridIsCreated - Check whether a XGrid object has been created

INTERFACE:

```
function ESMF_XGridIsCreated(xgrid, rc)
```

RETURN VALUE:

```
logical :: ESMF_XGridIsCreated
```

ARGUMENTS:

```
     type(ESMF_XGrid), intent(in)            :: xgrid
 -- The following arguments require argument keyword syntax (e.g. rc=rc). --
     integer,             intent(out), optional :: rc
```

DESCRIPTION:

Return `.true.` if the `xgrid` has been created. Otherwise return `.false.`. If an error occurs, i.e. `rc /= ESMF_SUCCESS` is returned, the return value of the function will also be `.false.`.

The arguments are:

xgrid `ESMF_XGrid` queried.

[rc] Return code; equals `ESMF_SUCCESS` if there are no errors.

35.6.7 ESMF_XGridDestroy - Release resources associated with an XGrid

INTERFACE:

```
subroutine ESMF_XGridDestroy(xgrid, noGarbage, rc)
```

ARGUMENTS:

```
     type(ESMF_XGrid), intent(inout)          :: xgrid
 -- The following arguments require argument keyword syntax (e.g. rc=rc). --
     logical,          intent(in),   optional :: noGarbage
     integer,          intent(out),  optional :: rc
```

STATUS:

- This interface is backward compatible with ESMF versions starting at 5.2.0r. If code using this interface compiles with any version of ESMF starting with 5.2.0r, then it will compile with the current version.
- This interface was modified since ESMF version 5.2.0r. The fact that code using this interface compiles with the current ESMF version does not guarantee that it compiles with previous versions of this interface. If user code compatibility with version 5.2.0r is desired then care must be taken to limit the use of this interface to features that were available in the 5.2.0r release.
  Changes made after the 5.2.0r release:

  8.1.0 Added argument `noGarbage`. The argument provides a mechanism to override the default garbage collection mechanism when destroying an ESMF object.

DESCRIPTION:

Destroys an `ESMF_XGrid`, releasing the resources associated with the object.

The arguments are:

xgrid `ESMF_XGrid` object.

[noGarbage] If set to `.TRUE.` the object will be fully destroyed and removed from the ESMF garbage collection system. Note however that under this condition ESMF cannot protect against accessing the destroyed object through dangling aliases – a situation which may lead to hard to debug application crashes.

It is generally recommended to leave the `noGarbage` argument set to `.FALSE.` (the default), and to take advantage of the ESMF garbage collection system which will prevent problems with dangling aliases or incorrect sequences of destroy calls. However this level of support requires that a small remnant of the object is kept in memory past the destroy call. This can lead to an unexpected increase in memory consumption over the course of execution in applications that use temporary ESMF objects. For situations where the repeated creation and destruction of temporary objects leads to memory issues, it is recommended to call with `noGarbage` set to `.TRUE.`, fully removing the entire temporary object from memory.

[rc] Return code; equals `ESMF_SUCCESS` if there are no errors.

35.6.8 ESMF_XGridGet - Get object-wide information from an XGrid

INTERFACE:

```
   ! Private name; call using ESMF_XGridGet()

 subroutine ESMF_XGridGetDefault(xgrid, &
     sideAGridCount, sideBGridCount, sideAMeshCount, sideBMeshCount, &
     coordSys, &
     dimCount, elementCount, &
     sideAGrid, sideBGrid, sideAMesh, sideBMesh, &
     mesh, &
     area, centroid, &
     distgridA, distgridB, distgridM, &
     sparseMatA2X, sparseMatX2A, sparseMatB2X, sparseMatX2B, &
     name, &
     rc)
```

ARGUMENTS:

```
 type(ESMF_XGrid),     intent(in)            :: xgrid
 -- The following arguments require argument keyword syntax (e.g. rc=rc). --
 integer,              intent(out), optional :: sideAGridCount, sideBGridCount
 integer,              intent(out), optional :: sideAMeshCount, sideBMeshCount
 type(ESMF_CoordSys_Flag), intent(out), optional :: coordSys
 integer,              intent(out), optional :: dimCount
 integer,              intent(out), optional :: elementCount
 type(ESMF_Grid),      intent(out), optional :: sideAGrid(:), sideBGrid(:)
 type(ESMF_Mesh),      intent(out), optional :: sideAMesh(:), sideBMesh(:)
 type(ESMF_Mesh),      intent(out), optional :: mesh
 real(ESMF_KIND_R8),   intent(out), optional :: area(:)
 real(ESMF_KIND_R8),   intent(out), optional :: centroid(:,:)
 type(ESMF_DistGrid),  intent(out), optional :: distgridA(:)
 type(ESMF_DistGrid),  intent(out), optional :: distgridB(:)
 type(ESMF_DistGrid),  intent(out), optional :: distgridM
 type(ESMF_XGridSpec), intent(out), optional :: sparseMatA2X(:)
 type(ESMF_XGridSpec), intent(out), optional :: sparseMatX2A(:)
 type(ESMF_XGridSpec), intent(out), optional :: sparseMatB2X(:)
 type(ESMF_XGridSpec), intent(out), optional :: sparseMatX2B(:)
 character (len=*),    intent(out), optional :: name
 integer,              intent(out), optional :: rc
```

DESCRIPTION:

Get information about XGrid

The arguments are:

xgrid The `ESMF_XGrid` object used to retrieve information from.

[sideAGridCount] Total Number of Grids on the A side.

[sideBGridCount] Total Number of Grids on the B side.

[sideAMeshCount] Total Number of Meshes on the A side.

[sideBMeshCount] Total Number of Meshes on the B side.

[coordSys] The coordinate system of the XGrid's coordinate data.

[dimCount] Number of dimension of the xgrid.

[elementCount] Number of elements in exclusive region of the xgrid on this PET.

[sideAGrid] List of 2D Grids on side A. Must enter with shape(sideAGrid)=(/sideAGridCount/).

[sideBGrid] List of 2D Grids on side B. Must enter with shape(sideBGrid)=(/sideBGridCount/).

[sideAMesh] List of 2D Meshes on side A. Must enter with shape(sideAMesh)=(/sideAMeshCount/).

[sideBMesh] List of 2D Meshes on side B. Must enter with shape(sideBMesh)=(/sideBMeshCount/).

[mesh] Super mesh stored in XGrid when storeOverlay is set true during XGrid creation.

[area] Area of the xgrid cells on this PET. Must enter with shape(area)=(/elementCount/).

[centroid] Coordinates at the area weighted center of the xgrid cells on this PET. Must enter with shape(centroid)=(/elementCount, dimCount/).

[distgridA] List of distgrids whose sequence index list is an overlap between a Grid on sideA and the xgrid object. Must enter with shape(distgridA)=(/sideAGridCount+sideAMeshCount/).

[distgridB] List of distgrids whose sequence index list is an overlap between a Grid on sideB and the xgrid object. Must enter with shape(distgridB)=(/sideBGridCount+sideBMeshCount/).

[distgridM] The distgrid whose sequence index list fully describes the xgrid object.

[sparseMatA2X] Indexlist from a Grid index space on side A to xgrid index space; index-Factorlist from a Grid index space on side A to xgrid index space. Must enter with shape(sparsematA2X)=(/sideAGridCount+sideAMeshCount/).

[sparseMatX2A] Indexlist from xgrid index space to a Grid index space on side A; index-Factorlist from xgrid index space to a Grid index space on side A. Must enter with shape(sparsematX2A)=(/sideAGridCount+sideAMeshCount/).

[sparseMatB2X] Indexlist from a Grid index space on side B to xgrid index space; index-Factorlist from a Grid index space on side B to xgrid index space. Must enter with shape(sparsematB2X)=(/sideBGridCount+sideBMeshCount/).

[sparseMatX2B] Indexlist from xgrid index space to a Grid index space on side B; index-Factorlist from xgrid index space to a Grid index space on side B. Must enter with shape(sparsematX2B)=(/sideBGridCount+sideBMeshCount/).

[name] Name of the xgrid object.

[rc] Return code; equals `ESMF_SUCCESS` only if the `ESMF_XGrid` is created.

36 Geom Class

36.1 Description

The ESMF Geom class is used as a container for other ESMF geometry objects (e.g. an ESMF Grid). This allows a generic representation of a geometry to be passed around (e.g. through a coupled system) without it's specific type being known. Some operations are supported on a Geom object and more will be added over time as needed. However, if an unsupported operation is needed, then the specific geometry object can always be pulled out and operated on that way.

In addition to the geometry object, a Geom can also contain information describing a location on a geometry. For example, in the case of a Grid, a geometry object will also contain a stagger location. Having this location information allows the creation of Fields and other capabilities to be performed in the most generic way on a Geom object. For geometries where it is appropriate, the user can optionally specify this location information during the creation of a Geom object. However, if no location is specified, then default values for this information are provided which match those which would be used when creating a Field with the specific geometry (e.g. stagger location ESMF_STAGGERLOC_CENTER for a Grid).

36.2 Class API: Geom Methods

36.2.1 ESMF_GeomAssignment(=) - Geom assignment

INTERFACE:

```
interface assignment(=)
geom1 = geom2
```

ARGUMENTS:

```
type(ESMF_Geom) :: geom1
type(ESMF_Geom) :: geom2
```

DESCRIPTION:

Assign geom1 as an alias to the same ESMF Geom object in memory as geom2. If geom2 is invalid, then geom1 will be equally invalid after the assignment.

The arguments are:

geom1 The `ESMF_Geom` object on the left hand side of the assignment.

geom2 The `ESMF_Geom` object on the right hand side of the assignment.

36.2.2 ESMF_GeomOperator(==) - Geom equality operator

INTERFACE:

```
interface operator(==)
  if (geom1 == geom2) then ... endif
            OR
  result = (geom1 == geom2)
```

RETURN VALUE:

```
logical :: result
```

ARGUMENTS:

```
type(ESMF_Geom), intent(in) :: geom1
type(ESMF_Geom), intent(in) :: geom2
!
```

DESCRIPTION:

Test whether geom1 and geom2 are valid aliases to the same ESMF Geom object in memory. For a more general comparison of two ESMF Geoms, going beyond the simple alias test, the ESMF_GeomMatch() function must be used.

The arguments are:

geom1 The `ESMF_Geom` object on the left hand side of the equality operation.

geom2 The `ESMF_Geom` object on the right hand side of the equality operation.

36.2.3 ESMF_GeomOperator(/=) - Geom not equal operator

INTERFACE:

```
interface operator(/=)
  if (geom1 /= geom2) then ... endif
            OR
  result = (geom1 /= geom2)
```

RETURN VALUE:

```
logical :: result
```

ARGUMENTS:

```
type(ESMF_Geom), intent(in) :: geom1
type(ESMF_Geom), intent(in) :: geom2
```

DESCRIPTION:

Test whether geom1 and geom2 are *not* valid aliases to the same ESMF Geom object in memory. For a more general comparison of two ESMF Geoms, going beyond the simple alias test, the ESMF_GeomMatch() function (not yet fully implemented) must be used.

The arguments are:

geom1 The `ESMF_Geom` object on the left hand side of the non-equality operation.

geom2 The `ESMF_Geom` object on the right hand side of the non-equality operation.

36.2.4 ESMF_GeomCreate - Create a Geom from a Grid

INTERFACE:

```
! Private name; call using ESMF_GeomCreate()
    function ESMF_GeomCreateGrid(grid,staggerloc, rc)
```

RETURN VALUE:

```
type(ESMF_Geom) :: ESMF_GeomCreateGrid
```

ARGUMENTS:

```
type(ESMF_Grid),       intent(in)              :: grid
type(ESMF_StaggerLoc), intent(in), optional    :: staggerloc
integer,               intent(out), optional   :: rc
```

DESCRIPTION:

Create an `ESMF_Geom` object from an `ESMF_Grid` object.

The arguments are:

grid `ESMF_Grid` object from which to create the Geom.

[staggerloc] Stagger location of data in grid cells. For valid predefined values see section 32.2.6. If not specified, defaults to `ESMF_STAGGERLOC_CENTER`.

[rc] Return code; equals `ESMF_SUCCESS` if there are no errors.

36.2.5 ESMF_GeomCreate - Create a Geom from a Mesh

INTERFACE:

```
! Private name; call using ESMF_GeomCreate()
    function ESMF_GeomCreateMesh(mesh, meshLoc, rc)
```

RETURN VALUE:

```
type(ESMF_Geom) :: ESMF_GeomCreateMesh
```

ARGUMENTS:

```
type(ESMF_Mesh),       intent(in)              :: mesh
type(ESMF_MeshLoc),    intent(in),  optional   :: meshLoc
integer,               intent(out), optional   :: rc
```

DESCRIPTION:

Create an `ESMF_Geom` object from an `ESMF_Mesh` object.

The arguments are:

mesh `ESMF_Mesh` object from which to create the Geom.

[meshloc] The part of the Mesh on which to build the Field. For valid predefined values see Section 55.41. If not set, defaults to `ESMF_MESHLOC_NODE`.

[rc] Return code; equals `ESMF_SUCCESS` if there are no errors.

36.2.6 ESMF_GeomCreate - Create a Geom from a LocStream

INTERFACE:

```
! Private name; call using ESMF_GeomCreate()
    function ESMF_GeomCreateLocStream(locstream, rc)
```

RETURN VALUE:

```
type(ESMF_Geom) :: ESMF_GeomCreateLocStream
```

ARGUMENTS:

```
type(ESMF_LocStream),  intent(in)              :: locstream
integer,               intent(out),  optional  :: rc
```

DESCRIPTION:

Create an `ESMF_Geom` object from an `ESMF_LocStream` object.

The arguments are:

locstream `ESMF_LocStream` object from which to create the Geom.

[rc] Return code; equals `ESMF_SUCCESS` if there are no errors.

36.2.7 ESMF_GeomCreate - Create a Geom from an XGrid

INTERFACE:

```
! Private name; call using ESMF_GeomCreate()
    function ESMF_GeomCreateXGrid(xgrid, xgridside, gridIndex, rc)
```

RETURN VALUE:

```
type(ESMF_Geom) :: ESMF_GeomCreateXGrid
```

ARGUMENTS:

```
type(ESMF_XGrid),     intent(in)                 :: xgrid
type(ESMF_XGridSide_Flag), intent(in), optional :: xgridSide
integer,              intent(in), optional      :: gridIndex
integer,              intent(out),optional      :: rc
```

DESCRIPTION:

Create an `ESMF_Geom` object from an `ESMF_XGrid` object.

The arguments are:

xgrid `ESMF_XGrid` object from which to create the Geom.

[xgridSide] Which side of the XGrid to create the Field on (either ESMF_XGRIDSIDE_A, ESMF_XGRIDSIDE_B, or ESMF_XGRIDSIDE_BALANCED). If not specified, then defaults to ESMF_XGRIDSIDE_BALANCED.

[gridindex] If xgridSide is ESMF_XGRIDSIDE_A or ESMF_XGRIDSIDE_B then this index tells which Grid or Mesh on that side is being referred to. If not provided, defaults to 1.

[rc] Return code; equals `ESMF_SUCCESS` if there are no errors.

36.2.8 ESMF_GeomDestroy - Release resources associated with a Geom

INTERFACE:

```
subroutine ESMF_GeomDestroy(geom, rc)
```

ARGUMENTS:

```
type(ESMF_Geom)            :: geom
integer, intent(out), optional :: rc
```

DESCRIPTION:

Destroys an `ESMF_Geom` object. This call does not destroy wrapped Grid, LocStream, or other objects.

The arguments are:

geom `ESMF_Geom` to be destroyed.

[rc] Return code; equals `ESMF_SUCCESS` if there are no errors.

36.2.9 ESMF_GeomGet - Get information about a Geom

INTERFACE:

```
subroutine ESMF_GeomGet(geom, &
    dimCount, rank, localDECount, distgrid, &
    distgridToGridMap, indexFlag, geomtype, &
    grid, staggerloc, mesh, meshloc, locstream, &
    xgrid, xgridside, gridIndex,rc)
```

ARGUMENTS:

```
type(ESMF_Geom),   intent(in)            :: geom
integer,               intent(out), optional :: dimCount
integer,               intent(out), optional :: rank
integer,               intent(out), optional :: localDECount
type(ESMF_DistGrid),   intent(out), optional :: distgrid
integer,               intent(out), optional :: distgridToGridMap(:)
type(ESMF_Index_Flag),  intent(out), optional :: indexflag
type(ESMF_GeomType_Flag),   intent(out), optional :: geomtype
type(ESMF_Grid),       intent(out), optional :: grid
type(ESMF_StaggerLoc), intent(out), optional :: staggerloc
type(ESMF_Mesh),       intent(out), optional :: mesh
type(ESMF_MeshLoc),    intent(out), optional :: meshloc
type(ESMF_LocStream),  intent(out), optional :: locstream
type(ESMF_XGrid),      intent(out), optional :: xgrid
type(ESMF_XGridSide_Flag),  intent(out), optional :: xgridside
integer,               intent(out), optional :: gridIndex
integer,               intent(out), optional :: rc
```

DESCRIPTION:

Get various types of information about a Geom.

The arguments are:

geom Geom to get the information from.

[dimCount] The full number of dimensions of the Distgrid object underneath the Geom object.

[rank] The count of the memory dimensions in this Geom object. Typically it's the same as dimCount. However, in some cases (e.g. arbitrarily distributed grids) it can be different.

[localDECount] The number of DEs in this Geom object on this PET.

[distgrid] The structure describing the distribution of the Geom object.

[distgridToGridMap] List that has as many elements as the distgrid dimCount. This array describes mapping between the Geom object's dimensions and its Distgrid.

[indexflag] Flag that indicates how the DE-local indices are to be defined.

[geomtype] The type of geometry on which the Field is built. See section 55.23 for the range of values.

[grid] If the Geom object holds a Grid, then this will pass out that Grid object.

[staggerloc] If the Geom object holds a Grid, then this will pass out the staggerloc.

[mesh] If the Geom object holds a Mesh, then this will pass out that Mesh object.

[meshloc] If the Geom object holds a Mesh, then this will pass out the meshloc.

[locstream] If the Geom object holds a LocStream, then this will pass out that LocStream object.

[xgrid] If the Geom object holds an XGrid, then this will pass out that XGrid object.

[xgridSide] If the Geom object holds an XGrid, then this will pass out the XGrid side.

[gridIndex] If the Geom object holds an XGrid, then this will pass out the gridIndex.

[rc] Return code; equals `ESMF_SUCCESS` if there are no errors.

36.2.10 ESMF_GeomMatch - Check if two Geom objects match

INTERFACE:

```
function ESMF_GeomMatch(geom1, geom2, rc)
```

RETURN VALUE:

```
type(ESMF_GeomMatch_Flag) :: ESMF_GeomMatch
```

ARGUMENTS:

```
     type(ESMF_Geom),  intent(in)              :: geom1
     type(ESMF_Geom),  intent(in)              :: geom2
 -- The following arguments require argument keyword syntax (e.g. rc=rc). --
     integer,          intent(out),  optional  :: rc
```

DESCRIPTION:

Check if `geom1` and `geom2` match. Returns a range of values of type ESMF_GeomMatch indicating how closely the Geoms match. For a description of the possible return values, please see **??**. Please also note that by default this call is not collective and only returns the match for the piece of the Geoms on the local PET. In this case, it is possible for this call to return a different match on different PETs for the same Geoms.

The arguments are:

geom1 `ESMF_Geom` object.

geom2 `ESMF_Geom` object.

[rc] Return code; equals `ESMF_SUCCESS` if there are no errors.

37 DistGrid Class

37.1 Description

The ESMF DistGrid class sits on top of the DELayout class and holds domain information in index space. A DistGrid object captures the index space topology and describes its decomposition in terms of DEs. Combined with DELayout and VM the DistGrid defines the data distribution of a domain decomposition across the computational resources of an ESMF Component.

The global domain is defined as the union of logically rectangular (LR) sub-domains or *tiles*. The DistGrid create methods allow the specification of such a multi-tile global domain and its decomposition into exclusive, DE-local LR regions according to various degrees of user specified constraints. Complex index space topologies can be constructed by specifying connection relationships between tiles during creation.

The DistGrid class holds domain information for all DEs. Each DE is associated with a local LR region. No overlap of the regions is allowed. The DistGrid offers query methods that allow DE-local topology information to be extracted, e.g. for the construction of halos by higher classes.

A DistGrid object only contains decomposable dimensions. The minimum rank for a DistGrid object is 1. A maximum rank does not exist for DistGrid objects, however, ranks greater than 7 may lead to difficulties with respect to the Fortran API of higher classes based on DistGrid. The rank of a DELayout object contained within a DistGrid object must be equal to the DistGrid rank. Higher class objects that use the DistGrid, such as an Array object, may be of different rank than the associated DistGrid object. The higher class object will hold the mapping information between its dimensions and the DistGrid dimensions.

37.2 Constants

37.2.1 ESMF_DISTGRIDMATCH

DESCRIPTION:
Indicates the level to which two DistGrid variables match.

The type of this flag is:

`type(ESMF_DistGridMatch_Flag)`

The valid values are:

ESMF_DISTGRIDMATCH_INVALID: Indicates a non-valid matching level. One or both DistGrid objects are invalid.

ESMF_DISTGRIDMATCH_NONE: The lowest valid level of DistGrid matching. This indicates that the DistGrid objects don't match at any of the higher levels.

ESMF_DISTGRIDMATCH_INDEXSPACE: The index space covered by the two DistGrid objects is identical. However, differences between the two objects prevents a higher matching level.

ESMF_DISTGRIDMATCH_TOPOLOGY: The topology (i.e. index space and connections) defined by the two DistGrid objects is identical. However, differences between the two objects prevents a higher matching level.

ESMF_DISTGRIDMATCH_DECOMP: The index space decomposition defined by the two DistGrid objects is identical. However, differences between the two objects prevents a higher matching level.

ESMF_DISTGRIDMATCH_EXACT: The two DistGrid objects match in all aspects, including sequence indices. The only aspect that may differ between the two objects is their name.

ESMF_DISTGRIDMATCH_ALIAS: Both DistGrid variables are aliases to the exact same DistGrid object in memory.

37.3 Use and Examples

The following examples demonstrate how to create, use and destroy DistGrid objects. In order to produce complete and valid DistGrid objects all of the `ESMF_DistGridCreate()` calls require to be called in unison i.e. on *all* PETs of a component with a complete set of valid arguments.

37.3.1 Single tile DistGrid with regular decomposition

The minimum information required to create an `ESMF_DistGrid` object for a single tile with default decomposition are the min and max of the tile in index space. The following call creates a DistGrid for a 1D index space tile with elements from 1 through 1000.

```
distgrid = ESMF_DistGridCreate(minIndex=(/1/), maxIndex=(/1000/), rc=rc)
```

A default DELayout with 1 DE per PET will be created during the `ESMF_DistGridCreate()` call. The 1000 elements of the specified 1D tile are then block decomposed into the available DEs, and distributed across the PETs (same number as DEs by default). Assuming execution on 4 PETs, the (min) $\sim$ (max) indices of the DE-local blocks will be:

```
DE 0 - (1) ~ (250)
DE 1 - (251) ~ (500)
DE 2 - (501) ~ (750)
DE 3 - (751) ~ (1000)
```

DistGrids with rank > 1 can also be created with default decompositions, specifying only the min and max indices of the tile. The following creates a 2D DistGrid for a 5x5 tile with default decomposition.

```
distgrid = ESMF_DistGridCreate(minIndex=(/1,1/), maxIndex=(/5,5/), rc=rc)
```

The default decomposition for a DistGrid of rank N will be $(nDEs \times 1 \times ... \times 1)$, where $nDEs$ is the number of DEs in the DELayout and there are $N-1$ factors of 1. For the 2D example above this means a 4×1 regular decomposition if executed on 4 PETs and will result in the following DE-local LR regions:

```
DE 0 - (1,1) ~ (2,5)
DE 1 - (3,1) ~ (3,5)
DE 2 - (4,1) ~ (4,5)
DE 3 - (5,1) ~ (5,5)
```

In many cases the default decomposition will not suffice for higher rank DistGrids (rank > 1). For this reason a decomposition descriptor `regDecomp` argument is available during `ESMF_DistGridCreate()`. The following call creates a DistGrid on the same 2D tile as before, but now with a user specified regular decomposition of $2 \times 3 = 6$ DEs.

```
distgrid = ESMF_DistGridCreate(minIndex=(/1,1/), maxIndex=(/5,5/), &
  regDecomp=(/2,3/), rc=rc)
```

The default DE labeling sequence follows column major order for the `regDecomp` argument:

```
 -----------> 2nd dimension
 |  0  2  4
 |  1  3  5
 v
1st dimension
```

By default grid points along all dimensions are homogeneously divided between the DEs. The maximum element count difference between DEs along any dimension is 1. The (min) $\sim$ (max) indices of the DE-local blocks of the above example are as follows:

```
DE 0 - (1,1) ~ (3,2)
DE 1 - (4,1) ~ (5,2)
DE 2 - (1,3) ~ (3,4)
DE 3 - (4,3) ~ (5,4)
DE 4 - (1,5) ~ (3,5)
DE 5 - (4,5) ~ (5,5)
```

The specifics of the tile decomposition into DE-local LR domains can be modified by the optional `decompflag` argument. The following line shows how this argument is used to keep ESMF's default decomposition in the first dimension but move extra grid points of the second dimension to the last DEs in that direction. Extra elements occur if the number of DEs for a certain dimension does not evenly divide its extent. In this example there are 2 extra grid points for the second dimension because its extent is 5 but there are 3 DEs along this index space axis.

```
distgrid = ESMF_DistGridCreate(minIndex=(/1,1/), maxIndex=(/5,5/), &
  regDecomp=(/2,3/), decompflag=(/ESMF_DECOMP_BALANCED, &
  ESMF_DECOMP_RESTLAST/), rc=rc)
```

Now DE 4 and DE 5 will hold the extra elements along the 2nd dimension.

```
DE 0 - (1,1) ~ (3,1)
DE 1 - (4,1) ~ (5,1)
DE 2 - (1,2) ~ (3,2)
DE 3 - (4,2) ~ (5,2)
DE 4 - (1,3) ~ (3,5)
DE 5 - (4,3) ~ (5,5)
```

An alternative way of indicating the DE-local LR regions is to list the index space coordinate as given by the associated DistGrid tile for each dimension. For this 2D example there are two lists (dim 1) / (dim 2) for each DE:

```
DE 0 - (1,2,3) / (1)
DE 1 - (4,5)   / (1)
DE 2 - (1,2,3) / (2)
DE 3 - (4,5)   / (2)
DE 4 - (1,2,3) / (3,4,5)
DE 5 - (4,5)   / (3,4,5)
```

Information about DE-local LR regions in the latter format can be obtained from the DistGrid object by use of `ESMF_DistGridGet()` methods:

```
allocate(dimExtent(2, 0:5)) ! (dimCount, deCount)
call ESMF_DistGridGet(distgrid, delayout=delayout, &
  indexCountPDe=dimExtent, rc=rc)
if (rc /= ESMF_SUCCESS) call ESMF_Finalize(endflag=ESMF_END_ABORT)
call ESMF_DELayoutGet(delayout, localDeCount=localDeCount, rc=rc)
if (rc /= ESMF_SUCCESS) call ESMF_Finalize(endflag=ESMF_END_ABORT)
allocate(localDeToDeMap(0:localDeCount-1))
call ESMF_DELayoutGet(delayout, localDeToDeMap=localDeToDeMap, rc=rc)
if (rc /= ESMF_SUCCESS) call ESMF_Finalize(endflag=ESMF_END_ABORT)
do localDe=0, localDeCount-1
  de = localDeToDeMap(localDe)
  do dim=1, 2
    allocate(localIndexList(dimExtent(dim, de))) ! allocate list
                                                 ! to hold indices
    call ESMF_DistGridGet(distgrid, localDe=localDe, dim=dim, &
      indexList=localIndexList, rc=rc)
    if (rc /= ESMF_SUCCESS) call ESMF_Finalize(endflag=ESMF_END_ABORT)
    print *, "local DE ", localDe," - DE ",de, &
      " localIndexList along dim=", dim," :: ", localIndexList
    deallocate(localIndexList)
  enddo
enddo
deallocate(localDeToDeMap)
deallocate(dimExtent)
```

The advantage of the `localIndexList` format over the minIndex/maxIndex format is that it can be used directly for DE-local to tile index dereferencing. Furthermore the `localIndexList` allows to express very general decompositions such as the cyclic decompositions in the first dimension generated by the following call:

```
distgrid = ESMF_DistGridCreate(minIndex=(/1,1/), maxIndex=(/5,5/), &
  regDecomp=(/2,3/), &
  decompflag=(/ESMF_DECOMP_CYCLIC,ESMF_DECOMP_RESTLAST/), rc=rc)
```

with decomposition:

```
DE 0 - (1,3,5) / (1)
DE 1 - (2,4)   / (1)
DE 2 - (1,3,5) / (2)
DE 3 - (2,4)   / (2)
DE 4 - (1,3,5) / (3,4,5)
DE 5 - (2,4)   / (3,4,5)
```

Finally, a DistGrid object is destroyed by calling

```
call ESMF_DistGridDestroy(distgrid, rc=rc)
```

37.3.2 DistGrid and DELayout

The examples of this section use the 2D DistGrid of the previous section to show the interplay between DistGrid and DELayout. By default, i.e. without specifying the `delayout` argument, a DELayout will be created during DistGrid

creation that provides as many DEs as the DistGrid object requires. The implicit call to `ESMF_DELayoutCreate()` is issued with a fixed number of DEs and default settings in all other aspects. The resulting DE to PET mapping depends on the number of PETs of the current VM context. Assuming 6 PETs in the VM

```
distgrid = ESMF_DistGridCreate(minIndex=(/1,1/), maxIndex=(/5,5/), &
  regDecomp=(/2,3/), rc=rc)
```

will result in the following domain decomposition in terms of DEs

```
0  2  4
1  3  5
```

and their layout or distribution over the available PETs:

```
DE 0  -> PET 0
DE 1  -> PET 1
DE 2  -> PET 2
DE 3  -> PET 3
DE 4  -> PET 4
DE 5  -> PET 5
```

Running the same example on a 4 PET VM will not change the domain decomposition into 6 DEs as specified by

```
0  2  4
1  3  5
```

but the layout across PETs will now contain multiple DE-to-PET mapping with default cyclic distribution:

```
DE 0  -> PET 0
DE 1  -> PET 1
DE 2  -> PET 2
DE 3  -> PET 3
DE 4  -> PET 0
DE 5  -> PET 1
```

Sometimes it may be desirable for performance tuning to construct a DELayout with specific characteristics. For instance, if the 6 PETs of the above example are running on 3 nodes of a dual-SMP node cluster and there is a higher communication load along the first dimension of the model than along the second dimension it would be sensible to place DEs according to this knowledge.

The following example first creates a DELayout with 6 DEs where groups of 2 DEs are to be in fast connection. This DELayout is then used to create a DistGrid.

```
delayout = ESMF_DELayoutCreate(deCount=6, deGrouping=(/(i/2,i=0,5)/), rc=rc)

distgrid = ESMF_DistGridCreate(minIndex=(/1,1/), maxIndex=(/5,5/), &
  regDecomp=(/2,3/), delayout=delayout, rc=rc)
```

This will ensure a distribution of DEs across the cluster resource in the following way:

```
 0   2   4
 1   3   5
SMP SMP SMP
```

The interplay between DistGrid and DELayout may at first seem complicated. The simple but important rule to understand is that DistGrid describes a domain decomposition and each domain is labeled with a DE number. The DELayout describes how these DEs are laid out over the compute resources of the VM, i.e. PETs. The DEs are purely logical elements of decomposition and may be relabeled to fit the algorithm or legacy code better. The following example demonstrates this by describing the exact same distribution of the domain data across the fictitious cluster of SMP-nodes with a different choice of DE labeling:

```
delayout = ESMF_DELayoutCreate(deCount=6, deGrouping=(/(mod(i,3),i=0,5)/), &
  rc=rc)

distgrid = ESMF_DistGridCreate(minIndex=(/1,1/), maxIndex=(/5,5/), &
  regDecomp=(/2,3/), deLabelList=(/0,3,1,4,2,5/), delayout=delayout, rc=rc)
```

Here the `deLabelList` argument changes the default DE label sequence from column major to row major. The DELayout compensates for this change in DE labeling by changing the `deGrouping` argument to map the first dimension to SMP nodes as before. The decomposition and layout now looks as follows:

```
 0   1   2
 3   4   5
SMP SMP SMP
```

Finally, in order to achieve a completely user-defined distribution of the domain data across the PETs of the VM a DELayout may be created from a `petMap` before using it in the creation of a DistGrid. If for instance the desired distribution of a 2 x 3 decomposition puts the DEs of the first row onto 3 separate PETs (PET 0, 1, 2) and groups the DEs of the second row onto PET 3 a `petMap` must first be setup that takes the DE labeling of the DistGrid into account.The following lines of code result in the desired distribution using column major DE labeling by first create a DELayout and then using it in the DistGrid creation.

```
delayout = ESMF_DELayoutCreate(petMap=(/0,3,1,3,2,3/), rc=rc)

distgrid = ESMF_DistGridCreate(minIndex=(/1,1/), maxIndex=(/5,5/), &
  regDecomp=(/2,3/), delayout=delayout, rc=rc)
```

This decomposes the global domain into

```
 0   2   4
 1   3   5
```

and associates the DEs to the following PETs:

```
DE 0  -> PET 0
DE 1  -> PET 3
```

```
DE 2  -> PET 1
DE 3  -> PET 3
DE 4  -> PET 2
DE 5  -> PET 3
```

37.3.3 Single tile DistGrid with decomposition by DE blocks

In the previous examples the DistGrid objects were created with regular decompositions. In some cases a regular decomposition may not be the most natural choice to decompose and distribute the index space. The DE block version of `ESMF_DistGridCreate()` offers more control over the precise decomposition. The following example shows how the `deBlockList` argument is used to determine exactly what index space block ends up on each DE.

A single 5x5 tile is decomposed into 6 DEs. To this end a list is constructed that holds the min and max indices of all six DE blocks. The DE blocks must be constructed to cover the index space without overlapping each other. It is okay to leave holes in the index space, i.e. the DE blocks do not completely cover the index space tile.

```
allocate(deBlockList(2, 2, 6))  ! (dimCount, 2, deCount)
deBlockList(:,1,1) = (/1,1/)  ! minIndex  1st deBlock
deBlockList(:,2,1) = (/3,2/)  ! maxIndex  1st deBlock
deBlockList(:,1,2) = (/4,1/)  ! minIndex  2nd deBlock
deBlockList(:,2,2) = (/5,2/)  ! maxIndex  2nd deBlock
deBlockList(:,1,3) = (/1,3/)
deBlockList(:,2,3) = (/2,4/)
deBlockList(:,1,4) = (/3,3/)
deBlockList(:,2,4) = (/5,4/)
deBlockList(:,1,5) = (/1,5/)
deBlockList(:,2,5) = (/3,5/)
deBlockList(:,1,6) = (/4,5/)  ! minIndex  6th deBlock
deBlockList(:,2,6) = (/5,5/)  ! maxInbex  6th deBlock

distgrid = ESMF_DistGridCreate(minIndex=(/1,1/), maxIndex=(/5,5/), &
  deBlockList=deBlockList, rc=rc)
```

37.3.4 2D multi-tile DistGrid with regular decomposition

Creating a DistGrid from a list of LR tiles is a straightforward extension of the single tile case. The first four arguments of `ESMF_DistGridCreate()` are promoted to rank 2 where the second dimension is the tile index.

The following 2D multi-tile domain consisting of 3 LR tiles will be used in the examples of this section:

```
----------------------------------------> 2nd dim
|
|                    (1,11)-----(1,20)
|                    |               |
|                    |               |
|                    |               |
|                    |               |
|                    |               |
|                    (10,11)---(10,20)
|   (11,1)----(11,10)(11,11)---(11,20)
|   |                ||               |
```

```
    |  |               ||               |
    |  |               ||               |
    |  |               ||               |
    |  |               ||               |
    |  (20,1)----(20,10)(20,11)---(20,20)
    |
    |
    v
   1st dim
```

The first step in creating a multi-tile global domain is to construct the `minIndex` and `maxIndex` arrays.

```
allocate(minIndexPTile(2,3))    ! (dimCount, tileCount)
allocate(maxIndexPTile(2,3))    ! (dimCount, tileCount)
minIndexPTile(:,1) = (/11,1/)
maxIndexPTile(:,1) = (/20,10/)
minIndexPTile(:,2) = (/11,11/)
maxIndexPTile(:,2) = (/20,20/)
minIndexPTile(:,3) = (/1,11/)
maxIndexPTile(:,3) = (/10,20/)
```

Next the regular decomposition for each tile is set up in the `regDecomp` array. In this example each tile is associated with a single DE.

```
allocate(regDecompPTile(2,3))    ! (dimCount, tileCount)
regDecompPTile(:,1) = (/1,1/)    ! one DE
regDecompPTile(:,2) = (/1,1/)    ! one DE
regDecompPTile(:,3) = (/1,1/)    ! one DE
```

Finally the DistGrid can be created by calling

```
distgrid = ESMF_DistGridCreate(minIndexPTile=minIndexPTile, &
  maxIndexPTile=maxIndexPTile, regDecompPTile=regDecompPTile, rc=rc)
```

The default DE labeling sequence is identical to the tile labeling sequence and follows the sequence in which the tiles are defined during the create call. However, DE labels start at 0 whereas tile labels start at 1. In this case the DE labels look as:

```
        2
    0   1
```

Each tile can be decomposed differently into DEs. The default DE labeling follows the column major order for each tile. This is demonstrated in the following case where the multi-tile global domain is decomposed into 9 DEs,

```
regDecompPTile(:,1) = (/2,2/)    ! 4 DEs
regDecompPTile(:,2) = (/1,3/)    ! 3 DEs
regDecompPTile(:,3) = (/2,1/)    ! 2 DEs

distgrid = ESMF_DistGridCreate(minIndexPTile=minIndexPTile, &
  maxIndexPTile=maxIndexPTile, regDecompPTile=regDecompPTile, rc=rc)
```

resulting in the following decomposition:

```
            +-------+
            |   7   |
            |       |
            |   8   |
    +-------+-------+
    | 0   2 |       |
    |       | 4 5 6 |
    | 1   3 |       |
    +-------+-------+


    DE 0 - (11,1)  ~ (15,5)
    DE 1 - (16,1)  ~ (20,5)
    DE 2 - (11,6)  ~ (15,10)
    DE 3 - (16,6)  ~ (20,10)
    DE 4 - (11,11) ~ (20,14)
    DE 5 - (11,15) ~ (20,17)
    DE 6 - (11,18) ~ (20,20)
    DE 7 - (1,11)  ~ (5,20)
    DE 8 - (6,11)  ~ (10,20)
```

The `decompflag` and `deLabelList` arguments can be used much like in the single LR domain case to overwrite the default grid decomposition (per tile) and to change the overall DE labeling sequence, respectively.

37.3.5 Arbitrary DistGrids with user-supplied sequence indices

The third, and most flexible way of creating an ESMF DistGrid object is by specifying the arbitrary sequence indices of all the index space elements associated with a particular DE. The concept of sequence index comes into the DistGrid class through the support it implements for the communication methods of higher classes: Arrays and Fields. This support is based by associating a unique *sequence index* with each DistGrid index tuple. The sequence index can be used to address every Array or Field element. By default, the DistGrid does not actually generate and store the sequence index of each element. Instead a default sequence through the elements is implemented in the DistGrid code. This default sequence is used internally when needed.

The DistGrid class provides two `ESMF_DistGridCreate()` calls that allow the user to specify arbitrary sequence indices, overriding the use of the default sequence index scheme. The user sequence indices are passed to the DistGrid in form of 1d Fortran arrays, one array on each PET. The local size of this array on each PET determines the number of DistGrid elements on the PET. The supplied sequence indices must be unique across all PETs.

```
allocate(arbSeqIndexList(10))   ! each PET will have 10 elements

do i=1, 10
  arbSeqIndexList(i) = (i-1)*petCount + localPet ! initialize unique
                                                 ! seq. indices
enddo
```

A default DELayout will be created automatically during `ESMF_DistGridCreate()`, associating 1 DE per PET.

```
distgrid = ESMF_DistGridCreate(arbSeqIndexList=arbSeqIndexList, rc=rc)
```

The user provided sequence index array can be deallocated once it has been used.

```
deallocate(arbSeqIndexList)
```

The `distgrid` object can be used just like any other DistGrid object. The "arbitrary" nature of `distgrid` will only become visible during Array or Field communication methods, where source and destination objects map elements according to the sequence indices provided by the associated DistGrid objects.

```
call ESMF_DistGridDestroy(distgrid, rc=rc)
```

The second `ESMF_DistGridCreate()` call, that accepts the `arbSeqIndexList` argument, allows the user to specify additional, regular DistGrid dimensions. These additional DistGrid dimensions are not decomposed across DEs, but instead are simply "added" or "multiplied" to the 1D arbitrary dimension.

The same `arbSeqIndexList` array as before is used to define the user supplied sequence indices.

```
allocate(arbSeqIndexList(10))   ! each PET will have 10 elements

do i=1, 10
  arbSeqIndexList(i) = (i-1)*petCount + localPet  ! initialize unique
                                                  ! seq. indices
enddo
```

The additional DistGrid dimensions are specified in the usual manner using `minIndex` and `maxIndex` arguments. The `dimCount` of the resulting DistGrid is the size of the `minIndex` and `maxIndex` arguments plus 1 for the arbitrary dimension. The `arbDim` argument is used to indicate which or the resulting DistGrid dimensions is associated with the arbitrary sequence indices provided by the user.

```
distgrid = ESMF_DistGridCreate(arbSeqIndexList=arbSeqIndexList, &
  arbDim=1, minIndexPTile=(/1,1/), maxIndexPTile=(/5,7/), rc=rc)

deallocate(arbSeqIndexList)

call ESMF_DistGridDestroy(distgrid, rc=rc)
```

37.3.6 DistGrid Connections - Definition

By default all of the edges of the index space tiles making up a DistGrid are open. There is no sense of connectedness between the tiles. This situation is shown for a simple 2 tile DistGrid.

```
allocate(minIndexPTile(2,2))    ! (dimCount, tileCount)
allocate(maxIndexPTile(2,2))    ! (dimCount, tileCount)
minIndexPTile(:,1) = (/1,1/)
maxIndexPTile(:,1) = (/10,10/)
minIndexPTile(:,2) = (/11,1/)
maxIndexPTile(:,2) = (/20,10/)

distgrid = ESMF_DistGridCreate(minIndexPTile=minIndexPTile, &
  maxIndexPTile=maxIndexPTile, rc=rc)
```

Figure 21: Two 10x10 index space tiles next to each other without connections. Both tiles operate in the same global index space chosen by `ESMF_INDEX_GLOBAL` when creating the DistGrid object. The index tuples held by the DistGrid are represented by the vertices of the shown grid structure. The index tuple (11,3), which is referenced in the text, is marked by a black circle.

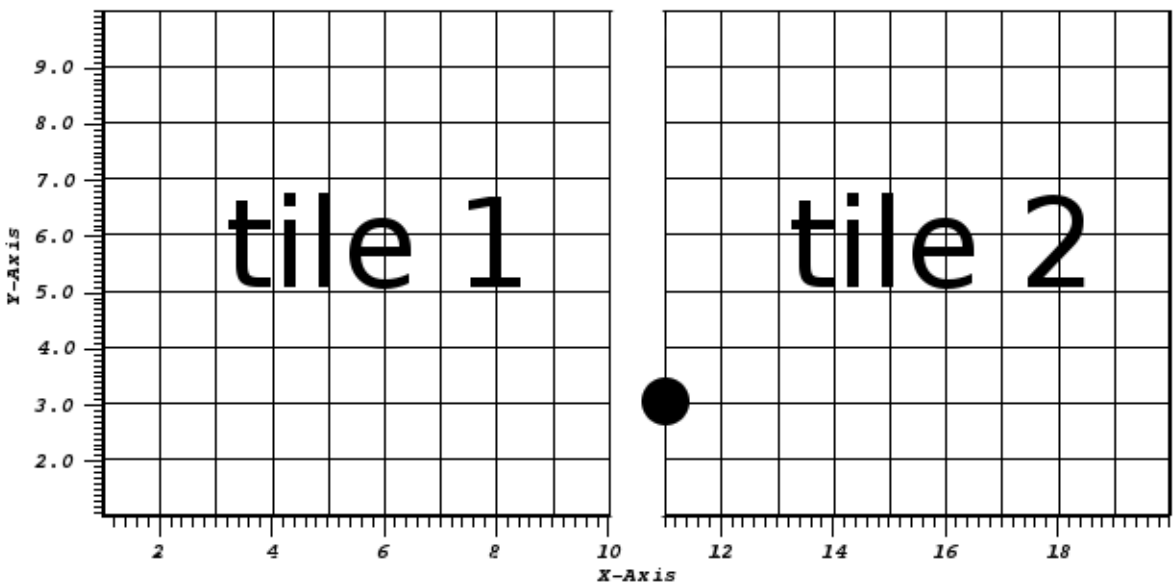

Connections between index space tiles are specified during DistGrid creation through the `connectionList` argument. This argument takes a list of elements of `type(ESMF_DistGridConnection)`. Each element refers to one specific connection between any two tiles.

Each connection is defined by 4 parameters:

- `tileIndexA` - The tile index of the "A" side of the connection.
- `tileIndexB` - The tile index of the "B" side of the connection.
- `positionVector` - A vector containing information about the translation of the index space of tile "B" relative to tile "A". This vector has as many components as there are index space dimensions.
- `orientationVector` - A vector containing information about the rotation of the index space of tile "B" relative to tile "A". This vector has as many components as there are index space dimensions.

The underlying principle of the DistGrid connections is that all supported connections can be written as a forward transformation of the form

$$\vec{a} \rightarrow \vec{b} = \hat{R}\vec{a} + \vec{P}. \tag{4}$$

This transform takes the index space tuple $\vec{a}$ of a point in the reference frame of tile "A" and expresses it as tuple $\vec{b}$ in terms of the index space defined by tile "B". Here $\hat{R}$ is a general rotation operator, and $\vec{P}$ is a translation vector in index space. $\hat{R}$ and $\vec{P}$ correspond to the `orientationVector` and `positionVector`, respectively.

As an example consider the index space point marked by the black circle in figure 21. In the reference frame of tile 1 the point has an index tuple of (11,3). Because of the global index space (`ESMF_INDEX_GLOBAL`), the point has the same index tuple of (11,3) in the reference frame of tile 2. Therefore, the connection that connects the right edge of

tile 1 with the left edge of tile 2 has $\hat{R} = \mathbb{1}$ (default orientation) and $\vec{P} = (0, 0)$. Therefore the connection can be set by the following code. The resulting situation is shown in figure 22.

```
allocate(connectionList(1))
call ESMF_DistGridConnectionSet(connection=connectionList(1), &
  tileIndexA=1, tileIndexB=2, positionVector=(/0,0/), rc=rc)

distgrid = ESMF_DistGridCreate(minIndexPTile=minIndexPTile, &
  maxIndexPTile=maxIndexPTile, connectionList=connectionList, &
  rc=rc)  ! defaults to ESMF_INDEX_GLOBAL
```

The same topology can be defined for `ESMF_INDEX_DELOCAL` indexing. However, the `positionVector` must be adjusted for the fact that now the same point in index space has different index tuples depending on what tile's reference frame is used.

With local indexing both tiles start at (1,1) and end at (10,10).

```
allocate(minIndexPTile(2,2))    ! (dimCount, tileCount)
allocate(maxIndexPTile(2,2))    ! (dimCount, tileCount)
minIndexPTile(:,1) = (/1,1/)
maxIndexPTile(:,1) = (/10,10/)
minIndexPTile(:,2) = (/1,1/)
maxIndexPTile(:,2) = (/10,10/)
```

To see the impact that the index scheme has on the `positionVector`, again consider the same highlighted index space point. The index tuple for this point is still (11,3) in the reference frame of tile 1 (tile "A" of the connection). However, in the reference frame of of tile 2 (tile "B" of the connection)) it has changed to (1,3) due to local indexing. Therefore, using form (4), we find that the position vector must be $\vec{P} = \vec{b} - \vec{a} = (1, 3) - (11, 3) = (-10, 0)$.

```
allocate(connectionList(1))
call ESMF_DistGridConnectionSet(connection=connectionList(1), &
  tileIndexA=1, tileIndexB=2, positionVector=(/-10,0/), rc=rc)

distgrid = ESMF_DistGridCreate(minIndexPTile=minIndexPTile, &
  maxIndexPTile=maxIndexPTile, connectionList=connectionList, &
  indexflag=ESMF_INDEX_DELOCAL, rc=rc)
```

Further note that every forward transformation has an associated inverse, or backward transformation from tile "B" into the reference frame of tile "A". Inverting the forward transform yields the backward transform as

$$\vec{b} \rightarrow \vec{a} = \hat{R}^{-1}\vec{b} - \hat{R}^{-1}\vec{P}. \tag{5}$$

The DistGrid implicitly considers the corresponding backward connection for every forward connection that is specified explicitly. In other words, DistGrid connections are bidirectional.

Before going into the details of how the `orientationVector` and `positionVector` arguments correspond to $\hat{R}$ and $\vec{P}$ for more complex cases, it is useful to explore what class of connections are covered by the above introduced form (4) of $\vec{a} \rightarrow \vec{b}$.

First consider the case where tile "A" is rotated by $\hat{R}$ relative to tile "B" around a general pivot point $\vec{p}$ given in terms of the index space of tile "A":

Figure 22: Two 10x10 index space tiles next to each other with a single connection between the right edge of tile 1 and the left edge of tile 2. The index tuple (11,3), which is referenced in the text, is marked by a black circle.

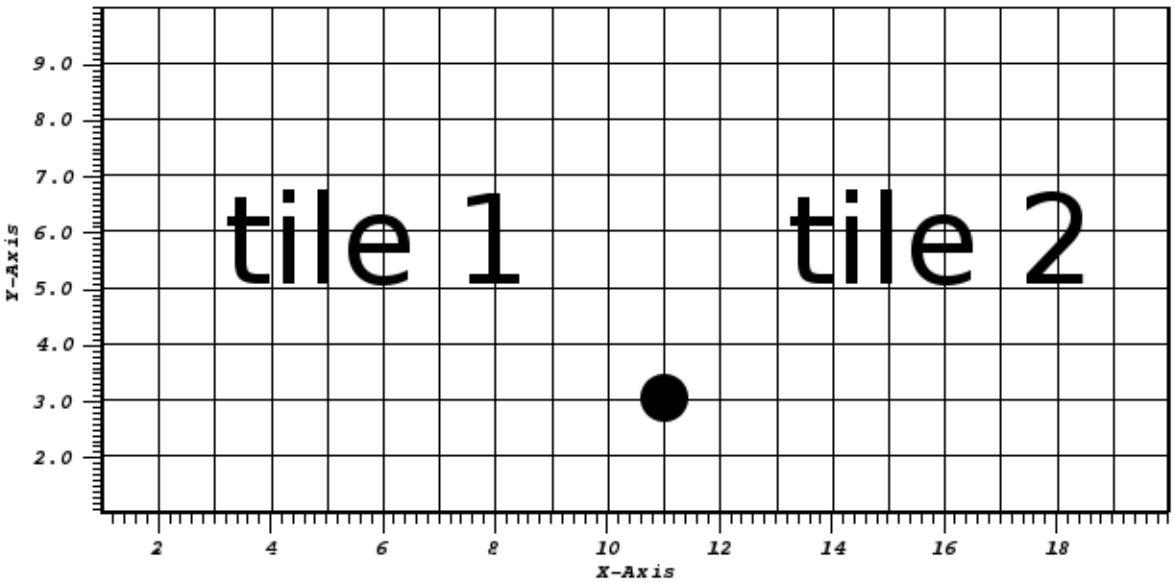

$$\begin{aligned} \vec{a} \rightarrow \vec{b} &= \hat{R}(\vec{a} - \vec{p}) + \vec{p} \\ &= \hat{R}\vec{a} + (\mathbb{1} - \hat{R})\vec{p} \end{aligned} \tag{6}$$

With substitution

$$\vec{P} = (\mathbb{1} - \hat{R})\vec{p} \tag{7}$$

form (4) is recovered.

Next consider transform (6) followed by a translation $\vec{t}$ of tile "B" relative to tile "A":

$$\vec{a} \rightarrow \vec{b} = \hat{R}\vec{a} + (\mathbb{1} - \hat{R})\vec{p} + \vec{t}. \tag{8}$$

Again form (4) is recovered with the appropriate subsitution:

$$\vec{P} = (\mathbb{1} - \hat{R})\vec{p} + \vec{t}. \tag{9}$$

Equation (9) is the general definition of the `positionVector` argument for DistGrid connections. It allows two tiles to be connected according to the relationship expressed by (8). Note that this formualation of tile connections is more general than connecting an edge of a tile to the edge of another tile. Instead a DistGrid connection is specified as a general relationship between the two index spaces, accounting for possible rotation and translation. This formuation supports situations where some elements of the connected tiles overlap with each other in index space. The ESMF DistGrid class leverages this feature when representing topologies that lead to redundancies of elements. Examples for this are the bipolar cut line in a tripole grid, or the edges of a cubed sphere.

Table 3: The 8 unique rotational operations in 2 dimensional index space. The associated `orientationVector` argument for each operation is also shown.

	$\hat{R}$	`orientationVector`
$0°$	$\begin{pmatrix} 1 & 0 \\ 0 & 1 \end{pmatrix}$	$\begin{pmatrix} 1 \\ 2 \end{pmatrix}$
$90°$	$\begin{pmatrix} 0 & -1 \\ 1 & 0 \end{pmatrix}$	$\begin{pmatrix} -2 \\ 1 \end{pmatrix}$
$180°$	$\begin{pmatrix} -1 & 0 \\ 0 & -1 \end{pmatrix}$	$\begin{pmatrix} -1 \\ -2 \end{pmatrix}$
$270°$	$\begin{pmatrix} 0 & 1 \\ -1 & 0 \end{pmatrix}$	$\begin{pmatrix} 2 \\ -1 \end{pmatrix}$
$0°$ + inversion dim 1	$\begin{pmatrix} -1 & 0 \\ 0 & 1 \end{pmatrix}$	$\begin{pmatrix} -1 \\ 2 \end{pmatrix}$
$0°$ + inversion dim 2	$\begin{pmatrix} 1 & 0 \\ 0 & -1 \end{pmatrix}$	$\begin{pmatrix} 1 \\ -2 \end{pmatrix}$
$90°$ + inversion dim 1	$\begin{pmatrix} 0 & 1 \\ 1 & 0 \end{pmatrix}$	$\begin{pmatrix} 2 \\ 1 \end{pmatrix}$
$90°$ + inversion dim 2	$\begin{pmatrix} 0 & -1 \\ -1 & 0 \end{pmatrix}$	$\begin{pmatrix} -2 \\ -1 \end{pmatrix}$

By definition, DistGrid connections associate an index tuple of one tile with exactly one index tuple expressed in the reference frame of another tile. This restricts the supported rotations $\hat{R}$ to multiples of $90°$. Also allowing invesion of index space dimensions leads to 8 unique operations in two dimension shown in table 3.

The `orientationVector` is simply a more compact format holding the same information provided by the 8 rotational matrices. The first (or top) element of the orientation vector indicates which dimension of the tile "A" index tuple is used for the first dimension of the tile "B" tuple. The second (or bottom) element of the orientation vector indicates which dimension of the tile "A" index tuple is used for the second dimenson of the tile "B" tuple. If an orientation vector entry is negative, the sign of the associated tuple element is inverted when going from tile "A" to tile "B" reference frame. Table 3 provides the corresponding `orientationVector` argument for each of the 8 2D rotational operations.

37.3.7 DistGrid Connections - Single tile periodic and pole connections

The concept of DistGrid connections is not limited to cases with multiple tiles. Even a single tile DistGrid can have connections. In this instance `tileA` and `tileB` simply reference the same tile. A very common case is that of a single tile with periodic boundary conditions.

First consider a single tile DistGrid without connections.

```
distgrid = ESMF_DistGridCreate(minIndex=(/1,1/), maxIndex=(/50,20/), rc=rc)
```

In order to better visualize the topology, the first index space dimension is associated with the longitude ($0°..360°$), and the second dimension with latitude ($-80°.. + 80°$) of the unit sphere (using an ESMF_Grid object) as shown in figure 23.

A single DistGrid connection is needed to connect the right edge of the index space tile with its left edge. Connecting a tile with itself in such manner leads to a periodic topology.

First the `connectionList` needs to be allocated for a single connection. Then the connection is defined with both `tileIndexA` and `tileIndexB` set to 1, referring to the first, and only tile in this case.

Figure 23: A single 50x20 index space tile without connections. For better visualization the index space points are plotted on the unit circle. The gap between the right and left edge of the tile is visible. Further the top and the bottom edges of the tile are visibly without connection.

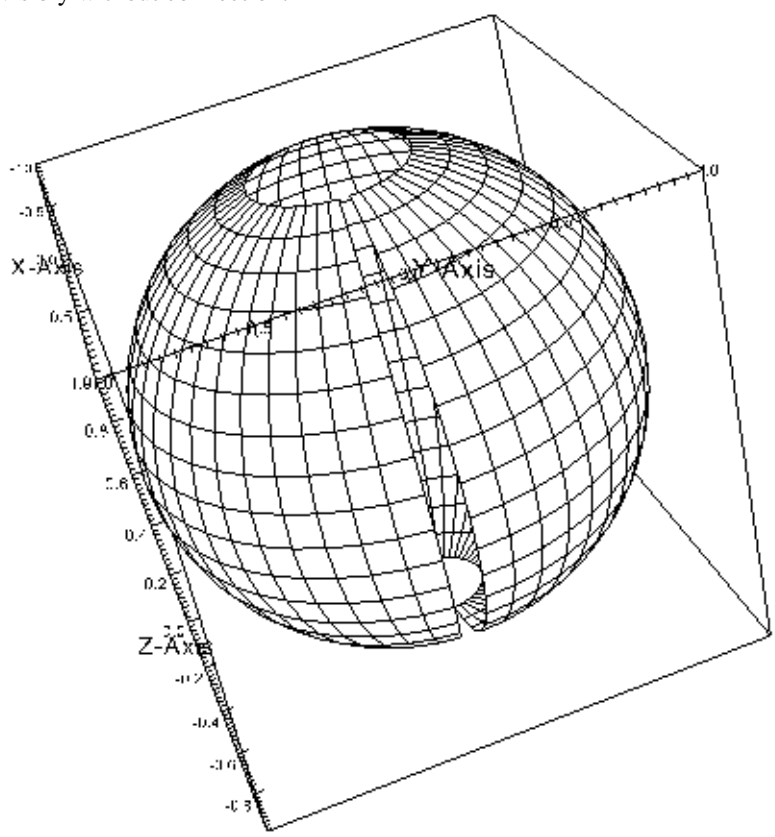


```
allocate(connectionList(1))
call ESMF_DistGridConnectionSet(connection=connectionList(1), &
  tileIndexA=1, tileIndexB=1, positionVector=(/-50,0/), rc=rc)
```

The `positionVector` is determined by transformation (4), the fact that there is no rotation involved, and that stepping over the right edge needs to connect back to the left edge. Therefore $\vec{P} = \vec{b} - \vec{a} = (1, j) - (51, j) = (-50, 0)$. Here j stands for an arbitrary value along the second index space dimension.

Creating a DistGrid on the same index space tile, but with this connection, results in a periodic boundary condition along the first dimension. This is shown in figure 24.

```
distgrid = ESMF_DistGridCreate(minIndex=(/1,1/), maxIndex=(/50,20/), &
  connectionList=connectionList, rc=rc)
```

In general it is more useful to express the position vector of a connection in terms of the tile minIndex and maxIndex components. For this we define the same index space tile in a set of variables.

```
allocate(minIndex(2))    ! (dimCount)
allocate(maxIndex(2))    ! (dimCount)
minIndex(:) = (/1,1/)
maxIndex(:) = (/50,20/)
```

Figure 24: A single 50x20 index space tile with periodic connection along the first dimension.

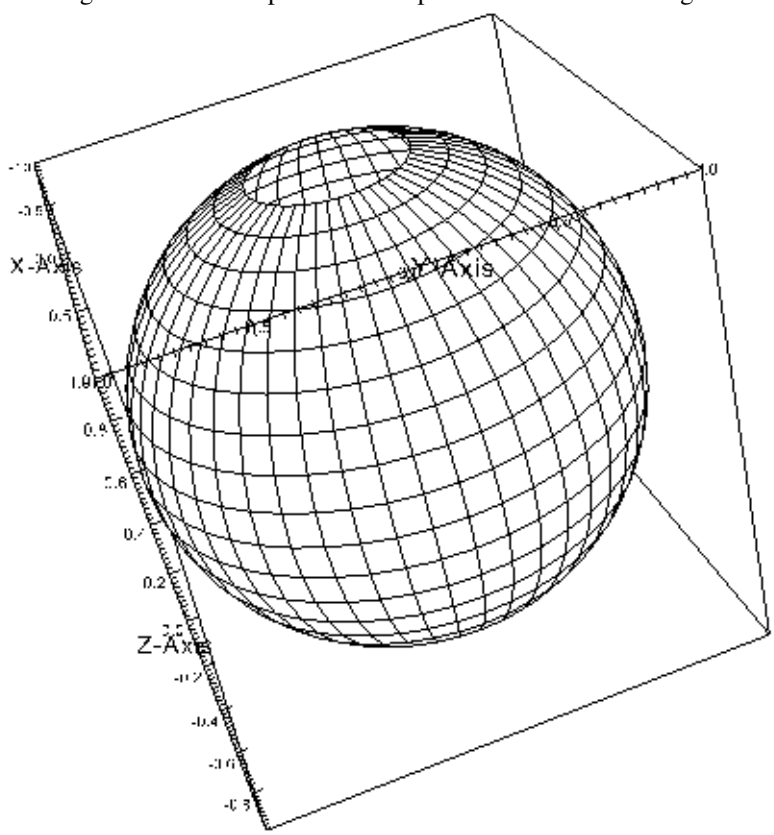

Now we can code any connection on this tile in terms of `minIndex` and `maxIndex`. For purpose of demonstration we define periodic boundary conditions along both index space dimensions. The resulting torus topology is depicted in figure 25.

```
allocate(connectionList(2))
call ESMF_DistGridConnectionSet(connection=connectionList(1), & ! 1st connection
  tileIndexA=1, tileIndexB=1, &   ! periodic along i
  positionVector=(/ -(maxIndex(1)-minIndex(1)+1) , 0/), &
  rc=rc)

call ESMF_DistGridConnectionSet(connection=connectionList(2), & ! 2nd connection
  tileIndexA=1, tileIndexB=1, &   ! periodic along j
  positionVector=(/ 0 , -(maxIndex(2)-minIndex(2)+1) /), &
  rc=rc)

distgrid = ESMF_DistGridCreate(minIndex=minIndex, maxIndex=maxIndex, &
  connectionList=connectionList, rc=rc)
```

While the topology shown in figure 25 is that of a torus, the coordinates chosen are actually those of a sphere. Next we replace the periodic connection along j (i.e. the second index space dimension) with a more fitting pole connection at the top of the sphere (i.e. at j_{max}).

Figure 25: A single 50x20 index space tile with periodic connections along both directions. The topology is that of a torus, however, because of the chosen spherical coordinates the connection through the middle has the shape of a cylinder.

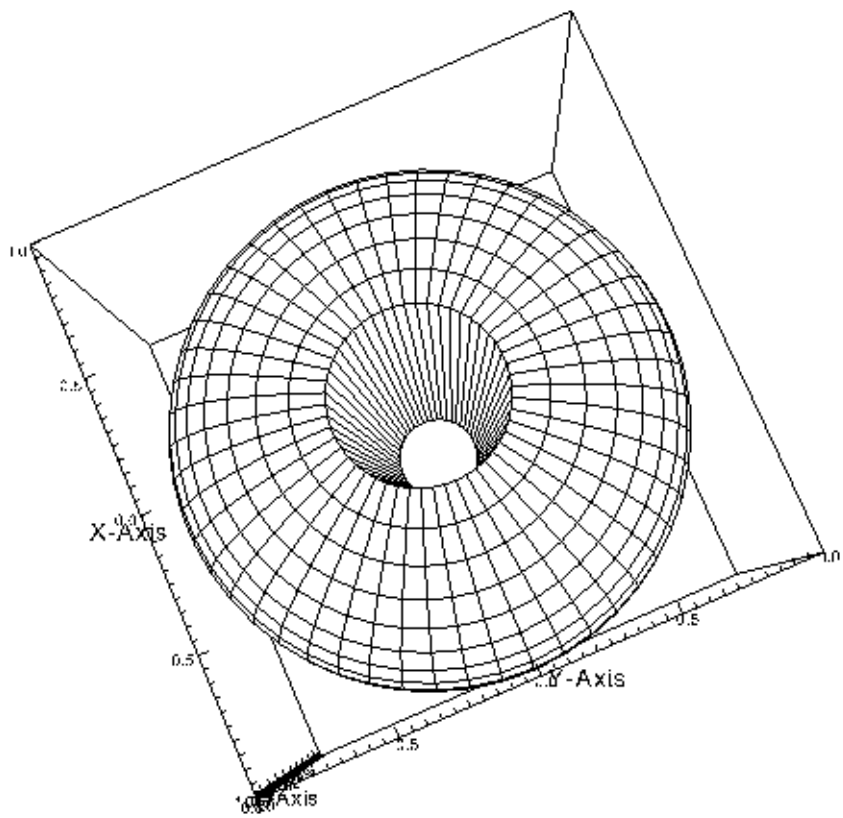

For the orientation vector associated with a regular pole connection at j_{max} we first look at how the two index space directions are affected. Looking at a point with i along the first dimension, and a second point $i+1$ that is just to the right of the first point, we see that as the pole is being crossed, the second point maps just right of the first point. Therefore, the orientation of the first index space dimension is unaffected by the pole connection. However, for the second dimension we find that increasing j on one side corresponds to a dereasing j across the pole. We thus have found the general fact that `orientationVector=(1,-2)` for a pole connection across the j direction.

In order to find the position vector of the polar connection we consider starting at a general point (i,j_{max}) at the top edge of the tile. Crossing the pole this takes us to a point that is again right on the top edge with $j = j_{max}$, and is 180° rotated along the first dimension. This means $i = mod(i + i_{size}/2, i_{size})$, with $i_{size} = i_{max} - i_{min} + 1$. In practice the modulo operation is automatically taken care of by the periodic connection along i. We can therefore write:

$$\vec{a} = \begin{pmatrix} i \\ j_{max}+1 \end{pmatrix} \rightarrow \vec{b} = \begin{pmatrix} i + i_{size}/2 \\ j_{max} \end{pmatrix}. \tag{10}$$

Using this observation, together with table 3 to translate the polar `orientationVector` into a standard rotation operation $\hat{R}$, we get the position vector from equation (4):

$$\vec{P} \quad = \quad \vec{b} - \hat{R}\vec{a}$$

$$
\begin{aligned}
&= \begin{pmatrix} i + i_{size}/2 \\ j_{max} \end{pmatrix} - \begin{pmatrix} 1 & 0 \\ 0 & -1 \end{pmatrix} \begin{pmatrix} i \\ j_{max} + 1 \end{pmatrix} \\
&= \begin{pmatrix} i_{size}/2 \\ 2j_{max} + 1 \end{pmatrix}. \qquad (11)
\end{aligned}
$$

```
allocate(connectionList(2))
call ESMF_DistGridConnectionSet(connection=connectionList(1), & ! 1st connection
  tileIndexA=1, tileIndexB=1, &   ! periodic along i
  positionVector=(/-(maxIndex(1)-minIndex(1)+1),0/), &
  rc=rc)

call ESMF_DistGridConnectionSet(connection=connectionList(2), & ! 2nd connection
  tileIndexA=1, tileIndexB=1, &   ! pole at j_max
  orientationVector=(/1,-2/), &
  positionVector=(/ (maxIndex(1)-minIndex(1)+1)/2 , 2*maxIndex(2)+1 /), &
  rc=rc)

distgrid = ESMF_DistGridCreate(minIndex=minIndex, maxIndex=maxIndex, &
  connectionList=connectionList, rc=rc)
```

The pole connection at j_{max} can clearly be seen in figure 26. Note that the chosen perspective hides the fact that the lower edge of the index space tile remains open. In other words there is still a hole at the bottom of the sphere that cannot be seen. Only three of the four sides have been connected so far: The first connection connects the left and the right tile edges. The second connection connects the top edge to itself to form the pole. A third connection would be needed, e.g. to form a pole at the bottom edge much like the top edge. This would then complete a perfectly spherical topology with a single tile.

The final single tile topology discussed in this section is that of a tripole. A tripolar sphere has the typical spherical periodic boundary condition along one direction (e.g. connecting the left and the right tile edge), and a regular monopole at one of the other edges of the tile. However, instead of defining a second monopole at the opposite edge, a *bipole* connection is chosen.

Topologically a bipole connection can be thought of folding the respective edge at the middle point back onto itself. Assuming the bipole at the top edge, i.e. at j_{max}, we get mappings across the bipole of $(i_{min}, j_{max}+1) \rightarrow (i_{max}, j_{max})$, $(i_{min}+1, j_{max}+1) \rightarrow (i_{max}-1, j_{max})$, and so forth. This means that compared to the regular pole connection, the bipolar orientation vector reverses the i direction in addition to the j direction: `orientationVector=(-1,-2)`.

Using the bipolar mapping just mentioned for a point at i_{min}, together with table 3 to translate the polar `orientationVector` into a standard rotation operation $\hat{R}$, we can solve for the position vector according to equation (4):

$$
\begin{aligned}
\vec{P} &= \vec{b} - \hat{R}\vec{a} \\
&= \begin{pmatrix} i_{max} \\ j_{max} \end{pmatrix} - \begin{pmatrix} -1 & 0 \\ 0 & -1 \end{pmatrix} \begin{pmatrix} i_{min} \\ j_{max} + 1 \end{pmatrix} \\
&= \begin{pmatrix} i_{max} + i_{min} \\ 2j_{max} + 1 \end{pmatrix}. \qquad (12)
\end{aligned}
$$

Figure 27 visualizes the bipolar topology at the top edge of the tile. Note, however, that the coordinates are perfectly spherical. Consequently there is no "drawing shut" of the cut line as would be expected for a true bipolar geometry. Still, the two poles are becoming visible at the two opposing ends of the top circle, where the distance between the connection lines is starting to go to zero.

Figure 26: A single 50x20 index space tile with periodic connection along i, and pole at j_{max}. The hole at j_{min} is hidden from sight.

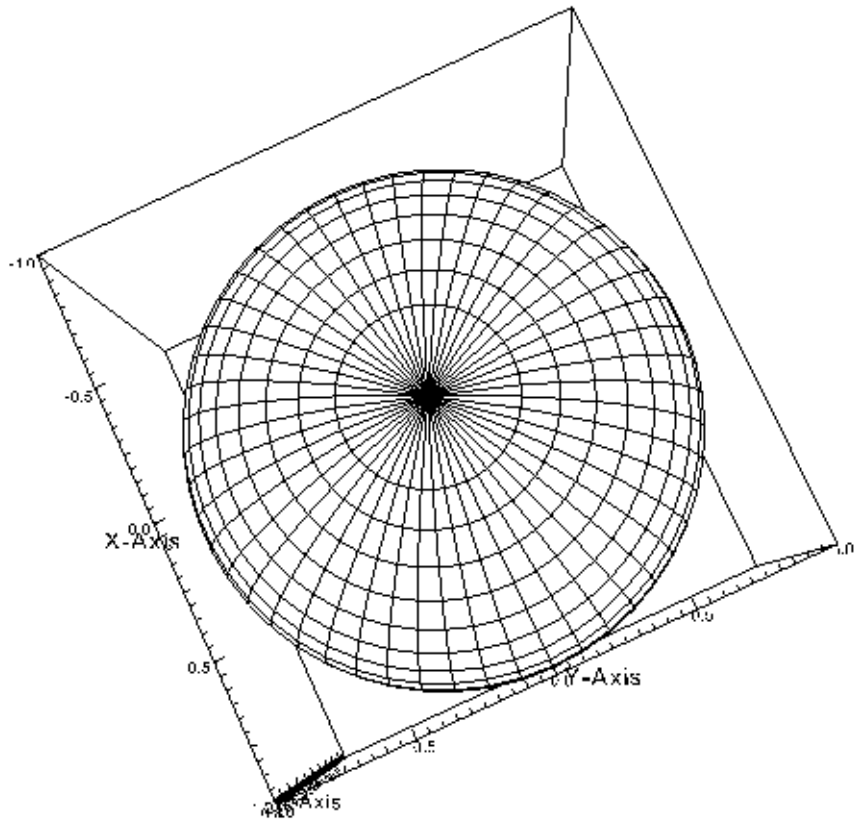


```
allocate(connectionList(3))
call ESMF_DistGridConnectionSet(connection=connectionList(1), & ! 1st connection
  tileIndexA=1, tileIndexB=1, &   ! periodic along i
  positionVector=(/-(maxIndex(1)-minIndex(1)+1),0/), &
  rc=rc)

call ESMF_DistGridConnectionSet(connection=connectionList(2), & ! 2nd connection
  tileIndexA=1, tileIndexB=1, &   ! pole at j_min
  orientationVector=(/1,-2/), &
  positionVector=(/ (maxIndex(1)-minIndex(1)+1)/2 , 2*minIndex(2)+1 /), &
  rc=rc)

call ESMF_DistGridConnectionSet(connection=connectionList(3), & ! 3rd connection
  tileIndexA=1, tileIndexB=1, &   ! bi-pole at j_max
  orientationVector=(/-1,-2/), &
  positionVector=(/ maxIndex(1)+minIndex(1) , 2*maxIndex(2)+1 /), &
  rc=rc)

distgrid = ESMF_DistGridCreate(minIndex=minIndex, maxIndex=maxIndex, &
  connectionList=connectionList, rc=rc)
```

Figure 27: A single 50x20 index space tile with periodic connection along i, and bi-pole at j_{max}. The regular pole connection at j_{min} is hidden from sight.

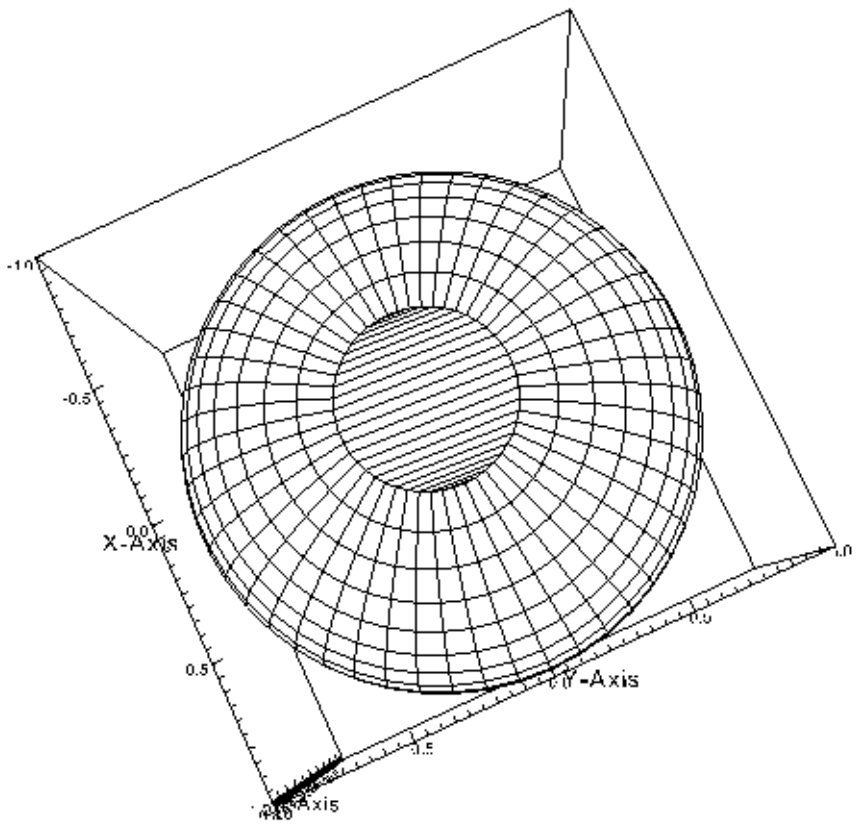

37.3.8 DistGrid Connections - Multi tile connections

Starting point of the multi-tile connection examples will be the six tile case shown in figure 28. All six tiles are identical squares of size 10x10.

One geometrical interpretation of the six tiles shown is that of an unfolded cube. In fact, the way that the tiles are arranged in the 2D plane does suggest the cubic interpretation. In order to turn the six tiles into a cubic topology, each tile must be connected to its neighbors on all four sides. In total there will be 12 connections that need to be made.

Choosing global indexing, the depicted six tile case can be created in the following way:

```
allocate(minIndexPTile(2,6))     ! (dimCount, tileCount)
allocate(maxIndexPTile(2,6))     ! (dimCount, tileCount)
size = 10                        ! number of index space points along tile sides
!- tile 1
tile=1
minIndexPTile(1,tile)=1
minIndexPTile(2,tile)=1
maxIndexPTile(1,tile)=minIndexPTile(1,tile)+size-1
maxIndexPTile(2,tile)=minIndexPTile(2,tile)+size-1
!- tile 2
tile=2
```

Figure 28: Six 10x10 square index space tiles without connections. The tile number is indicated by color as indicated by the legend.

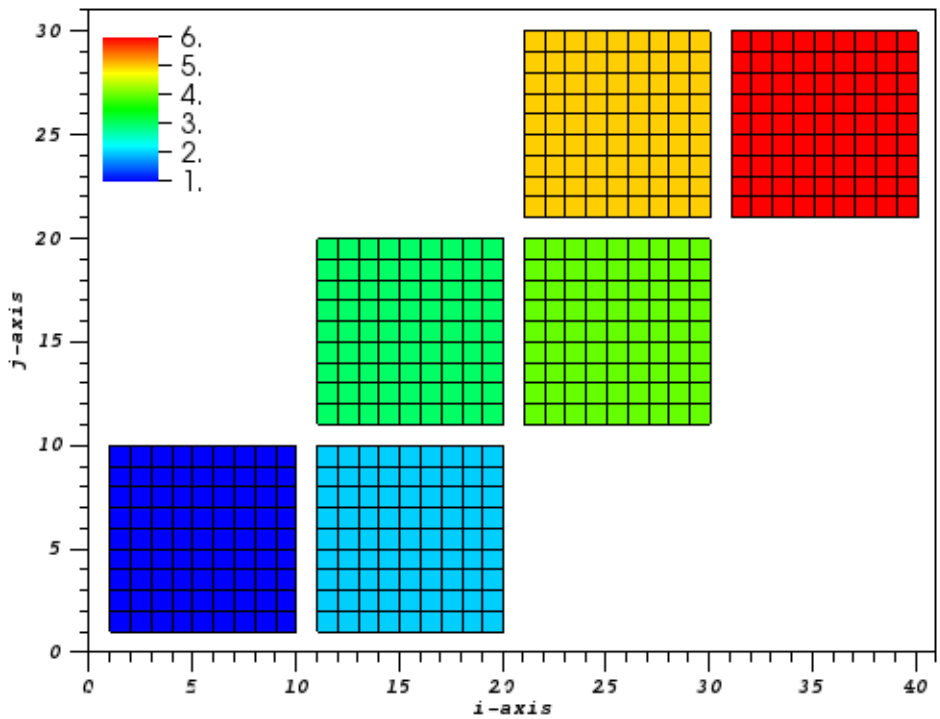


```
minIndexPTile(1,tile)=maxIndexPTile(1,tile-1)+1
minIndexPTile(2,tile)=minIndexPTile(2,tile-1)
maxIndexPTile(1,tile)=minIndexPTile(1,tile)+size-1
maxIndexPTile(2,tile)=minIndexPTile(2,tile)+size-1
!- tile 3
tile=3
minIndexPTile(1,tile)=minIndexPTile(1,tile-1)
minIndexPTile(2,tile)=maxIndexPTile(2,tile-1)+1
maxIndexPTile(1,tile)=minIndexPTile(1,tile)+size-1
maxIndexPTile(2,tile)=minIndexPTile(2,tile)+size-1
!- tile 4
tile=4
minIndexPTile(1,tile)=maxIndexPTile(1,tile-1)+1
minIndexPTile(2,tile)=minIndexPTile(2,tile-1)
maxIndexPTile(1,tile)=minIndexPTile(1,tile)+size-1
maxIndexPTile(2,tile)=minIndexPTile(2,tile)+size-1
!- tile 5
tile=5
minIndexPTile(1,tile)=minIndexPTile(1,tile-1)
minIndexPTile(2,tile)=maxIndexPTile(2,tile-1)+1
maxIndexPTile(1,tile)=minIndexPTile(1,tile)+size-1
maxIndexPTile(2,tile)=minIndexPTile(2,tile)+size-1
!- tile 6
tile=6
```

```
minIndexPTile(1,tile)=maxIndexPTile(1,tile-1)+1
minIndexPTile(2,tile)=minIndexPTile(2,tile-1)
maxIndexPTile(1,tile)=minIndexPTile(1,tile)+size-1
maxIndexPTile(2,tile)=minIndexPTile(2,tile)+size-1

distgrid = ESMF_DistGridCreate(minIndexPTile=minIndexPTile, &
  maxIndexPTile=maxIndexPTile, rc=rc)
```

The five connections between tiles 1&2, 2&3, 3&4, 4&5, 5&6 are trivial. There are no rotations, which means that the `orientationVector` argument can be ommitted in these connections. Further, because of the global index space, there are no translations either, which means that `positionVector`=(0,0) for these five connections. The resulting topology is shown in figure 29.

```
allocate(connectionList(5))
!- connection 1
conn=1
call ESMF_DistGridConnectionSet(connection=connectionList(conn), &
  tileIndexA=1, tileIndexB=2, positionVector=(/0, 0/), rc=rc)
!- connection 2
conn=2
call ESMF_DistGridConnectionSet(connection=connectionList(conn), &
  tileIndexA=2, tileIndexB=3, positionVector=(/0, 0/), rc=rc)
!- connection 3
conn=3
call ESMF_DistGridConnectionSet(connection=connectionList(conn), &
  tileIndexA=3, tileIndexB=4, positionVector=(/0, 0/), rc=rc)
!- connection 4
conn=4
call ESMF_DistGridConnectionSet(connection=connectionList(conn), &
  tileIndexA=4, tileIndexB=5, positionVector=(/0, 0/), rc=rc)
!- connection 5
conn=5
call ESMF_DistGridConnectionSet(connection=connectionList(conn), &
  tileIndexA=5, tileIndexB=6, positionVector=(/0, 0/), rc=rc)

distgrid = ESMF_DistGridCreate(minIndexPTile=minIndexPTile, &
  maxIndexPTile=maxIndexPTile, connectionList=connectionList, rc=rc)
```

The sixth connection that does not involve a rotation is that between tile 1&6. While there is no rotation involved, it does include a translation because the bottom edge of tile 1 must reach all the way to the top edge of tile 6. This involves a translation along both the i and the j dimension.

Using the same procedure introduced in the previous section, we chose an arbitrary index space point close to the connection and write it in terms of both tiles that we want to connect. E.g. the first point of the top edge of tile 6 is

```
( minIndexPTile(1,6) , maxIndexPTile(2,6) )
```

in terms of tile 6. However, in terms of tile 1, going through the connection, it is

```
( minIndexPTile(1,1) , minIndexPTile(2,1)-1 ).
```

According to the general transformation relationship (4) the position vector $\vec{P}$ for the forward transform tile 1 $\rightarrow$ tile 6 is then given as the difference between these two representations. Figure 30 visualizes the situation.

```
!- connection 6
conn=6
```

Figure 29: The six tiles of an unfolded cube with five connections defined.

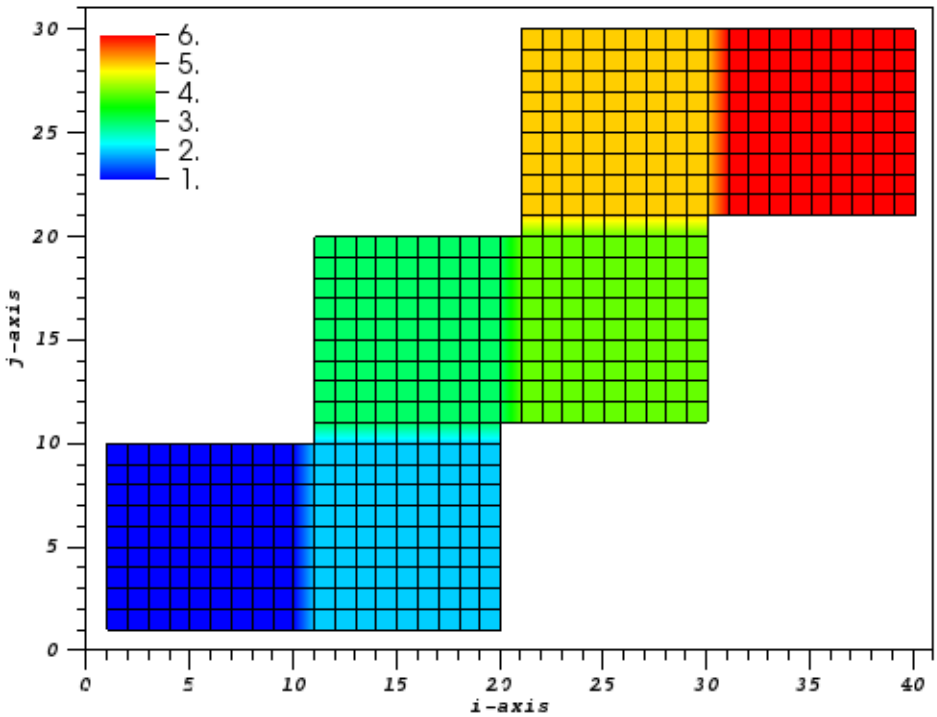


```
call ESMF_DistGridConnectionSet(connection=connectionList(conn), &
  tileIndexA=1, tileIndexB=6, &
  positionVector=(/minIndexPTile(1,6)-minIndexPTile(1,1),      &
                   maxIndexPTile(2,6)-minIndexPTile(2,1)+1/), &
  rc=rc)

distgrid = ESMF_DistGridCreate(minIndexPTile=minIndexPTile, &
  maxIndexPTile=maxIndexPTile, connectionList=connectionList, rc=rc)
```

The six remaining connections all involve rotations. The procedure for finding the correct `orientationVector` and `positionVector` arguments still remains the same: First determine the direction of the connection to be formulated. This is important because for the forward connection the rotation applies to tile "A". Once the correct rotation operation $\hat{R}$ is pinned down, an arbitrary point close to the connection is chosen. This point can either be on tile "A" or "B". It is written then written in terms of tile "A" index space $\vec{a}$, and in terms of tile "B" index space $\vec{b}$. Obviously one of those formulations (either $\vec{a}$ or $\vec{b}$) will take advantage of the connection, i.e. it will actually step outside the reference tile in order to reach the chosen point. Finally the position vector $\vec{P}$ of the connection is determined by expression (4) as the difference:

$$\vec{P} = \vec{b} - \hat{R}\vec{a}. \tag{13}$$

Following the above outlined procedure for connection tile 1 $\rightarrow$ tile 3, we find first that tile 1 needs to be rotated clockwise by $90°$. This rotation lines up the top edge of tile 1 with the left edge of tile 3. A clockwise rotation of $90°$ corresponds to a counterclockwise rotation by $270°$ given in table 3. We therefore know that `orientationVector`=(2,-

Figure 30: The six tiles of an unfolded cube with all six connections that do not involve any rotation of tiles.

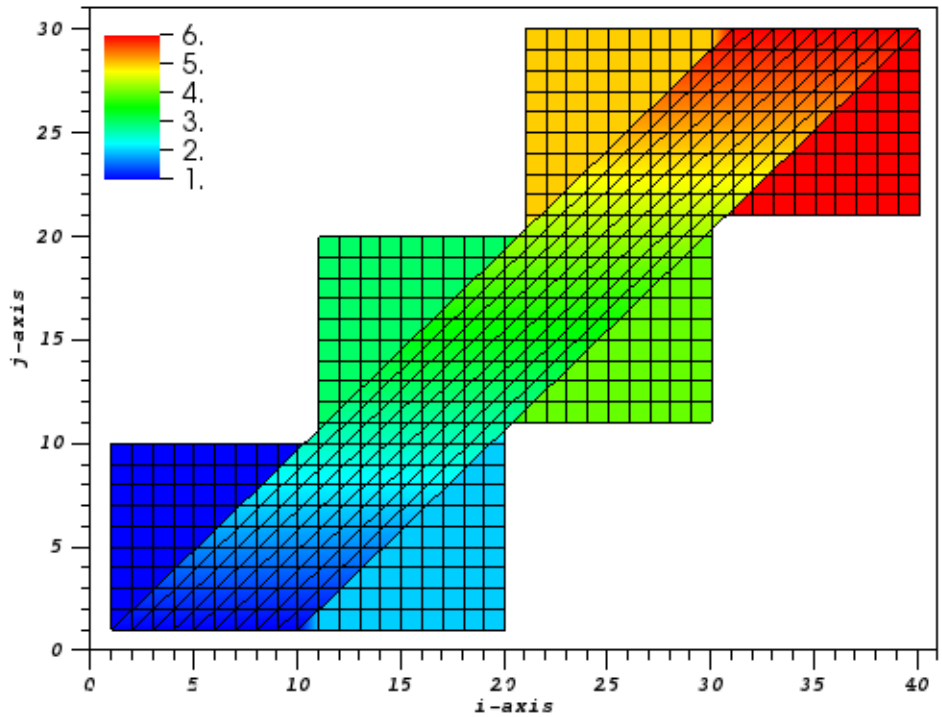

1) for this connection, and the associated operation is $\hat{R} = \begin{pmatrix} 0 & 1 \\ -1 & 0 \end{pmatrix}$.

Next we chose the first point on the top edge of tile 1 as a reference point. In terms of tile 1 this point has coordinates

$\vec{a}$ = `( minIndexPTile(1,1) , maxIndexPTile(2,1) ).`

The same point in terms of tile 3 (going through the connection) has coordinates

$\vec{b}$ = `( minIndexPTile(1,3)-1 , maxIndexPTile(2,3) ).`

Using equation (13) we find the position vector and can write down the connection:

```
allocate(connectionList(2))
!- connection 1
conn=1
call ESMF_DistGridConnectionSet(connection=connectionList(conn), &
  tileIndexA=1, tileIndexB=3, &
  orientationVector=(/2,-1/), & ! 270 degree rotation of tile A
  positionVector=(/minIndexPTile(1,3)-1-maxIndexPTile(2,1),   &
                   maxIndexPTile(2,3)+minIndexPTile(1,1)/), &
  rc=rc)
```

For greater clarity figure 31 only shows two connections. Besides the connection just defined between tile 1 and 3, the other connection shown is between tile 4 and 6. Defining the connection as forward going from tile 4 to tile 6 means that tile 4 needs to be rotated in such a way that its right edge meets up with the bottom edge of tile 6. This requires a counterclockwise rotation of tile 4 by 90°. From table 3 we then get `orientationVector`=(-2,1), and

$\hat{R} = \begin{pmatrix} 0 & -1 \\ 1 & 0 \end{pmatrix}$.

Choosing the left most point on the bottom edge of tile 6 as the reference point, we find the coordinates in terms of tile 4 (through the connection)

$\vec{a}$ = `( maxIndexPTile(1,4)+1 , maxIndexPTile(2,4) )`,

and in terms of tile 6

$\vec{b}$ = `( minIndexPTile(1,6) , minIndexPTile(2,6) )`.

Again using equation (13) we find the position vector and can implement the second connection:

```
!- connection 2
conn=2
call ESMF_DistGridConnectionSet(connection=connectionList(conn), &
  tileIndexA=4, tileIndexB=6, &
  orientationVector=(/-2,1/), & ! 90 degree rotation of tile A
  positionVector=(/minIndexPTile(1,6)+maxIndexPTile(2,4),    &
                   minIndexPTile(2,6)-maxIndexPTile(1,4)-1/), &
  rc=rc)

distgrid = ESMF_DistGridCreate(minIndexPTile=minIndexPTile, &
  maxIndexPTile=maxIndexPTile, connectionList=connectionList, rc=rc)
```

Figure 31: The six tiles of an unfolded cube with two connections that involve rotation of tiles.

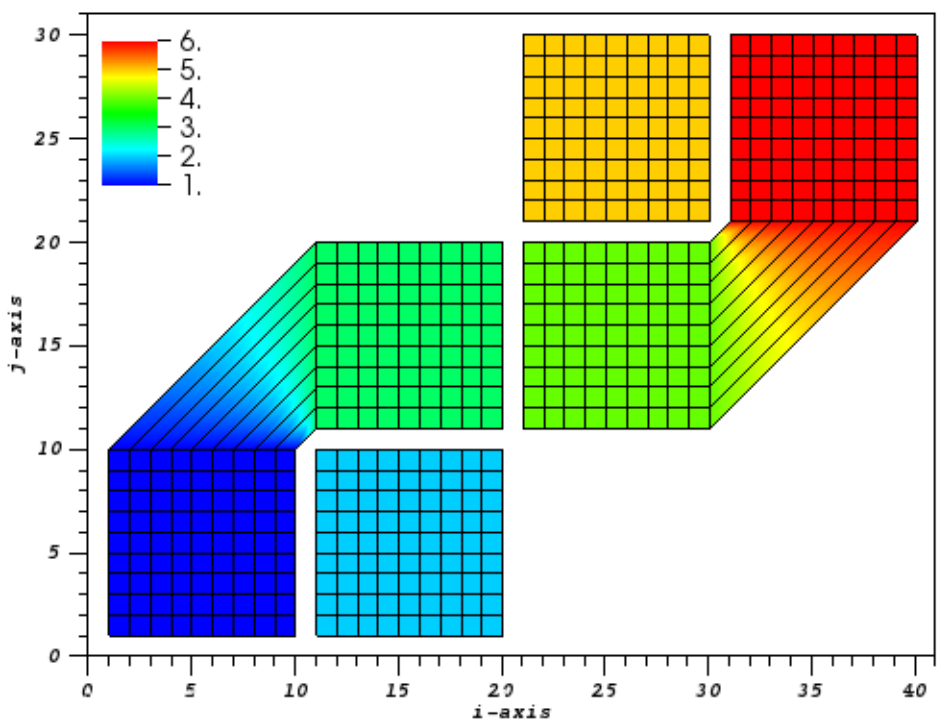

The remaining four connections with rotations can be determined following the exact same recipe. The following code finally defines all 12 connections needed to connect the six index space tiles into a cubic topology.

```
allocate(connectionList(12))

!- connection 1: tile 1 -> tile 2
conn=1
call ESMF_DistGridConnectionSet(connection=connectionList(conn), &
  tileIndexA=1, tileIndexB=2, positionVector=(/0, 0/), rc=rc)

!- connection 2: tile 2 -> tile 3
conn=2
call ESMF_DistGridConnectionSet(connection=connectionList(conn), &
  tileIndexA=2, tileIndexB=3, positionVector=(/0, 0/), rc=rc)

!- connection 3: tile 3 -> tile 4
conn=3
call ESMF_DistGridConnectionSet(connection=connectionList(conn), &
  tileIndexA=3, tileIndexB=4, positionVector=(/0, 0/), rc=rc)

!- connection 4: tile 4 -> tile 5
conn=4
call ESMF_DistGridConnectionSet(connection=connectionList(conn), &
  tileIndexA=4, tileIndexB=5, positionVector=(/0, 0/), rc=rc)

!- connection 5: tile 5 -> tile 6
conn=5
call ESMF_DistGridConnectionSet(connection=connectionList(conn), &
  tileIndexA=5, tileIndexB=6, positionVector=(/0, 0/), rc=rc)

!- connection 6: tile 1 -> tile 6
conn=6
call ESMF_DistGridConnectionSet(connection=connectionList(conn), &
  tileIndexA=1, tileIndexB=6, &
  positionVector=(/minIndexPTile(1,6)-minIndexPTile(1,1),     &
                   maxIndexPTile(2,6)-minIndexPTile(2,1)+1/), &
  rc=rc)

!- connection 7: tile 1 -> tile 3
conn=7
call ESMF_DistGridConnectionSet(connection=connectionList(conn), &
  tileIndexA=1, tileIndexB=3, &
  orientationVector=(/2,-1/), & ! 270 degree rotation of tile A
  positionVector=(/minIndexPTile(1,3)-1-maxIndexPTile(2,1), &
                   maxIndexPTile(2,3)+minIndexPTile(1,1)/), &
  rc=rc)

!- connection 8: tile 3 -> tile 5
conn=8
call ESMF_DistGridConnectionSet(connection=connectionList(conn), &
  tileIndexA=3, tileIndexB=5, &
  orientationVector=(/2,-1/), & ! 270 degree rotation of tile A
  positionVector=(/minIndexPTile(1,5)-1-maxIndexPTile(2,3), &
                   maxIndexPTile(2,5)+minIndexPTile(1,3)/), &
  rc=rc)

!- connection 9: tile 5 -> tile 1
conn=9
```

```
call ESMF_DistGridConnectionSet(connection=connectionList(conn), &
  tileIndexA=5, tileIndexB=1, &
  orientationVector=(/2,-1/), & ! 270 degree rotation of tile A
  positionVector=(/minIndexPTile(1,1)-1-maxIndexPTile(2,5), &
                   maxIndexPTile(2,1)+minIndexPTile(1,5)/), &
  rc=rc)

!- connection 10: tile 2 -> tile 4
conn=10
call ESMF_DistGridConnectionSet(connection=connectionList(conn), &
  tileIndexA=2, tileIndexB=4, &
  orientationVector=(/-2,1/), & ! 90 degree rotation of tile A
  positionVector=(/minIndexPTile(1,4)+maxIndexPTile(2,2),     &
                   minIndexPTile(2,4)-maxIndexPTile(1,2)-1/), &
  rc=rc)

!- connection 11: tile 4 -> tile 6
conn=11
call ESMF_DistGridConnectionSet(connection=connectionList(conn), &
  tileIndexA=4, tileIndexB=6, &
  orientationVector=(/-2,1/), & ! 90 degree rotation of tile A
  positionVector=(/minIndexPTile(1,6)+maxIndexPTile(2,4),     &
                   minIndexPTile(2,6)-maxIndexPTile(1,4)-1/), &
  rc=rc)

!- connection 12: tile 6 -> tile 2
conn=12
call ESMF_DistGridConnectionSet(connection=connectionList(conn), &
  tileIndexA=6, tileIndexB=2, &
  orientationVector=(/-2,1/), & ! 90 degree rotation of tile A
  positionVector=(/minIndexPTile(1,2)+maxIndexPTile(2,6),     &
                   minIndexPTile(2,2)-maxIndexPTile(1,6)-1/), &
  rc=rc)

! - create the DistGrid with 6 tiles and 12 connections
distgrid = ESMF_DistGridCreate(minIndexPTile=minIndexPTile, &
  maxIndexPTile=maxIndexPTile, connectionList=connectionList, rc=rc)
```

For better visualization the resulting cubic topology is plotted in 3D. Each index space point is associated with a longitude and latitude value of the unit sphere. Combined with the cubic topology formed by the six index space tiles, this results in a cubed sphere representation shown in figure 32.

37.4 Restrictions and Future Work

- Multi-tile DistGrids from deBlockList are not yet supported.
- The fastAxis feature has not been implemented yet.

37.5 Design and Implementation Notes

This section will be updated as the implementation of the DistGrid class nears completion.

Figure 32: Six index space tiles with all 12 connections to form a cubic topology. The coordinates at every index space point are chosen to form a spherical geometry, resulting in a cubed sphere.

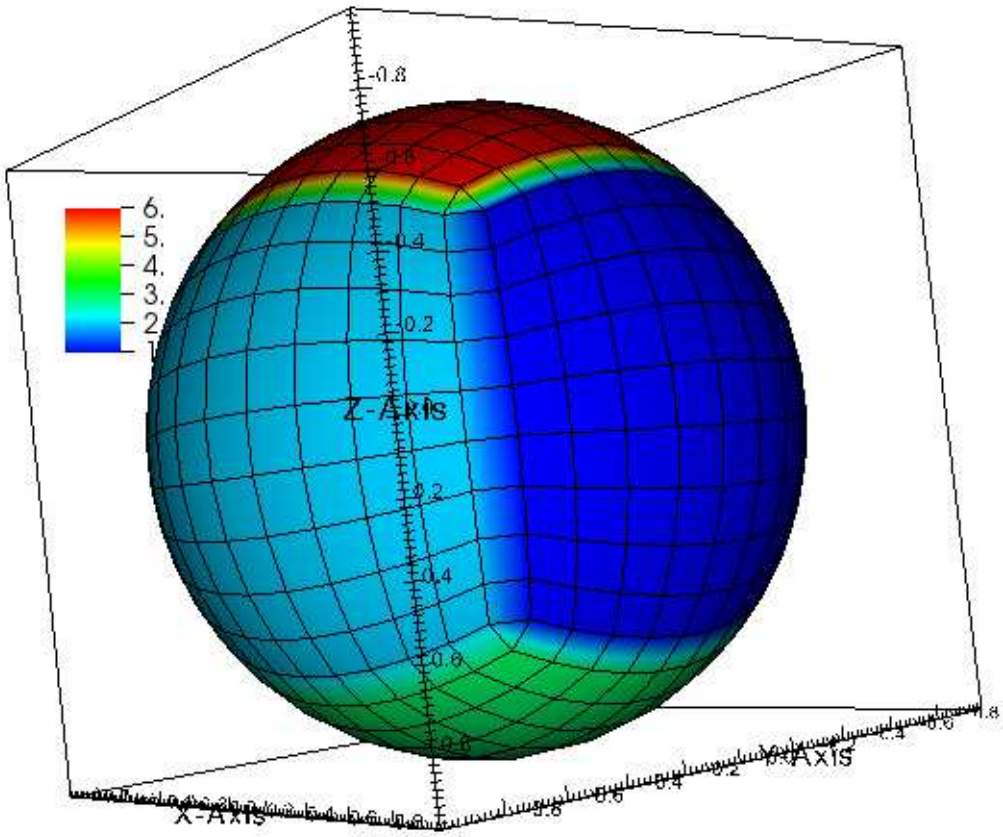

37.6 Class API

37.6.1 ESMF_DistGridAssignment(=) - DistGrid assignment

INTERFACE:

```
interface assignment(=)
distgrid1 = distgrid2
```

ARGUMENTS:

```
type(ESMF_DistGrid) :: distgrid1
type(ESMF_DistGrid) :: distgrid2
```

STATUS:

- This interface is backward compatible with ESMF versions starting at 5.2.0r. If code using this interface compiles with any version of ESMF starting with 5.2.0r, then it will compile with the current version.

DESCRIPTION:

Assign distgrid1 as an alias to the same ESMF DistGrid object in memory as distgrid2. If distgrid2 is invalid, then distgrid1 will be equally invalid after the assignment.

The arguments are:

distgrid1 The `ESMF_DistGrid` object on the left hand side of the assignment.

distgrid2 The `ESMF_DistGrid` object on the right hand side of the assignment.

37.6.2 ESMF_DistGridOperator(==) - DistGrid equality operator

INTERFACE:

```
interface operator(==)
  if (distgrid1 == distgrid2) then ... endif
            OR
  result = (distgrid1 == distgrid2)
```

RETURN VALUE:

```
logical :: result
```

ARGUMENTS:

```
type(ESMF_DistGrid), intent(in) :: distgrid1
type(ESMF_DistGrid), intent(in) :: distgrid2
```

STATUS:

- This interface is backward compatible with ESMF versions starting at 5.2.0r. If code using this interface compiles with any version of ESMF starting with 5.2.0r, then it will compile with the current version.

DESCRIPTION:

Test whether distgrid1 and distgrid2 are valid aliases to the same ESMF DistGrid object in memory. For a more general comparison of two ESMF DistGrids, going beyond the simple alias test, the `ESMF_DistGridMatch()` function (not yet fully implemented) must be used.

The arguments are:

distgrid1 The `ESMF_DistGrid` object on the left hand side of the equality operation.

distgrid2 The `ESMF_DistGrid` object on the right hand side of the equality operation.

37.6.3 ESMF_DistGridOperator(/=) - DistGrid not equal operator

INTERFACE:

```
interface operator(/=)
  if (distgrid1 /= distgrid2) then ... endif
            OR
  result = (distgrid1 /= distgrid2)
```

RETURN VALUE:

```
logical :: result
```

ARGUMENTS:

```
type(ESMF_DistGrid), intent(in) :: distgrid1
type(ESMF_DistGrid), intent(in) :: distgrid2
```

STATUS:

- This interface is backward compatible with ESMF versions starting at 5.2.0r. If code using this interface compiles with any version of ESMF starting with 5.2.0r, then it will compile with the current version.

DESCRIPTION:

Test whether distgrid1 and distgrid2 are *not* valid aliases to the same ESMF DistGrid object in memory. For a more general comparison of two ESMF DistGrids, going beyond the simple alias test, the `ESMF_DistGridMatch()` function (not yet fully implemented) must be used.

The arguments are:

distgrid1 The `ESMF_DistGrid` object on the left hand side of the non-equality operation.

distgrid2 The `ESMF_DistGrid` object on the right hand side of the non-equality operation.

37.6.4 ESMF_DistGridCreate - Create DistGrid object from DistGrid

INTERFACE:

```
! Private name; call using ESMF_DistGridCreate()
function ESMF_DistGridCreateDG(distgrid, &
  firstExtra, lastExtra, indexflag, connectionList, balanceflag, &
  delayout, vm, rc)
```

RETURN VALUE:

```
type(ESMF_DistGrid) :: ESMF_DistGridCreateDG
```

ARGUMENTS:

```
     type(ESMF_DistGrid),           intent(in)            :: distgrid
 -- The following arguments require argument keyword syntax (e.g. rc=rc). --
     integer, target,               intent(in),  optional :: firstExtra(:)
     integer, target,               intent(in),  optional :: lastExtra(:)
     type(ESMF_Index_Flag),         intent(in),  optional :: indexflag
     type(ESMF_DistGridConnection), intent(in),  optional :: connectionList(:)
     logical,                       intent(in),  optional :: balanceflag
     type(ESMF_DELayout),           intent(in),  optional :: delayout
     type(ESMF_VM),                 intent(in),  optional :: vm
     integer,                       intent(out), optional :: rc
```

STATUS:

- This interface is backward compatible with ESMF versions starting at 5.2.0r. If code using this interface compiles with any version of ESMF starting with 5.2.0r, then it will compile with the current version.
- This interface was modified since ESMF version 5.2.0r. The fact that code using this interface compiles with the current ESMF version does not guarantee that it compiles with previous versions of this interface. If user code compatibility with version 5.2.0r is desired then care must be taken to limit the use of this interface to features that were available in the 5.2.0r release.
  Changes made after the 5.2.0r release:

  6.3.0r Added argument `vm` to support object creation on a different VM than that of the current context.

  8.0.0 Added argument `delayout` to support changing the layout of DEs across PETs.
  Added argument `balanceflag` to support rebalancing of the incoming DistGrids decomposition.

DESCRIPTION:

Create a new DistGrid from an existing DistGrid, keeping the decomposition unchanged, unless `balanceflag=.true.` (see below). The `firstExtraPTile` and `lastExtraPTile` arguments allow extra elements to be added at the first/last edge DE in each dimension. The method also allows the `indexflag` to be set. Further, if the `connectionList` argument provided in it will be used to set connections in the newly created DistGrid, otherwise the connections of the incoming DistGrid will be used.

The `balanceflag` argument allows a change in the decomposition, and thus of the number of DEs. An attempt is made to decompose the index space into as many DEs as there are PETs in the VM for which the DistGrid is created. See the argument description for details.

Setting the `balanceflag` argument to `.true.` is currently incompatible with providing any of the other optional arguments.

The arguments are:

distgrid Incoming DistGrid object.

[firstExtra] Extra elements added to the first DE along each dimension. This increases the size of the index space compared to that of the incoming `distgrid`. The decomposition of the enlarged index space is constructed to align with the original index space provided by `distgrid`. The default is a zero vector.

[lastExtra] Extra elements added to the last DE along each dimension. This increases the size of the index space compared to that of the incoming `distgrid`. The decomposition of the enlarged index space is constructed to align with the original index space provided by `distgrid`. The default is a zero vector.

[indexflag] If present, override the indexflag setting of the incoming `distgrid`. See section 55.29 for a complete list of options. By default use the indexflag setting of `distgrid`.

[connectionList] If present, override the connections of the incoming `distgrid`. See section 37.7.2 for the associated Set() method. By default use the connections defined in `distgrid`.

[balanceflag] If set to `.true`, rebalance the incoming `distgrid` decompositon to exactly one DE per PET. The DEs along each dimension are chosen to provide the most balanced decomposition across all dimensions. The default is `.false.`, leaving the decomposition, and therefore the number of DEs unchanged. For this case, PETs might end up with no DE, one DE, or multiple DEs.

[delayout] If present, override the DELayout of the incoming `distgrid`. By default use the DELayout defined in `distgrid`.

[vm] If present, the DistGrid object and the DELayout object are created on the specified `ESMF_VM` object. The default is to use the VM of the current context.

[rc] Return code; equals `ESMF_SUCCESS` if there are no errors.

37.6.5 ESMF_DistGridCreate - Create DistGrid object from DistGrid (multi-tile version)

INTERFACE:

```
! Private name; call using ESMF_DistGridCreate()
function ESMF_DistGridCreateDGT(distgrid, firstExtraPTile, &
  lastExtraPTile, indexflag, connectionList, balanceflag, &
  delayout, vm, rc)
```

RETURN VALUE:

```
type(ESMF_DistGrid) :: ESMF_DistGridCreateDGT
```

ARGUMENTS:

```
     type(ESMF_DistGrid),           intent(in)            :: distgrid
     integer, target,               intent(in)            :: firstExtraPTile(:,:)
     integer, target,               intent(in)            :: lastExtraPTile(:,:)
 -- The following arguments require argument keyword syntax (e.g. rc=rc). --
     type(ESMF_Index_Flag),         intent(in),  optional :: indexflag
     type(ESMF_DistGridConnection), intent(in),  optional :: connectionList(:)
     logical,                       intent(in),  optional :: balanceflag
     type(ESMF_DELayout),           intent(in),  optional :: delayout
     type(ESMF_VM),                 intent(in),  optional :: vm
     integer,                       intent(out), optional :: rc
```

STATUS:

- This interface is backward compatible with ESMF versions starting at 5.2.0r. If code using this interface compiles with any version of ESMF starting with 5.2.0r, then it will compile with the current version.

- This interface was modified since ESMF version 5.2.0r. The fact that code using this interface compiles with the current ESMF version does not guarantee that it compiles with previous versions of this interface. If user code compatibility with version 5.2.0r is desired then care must be taken to limit the use of this interface to features that were available in the 5.2.0r release.
  Changes made after the 5.2.0r release:

  6.3.0r Added argument `vm` to support object creation on a different VM than that of the current context.

  8.0.0 Added argument `delayout` to support changing the layout of DEs across PETs.
  Added argument `balanceflag` to support rebalancing of the incoming DistGrids decomposition.

DESCRIPTION:

Create a new DistGrid from an existing DistGrid, keeping the decomposition unchanged, unless `balanceflag=.true.` (see below). The `firstExtraPTile` and `lastExtraPTile` arguments allow extra elements to be added at the first/last edge DE in each dimension. The method also allows the `indexflag` to be set. Further, if the `connectionList` argument provided in it will be used to set connections in the newly created DistGrid, otherwise the connections of the incoming DistGrid will be used.

The `balanceflag` argument allows a change in the decomposition, and thus of the number of DEs. An attempt is made to decompose the index space into as many DEs as there are PETs in the VM for which the DistGrid is created. See the argument description for details.

Setting the `balanceflag` argument to `.true.` is currently incompatible with providing any of the other optional arguments.

The arguments are:

distgrid Incoming DistGrid object.

firstExtraPTile Extra elements added to the first DE along each dimension for each tile. This increases the size of the index space compared to that of the incoming `distgrid`. The decomposition of the enlarged index space is constructed to align with the original index space provided by `distgrid`. The default is a zero vector.

lastExtraPTile Extra elements added to the last DE along each dimension for each tile. This increases the size of the index space compared to that of the incoming `distgrid`. The decomposition of the enlarged index space is constructed to align with the original index space provided by `distgrid`. The default is a zero vector.

[indexflag] If present, override the indexflag setting of the incoming `distgrid`. See section 55.29 for a complete list of options. By default use the indexflag setting of `distgrid`.

[connectionList] If present, override the connections of the incoming `distgrid`. See section 37.7.2 for the associated Set() method. By default use the connections defined in `distgrid`.

[balanceflag] If set to `.true`, rebalance the incoming `distgrid` decompositon. An attempt is made to come out at exactly one DE per PET. However, if there are more tiles than PETs, the lower PETs will hold more than one DE. For cases where there are more PETs than tiles, each tile is decomposed into DEs as to provide the most balanced decomposition across all dimensions. The default is `.false.`, leaving the decomposition, and therefore the number of DEs unchanged. For this case, PETs might end up with no DE, one DE, or multiple DEs.

[delayout] If present, override the DELayout of the incoming `distgrid`. By default use the DELayout defined in `distgrid`.

[vm] If present, the DistGrid object and the DELayout object are created on the specified `ESMF_VM` object. The default is to use the VM of the current context.

[rc] Return code; equals `ESMF_SUCCESS` if there are no errors.

37.6.6 ESMF_DistGridCreate - Create DistGrid object with regular decomposition

INTERFACE:

```
! Private name; call using ESMF_DistGridCreate()
function ESMF_DistGridCreateRD(minIndex, maxIndex, regDecomp, &
  decompflag, regDecompFirstExtra, regDecompLastExtra, deLabelList, &
  indexflag, connectionList, delayout, vm, indexTK, rc)
```

RETURN VALUE:

```
type(ESMF_DistGrid) :: ESMF_DistGridCreateRD
```

ARGUMENTS:

```
     integer,                        intent(in)            :: minIndex(:)
     integer,                        intent(in)            :: maxIndex(:)
 -- The following arguments require argument keyword syntax (e.g. rc=rc). --
     integer,                target, intent(in),  optional :: regDecomp(:)
     type(ESMF_Decomp_Flag), target, intent(in),  optional :: decompflag(:)
     integer,                target, intent(in),  optional :: regDecompFirstExtra(:)
     integer,                target, intent(in),  optional :: regDecompLastExtra(:)
     integer,                target, intent(in),  optional :: deLabelList(:)
     type(ESMF_Index_Flag),          intent(in),  optional :: indexflag
     type(ESMF_DistGridConnection),  intent(in),  optional :: connectionList(:)
     type(ESMF_DELayout),            intent(in),  optional :: delayout
     type(ESMF_VM),                  intent(in),  optional :: vm
     type(ESMF_TypeKind_Flag),       intent(in),  optional :: indexTK
     integer,                        intent(out), optional :: rc
```

STATUS:

- This interface is backward compatible with ESMF versions starting at 5.2.0r. If code using this interface compiles with any version of ESMF starting with 5.2.0r, then it will compile with the current version.
- This interface was modified since ESMF version 5.2.0r. The fact that code using this interface compiles with the current ESMF version does not guarantee that it compiles with previous versions of this interface. If user code compatibility with version 5.2.0r is desired then care must be taken to limit the use of this interface to features that were available in the 5.2.0r release.
  Changes made after the 5.2.0r release:

  8.1.0 Added argument `indexTK` to support explicit selection between 32-bit and 64-bit sequence indices.

DESCRIPTION:

Create an `ESMF_DistGrid` from a single logically rectangular tile. The tile has a regular decomposition, where the tile is decomposed into a fixed number of DEs along each dimension. A regular decomposition of a single tile is expressed by a single `regDecomp` list of DE counts in each dimension.

The arguments are:

minIndex Index space tuple of the lower corner of the single tile.

maxIndex Index space tuple of the upper corner of the single tile.

[regDecomp] List of DE counts for each dimension. The total `deCount` is determined as the product of `regDecomp` elements. By default `regDecomp` = (/`deCount`,1,...,1/), where `deCount` is the number of DEs in the `delayout`. If the default `delayout` is used, the `deCount` is equal to `petCount`. This leads to a simple 1 DE per PET distribution, where the decompsition is only along the first dimension.

[decompflag] List of decomposition flags indicating how each dimension of the tile is to be divided between the DEs. The default setting is `ESMF_DECOMP_BALANCED` in all dimensions. See section 55.14 for a list of valid decomposition options.

[regDecompFirstExtra] Specify how many extra elements on the first DEs along each dimension to consider when applying the regular decomposition algorithm. This does *not* add extra elements to the index space defined by `minIndex` and `maxIndex`. Instead `regDecompFirstExtra` is used to correctly interpret the specified index space: The `regDecomp` is first applied to the index space *without* the extra elements. The extra elements are then added back in to arrive at the final decomposition. This is useful when aligning the decomposition of index spaces that only differ in extra elements along the edges, e.g. when dealing with different stagger locations. The default is a zero vector, assuming no extra elements.

[regDecompLastExtra] Specify how many extra elements on the last DEs along each dimension to consider when applying the regular decomposition algorithm. This does *not* add extra elements to the index space defined by `minIndex` and `maxIndex`. Instead `regDecompLastExtra` is used to correctly interpret the specified index space: The `regDecomp` is first applied to the index space *without* the extra elements. The extra elements are then added back in to arrive at the final decomposition. This is useful when aligning the decomposition of index spaces that only differ in extra elements along the edges, e.g. when dealing with different stagger locations. The default is a zero vector, assuming no extra elements.

[deLabelList] List assigning DE labels to the default sequence of DEs. The default sequence is given by the column major order of the `regDecomp` argument.

[indexflag] Indicates whether the indices provided by the `minIndex` and `maxIndex` arguments are forming a global index space or not. This does *not* affect the indices held by the DistGrid object, which are always identical to what was specified by `minIndex` and `maxIndex`, regardless of the `indexflag` setting. However, it does affect whether an `ESMF_Array` object created on the DistGrid can choose global indexing or not. The default is `ESMF_INDEX_DELOCAL`. See section 55.29 for a complete list of options.

[connectionList] List of `ESMF_DistGridConnection` objects, defining connections between DistGrid tiles in index space. See section 37.7.2 for the associated Set() method.

[delayout] `ESMF_DELayout` object to be used. If a DELayout object is specified its `deCount` must match the number indicated by `regDecomp`. By default a new DELayout object will be created with the correct number of DEs.

[vm] If present, the DistGrid object (and the DELayout object if not provided) are created on the specified `ESMF_VM` object. The default is to use the VM of the current context.

[indexTK] Typekind used for global sequence indexing. See section 55.61 for a list of typekind options. Only integer types are supported. The default is to have ESMF automatically choose between `ESMF_TYPEKIND_I4` and `ESMF_TYPEKIND_I8`, depending on whether the global number of elements held by the DistGrid is below or above the 32-bit limit, respectively. Because of the use of signed integers for sequence indices, element counts of $> 2^{31} - 1 = 2,147,483,647$ will switch to 64-bit indexing.

[rc] Return code; equals `ESMF_SUCCESS` if there are no errors.

37.6.7 ESMF_DistGridCreate - Create DistGrid object with regular decomposition (multi-tile version)

INTERFACE:

```
! Private name; call using ESMF_DistGridCreate()
function ESMF_DistGridCreateRDT(minIndexPTile, maxIndexPTile, &
  regDecompPTile, decompflagPTile, regDecompFirstExtraPTile,&
  regDecompLastExtraPTile, deLabelList, indexflag, connectionList, &
  delayout, vm, indexTK, rc)
```

RETURN VALUE:

```
type(ESMF_DistGrid) :: ESMF_DistGridCreateRDT
```

ARGUMENTS:

```
     integer,                        intent(in)            :: minIndexPTile(:,:)
     integer,                        intent(in)            :: maxIndexPTile(:,:)
 -- The following arguments require argument keyword syntax (e.g. rc=rc). --
     integer,                        intent(in),  optional :: regDecompPTile(:,:)
     type(ESMF_Decomp_Flag), target, intent(in),  optional :: decompflagPTile(:,:)
     integer,                target, intent(in),  optional :: regDecompFirstExtraPTile(:,:
     integer,                target, intent(in),  optional :: regDecompLastExtraPTile(:,:)
     integer,                        intent(in),  optional :: deLabelList(:)
     type(ESMF_Index_Flag),          intent(in),  optional :: indexflag
     type(ESMF_DistGridConnection),  intent(in),  optional :: connectionList(:)
     type(ESMF_DELayout),            intent(in),  optional :: delayout
     type(ESMF_VM),                  intent(in),  optional :: vm
     type(ESMF_TypeKind_Flag),       intent(in),  optional :: indexTK
     integer,                        intent(out), optional :: rc
```

STATUS:

- This interface is backward compatible with ESMF versions starting at 5.2.0r. If code using this interface compiles with any version of ESMF starting with 5.2.0r, then it will compile with the current version.
- This interface was modified since ESMF version 5.2.0r. The fact that code using this interface compiles with the current ESMF version does not guarantee that it compiles with previous versions of this interface. If user code compatibility with version 5.2.0r is desired then care must be taken to limit the use of this interface to features that were available in the 5.2.0r release.
  Changes made after the 5.2.0r release:

  8.1.0 Added argument `indexTK` to support explicit selection between 32-bit and 64-bit sequence indices.

DESCRIPTION:

Create an `ESMF_DistGrid` from multiple logically rectangular tiles. Each tile has a regular decomposition, where the tile is decomposed into a fixed number of DEs along each dimension. A regular decomposition of a multi-tile DistGrid is expressed by a list of DE count vectors, one vector for each tile. If a DELayout is specified, it must contain at least as many DEs as there are tiles.

The arguments are:

minIndexPTile The first index provides the index space tuple of the lower corner of a tile. The second index indicates the tile number.

maxIndexPTile The first index provides the index space tuple of the upper corner of a tile. The second index indicates the tile number.

[regDecompPTile] List of DE counts for each dimension. The second index steps through the tiles. The total `deCount` is determined as ths sum over the products of `regDecomp` elements for each tile. By default each tile is decomposed only along the first dimension. The default number of DEs per tile is at least 1, but may be greater for the leading tiles if the `deCount` is greater than the `tileCount`. If no DELayout is specified, the `deCount` is by default set equal to the number of PETs (`petCount`), or the number of tiles (`tileCount`), which ever is greater. This means that as long as `petCount` > `tileCount`, the resulting default distribution will be 1 DE per PET. Notice that some tiles may be decomposed into more DEs than other tiles.

[decompflagPTile] List of decomposition flags indicating how each dimension of each tile is to be divided between the DEs. The default setting is `ESMF_DECOMP_BALANCED` in all dimensions for all tiles. See section 55.14 for a list of valid decomposition flag options. The second index indicates the tile number.

[regDecompFirstExtraPTile] Specify how many extra elements on the first DEs along each dimension to consider when applying the regular decomposition algorithm. This does *not* add extra elements to the index space defined by `minIndex` and `maxIndex`. Instead `regDecompFirstExtraPTile` is used to correctly interpret the specified index space: The `regDecomp` is first applied to the index space *without* the extra elements. The extra elements are then added back in to arrive at the final decomposition. This is useful when aligning the decomposition of index spaces that only differ in extra elements along the edges, e.g. when dealing with different stagger locations. The default is a zero vector, assuming no extra elements.

[regDecompLastExtraPTile] Specify how many extra elements on the last DEs along each dimension to consider when applying the regular decomposition algorithm. This does *not* add extra elements to the index space defined by `minIndex` and `maxIndex`. Instead `regDecompLastExtraPTile` is used to correctly interpret the specified index space: The `regDecomp` is first applied to the index space *without* the extra elements. The extra elements are then added back in to arrive at the final decomposition. This is useful when aligning the decomposition of index spaces that only differ in extra elements along the edges, e.g. when dealing with different stagger locations. The default is a zero vector, assuming no extra elements.

[deLabelList] List assigning DE labels to the default sequence of DEs. The default sequence is given by the column major order of the `regDecompPTile` elements in the sequence as they appear following the tile index.

[indexflag] Indicates whether the indices provided by the `minIndexPTile` and `maxIndexPTile` arguments are forming a global index space or not. This does *not* affect the indices held by the DistGrid object, which are always identical to what was specified by `minIndexPTile` and `maxIndexPTile`, regardless of the `indexflag` setting. However, it does affect whether an `ESMF_Array` object created on the DistGrid can choose global indexing or not. The default is `ESMF_INDEX_DELOCAL`. See section 55.29 for a complete list of options.

[connectionList] List of `ESMF_DistGridConnection` objects, defining connections between DistGrid tiles in index space. See section 37.7.2 for the associated Set() method.

[delayout] Optional `ESMF_DELayout` object to be used. By default a new DELayout object will be created with as many DEs as there are PETs, or tiles, which ever is greater. If a DELayout object is specified, the number of DEs must match `regDecompPTile`, if present. In the case that `regDecompPTile` was not specified, the `deCount` must be at least that of the default DELayout. The `regDecompPTile` will be constructed accordingly.

[vm] Optional `ESMF_VM` object of the current context. Providing the VM of the current context will lower the method's overhead.

[indexTK] Typekind used for global sequence indexing. See section 55.61 for a list of typekind options. Only integer types are supported. The default is to have ESMF automatically choose between `ESMF_TYPEKIND_I4` and `ESMF_TYPEKIND_I8`, depending on whether the global number of elements held by the DistGrid is below or

above the 32-bit limit, respectively. Because of the use of signed integers for sequence indices, element counts of $> 2^{31} - 1 = 2,147,483,647$ will switch to 64-bit indexing.

[rc] Return code; equals `ESMF_SUCCESS` if there are no errors.

37.6.8 ESMF_DistGridCreate - Create DistGrid object with DE blocks

INTERFACE:

```
! Private name; call using ESMF_DistGridCreate()
function ESMF_DistGridCreateDB(minIndex, maxIndex, deBlockList, &
  deLabelList, indexflag, connectionList, delayout, vm, &
  indexTK, rc)
```

RETURN VALUE:

```
type(ESMF_DistGrid) :: ESMF_DistGridCreateDB
```

ARGUMENTS:

```
     integer,                       intent(in)            :: minIndex(:)
     integer,                       intent(in)            :: maxIndex(:)
     integer,                       intent(in)            :: deBlockList(:,:,:)
 -- The following arguments require argument keyword syntax (e.g. rc=rc). --
     integer,                       intent(in),  optional :: deLabelList(:)
     type(ESMF_Index_Flag),         intent(in),  optional :: indexflag
     type(ESMF_DistGridConnection), intent(in),  optional :: connectionList(:)
     type(ESMF_DELayout),           intent(in),  optional :: delayout
     type(ESMF_VM),                 intent(in),  optional :: vm
     type(ESMF_TypeKind_Flag),      intent(in),  optional :: indexTK
     integer,                       intent(out), optional :: rc
```

STATUS:

- This interface is backward compatible with ESMF versions starting at 5.2.0r. If code using this interface compiles with any version of ESMF starting with 5.2.0r, then it will compile with the current version.
- This interface was modified since ESMF version 5.2.0r. The fact that code using this interface compiles with the current ESMF version does not guarantee that it compiles with previous versions of this interface. If user code compatibility with version 5.2.0r is desired then care must be taken to limit the use of this interface to features that were available in the 5.2.0r release.
  Changes made after the 5.2.0r release:

  7.1.0r Added argument `indexTK` to support selecting between 32-bit and 64-bit sequence indices.

DESCRIPTION:

Create an `ESMF_DistGrid` from a single logically rectangular tile with decomposition specified by `deBlockList`.

The arguments are:

minIndex Index space tuple of the lower corner of the single tile.

maxIndex Index space tuple of the upper corner of the single tile.

deBlockList List of DE-local blocks. The third index of `deBlockList` steps through the deBlock elements (i.e. deCount), which are defined by the first two indices. The first index must be of size `dimCount` and the second index must be of size 2. Each element of `deBlockList` defined by the first two indices hold the following information.

```
 +---------------------------------------> 2nd index
 |    1                 2
 | 1  minIndex(1)    maxIndex(1)
 | 2  minIndex(2)    maxIndex(2)
 | .  minIndex(.)    maxIndex(.)
 | .
 v
1st index
```

It is required that there be no overlap between the DE blocks.

[deLabelList] List assigning DE labels to the default sequence of DEs. The default sequence is given by the order of DEs in the `deBlockList` argument.

[indexflag] Indicates whether the indices provided by the `minIndex` and `maxIndex` arguments are forming a global index space or not. This does *not* affect the indices held by the DistGrid object, which are always identical to what was specified by `minIndex` and `maxIndex`, regardless of the `indexflag` setting. However, it does affect whether an `ESMF_Array` object created on the DistGrid can choose global indexing or not. The default is `ESMF_INDEX_DELOCAL`. See section 55.29 for a complete list of options.

[connectionList] List of `ESMF_DistGridConnection` objects, defining connections between DistGrid tiles in index space. See section 37.7.2 for the associated Set() method.

[delayout] Optional `ESMF_DELayout` object to be used. By default a new DELayout object will be created with the correct number of DEs. If a DELayout object is specified its number of DEs must match the number indicated by `regDecomp`.

[vm] Optional `ESMF_VM` object of the current context. Providing the VM of the current context will lower the method's overhead.

[indexTK] Typekind used for global sequence indexing. See section 55.61 for a list of typekind options. Only integer types are supported. The default is to have ESMF automatically choose between `ESMF_TYPEKIND_I4` and `ESMF_TYPEKIND_I8`, depending on whether the global number of elements held by the DistGrid is below or above the 32-bit limit, respectively. Because of the use of signed integers for sequence indices, element counts of $> 2^{31} - 1 = 2,147,483,647$ will switch to 64-bit indexing.

[rc] Return code; equals `ESMF_SUCCESS` if there are no errors.

37.6.9 ESMF_DistGridCreate - Create DistGrid object with DE blocks (multi-tile version)

INTERFACE:

```
! Private name; call using ESMF_DistGridCreate()
function ESMF_DistGridCreateDBT(minIndexPTile, maxIndexPTile, deBlockList, &
  deToTileMap, deLabelList, indexflag, connectionList, &
  delayout, vm, indexTK, rc)
```

RETURN VALUE:

```
type(ESMF_DistGrid) :: ESMF_DistGridCreateDBT
```

ARGUMENTS:

```
     integer,                       intent(in)            :: minIndexPTile(:,:)
     integer,                       intent(in)            :: maxIndexPTile(:,:)
     integer,                       intent(in)            :: deBlockList(:,:,:)
     integer,                       intent(in)            :: deToTileMap(:)
 -- The following arguments require argument keyword syntax (e.g. rc=rc). --
     integer,                       intent(in),  optional :: deLabelList(:)
     type(ESMF_Index_Flag),         intent(in),  optional :: indexflag
     type(ESMF_DistGridConnection), intent(in),  optional :: connectionList(:)
     type(ESMF_DELayout),           intent(in),  optional :: delayout
     type(ESMF_VM),                 intent(in),  optional :: vm
     type(ESMF_TypeKind_Flag),      intent(in),  optional :: indexTK
     integer,                       intent(out), optional :: rc
```

DESCRIPTION:

Create an `ESMF_DistGrid` on multiple logically rectangular tiles with decomposition specified by `deBlockList`.

The arguments are:

minIndexPTile The first index provides the index space tuple of the lower corner of a tile. The second index indicates the tile number.

maxIndexPTile The first index provides the index space tuple of the upper corner of a tile. The second index indicates the tile number.

deBlockList List of DE-local blocks. The third index of `deBlockList` steps through the deBlock elements (i.e. deCount), which are defined by the first two indices. The first index must be of size `dimCount` and the second index must be of size 2. Each element of `deBlockList` defined by the first two indices hold the following information.

```
+---------------------------------------> 2nd index
|    1                2
| 1  minIndex(1)    maxIndex(1)
| 2  minIndex(2)    maxIndex(2)
| .  minIndex(.)    maxIndex(.)
| .
v
1st index
```

It is required that there be no overlap between the DE blocks.

deToTileMap List assigning each DE to a specific tile. The size of `deToTileMap` must be equal to `deCount`. The order of DEs is the same as in `deBlockList`.

[deLabelList] List assigning DE labels to the default sequence of DEs. The default sequence is given by the order of DEs in the `deBlockList` argument.

[indexflag] Indicates whether the indices provided by the `minIndexPTile` and `maxIndexPTile` arguments are forming a global index space or not. This does *not* affect the indices held by the DistGrid object, which are always identical to what was specified by `minIndexPTile` and `maxIndexPTile`, regardless of the `indexflag` setting. However, it does affect whether an `ESMF_Array` object created on the DistGrid can choose global indexing or not. The default is `ESMF_INDEX_DELOCAL`. See section 55.29 for a complete list of options.

[connectionList] List of `ESMF_DistGridConnection` objects, defining connections between DistGrid tiles in index space. See section 37.7.2 for the associated Set() method.

[delayout] Optional `ESMF_DELayout` object to be used. By default a new DELayout object will be created with the correct number of DEs. If a DELayout object is specified its number of DEs must match the number indicated by `regDecomp`.

[vm] Optional `ESMF_VM` object of the current context. Providing the VM of the current context will lower the method's overhead.

[indexTK] Typekind used for global sequence indexing. See section 55.61 for a list of typekind options. Only integer types are supported. The default is to have ESMF automatically choose between `ESMF_TYPEKIND_I4` and `ESMF_TYPEKIND_I8`, depending on whether the global number of elements held by the DistGrid is below or above the 32-bit limit, respectively. Because of the use of signed integers for sequence indices, element counts of $> 2^{31} - 1 = 2,147,483,647$ will switch to 64-bit indexing.

[rc] Return code; equals `ESMF_SUCCESS` if there are no errors.

37.6.10 ESMF_DistGridCreate - Create 1D DistGrid object from user's arbitrary sequence index list 1 DE per PET

INTERFACE:

```
! Private name; call using ESMF_DistGridCreate()
function ESMF_DistGridCreateDBAI1D1DE(arbSeqIndexList, rc)
```

RETURN VALUE:

```
type(ESMF_DistGrid) :: ESMF_DistGridCreateDBAI1D1DE
```

ARGUMENTS:

```
 integer, intent(in)            :: arbSeqIndexList(:)
-- The following arguments require argument keyword syntax (e.g. rc=rc). --
 integer, intent(out), optional :: rc
```

STATUS:

- This interface is backward compatible with ESMF versions starting at 5.2.0r. If code using this interface compiles with any version of ESMF starting with 5.2.0r, then it will compile with the current version.

DESCRIPTION:

Create an `ESMF_DistGrid` of `dimCount` 1 from a PET-local list of sequence indices. The PET-local size of the `arbSeqIndexList` argument determines the number of local elements in the created DistGrid. The sequence indices must be unique across all PETs. A default DELayout with 1 DE per PET across all PETs of the current VM is automatically created.

This is a *collective* method across the current VM.

The arguments are:

arbSeqIndexList List of arbitrary sequence indices that reside on the local PET.

[rc] Return code; equals `ESMF_SUCCESS` if there are no errors.

37.6.11 ESMF_DistGridCreate - Create 1D DistGrid object from user's arbitrary 64-bit sequence index list 1 DE per PET

INTERFACE:

```
! Private name; call using ESMF_DistGridCreate()
function ESMF_DistGridCreateDBAI1D1DEI8(arbSeqIndexList, rc)
```

RETURN VALUE:

```
type(ESMF_DistGrid) :: ESMF_DistGridCreateDBAI1D1DEI8
```

ARGUMENTS:

```
     integer(ESMF_KIND_I8),  intent(in)            :: arbSeqIndexList(:)
 -- The following arguments require argument keyword syntax (e.g. rc=rc). --
     integer,                intent(out), optional :: rc
```

DESCRIPTION:

Create an `ESMF_DistGrid` of `dimCount` 1 from a PET-local list of sequence indices. The PET-local size of the `arbSeqIndexList` argument determines the number of local elements in the created DistGrid. The sequence indices must be unique across all PETs. A default DELayout with 1 DE per PET across all PETs of the current VM is automatically created.

This is a *collective* method across the current VM.

The arguments are:

arbSeqIndexList List of arbitrary sequence indices that reside on the local PET.

[rc] Return code; equals `ESMF_SUCCESS` if there are no errors.

37.6.12 ESMF_DistGridCreate - Create 1D DistGrid object from user's arbitrary sequence index list multiple DE/PET

INTERFACE:

```
! Private name; call using ESMF_DistGridCreate()
function ESMF_DistGridCreateDBAI1D(arbSeqIndexList, rc)
```

RETURN VALUE:

```
type(ESMF_DistGrid) :: ESMF_DistGridCreateDBAI1D
```

ARGUMENTS:

```
     type(ESMF_PtrInt1D), intent(in) :: arbSeqIndexList(:)
 -- The following arguments require argument keyword syntax (e.g. rc=rc). --
     integer, intent(out), optional  :: rc
```

DESCRIPTION:

Create an `ESMF_DistGrid` of `dimCount` 1 from a PET-local list of sequence index lists. The PET-local size of the `arbSeqIndexList` argument determines the number of local DEs in the created DistGrid. Each of the local DEs is associated with as many index space elements as there are arbitrary sequence indices in the associated list. The sequence indices must be unique across all DEs. A default DELayout with the correct number of DEs per PET is automatically created.

This is a *collective* method across the current VM.

The arguments are:

arbSeqIndexList List of arbitrary sequence index lists that reside on the local PET.

[rc] Return code; equals `ESMF_SUCCESS` if there are no errors.

37.6.13 ESMF_DistGridCreate - Create (1+n)D DistGrid object from user's arbitrary sequence index list and minIndexPTile/maxIndexPTile

INTERFACE:

```
! Private name; call using ESMF_DistGridCreate()
function ESMF_DistGridCreateDBAI(arbSeqIndexList, arbDim, &
  minIndexPTile, maxIndexPTile, rc)
```

RETURN VALUE:

```
type(ESMF_DistGrid) :: ESMF_DistGridCreateDBAI
```

ARGUMENTS:

```
     integer, intent(in)            :: arbSeqIndexList(:)
     integer, intent(in)            :: arbDim
     integer, intent(in)            :: minIndexPTile(:)
     integer, intent(in)            :: maxIndexPTile(:)
 -- The following arguments require argument keyword syntax (e.g. rc=rc). --
     integer, intent(out), optional :: rc
```

STATUS:

- This interface is backward compatible with ESMF versions starting at 5.2.0r. If code using this interface compiles with any version of ESMF starting with 5.2.0r, then it will compile with the current version.

DESCRIPTION:

Create an `ESMF_DistGrid` of `dimCount` $1 + n$, where n = `size(minIndexPTile)` = `size(maxIndexPTile)`.

The resulting DistGrid will have a 1D distribution determined by the PET-local `arbSeqIndexList`. The PET-local size of the `arbSeqIndexList` argument determines the number of local elements along the arbitrarily distributed dimension in the created DistGrid. The sequence indices must be unique across all PETs. The associated, automatically created DELayout will have 1 DE per PET across all PETs of the current VM.

In addition to the arbitrarily distributed dimension, regular DistGrid dimensions can be specified in `minIndexPTile` and `maxIndexPTile`. The n dimensional subspace spanned by the regular dimensions is "multiplied" with the arbitrary dimension on each DE, to form a $1 + n$ dimensional total index space described by the DistGrid object. The `arbDim` argument allows to specify which dimension in the resulting DistGrid corresponds to the arbitrarily distributed one.

This is a *collective* method across the current VM.

The arguments are:

arbSeqIndexList List of arbitrary sequence indices that reside on the local PET.

arbDim Dimension of the arbitrary distribution.

minIndexPTile Index space tuple of the lower corner of the tile. The arbitrary dimension is *not* included in this tile

maxIndexPTile Index space tuple of the upper corner of the tile. The arbitrary dimension is *not* included in this tile

[rc] Return code; equals `ESMF_SUCCESS` if there are no errors.

37.6.14 ESMF_DistGridDestroy - Release resources associated with a DistGrid

INTERFACE:

```
subroutine ESMF_DistGridDestroy(distgrid, noGarbage, rc)
```

ARGUMENTS:

```
    type(ESMF_DistGrid), intent(inout)          :: distgrid
-- The following arguments require argument keyword syntax (e.g. rc=rc). --
    logical,             intent(in),   optional :: noGarbage
    integer,             intent(out),  optional :: rc
```

STATUS:

- This interface is backward compatible with ESMF versions starting at 5.2.0r. If code using this interface compiles with any version of ESMF starting with 5.2.0r, then it will compile with the current version.
- This interface was modified since ESMF version 5.2.0r. The fact that code using this interface compiles with the current ESMF version does not guarantee that it compiles with previous versions of this interface. If user code compatibility with version 5.2.0r is desired then care must be taken to limit the use of this interface to features that were available in the 5.2.0r release.
  Changes made after the 5.2.0r release:

  7.0.0 Added argument `noGarbage`. The argument provides a mechanism to override the default garbage collection mechanism when destroying an ESMF object.

DESCRIPTION:

Destroys an `ESMF_DistGrid`, releasing the resources associated with the object.

By default a small remnant of the object is kept in memory in order to prevent problems with dangling aliases. The default garbage collection mechanism can be overridden with the `noGarbage` argument.

The arguments are:

distgrid `ESMF_DistGrid` object to be destroyed.

[noGarbage] If set to `.TRUE.` the object will be fully destroyed and removed from the ESMF garbage collection system. Note however that under this condition ESMF cannot protect against accessing the destroyed object through dangling aliases – a situation which may lead to hard to debug application crashes.

It is generally recommended to leave the `noGarbage` argument set to `.FALSE.` (the default), and to take advantage of the ESMF garbage collection system which will prevent problems with dangling aliases or incorrect sequences of destroy calls. However this level of support requires that a small remnant of the object is kept in memory past the destroy call. This can lead to an unexpected increase in memory consumption over the course of execution in applications that use temporary ESMF objects. For situations where the repeated creation and destruction of temporary objects leads to memory issues, it is recommended to call with `noGarbage` set to `.TRUE.`, fully removing the entire temporary object from memory.

[rc] Return code; equals `ESMF_SUCCESS` if there are no errors.

37.6.15 ESMF_DistGridGet - Get object-wide DistGrid information

INTERFACE:

```
! Private name; call using ESMF_DistGridGet()
subroutine ESMF_DistGridGetDefault(distgrid, delayout, &
  dimCount, tileCount, deCount, localDeCount, minIndexPTile, maxIndexPTile, &
```

```
    elementCountPTile, elementCountPTileI8, minIndexPDe, maxIndexPDe, &
    elementCountPDe, elementCountPDeI8, localDeToDeMap, deToTileMap, &
    indexCountPDe, collocation, regDecompFlag, indexTK, indexflag, &
    connectionCount, connectionList, rc)
```

ARGUMENTS:

```
    type(ESMF_DistGrid),      intent(in)            :: distgrid
-- The following arguments require argument keyword syntax (e.g. rc=rc). --
    type(ESMF_DELayout),      intent(out), optional :: delayout
    integer,                  intent(out), optional :: dimCount
    integer,                  intent(out), optional :: tileCount
    integer,                  intent(out), optional :: deCount
    integer,                  intent(out), optional :: localDeCount
    integer,          target, intent(out), optional :: minIndexPTile(:,:)
    integer,          target, intent(out), optional :: maxIndexPTile(:,:)
    integer,          target, intent(out), optional :: elementCountPTile(:)
integer(ESMF_KIND_I8),target, intent(out), optional :: elementCountPTileI8(:)
    integer,          target, intent(out), optional :: minIndexPDe(:,:)
    integer,          target, intent(out), optional :: maxIndexPDe(:,:)
    integer,          target, intent(out), optional :: elementCountPDe(:)
integer(ESMF_KIND_I8),target, intent(out), optional :: elementCountPDeI8(:)
    integer,          target, intent(out), optional :: localDeToDeMap(:)
    integer,          target, intent(out), optional :: deToTileMap(:)
    integer,          target, intent(out), optional :: indexCountPDe(:,:)
    integer,          target, intent(out), optional :: collocation(:)
    logical,                  intent(out), optional :: regDecompFlag
    type(ESMF_TypeKind_Flag), intent(out), optional :: indexTK
    type(ESMF_Index_Flag),    intent(out), optional :: indexflag
    integer,                  intent(out), optional :: connectionCount
    type(ESMF_DistGridConnection), &
                      target, intent(out), optional :: connectionList(:)
    integer,                  intent(out), optional :: rc
```

STATUS:

- This interface is backward compatible with ESMF versions starting at 5.2.0r. If code using this interface compiles with any version of ESMF starting with 5.2.0r, then it will compile with the current version.
- This interface was modified since ESMF version 5.2.0r. The fact that code using this interface compiles with the current ESMF version does not guarantee that it compiles with previous versions of this interface. If user code compatibility with version 5.2.0r is desired then care must be taken to limit the use of this interface to features that were available in the 5.2.0r release.
  Changes made after the 5.2.0r release:

  7.0.0 Added argument `deCount` to simplify access to this variable.
  Added arguments `connectionCount` and `connectionList` to provide user access to the explicitly defined connections in a DistGrid.

  8.0.0 Added arguments `localDeCount` and `localDeToDeMap` to simplify access to these variables.

  8.1.0 Added argument `indexTK` to allow query of the sequence index typekind.
  Added arguments `elementCountPTileI8` and `elementCountPDeI8` to provide 64-bit access.
  Added argument `indexflag` to allow user to query this setting.

DESCRIPTION:

Access internal DistGrid information.

The arguments are:

distgrid Queried `ESMF_DistGrid` object.

[delayout] `ESMF_DELayout` object associated with `distgrid`.

[dimCount] Number of dimensions (rank) of `distgrid`.

[tileCount] Number of tiles in `distgrid`.

[deCount] Number of DEs in the DELayout in `distgrid`.

[localDeCount] Number of local DEs in the DELayout in `distgrid` on this PET.

[minIndexPTile] Lower index space corner per tile. Must enter allocated with `shape(minIndexPTile) == (/dimCount, tileCount/)`.

[maxIndexPTile] Upper index space corner per tile. Must enter allocated with `shape(maxIndexPTile) == (/dimCount, tileCount/)`.

[elementCountPTile] Number of elements in the exclusive region per tile. Must enter allocated with `shape(elementCountPTile) == (/tileCount/)`. An error will be returned if any of the counts goes above the 32-bit limit.

[elementCountPTileI8] Same as `elementCountPTile`, but of 64-bit integer kind.

[minIndexPDe] Lower index space corner per DE. Must enter allocated with `shape(minIndexPDe) == (/dimCount, deCount/)`.

[maxIndexPDe] Upper index space corner per DE. Must enter allocated with `shape(maxIndexPDe) == (/dimCount, deCount/)`.

[elementCountPDe] Number of elements in the exclusive region per DE. Must enter allocated with `shape(elementCountPDe) == (/deCount/)`. An error will be returned if any of the counts goes above the 32-bit limit.

[elementCountPDeI8] Same as `elementCountPDe`, but of 64-bit integer kind.

[localDeToDeMap] Global DE index for each local DE. Must enter allocated with `shape(localDeToDeMap) == (/localDeCount/)`. It is recommended to use a lower bound of 0 for `localDeToDeMap`, in order to support direct indexing into this map with a zero-based `localDe` variable.

[deToTileMap] Map each DE uniquely to a tile. Must enter allocated with `shape(deToTileMap) == (/deCount/)`. It is recommended to use a lower bound of 0 for `deToTileMap`, in order to support direct indexing into this map with a zero-based `de` variable.

[indexCountPDe] Number of indices for each dimension per DE. Must enter allocated with `shape(indexCountPDe) == (/dimCount, deCount/)`.

[collocation] Collocation identifier for each dimension. Must enter allocated with `shape(collocation) == (/dimCount/)`.

[regDecompFlag] Decomposition scheme. A return value of `.true.` indicates a regular decomposition, i.e. the decomposition is based on a logically rectangular scheme with specific number of DEs along each dimension. A return value of `.false.` indicates that the decomposition was *not* generated from a regular decomposition description, e.g. a `deBlockList` was used instead.

[indexTK] Typekind used by the global sequence indexing. See section 55.61 for a list of typekind options. Only the integer types are supported for sequence indices.

[indexflag] Return the indexing option used by the `distgrid` object. See section 55.29 for a complete list of options.

[connectionCount] Number of explicitly defined connections in `distgrid`.

[connectionList] List of explicitly defined connections in `distgrid`. Must enter allocated with `shape(connectionList) == (/connectionCount/)`.

[rc] Return code; equals `ESMF_SUCCESS` if there are no errors.

37.6.16 ESMF_DistGridGet - Get DE-local DistGrid information

INTERFACE:

```
! Private name; call using ESMF_DistGridGet()
subroutine ESMF_DistGridGetPLocalDe(distgrid, localDe, &
  de, tile, collocation, arbSeqIndexFlag, seqIndexList, seqIndexListI8, &
  elementCount, elementCountI8, rc)
```

ARGUMENTS:

```
    type(ESMF_DistGrid),      intent(in)            :: distgrid
    integer,                  intent(in)            :: localDe
-- The following arguments require argument keyword syntax (e.g. rc=rc). --
    integer,                  intent(out), optional :: de
    integer,                  intent(out), optional :: tile
    integer,                  intent(in),  optional :: collocation
    logical,                  intent(out), optional :: arbSeqIndexFlag
    integer,          target, intent(out), optional :: seqIndexList(:)
integer(ESMF_KIND_I8),target, intent(out), optional :: seqIndexListI8(:)
    integer,                  intent(out), optional :: elementCount
    integer,                  intent(out), optional :: elementCountI8
    integer,                  intent(out), optional :: rc
```

STATUS:

- This interface is backward compatible with ESMF versions starting at 5.2.0r. If code using this interface compiles with any version of ESMF starting with 5.2.0r, then it will compile with the current version.
- This interface was modified since ESMF version 5.2.0r. The fact that code using this interface compiles with the current ESMF version does not guarantee that it compiles with previous versions of this interface. If user code compatibility with version 5.2.0r is desired then care must be taken to limit the use of this interface to features that were available in the 5.2.0r release.
  Changes made after the 5.2.0r release:

  8.0.0 Added arguments `de` and `tile` to simplify usage.

  8.1.0 Added arguments `seqIndexListI8` and `elementCountI8` to provide 64-bit access.

DESCRIPTION:

Access internal DistGrid information.

The arguments are:

distgrid Queried `ESMF_DistGrid` object.

localDe Local DE for which information is requested. `[0,..,localDeCount-1]`

[de] The global DE associated with the `localDe`. DE indexing starts at 0.

[tile] The tile on which the `localDe` is located. Tile indexing starts at 1.

[collocation] Collocation for which information is requested. Default to first collocation in `collocation` list.

[arbSeqIndexFlag] A returned value of `.true.` indicates that the `collocation` is associated with arbitrary sequence indices. For `.false.`, canoncial sequence indices are used.

[seqIndexList] The sequence indices associated with the `localDe`. This argument must enter allocated with a size equal to `elementCountPDe(localDeToDeMap(localDe))`. An error will be returned if any of the sequence indices are above the 32-bit limit.

[seqIndexListI8] Same as `seqIndexList`, but of 64-bit integer kind.

[elementCount] Number of elements in the localDe, i.e. identical to elementCountPDe(localDeToDeMap(localDe)). An error will be returned if the count is above the 32-bit limit.

[elementCountI8] Same as `elementCount`, but of 64-bit integer kind.

[rc] Return code; equals `ESMF_SUCCESS` if there are no errors.

37.6.17 ESMF_DistGridGet - Get DE-local DistGrid information for a specific dimension

INTERFACE:

```
! Private name; call using ESMF_DistGridGet()
subroutine ESMF_DistGridGetPLocalDePDim(distgrid, localDe, dim, &
         indexList, rc)
```

ARGUMENTS:

```
     type(ESMF_DistGrid),    intent(in)            :: distgrid
     integer,                intent(in)            :: localDe
     integer,                intent(in)            :: dim
     integer,        target, intent(out)           :: indexList(:)
 -- The following arguments require argument keyword syntax (e.g. rc=rc). --
     integer,                intent(out), optional :: rc
```

STATUS:

- This interface is backward compatible with ESMF versions starting at 5.2.0r. If code using this interface compiles with any version of ESMF starting with 5.2.0r, then it will compile with the current version.

DESCRIPTION:

Access internal DistGrid information.

The arguments are:

distgrid Queried `ESMF_DistGrid` object.

localDe Local DE for which information is requested. `[0,..,localDeCount-1]`

dim Dimension for which information is requested. `[1,..,dimCount]`

indexList Upon return this holds the list of DistGrid tile-local indices for `localDe` along dimension `dim`. The supplied variable must be at least of size `indexCountPDe(dim, localDeToDeMap(localDe))`.

[rc] Return code; equals `ESMF_SUCCESS` if there are no errors.

37.6.18 ESMF_DistGridIsCreated - Check whether a DistGrid object has been created

INTERFACE:

```
function ESMF_DistGridIsCreated(distgrid, rc)
```

RETURN VALUE:

```
logical :: ESMF_DistGridIsCreated
```

ARGUMENTS:

```
     type(ESMF_DistGrid), intent(in)            :: distgrid
 -- The following arguments require argument keyword syntax (e.g. rc=rc). --
     integer,             intent(out), optional :: rc
```

DESCRIPTION:

Return `.true.` if the `distgrid` has been created. Otherwise return `.false.`. If an error occurs, i.e. `rc /= ESMF_SUCCESS` is returned, the return value of the function will also be `.false.`.

The arguments are:

distgrid `ESMF_DistGrid` queried.

[rc] Return code; equals `ESMF_SUCCESS` if there are no errors.

37.6.19 ESMF_DistGridLog - Log DistGrid information

INTERFACE:

```
subroutine ESMF_DistGridLog(distgrid, prefix, logMsgFlag, deepFlag, rc)
```

ARGUMENTS:

```
     type(ESMF_DistGrid),    intent(in)              :: distgrid
 -- The following arguments require argument keyword syntax (e.g. rc=rc). --
     character(len=*),       intent(in),   optional  :: prefix
     type(ESMF_LogMsg_Flag), intent(in),   optional  :: logMsgFlag
     logical,                intent(in),   optional  :: deepFlag
     integer, intent(out),                 optional  :: rc
```

DESCRIPTION:

Write information about `DistGrid` to the ESMF default Log.

The arguments are:

distgrid `ESMF_DistGrid` object logged.

[prefix] String to prefix the log message. Default is no prefix.

[logMsgFlag] Type of log message generated. See section 50.2.3 for a list of valid message types. Default is `ESMF_LOGMSG_INFO`.

[deepFlag] When set to `.false.` (default), only log top level information about the DistGrid. When set to `.true.`, additionally log deep information.

[rc] Return code; equals `ESMF_SUCCESS` if there are no errors.

37.6.20 ESMF_DistGridMatch - Check if two DistGrid objects match

INTERFACE:

```
function ESMF_DistGridMatch(distgrid1, distgrid2, rc)
```

RETURN VALUE:

```
     type(ESMF_DistGridMatch_Flag) :: ESMF_DistGridMatch
```

ARGUMENTS:

```
     type(ESMF_DistGrid),  intent(in)            :: distgrid1
     type(ESMF_DistGrid),  intent(in)            :: distgrid2
 -- The following arguments require argument keyword syntax (e.g. rc=rc). --
     integer,              intent(out), optional :: rc
```

DESCRIPTION:

Determine to which level `distgrid1` and `distgrid2` match.

Returns a range of values of type `ESMF_DistGridMatch_Flag`, indicating how closely the DistGrids match. For a description of the possible return values, see 37.2.1. Note that this call only performs PET local matching. Different return values may be returned on different PETs for the same DistGrid pair.

The arguments are:

distgrid1 `ESMF_DistGrid` object.

distgrid2 `ESMF_DistGrid` object.

[rc] Return code; equals `ESMF_SUCCESS` if there are no errors.

37.6.21 ESMF_DistGridPrint - Print DistGrid information

INTERFACE:

```
subroutine ESMF_DistGridPrint(distgrid, rc)
```

ARGUMENTS:

```
    type(ESMF_DistGrid),  intent(in)            :: distgrid
-- The following arguments require argument keyword syntax (e.g. rc=rc). --
    integer,              intent(out), optional :: rc
```

STATUS:

- This interface is backward compatible with ESMF versions starting at 5.2.0r. If code using this interface compiles with any version of ESMF starting with 5.2.0r, then it will compile with the current version.

DESCRIPTION:

Prints internal information about the specified `ESMF_DistGrid` object to `stdout`.

The arguments are:

distgrid Specified `ESMF_DistGrid` object.

[rc] Return code; equals `ESMF_SUCCESS` if there are no errors.

37.6.22 ESMF_DistGridSet - Set arbitrary sequence for a specific local DE

INTERFACE:

```
! Private name; call using ESMF_DistGridSet()
subroutine ESMF_DistGridSetPLocalDe(distgrid, localDe, collocation, &
  seqIndexList, seqIndexListI8, rc)
```

ARGUMENTS:

```
     type(ESMF_DistGrid),      intent(inout)         :: distgrid
     integer,                  intent(in)            :: localDe
 -- The following arguments require argument keyword syntax (e.g. rc=rc). --
     integer,                  intent(in),  optional :: collocation
     integer,          target, intent(in),  optional :: seqIndexList(:)
 integer(ESMF_KIND_I8),target, intent(in),  optional :: seqIndexListI8(:)
     integer,                  intent(out), optional :: rc
```

DESCRIPTION:

Set DistGrid information for a specific local DE.

The arguments are:

distgrid Queried `ESMF_DistGrid` object.

localDe Local DE for which information is set. `[0,..,localDeCount-1]`

[collocation] Collocation for which information is set. Default to first collocation in `collocation` list.

[seqIndexList] Sequence indices for the elements on `localDe`. The `seqIndexList` must provide exactly `elementCountPDe(localDeToDeMap(localDe)` many entries. When this argument is present, the `indexTK` of `distgrid` will be set to `ESMF_TYPEKIND_I4`. This argument is mutually exclusive with `seqIndexListI8`. Only one or the other must be provided. An error will be returned otherwise.

[seqIndexListI8] Same as `seqIndexList`, but of 64-bit integer kind. When this argument is present, the `indexTK` of `distgrid` will be set to `ESMF_TYPEKIND_I8`. This argument is mutually exclusive with `seqIndexList`. Only one or the other must be provided. An error will be returned otherwise.

[rc] Return code; equals `ESMF_SUCCESS` if there are no errors.

37.6.23 ESMF_DistGridValidate - Validate DistGrid internals

INTERFACE:

```
subroutine ESMF_DistGridValidate(distgrid, rc)
```

ARGUMENTS:

```
    type(ESMF_DistGrid),  intent(in)            :: distgrid
 -- The following arguments require argument keyword syntax (e.g. rc=rc). --
    integer,              intent(out), optional :: rc
```

STATUS:

- This interface is backward compatible with ESMF versions starting at 5.2.0r. If code using this interface compiles with any version of ESMF starting with 5.2.0r, then it will compile with the current version.

DESCRIPTION:

Validates that the `distgrid` is internally consistent. The method returns an error code if problems are found.

The arguments are:

distgrid Specified `ESMF_DistGrid` object.

[rc] Return code; equals `ESMF_SUCCESS` if there are no errors.

37.7 Class API: DistGridConnection Methods

37.7.1 ESMF_DistGridConnectionGet - Get DistGridConnection

INTERFACE:

```
  subroutine ESMF_DistGridConnectionGet(connection, &
    tileIndexA, tileIndexB, dimCount, positionVector, orientationVector, rc)
```

ARGUMENTS:

```
    type(ESMF_DistGridConnection), intent(in)            :: connection
 -- The following arguments require argument keyword syntax (e.g. rc=rc). --
    integer,                       intent(out), optional :: tileIndexA
    integer,                       intent(out), optional :: tileIndexB
    integer,                       intent(out), optional :: dimCount
    integer,                       intent(out), optional :: positionVector(:)
    integer,                       intent(out), optional :: orientationVector(:)
    integer,                       intent(out), optional :: rc
```

DESCRIPTION:

Get connection parameters from an `ESMF_DistGridConnection` object. This interface provides access to all variables required to create a new connection using the `ESMF_DistGridConnectionSet()` method.

The arguments are:

connection DistGridConnection object.

[tileIndexA] Index of one of the two connected tiles.

[tileIndexB] Index of the other connected tile.

[dimCount] Number of dimensions of `positionVector`.

[positionVector] Position of tile B's minIndex with respect to tile A's minIndex. This array's size should be at least equal to `dimCount`.

[orientationVector] Lists which dimension of tile A is associated to which dimension of tile B. Negative index values may be used to indicate a reversal in index orientation. Should be at least of size `dimCount`.

[rc] Return code; equals `ESMF_SUCCESS` if there are no errors.

37.7.2 ESMF_DistGridConnectionSet - Set DistGridConnection

INTERFACE:

```
subroutine ESMF_DistGridConnectionSet(connection, tileIndexA, tileIndexB, &
  positionVector, orientationVector, rc)
```

ARGUMENTS:

```
     type(ESMF_DistGridConnection),intent(out)         :: connection
     integer,                      intent(in)          :: tileIndexA
     integer,                      intent(in)          :: tileIndexB
     integer,                      intent(in)          :: positionVector(:)
 -- The following arguments require argument keyword syntax (e.g. rc=rc). --
     integer,                      intent(in), optional :: orientationVector(:)
     integer,                      intent(out), optional:: rc
```

STATUS:

- This interface is backward compatible with ESMF versions starting at 5.2.0r. If code using this interface compiles with any version of ESMF starting with 5.2.0r, then it will compile with the current version.

DESCRIPTION:

Set an `ESMF_DistGridConnection` object to represent a connection according to the provided index space information.

The arguments are:

connection DistGridConnection object.

tileIndexA Index of one of the two tiles that are to be connected.

tileIndexB Index of one of the two tiles that are to be connected.

positionVector Position of tile B's minIndex with respect to tile A's minIndex.

[orientationVector] Associates each dimension of tile A with a dimension in tile B's index space. Negative index values may be used to indicate a reversal in index orientation. It is erroneous to associate multiple dimensions of tile A with the same index in tile B. By default `orientationVector = (/1,2,3,.../)`, i.e. same orientation as tile A.

[rc] Return code; equals `ESMF_SUCCESS` if there are no errors.

37.8 Class API: DistGridRegDecomp Methods

37.8.1 ESMF_DistGridRegDecompSetCubic - Construct a DistGrid regDecomp

INTERFACE:

```
subroutine ESMF_DistGridRegDecompSetCubic(regDecomp, deCount, rc)
```

ARGUMENTS:

```
     integer,        target, intent(out)           :: regDecomp(:)
 -- The following arguments require argument keyword syntax (e.g. rc=rc). --
     integer,                intent(in),  optional :: deCount
     integer,                intent(out), optional :: rc
```

DESCRIPTION:

Construct a regular decomposition argument for DistGrid that is most cubic in `dimCount` dimensions, and multiplies out to `deCount` DEs. The factorization is stable monotonic decreasing, ensuring that earlier entries in `regDecomp` are larger or equal to the later entires.

The arguments are:

regDecomp The regular decomposition description being constructed.

[deCount] The number of DEs. Defaults to `petCount`.

[rc] Return code; equals `ESMF_SUCCESS` if there are no errors.

38 RouteHandle Class

38.1 Description

The ESMF RouteHandle class provides a unified interface for all route-based communication methods across the Field, FieldBundle, Array, and ArrayBundle classes. All route-based communication methods implement a pre-computation step, returning a RouteHandle, an execution step, and a release step. Typically the pre-computation, or Store() step will be a lot more expensive (both in memory and time) than the execution step. The idea is that once precomputed, a RouteHandle will be executed many times over during a model run, making the execution time a very performance critical piece of code. In ESMF, Regridding, Redisting, and Haloing are implemented as route-based communication methods. The following sections discuss the RouteHandle concepts that apply uniformly to all route-based communication methods, across all of the above mentioned classes.

38.2 Use and Examples

The user interacts with the RouteHandle class through the route-based communication methods of Field, FieldBundle, Array, and ArrayBundle. The usage of these methods are described in detail under their respective class documentation section. The following examples focus on the RouteHandle aspects common across classes and methods.

38.2.1 Bit-for-bit reproducibility

Bit-for-bit (bfb) reproducibility is at the core of the regression testing schemes of many scientific model codes. The bfb requirement makes it possible to easily compare the numerical results of simulation runs using standard binary diff tools.

While bfb reproducibility is desirable (and often required) for regression testing, it does limit the available performance optimization opportunities. Especially in highly parallelized code, best performance is often achieved by allowing operations to occur in a flexible order. Under some conditions, however, a change in the order of numerical operations leads to small numerical differences in the results, breaking bfb reproducibility.

ESMF provides the following three levels of bfb reproducibility support, with the associated performance optimization implications:

- Strict bit-for-bit reproducibility: Results are guaranteed to be bit-for-bit identical even when executing across different numbers of PETs. The optimization options are limited to memory layout and message aggregation.
- Relaxed bit-for-bit reproducibility: Results are only guaranteed to be bit-for-bit identical when running across an unchanged number of PETs. The optimization options include partial sums, allowing computational load to be balanced between source and destination PETs, and message sizes to be reduced.
- No guarantee for bit-for-bit reproducibility: Results may differ by numerical round-off. The optimization options include dynamic out-of-order summation of partial sums.

The following discussion uses very simple numerical examples to demonstrate how the order of terms in a sum can lead to results that are not bit-for-bit identical. The examples use single precision, `ESMF_KIND_R4` numbers, but the concepts apply the same to double precision, `ESMF_KIND_R8`; only that the decimals, for which bfb differences in the sums occur, are different ones.

With `sumA`, `sumB`, `sumC`, `sumD`, and `sumE` all of type `real(ESMF_KIND_R4)`, one finds the following bfb differences:

```
sumA = (0.5 + 0.1) + 0.1        ! results in 0.700000048
sumB = 0.5 + (0.1 + 0.1)        ! results in 0.699999988

sumC = 0.5 +  0.2 + 0.1  + 0.1  ! results in 0.900000036
sumD = 0.5 + (0.2 + 0.1) + 0.1  ! results in 0.900000036
sumE = 0.5 + (0.2 + 0.1 + 0.1)  ! results in 0.899999976
```

These differences result from the fact that many decimals (even very simple ones like 0.1 or 0.2) lead to periodic binary floating point numbers. Periodic floating point numbers must be truncated when represented by a finite number of bits, leading to small rounding errors. Further truncation occurs when the radix point of two numbers must be aligned during floating point arithmetic, resulting in bit shifts for one of the numbers. The resulting truncation error depends on the precise numbers that need alignment. As a result, executing the "same" sum in a different order can lead to different truncation steps and consequently in results that are not bit-for-bit identical.

In order to help users with the implementation of their bfb requirement, ESMF provides different levels of control over the term order in sparse matrix multiplications, while at the same time offering performance optimization options. In all there are *three* arguments that will be introduced in the following paragraphs: `srcTermProcessing`, `termorderflag`, and `pipelineDepth`.

For the purpose of demonstration, a one-dimensional, arbitrarily distributed source Array is constructed. There are three Array elements on each of the four PETs. Their local storage indices, sequence indices, and data values are as follows:

PET	index	sequence index	data value
0	1	1	0.5
0	2	6	0.1
0	3	9	0.1
1	1	4	0.5
1	2	3	0.1
1	3	10	0.1
2	1	11	0.5
2	2	7	0.1
2	3	5	0.1
3	1	8	0.1
3	2	2	0.2
3	3	12	0.1

The destination Array consists of only a single element, located on PET 0:

PET	index	sequence index	data value
0	1	1	n/a

As a first example consider the following sparse matrix with three entries:

```
factorIndexList(1,1) = 1  ! src seq index
factorIndexList(2,1) = 1  ! dst seq index
factorList(1) = 1.
factorIndexList(1,2) = 6  ! src seq index
factorIndexList(2,2) = 1  ! dst seq index
factorList(2) = 1.
factorIndexList(1,3) = 9  ! src seq index
factorIndexList(2,3) = 1  ! dst seq index
factorList(3) = 1.
```

In ESMF, the order in which the sparse matrix entries are specified in `factorIndexList` and `factorList`, or on which PET they are provided, is completely irrelevant. The term order in the resulting sparse matrix sums is not affected by it.

There is one aspect of the sparse matrix format, however, that is relevant to the bfb considerations: When multiple entries for the same (src, dst) pair are present in a sparse matrix definition, the entries are summed into a single (src, dst) entry. Therefore, even if there are multiple sparse matrix entries for the same (src, dst) pair, there will only be a single term for it in the resulting expression.

Going back to the three term sparse matrix definition above, the *canonical* term order is defined by the source sequence indices in ascending order. With `(src,dst)` denoting the sparse matrix factors, and `s(src)` and `d(dst)` denoting source and destination Array elements, respectively, for `src` and `dst` sequence indices, the sum in canonical order is:

d(1) = (1,1)*s(1) + (6,1)*s(6) + (9,1)*s(9)

For simplicity, the factors in all of the examples are set to `1.0`, allowing us to drop them in the expressions. This helps focus on the critical issue – term order:

d(1) = s(1) + s(6) + s(9)

There are two parameters that affect term order in the ESMF sparse matrix multiplication (SMM), and therefore must be considered in the context of bfb reproducibility. First there is the `srcTermProcessing` parameter which controls grouping of source terms located on the same PET. The value of the `srcTermProcessing` parameter indicates the maximum number of terms that may be grouped into partial sums on the source PET. Setting `srcTermProcessing` to 1 means that no partial sums are formed on the source side, however, the source terms are multiplied with their respective sparse matrix factor before being sent to the destination PET. Setting `srcTermProcessing` to 0 prevents these products from being carried out on the source side, and the source Array elements are sent unmodified. Depending on the distribution of the source Array, values greater than 1 for `srcTermProcessing` can lead to partial sums and thus may have impact on the bfb reproducibility of the SMM.

The second parameter that may have bfb effects comes into play at execution-time of a precomputed RouteHandle. It is accessible via the `termorderflag` argument; a typed flag with the following values:

- `ESMF_TERMORDER_SRCSEQ` – Strictly enforces the canonical order of the source terms according to the source sequence index. However, terms that are grouped together in the RouteHandle at store-time, as a consequence of `srcTermProcessing`, are treated as single entities with a sequence index equal to the lowest original sequence index in the group. Use `ESMF_TERMORDER_SRCSEQ` together with `srcTermProcessing=0` or `srcTermProcessing=1` when strict bfb reproducibility is required independent of the source Array distribution, e.g. for different number of PETs.
- `ESMF_TERMORDER_SRCPET` – The source terms in the sum are first arranged according to the relative position of the PET on which they reside with respect to the destination PET. Second, all the terms coming from the same PET are sorted in canonical sequence index order and summed into partial sums. Again, terms that are grouped together in the RouteHandle at store-time are treated as single entities with a sequence index equal to the lowest original sequence index in the group. The final result for each destination element is determined by adding the partial sums in an order that is fixed by the position of the partial sums' source PETs relative to the destination PET. This ensures bfb reproducibility of the result as long as the number of PETs remains unchanged.
- `ESMF_TERMORDER_FREE` – For this option there are no restrictions on the term order. Terms can be summed in any order, and the order may change each time the RouteHandle is executed. This option grants greatest flexibility to the RouteHandle execution implementation. It is available for all the methods that take the `termorderflag` argument. Without a guaranteed source term order, the `ESMF_TERMORDER_FREE` option is not suitable for situations that require bfb reproducibility.

ESMF_TERMORDER_SRCSEQ

First using `srcTermProcessing=0` at store time and `termorderflag=ESMF_TERMORDER_SRCSEQ` at execution time, the canonical term order is expected:

d(1) = s(1) + s(6) + s(9) = 0.5 + 0.1 + 0.1 = sumA

```
! forced srcTermProcessing
srcTermProcessing = 0

call ESMF_ArraySMMStore(srcArray, dstArray, &
  factorIndexList=factorIndexList, factorList=factorList, &
  routehandle=rh, srcTermProcessing=srcTermProcessing, rc=rc)
```

```
call ESMF_ArraySMM(srcArray, dstArray, routehandle=rh, &
  termorderflag=ESMF_TERMORDER_SRCSEQ, rc=rc)

if (localPet == 0) then
  print *, "result SRCSEQ#1 = ", farrayPtr(1), " expect: ", sumA
  if (farrayPtr(1) /= sumA) &
    finalrc = ESMF_FAILURE
endif
```

The order of source terms across PETs is expected to have no effect on the bfb reproducibility of the result for `ESMF_TERMORDER_SRCSEQ`. To test this, a sparse matrix is used where the source terms originate from different PETs.

```
  factorIndexList(1,1) = 4  ! src seq index
  factorIndexList(2,1) = 1  ! dst seq index
  factorList(1) = 1.
  factorIndexList(1,2) = 5  ! src seq index
  factorIndexList(2,2) = 1  ! dst seq index
  factorList(2) = 1.
  factorIndexList(1,3) = 12 ! src seq index
  factorIndexList(2,3) = 1  ! dst seq index
  factorList(3) = 1.
```

Again the `srcTermProcessing` argument is kept at 0, ensuring that none of the source terms are grouped into partial sums.

```
! forced srcTermProcessing
srcTermProcessing = 0

call ESMF_ArraySMMStore(srcArray, dstArray, &
  factorIndexList=factorIndexList, factorList=factorList, &
  routehandle=rh, srcTermProcessing=srcTermProcessing, rc=rc)

call ESMF_ArraySMM(srcArray, dstArray, routehandle=rh, &
  termorderflag=ESMF_TERMORDER_SRCSEQ, rc=rc)
```

Under `ESMF_TERMORDER_SRCSEQ` it does not matter on which PET a source term is located, the order of source terms is strictly defined by the order of source sequence indices:

d(1) = s(4) + s(5) + s(12) = 0.5 + 0.1 + 0.1 = sumA

```
if (localPet == 0) then
  print *, "result SRCSEQ#2 = ", farrayPtr(1), " expect: ", sumA
  if (farrayPtr(1) /= sumA) &
    finalrc = ESMF_FAILURE
endif
```

The same sparse matrix leads to bfb differences in the result when executed with the `ESMF_TERMORDER_SRCPET` option. This is demonstrated further down in result `SRCPET#4`.

ESMF_TERMORDER_SRCPET

All source terms coming from the same PET

In the following examples the `srcTermProcessing` argument at store-time is first set to 0, forcing all of the source terms to be sent to the destination PET unmodified. We start by going back to the initial sparse matrix where all of the source terms are located on the same PET.

```
    factorIndexList(1,1) = 1  ! src seq index
    factorIndexList(2,1) = 1  ! dst seq index
    factorList(1) = 1.
    factorIndexList(1,2) = 6  ! src seq index
    factorIndexList(2,2) = 1  ! dst seq index
    factorList(2) = 1.
    factorIndexList(1,3) = 9  ! src seq index
    factorIndexList(2,3) = 1  ! dst seq index
    factorList(3) = 1.

  ! forced srcTermProcessing
  srcTermProcessing=0

  call ESMF_ArraySMMStore(srcArray, dstArray, &
    factorIndexList=factorIndexList, factorList=factorList, &
    routehandle=rh, srcTermProcessing=srcTermProcessing, rc=rc)
```

Then, at execution time, the `ESMF_TERMORDER_SRCPET` option is used.

```
  call ESMF_ArraySMM(srcArray, dstArray, routehandle=rh, &
    termorderflag=ESMF_TERMORDER_SRCPET, rc=rc)
```

Here all of the source elements originate from the same PET (PET 0). This fact, together with the `ESMF_TERMORDER_SRCPET` execution-time option, results in the following canonical term order:

d(1) = s(1) + s(6) + s(9) = 0.5 + 0.1 + 0.1 = sumA

This is exactly the same term order that was used above to produce the result stored in `sumA`.

```
  if (localPet == 0) then
    print *, "result SRCPET#1 = ", farrayPtr(1), " expect: ", sumA
    if (farrayPtr(1) /= sumA) &
      finalrc = ESMF_FAILURE
  endif
```

The sequence indices of the source terms are the only relevant aspect in determining the source term order. Consider, for example, the following sparse matrix, where again all source terms are located on the same PET (PET 2):

```
    factorIndexList(1,1) = 11 ! src seq index
    factorIndexList(2,1) = 1  ! dst seq index
    factorList(1) = 1.
    factorIndexList(1,2) = 5  ! src seq index
    factorIndexList(2,2) = 1  ! dst seq index
    factorList(2) = 1.
    factorIndexList(1,3) = 7  ! src seq index
    factorIndexList(2,3) = 1  ! dst seq index
    factorList(3) = 1.
```

This time the source term order in memory is not the same as their sequence index order. Specifically, the sequence indices of the source terms, in the order they are stored in memory, is 11, 7, 5 (see the source Array diagram above for reference). Further, as mentioned already, the order of entries in the sparse matrix also have not bearing on the term order in the SMM sums. Then, for the `ESMF_TERMORDER_SRCPET` option, and because all source terms are located on the same PET, the resulting source term order is the canonical one determined by the source term sequence indices alone:

d(1) = s(5) + s(7) + s(11)

Filling in the source element data, we find

d(1) = 0.1 + 0.1 + 0.5,

which is expected to be bfb equivalent to the result stored in `sumB` from above.

```
! forced srcTermProcessing
srcTermProcessing=0

call ESMF_ArraySMMStore(srcArray, dstArray, &
  factorIndexList=factorIndexList, factorList=factorList, &
  routehandle=rh, srcTermProcessing=srcTermProcessing, rc=rc)

call ESMF_ArraySMM(srcArray, dstArray, routehandle=rh, &
  termorderflag=ESMF_TERMORDER_SRCPET, rc=rc)

if (localPet == 0) then
  print *, "result SRCPET#2 = ", farrayPtr(1), " expect: ", sumB
  if (farrayPtr(1) /= sumB) &
    finalrc = ESMF_FAILURE
endif
```

Source terms coming from different PETs

When the source terms are distributed across multiple PETs, the `ESMF_TERMORDER_SRCPET` option first bundles the terms according to the PET on which they are stored. These source term "bundles" are then arranged in an order that depends on the source PET position relative to the destination PET: starting with the bundle for which the source PET is the same as the destination PET, the source term bundles are placed in descending order with respect to their source PET, modulo petCount. The terms within each source term bundle are further sorted in the canonical order according to their sequence index.

The following sparse matrix demonstrates the effect of the `ESMF_TERMORDER_SRCPET` option.

```
factorIndexList(1,1) = 1  ! src seq index
factorIndexList(2,1) = 1  ! dst seq index
factorList(1) = 1.
factorIndexList(1,2) = 3  ! src seq index
factorIndexList(2,2) = 1  ! dst seq index
factorList(2) = 1.
factorIndexList(1,3) = 7  ! src seq index
factorIndexList(2,3) = 1  ! dst seq index
factorList(3) = 1.
```

Here the source terms are located on PETs 0, 1, and 2. Using a [] notion to indicate the source PET of each term, the term order under `ESMF_TERMORDER_SRCPET` is given by:

d(1) = s(1)[0] + s(7)[2] + s(3)[1] = 0.5 + 0.1 + 0.1

This is again the same order of terms that was used to produce the result stored in `sumA` above.

```
! forced srcTermProcessing
srcTermProcessing=0

call ESMF_ArraySMMStore(srcArray, dstArray, &
  factorIndexList=factorIndexList, factorList=factorList, &
  routehandle=rh, srcTermProcessing=srcTermProcessing, rc=rc)


call ESMF_ArraySMM(srcArray, dstArray, routehandle=rh, &
  termorderflag=ESMF_TERMORDER_SRCPET, rc=rc)


if (localPet == 0) then
  print *, "result SRCPET#3 = ", farrayPtr(1), " expect: ", sumA
  if (farrayPtr(1) /= sumA) &
    finalrc = ESMF_FAILURE
endif
```

In the above example, the fact that the terms were ordered by source PET first, did not lead to numerical bfb differences compared to the canonical source term order. However, this was purely coincidental in the way the numbers worked out for this example. The following case looks at a situation where the source PET order *does* lead to a result that shows bfb differences compared to the canonical term order.

```
  factorIndexList(1,1) = 4  ! src seq index
  factorIndexList(2,1) = 1  ! dst seq index
  factorList(1) = 1.
  factorIndexList(1,2) = 5  ! src seq index
  factorIndexList(2,2) = 1  ! dst seq index
  factorList(2) = 1.
  factorIndexList(1,3) = 12 ! src seq index
  factorIndexList(2,3) = 1  ! dst seq index
  factorList(3) = 1.
```

The canonical source term order of this SMM sum, determined by the source sequence indices alone, is:

d(1) = s(4) + s(5) + s(12) = 0.5 + 0.1 + 0.1,

which again would lead to a result that is bfb identical to `sumA`. However, this is not the term order resulting from the `ESMF_TERMORDER_SRCPET` option. The actual order for this option is:

d(1) = s(12)[3] + s(5)[2] + s(4)[1] = 0.1 + 0.1 + 0.5,

resulting in a sum that is bfb identical to `sumB` instead.

```
! forced srcTermProcessing
srcTermProcessing=0

call ESMF_ArraySMMStore(srcArray, dstArray, &
  factorIndexList=factorIndexList, factorList=factorList, &
  routehandle=rh, srcTermProcessing=srcTermProcessing, rc=rc)


call ESMF_ArraySMM(srcArray, dstArray, routehandle=rh, &
  termorderflag=ESMF_TERMORDER_SRCPET, rc=rc)


if (localPet == 0) then
```

```
  print *, "result SRCPET#4 = ", farrayPtr(1), " expect: ", sumB
  if (farrayPtr(1) /= sumB) &
    finalrc = ESMF_FAILURE
endif
```

Grouping of source terms coming from the same PET

So far the `srcTermProcessing` argument was kept at 0, and therefore source term grouping had not to be considered. Source term grouping is only possible for terms that originate from the same PET. In preparation for a closer look at the bfb effects of source term grouping, consider a sparse matrix where two of the source terms are located on the same PET.

```
  factorIndexList(1,1) = 1  ! src seq index
  factorIndexList(2,1) = 1  ! dst seq index
  factorList(1) = 1.
  factorIndexList(1,2) = 5  ! src seq index
  factorIndexList(2,2) = 1  ! dst seq index
  factorList(2) = 1.
  factorIndexList(1,3) = 7  ! src seq index
  factorIndexList(2,3) = 1  ! dst seq index
  factorList(3) = 1.
```

Here one of the source terms is located on PET 0 while the other two source terms are originating on PET 2. Keeping the `srcTermProcessing` argument at 0 first, the term order under `ESMF_TERMORDER_SRCPET` is given by:

d(1) = s(1)[0] + s(5)[2] + s(7)[2] = 0.5 + 0.1 + 0.1

And again the result is expected to be bfb identical to the number stored in `sumA`.

```
! forced srcTermProcessing
srcTermProcessing=0

call ESMF_ArraySMMStore(srcArray, dstArray, &
  factorIndexList=factorIndexList, factorList=factorList, &
  routehandle=rh, srcTermProcessing=srcTermProcessing, rc=rc)

call ESMF_ArraySMM(srcArray, dstArray, routehandle=rh, &
  termorderflag=ESMF_TERMORDER_SRCPET, rc=rc)

if (localPet == 0) then
  print *, "result SRCPET#5 = ", farrayPtr(1), " expect: ", sumA
  if (farrayPtr(1) /= sumA) &
    finalrc = ESMF_FAILURE
endif
```

The same result is also expected with `srcTermProcessing` set to 1. A value of 1 indicates that the multiplication of the source term with its sparse matrix factor is carried out on the source side before being sent to the destination PET. The final sum is still carried out in the same order on the destination PET, essentially resulting in the exact same bfb identical sum as for `srcTermProcessing` set to 0.

```
! forced srcTermProcessing
srcTermProcessing=1
```

```
call ESMF_ArraySMMStore(srcArray, dstArray, &
  factorIndexList=factorIndexList, factorList=factorList, &
  routehandle=rh, srcTermProcessing=srcTermProcessing, rc=rc)

call ESMF_ArraySMM(srcArray, dstArray, routehandle=rh, &
  termorderflag=ESMF_TERMORDER_SRCPET, rc=rc)

if (localPet == 0) then
  print *, "result SRCPET#6 = ", farrayPtr(1), " expect: ", sumA
  if (farrayPtr(1) /= sumA) &
    finalrc = ESMF_FAILURE
endif
```

Increasing the `srcTermProcessing` argument to 2 (or higher) results in source term grouping of the terms (up to the number specified in `srcTermProcessing`) that are on the same source PET.

d(1) = s(1)[0] + (s(5)[2] + s(7)[2]) = 0.5 + (0.1 + 0.1)

This result is bfb identical to first adding 0.1 and 0.1 into a partial sum, and then adding this sum to 0.5. This is the exact grouping of terms that was used to obtain the result stored in `sumB` from above.

```
! forced srcTermProcessing
srcTermProcessing=2

call ESMF_ArraySMMStore(srcArray, dstArray, &
  factorIndexList=factorIndexList, factorList=factorList, &
  routehandle=rh, srcTermProcessing=srcTermProcessing, rc=rc)

call ESMF_ArraySMM(srcArray, dstArray, routehandle=rh, &
  termorderflag=ESMF_TERMORDER_SRCPET, rc=rc)

if (localPet == 0) then
  print *, "result SRCPET#7 = ", farrayPtr(1), " expect: ", sumB
  if (farrayPtr(1) /= sumB) &
    finalrc = ESMF_FAILURE
endif
```

In order to explore the effects of the `srcTermProcessing` argument further, more terms on the same source PET are needed in the SMM sum. The following sparse matrix has four entries, three of which originate from the same PET (PET 3).

```
  factorIndexList(1,1) = 1  ! src seq index
  factorIndexList(2,1) = 1  ! dst seq index
  factorList(1) = 1.
  factorIndexList(1,2) = 2  ! src seq index
  factorIndexList(2,2) = 1  ! dst seq index
  factorList(2) = 1.
  factorIndexList(1,3) = 8  ! src seq index
  factorIndexList(2,3) = 1  ! dst seq index
  factorList(3) = 1.
  factorIndexList(1,4) = 12 ! src seq index
  factorIndexList(2,4) = 1  ! dst seq index
  factorList(4) = 1.
```

Setting the `srcTermProcessing` argument back to 0 puts the terms in PET order, and canonical order for each PET bundle.

d(1) = s(1)[0] + s(2)[3] + s(8)[3] + s(12)[3] = 0.5 + 0.2 + 0.1 + 0.1

The bfb identical result for this sum was calculated and stored in variable `sumC` above.

```
! forced srcTermProcessing
srcTermProcessing=0

call ESMF_ArraySMMStore(srcArray, dstArray, &
  factorIndexList=factorIndexList, factorList=factorList, &
  routehandle=rh, srcTermProcessing=srcTermProcessing, rc=rc)


call ESMF_ArraySMM(srcArray, dstArray, routehandle=rh, &
  termorderflag=ESMF_TERMORDER_SRCPET, rc=rc)


if (localPet == 0) then
  print *, "result SRCPET#8 = ", farrayPtr(1), " expect: ", sumC
  if (farrayPtr(1) /= sumC) &
    finalrc = ESMF_FAILURE
endif
```

Setting the `srcTermProcessing` argument to a value of 2 results in the following source term grouping:

d(1) = s(1)[0] + (s(2)[3] + s(8)[3]) + s(12)[3] = 0.5 + (0.2 + 0.1) + 0.1,

where the (0.2 + 0.1) partial sum is carried out on source PET 3, and then sent to the destination PET (PET 0), together with the unmodified data from source element 8 (0.1). The final sum is performed on PET 0. The result is identical to the precomputed value stored in `sumD`. The numbers work out in a way where this result is bfb identical to the previous result, i.e. `sumC`. However, this bfb match is purely coincidental.

```
! forced srcTermProcessing
srcTermProcessing=2

call ESMF_ArraySMMStore(srcArray, dstArray, &
  factorIndexList=factorIndexList, factorList=factorList, &
  routehandle=rh, srcTermProcessing=srcTermProcessing, rc=rc)


call ESMF_ArraySMM(srcArray, dstArray, routehandle=rh, &
  termorderflag=ESMF_TERMORDER_SRCPET, rc=rc)


if (localPet == 0) then
  print *, "result SRCPET#9 = ", farrayPtr(1), " expect: ", sumD
  if (farrayPtr(1) /= sumD) &
    finalrc = ESMF_FAILURE
endif
```

Increasing the `srcTermProcessing` argument up to 3 results in a three term partial sum on PET 3:

d(1) = s(1)[0] + (s(2)[3] + s(8)[3] + s(12)[3]) = 0.5 + (0.2 + 0.1 + 0.1).

Again the final sum is performed on PET 0. The result is bfb identical to the number stored in `sumE`, which, for the chosen numbers, works out to have a bfb difference compared to `sumC` and `sumD`.

```
! forced srcTermProcessing
srcTermProcessing=3

call ESMF_ArraySMMStore(srcArray, dstArray, &
  factorIndexList=factorIndexList, factorList=factorList, &
  routehandle=rh, srcTermProcessing=srcTermProcessing, rc=rc)


call ESMF_ArraySMM(srcArray, dstArray, routehandle=rh, &
  termorderflag=ESMF_TERMORDER_SRCPET, rc=rc)


if (localPet == 0) then
  print *, "result SRCPET#10 = ", farrayPtr(1), " expect: ", sumE
  if (farrayPtr(1) /= sumE) &
    finalrc = ESMF_FAILURE
endif
```

Reproducibility and Performance

The above examples show how bit-for-bit (bfb) reproducibility is a result of controlling the term order. ESMF offers several options to control the term order in the sparse matrix multiplication (SMM) implementation:

- To guarantee bfb reproducibility between consecutive executions of the same RouteHandle object, the `ESMF_TERMORDER_SRCPET` execution-time option suffices.
- If bfb reproducibility is required between *different* RouteHandles, e.g. a RouteHandle that is precomputed each time the application starts, then it must be further ensured that the same value of `srcTermProcessing` is specified during the store call. Under these conditions the ESMF SMM implementation guarantees bfb identical results between runs, as long as the number of PETs does not change.
- To guarantee bfb reproducibility between different runs, even when the number of PETs, and therefore the data distribution changes, the execution option `ESMF_TERMORDER_SRCSEQ` must be chosen together with `srcTermProcessing` equal to 0 or 1 (in order to prevent partial sums).

The term order in a SMM operation does not only affect the bfb reproducibility of the result, but also affects the SMM *performance*. The precise performance implications of a specific term order are complicated and strongly depend on the exact problem structure, as well as on the details of the compute hardware. ESMF implements an auto-tuning mechanism that can be used to conveniently determine a close to optimal set of SMM performance parameters.

There are two SMM performance parameters in ESMF that are encoded into a RouteHandle during store-time: `srcTermProcessing` and `pipelineDepth`. The first one affects the term order in the SMM sums and has been discussed in detail above. The second parameter, `pipelineDepth`, determines how many in- and out-bound messages may be outstanding on each PET. It has no effect on the term order and does not lead to bfb differences in the SMM results. However, in order to achieve good performance reproducibility, the user has the option to pass in a fixed value of the `pipelineDepth` argument when precomputing RouteHandles.

Store calls that take the `srcTermProcessing` and/or `pipelineDepth` argument specify them as `optional` with `intent(inout)`. Omitting the argument when calling, or passing a variable that is set to a negative number, indicates that the respective parameter needs to be determined by the library. Further, if a variable with a negative value was passed in, then the variable is overwritten and replaced by the auto-tuned value on return. Through this mechanism a user can leverage the built-in auto-tuning feature of ESMF to obtain the best possible performance for a specific problem on a particular compute hardware, while still ensuring bfb and performance reproducibility between runs. The following example shows code that first checks if previously stored SMM performance parameters are available in a file on disk, and then either reads and uses them, or else uses auto-tuning to determine the parameters before writing them to file. For simplicity the same sparse matrix as in the previous example is used.

```
! precondition the arguments for auto-tuning and overwriting
srcTermProcessing = -1  ! init negative value
pipelineDepth     = -1  ! init negative value

! get a free Fortran i/o unit
call ESMF_UtilIOUnitGet(unit=iounit, rc=rc)

! try to open the file that holds the SMM parameters
open(unit=iounit, file="smmParameters.dat", status="old", action="read", &
  form="unformatted", iostat=iostat)

if (iostat == 0) then
  ! the file was present -> read from it and close it again
  read(unit=iounit, iostat=iostat) srcTermProcessing, pipelineDepth, &
    sumCompare
  close(unit=iounit)
endif

if ((localPet == 0) .and. (iostat == 0)) then
  print *, "SMM parameters successfully read from file"
  print *, " srcTermProcessing=", srcTermProcessing, " pipelineDepth=", &
    pipelineDepth, " ==>> sumCompare=", sumCompare
endif

call ESMF_ArraySMMStore(srcArray, dstArray, &
  factorIndexList=factorIndexList, factorList=factorList, &
  routehandle=rh, srcTermProcessing=srcTermProcessing, &
  pipelineDepth=pipelineDepth, rc=rc)

call ESMF_ArraySMM(srcArray, dstArray, routehandle=rh, &
  termorderflag=ESMF_TERMORDER_SRCPET, rc=rc)

if ((localPet == 0) .and. (iostat /= 0)) then
  print *, "SMM parameters determined via auto-tuning -> dump to file"
  open(unit=iounit, file="smmParameters.dat", status="unknown", &
    action="write", form="unformatted")
  write(unit=iounit) srcTermProcessing, pipelineDepth, farrayPtr(1)
  close(unit=iounit)
endif

if (localPet == 0) then
  if (iostat /= 0) then
    ! cannot do bfb comparison of the result without reference
    print *, "result SRCPET#11 = ", farrayPtr(1)
  else
    ! do bfb comparison of the result against reference
    print *, "result SRCPET#11 = ", farrayPtr(1), " expect: ", sumCompare
    if (farrayPtr(1) /= sumCompare) then
      finalrc = ESMF_FAILURE
      write (msg, *) "Numerical difference detected: ", &
        farrayPtr(1)-sumCompare
      call ESMF_LogWrite(msg, ESMF_LOGMSG_INFO)
    endif
  endif
endif
```

Running this example for the first time exercises the auto-tuning branch. The auto-tuned `srcTermProcessing` and `pipelineDepth` parameters are then used in the SMM execution, as well as written to file. The SMM result variable is also written to the same file for test purposes. Any subsequent execution of the same example branches into the code that reads the previously determined SMM execution parameters from file, re-using them during store-time. This ensures bfb reproducibility of the SMM result, which is tested in this example by comparing to the previously stored value.

38.2.2 Asynchronous RouteHandle communication with VMEpoch

The RouteHandle based communication calls of the Array and Field classes provide the `routesyncflag` argument. This argument allows the user to specify that the initiated call should not block. Additional calls are necessary to wait for a previously initiated communication call to finish. For a detailed discussion see section 29.2.20. Building on these primitives, asynchronous communications patterns can be implemented in user code. However, a more elegant option to achive asynchronous behavior between sending and receiving PETs of RouteHandle based communications is provided by the VMEpoch feature discussed here.

The VMEpoch is a low level message aggregation and buffering approach. The VM level details are discussed under the ESMF_VM section in 52.3.12.

There are several advantages of VMEpoch over the direct use of non-blocking RouteHandle based communication calls:

- Multiple different RouteHandles can be aggregated within the same epoch. This allows mixing of Redist(), Regrid(), and SMM() operations, and the aggregating of all messages.
- The *same* RouteHandle can be used several times within the same epoch. This is not possible under the direct non-blocking execution.
- ArrayBundle and FieldBundle communications are supported. This is not available for the direct non-blocking execution.

The `ESMF_VMEpoch` API consists of two interfaces: `ESMF_VMEpochEnter()` and `ESMF_VMEpochExit()`. Inside an epoch, communication calls are aggregated. Data transfers on the `src` side are not issued until the epoch is exited. On the `dst` side, a single data transfer is received from any of the sending PETs, and then divided over the individual receive calls.

In the following code example, the `srcArray` has DEs on PET 0 and 1, while `dstArray` has DEs on PET 2 and 3. Both Arrays are operating on the same global index space. A Redist() RouteHandle `rh` is created in the usual manner.

```
call ESMF_ArrayRedistStore(srcArray, dstArray, routehandle=rh, rc=rc)
```

The precomputed `rh` can be used as usual. Here the use inside an active VMEpoch is demonstrated.

First enter the VMEpoch using `ESMF_VMEpochEnter()`, specifying the kind of epoch. Currently only a single VMEpoch kind is available: `ESMF_VMEPOCH_BUFFER`.

```
call ESMF_VMEpochEnter(epoch=ESMF_VMEPOCH_BUFFER, rc=rc)
```

SRC side (PET 0 & 1): The sending PETs do not block.

DST side (PET 2 & 3): The receiving PETs do not block.

Notice that ESMF implements a throttle on the VMEpoch as to limit the number of queued message between PETs. This is necessary to protect the receiving side in the `EAGER` regime where MPI implementations send the data from

the sending to the receiving side, assuming the receiving side will always be able to buffer. In cases where the sending side runs far ahead of the receiving side, this strategy can lead to increasing memory pressure on the receiving side, ultimatily resulting in out-of-memory conditions. The default throttle in VMEpoch is set to 10 outstanding message between any two PETs. It can be adjusted by specifying the `throttle` argument when calling `ESMF_VMEpochEnter()`.

Next the actual communication method, `ESMF_ArrayRedist()`, is called in the usual manner.

```
call ESMF_ArrayRedist(srcArray, dstArray, routehandle=rh, rc=rc)
```

SRC side (PET 0 & 1): The sending PETs block until the locally needed send buffers are available, and all local data manipulations and data movements into the send buffers have completed.

Waiting for the send buffers comes into play when a VMEpoch is entered and exited multiple times. The same send buffer is reused each time for the same src-dst-PET pairs (and grown automatically if needed). Each send buffer becomes available once the MPI layer has indicated that the associated, previous `MPI_Isend()` has completed locally.

Once the send buffer for a specific PET pair is available, the local data movements defined by the `rh` and message aggregation must complete before returning. For `Regrid()` and `SMM()` operations the `srcTermProcessing` argument specified during `Store()` determines the amount of local data processing. Once returned, it is safe to modify the `srcArray` data on the local PET.

DST side (PET 2 & 3): The receiving PETs block on the aggregated data from the src side for which the local PET has a dependency defined via the `rh`. Once received, the data is processed locally, and moved into the final location under the `dstArray`. On return, it is safe to access the data in `dstArray` on the local PET.

Notice that any number of RouteHandle based communication calls can be made inside the same active VMEpoch. In fact, aggregating messages from multiple exchanges is the typical use case of the VMEpoch approach. Additional communication calls cam either involve different RouteHandles, or even the same `rh` for different src/dst Array pairs.

When using communication calls that allow the specification of the `termorderflag`, e.g. `ESMF_FieldRegrid()`, `ESMF_ArraySMM()`, etc. inside a VMEpoch, it is important to set it to either `ESMF_TERMORDER_SRCPET` or `ESMF_TERMORDER_SRCSEQ`. The default value of `ESMF_TERMORDER_FREE` is *not* compatible with VMEpoch.

Finally the active VMEpoch is exited by calling `ESMF_VMEpochExit()`.

```
call ESMF_VMEpochExit(rc=rc)
```

SRC side (PET 0 & 1): The sending PETs post their local `MPI_Isend()` calls. This is non-blocking.

DST side (PET 2 & 3): The receiving PETs do not block.

As part of the final clean-up the `rh` is being released as usual.

```
call ESMF_ArrayRedistRelease(routehandle=rh, rc=rc)
```

38.2.3 Creating a RouteHandle from an existing RouteHandle – Transfer to a different set of PETs

Typically a RouteHandle object is created indirectly, i.e. without explicitly calling the `ESMF_RouteHandleCreate()` method. The RouteHandle object is a byproduct of calling communication Store() methods like `ESMF_FieldRegridStore()`.

One exception to this rule is when creating a duplicate RouteHandle from an existing RouteHandle object. In this case the `ESMF_RouteHandleCreate()` method is used explicitly. While this method allows to create a duplicate

RouteHandle on the exact same set of PETs as the original RouteHandle, the real purpose of duplication is the transfer of a precomputed RouteHandle to a different set of PETs. This is an efficient way to reduce the total time spent in Store() calls, for situations where the same communication pattern repeats for multiple components.

This example demonstrates the transfer of a RouteHandle from one set of PETs to another by first introducing three components. Component A is defined on the first half of available PETs.

```
petCountA = petCount/2  ! component A gets half the PETs

allocate(petListA(petCountA))
do i=1, petCountA
  petListA(i) = i-1 ! PETs are base 0
enddo

compA = ESMF_GridCompCreate(petList=petListA, rc=rc)
if (ESMF_LogFoundError(rcToCheck=rc, msg=ESMF_LOGERR_PASSTHRU, &
  line=__LINE__, &
  file=__FILE__)) &
  call ESMF_Finalize(endflag=ESMF_END_ABORT)
```

The other two components, B1 and B2, split the remaining PETs evenly.

```
petCountR = petCount - petCountA
petCountB1 = petCountR / 2

allocate(petListB1(petCountB1))
do i=1, petCountB1
  petListB1(i) = petCountA + i-1 ! PETs are base 0
enddo

allocate(petListB2(petCountR-petCountB1))
do i=1, petCountR-petCountB1
  petListB2(i) = petCountA + petCountB1 + i-1 ! PETs are base 0
enddo

compB1 = ESMF_GridCompCreate(petList=petListB1, rc=rc)
if (ESMF_LogFoundError(rcToCheck=rc, msg=ESMF_LOGERR_PASSTHRU, &
  line=__LINE__, &
  file=__FILE__)) &
  call ESMF_Finalize(endflag=ESMF_END_ABORT)

compB2 = ESMF_GridCompCreate(petList=petListB2, rc=rc)
if (ESMF_LogFoundError(rcToCheck=rc, msg=ESMF_LOGERR_PASSTHRU, &
  line=__LINE__, &
  file=__FILE__)) &
  call ESMF_Finalize(endflag=ESMF_END_ABORT)
```

Skipping all of the standard superstructure code, assume that `fieldA` has been created by component A, has been reconciled across all PETs via a StateReconcile() call, and accessed via a StateGet(). The same is true for `fieldB1` and `fieldB2` from components B1 and B2, respectively.

Now the RouteHandle `rh1` for a Redist operation is precomputed between `fieldA` and `fieldB1`.

```
call ESMF_FieldRedistStore(srcField=fieldA, dstField=fieldB1, &
```

```
    routehandle=rh1, rc=rc)
  if (ESMF_LogFoundError(rcToCheck=rc, msg=ESMF_LOGERR_PASSTHRU, &
    line=__LINE__, &
    file=__FILE__)) &
    call ESMF_Finalize(endflag=ESMF_END_ABORT)
```

The communication pattern stored in `rh1` is between the PETs associated with component A and those associated with component B1. Now component B2 is simply a second instance of the same component code as B1, but on a different set of PETs. The `ESMF_RouteHandleCreate()` method can be used to transfer `rh1` to the set of PETs that is consistent with fieldA to fieldB2 communication.

In order to transfer a RouteHandle to a different set of PETs, the `originPetList` and `targetPetList` must be constructed. The `originPetList` is the union of source and destination PETs (in that order) for which `rh1` was explicitly computed via the Store() call:

```
  allocate(originPetList(size(petListA)+size(petListB1)))
  originPetList(1:size(petListA)) = petListA(:)
  originPetList(size(petListA)+1:) = petListB1(:)
```

The `targetPetList` is the union of source and destination PETs (in that order) for which the target RouteHandle (i.e. `rh2`) will be defined:

```
  allocate(targetPetList(size(petListA)+size(petListB2)))
  targetPetList(1:size(petListA)) = petListA(:)
  targetPetList(size(petListA)+1:) = petListB2(:)
```

Now the new RouteHandle `rh2` can be created easily from the exising RouteHandle `rh1`, suppling the origin and target petLists.

```
  rh2 = ESMF_RouteHandleCreate(rh1, originPetList=originPetList, &
    targetPetList=targetPetList, rc=rc)
  if (ESMF_LogFoundError(rcToCheck=rc, msg=ESMF_LOGERR_PASSTHRU, &
    line=__LINE__, &
    file=__FILE__)) &
    call ESMF_Finalize(endflag=ESMF_END_ABORT)
```

The new RouteHandle `rh2` is completely independent of the original RouteHandle. In fact, it is perfectly fine to destroy (or release) `rh1` while holding on to `rh2`.

```
  call ESMF_RouteHandleDestroy(rh1, noGarbage=.true., rc=rc)
  if (ESMF_LogFoundError(rcToCheck=rc, msg=ESMF_LOGERR_PASSTHRU, &
    line=__LINE__, &
    file=__FILE__)) &
    call ESMF_Finalize(endflag=ESMF_END_ABORT)
```

Finally the `rh2` object can be used to redistribute data from `fieldA` to `fieldB2`.

```
  call ESMF_FieldRedist(srcField=fieldA, dstField=fieldB2, &
    routehandle=rh2, rc=rc)
  if (ESMF_LogFoundError(rcToCheck=rc, msg=ESMF_LOGERR_PASSTHRU, &
    line=__LINE__, &
    file=__FILE__)) &
    call ESMF_Finalize(endflag=ESMF_END_ABORT)
```

The communication pattern held by rh2 is idential to what whould have been created by an explicit ESMF_FieldRedistStore() call. However, the ESMF_RouteHandleCreate() call used to create rh2 from rh1 is much faster than the full RedistStore() operation.

38.2.4 Write a RouteHandle to file and creating a RouteHandle from file

Communication Store() methods, like ESMF_FieldRegridStore(), are used to create RouteHandles. These methods can be expensive, both with respect to temporary memory requirements as well as the time they require to execute. Often the associated cost is acceptable because Store() calls are typically used during the initialization phase of the application. The cost of RouteHandle generation is therefore armorized over the entire run phase of the application, where the RouteHandle is applied over and over to transfer data according to the same communication pattern.

However, especially for short production runs, an expensive initialization time can become problematic. In such cases it is useful to write the RouteHandle to file. Subsequent application runs can then re-create the RouteHandle during initialization, simply from file at a fraction of the time of the original Store() call.

First a RouteHandle must be created using one of the ESMF Store() methods.

```
call ESMF_FieldRedistStore(srcField=fieldA, dstField=fieldB, &
  routehandle=rh1, rc=rc)
```

Now the RouteHandle object rh1 can be written to file using the *collective* ESMF_RouteHandleWrite() method.

```
call ESMF_RouteHandleWrite(rh1, fileName="testWrite.RH", rc=rc)
```

This creates a single binary file with name testWrite.RH. The information from across all PETs that define rh1 is contained in this file.

At this point, the original RouteHandle is no longer needed and can be destroyed.

```
call ESMF_RouteHandleDestroy(rh1, noGarbage=.true., rc=rc)
```

The RouteHandle just deleted can easily be re-created using the ESMF_RouteHandleCreate() method that accepts the file name as an argument. This is a *collective* method that must be called on exactly the same number of PETs that was used for the original Store() and Write() calls that generated the file.

```
rh2 = ESMF_RouteHandleCreate(fileName="testWrite.RH", rc=rc)
```

Finally the re-created RouteHandle, rh2, can be used to execute the communication pattern originally computed in rh1.

```
call ESMF_FieldRedist(srcField=fieldA, dstField=fieldB, &
  routehandle=rh2, rc=rc)
```

Once done with rh2, the RouteHandle can be destroyed as usual.

```
call ESMF_RouteHandleDestroy(rh2, noGarbage=.true., rc=rc)
```

38.2.5 Reusablity of RouteHandles and interleaved distributed and undistributed dimensions

A RouteHandle object is typically created during a communication `Store()` call, e.g. an `ESMF_FieldRegridStore()`. Other communication methods with `Store()` are `Halo`, `Redist`, and `SMM`. The primary input objects of a `Store()` call are either Fields, Arrays, FieldBundles, or ArrayBundles. There will be an object for the source side, and another object for the destination side. Both objects must be of the same type.

```
srcField = ESMF_FieldCreate(srcGrid, ESMF_TYPEKIND_R8, rc=rc)

dstField = ESMF_FieldCreate(dstGrid, ESMF_TYPEKIND_R8, rc=rc)

call ESMF_FieldRegridStore(srcField=srcField, dstField=dstField, &
  routehandle=routehandle, rc=rc)
```

The purpose of the explicit `Store()` call is to separate out the expensive part of creating the RouteHandle object for a specific communication patter, from the less expensive part of applying it. Applying the RouteHandle results in data movement between the source and destination objects. Once a RouteHandle is available, it is reusable. This means it can be applied over and over again to communicate data from the source to the destination object.

```
do i=1, 10
  ! repeatedly applying the routehandle
  call ESMF_FieldRegrid(srcField=srcField, dstField=dstField, &
    routehandle=routehandle, rc=rc)
enddo
```

Reusability of a RouteHandle object extends beyond re-applying it to the same source/destination object pair that was used during `Store()`. The same RouteHandle can be applied to a different object pair, as long as these criterial are met:

- The new pair matches the original pair with respect to *type*, and *kind*.
- The memory layout of the *distributed* (i.e. *gridded*) dimensions of the new pair is congruent with the original pair. This means the *DistGrid*s must match, as well as any extra padding on the distributed/gridded dimensions.
- Size, number, and position (i.e. index order) of potentially present *undistributed* (i.e. *ungridded*) dimensions does not affect the reusability of a RouteHandle.

The following examples will discuss in detail what this means in practice.

First consider the case where a second pair of source and destination Fields is created identical to the first set. The precomputed RouteHandle is immediatly reusable for this new Field pair to carry out the regrid operation.

```
srcField2 = ESMF_FieldCreate(srcGrid, ESMF_TYPEKIND_R8, rc=rc)

dstField2 = ESMF_FieldCreate(dstGrid, ESMF_TYPEKIND_R8, rc=rc)

! applying the same routehandle to a different pair of fields
call ESMF_FieldRegrid(srcField=srcField2, dstField=dstField2, &
  routehandle=routehandle, rc=rc)
```

The same RouteHandle stays re-usable even for a Field pair where source and destination have one or more additional undistributed dimensions. Here a single undistributed dimension is added. By default all undistributed dimensions will be ordered *after* the distributed dimensions provided by the Grid object.

```
srcField3 = ESMF_FieldCreate(srcGrid, ESMF_TYPEKIND_R8, &
  ungriddedLBound=(/1/), ungriddedUBound=(/10/), &  ! undistributed dim last
  rc=rc)

dstField3 = ESMF_FieldCreate(dstGrid, ESMF_TYPEKIND_R8, &
  ungriddedLBound=(/1/), ungriddedUBound=(/10/), & ! undistributed dim last
  rc=rc)

! applying the same routehandle to a different pair of fields
call ESMF_FieldRegrid(srcField=srcField3, dstField=dstField3, &
  routehandle=routehandle, rc=rc)
```

The undistributed dimension can also be moved into the first position, and the same RouteHandle can still be re-used. Specifying the order of dimensions in a Field is accomplished by providing the `gridToFieldMap`. Here the Grid dimensions are mapped to 2nd and 3rd Field dimensions, moving the undistributed dimension into the leading position.

```
srcField4 = ESMF_FieldCreate(srcGrid, ESMF_TYPEKIND_R8, &
  ungriddedLBound=(/1/), ungriddedUBound=(/10/), &
  gridToFieldMap=(/2,3/), rc=rc)  ! undistributed dim 1st

dstField4 = ESMF_FieldCreate(dstGrid, ESMF_TYPEKIND_R8, &
  ungriddedLBound=(/1/), ungriddedUBound=(/10/), &
  gridToFieldMap=(/2,3/), rc=rc)  ! undistributed dim 1st

! applying the same routehandle to a different pair of fields
call ESMF_FieldRegrid(srcField=srcField4, dstField=dstField4, &
  routehandle=routehandle, rc=rc)
```

It is not necessary that the undistributed dimension is in the same position on the source and destination Field. The only criteria that needs to be satisfied is that both source and destination have the *same number* of undistributed elements. Here the RouteHandle is re-used for a Field pair where the destination Field interleaves the undistributed dimension between the two distributed dimensions. At the same time the source Field keeps the undistributed dimension in leading position.

```
srcField5 = ESMF_FieldCreate(srcGrid, ESMF_TYPEKIND_R8, &
  ungriddedLBound=(/1/), ungriddedUBound=(/10/), &
  gridToFieldMap=(/2,3/), rc=rc)  ! undistributed dim 1st

dstField5 = ESMF_FieldCreate(dstGrid, ESMF_TYPEKIND_R8, &
  ungriddedLBound=(/1/), ungriddedUBound=(/10/), &
  gridToFieldMap=(/1,3/), rc=rc)  ! undistributed dim 2nd

! applying the same routehandle to a different pair of fields
call ESMF_FieldRegrid(srcField=srcField5, dstField=dstField5, &
  routehandle=routehandle, rc=rc)
```

In the following example the undistributed elements on the source side are spread across two undistributed dimensions. Of course the product of the two dimension sizes must equal the number of undistributed elements on the destination side, in order to fulfil the element count criteria. Here this number is 10. At two undistributed dimension on the source side are placed in first and fourth position using the `gridToFieldMap`. The same RouteHandle is applied to this Field pair, resulting in the desired regrid operation.

```
srcField6 = ESMF_FieldCreate(srcGrid, ESMF_TYPEKIND_R8, &
  ungriddedLBound=(/1,1/), ungriddedUBound=(/2,5/), &
  gridToFieldMap=(/2,3/), rc=rc)  ! undistributed dims 1st and 4th

dstField6 = ESMF_FieldCreate(dstGrid, ESMF_TYPEKIND_R8, &
  ungriddedLBound=(/1/), ungriddedUBound=(/10/), &
  gridToFieldMap=(/1,3/), rc=rc)  ! undistributed dim 2nd

! applying the same routehandle to a different pair of fields
call ESMF_FieldRegrid(srcField=srcField6, dstField=dstField6, &
  routehandle=routehandle, rc=rc)
```

While the RouteHandle was precomputed using a specific source/destination Field pair, we have seen how it can be re-used as long as the memory layout associated with the distributed (i.e. gridded) dimensions does not change. A natural extension of this feature is to allow the same RouteHandle to be re-used when source and destination are FieldBundles instead of Fields. The only requirement here is that both sides contain the same number of elements, and that each pair constructed from the source and destination side is compatible with the original pair used as shown in the examples above. Here this criteria is simply met by constructing the source and destination FieldBundles from the exact Fields used in the previous examples.

```
srcFieldBundle = ESMF_FieldBundleCreate(fieldList=(/srcField, &
  srcField2, srcField3, srcField4, srcField5, srcField6/), rc=rc)

dstFieldBundle = ESMF_FieldBundleCreate(fieldList=(/dstField, &
  dstField2, dstField3, dstField4, dstField5, dstField6/), rc=rc)

! applying the same routehandle to a pair of FieldBundles
call ESMF_FieldBundleRegrid(srcFieldBundle, dstFieldBundle, &
  routehandle=routehandle, rc=rc)
```

On a fundamental level, RouteHandles are re-usable across objects that have the same memory layout for their distributed dimensions. Since ESMF Fields are built on top of ESMF Arrays, it is possible to re-use the same RouteHandle that was precomputed for a Field pair and apply it to a matching Array pair.

For this example, the easiest way to create Arrays with the same memory layout in the distributed dimensions is to query the source and destination Grid objects for their DistGrids. Then source and destination Arrays can be easily constructed.

```
call ESMF_GridGet(srcGrid, distgrid=srcDistGrid, rc=rc)

call ESMF_GridGet(dstGrid, distgrid=dstDistGrid, rc=rc)

srcArray = ESMF_ArrayCreate(srcDistGrid, ESMF_TYPEKIND_R8, rc=rc)

dstArray = ESMF_ArrayCreate(dstDistGrid, ESMF_TYPEKIND_R8, rc=rc)
```

```
! applying the same routehandle to an Array pair
call ESMF_ArraySMM(srcArray=srcArray, dstArray=dstArray, &
  routehandle=routehandle, rc=rc)
```

Finally the resources associated with the RouteHandle object are released. The recommended way to do this is by calling into the `Release()` method associated with the `Store()` method used to create the RouteHandle.

```
call ESMF_FieldRegridRelease(routehandle, rc=rc)
```

38.2.6 Dynamic Masking

When a RouteHandle object is created during an `ESMF_FieldRegridStore()` call, masking information can be provided by the user. This type of masking is said to be *static*, and is described in section 25.2.10. It is static, because the masks set the maximum limits of the regrid operation, which cannot be changed later. All subsequent executions of the same RouteHandle can only use elements - source or destination - that were not masked during the Store() call.

Once a RouteHandle object is available, whether it was created with or without static masking, the associated regrid operation can further be masking during RouteHandle execution . This is called *dynamic* masking, because it can dynamically change between subsequent RouteHandle executions. The RouteHandle itself remains unchange during this process. The dynamic masking information is processed on the fly as the RouteHandle is applied.

The following example demonstrates dynamic masking for a regrid operation between two Field objects. Although it is supported, here the regrid operation between `srcField` and `dstField` is computed without static masking.

Note that since the intention is to later use the generated RouteHandle for dynamic masking, it is important to provide the `srcTermProcessing` argument, which must be set equal to 0. Doing this ensures that all of the multiplying with interpolation weights, and summing of terms, is carried out on the destination side. This is critical for dynamic masking.

```
srcTermProcessing=0

call ESMF_FieldRegridStore(srcField=srcField, dstField=dstField, &
  srcTermProcessing=srcTermProcessing, routehandle=routehandle, rc=rc)
```

Now that `routehandle` is available, it can be used to execute the regrid operation over and over during the course of the simualtion run.

```
call ESMF_FieldRegrid(srcField=srcField, dstField=dstField, &
  routehandle=routehandle, rc=rc)
```

Assume that during the course of the simulation the `srcField` becomes partially masked. This masking may be dynamically changing, as would be the case for the ice cover over the arctic ocean. Then the regrid operation represented by `routehandle` should dynamically adjust to only use unmasked source elements.

The dynamic masking behavior can be achieved in ESMF by setting `srcField` elements to a special value.

```
call ESMF_FieldGet(srcField, farrayPtr=farrayPtr, rc=rc)

! setting an arbitrary local source element to special value 'srcMaskValue'
farrayPtr(lbound(farrayPtr,1)+3,lbound(farrayPtr,2)+3) = srcMaskValue
```

Then set up an ESMF_DynamicMask object that holds information about the special mask value. The dynamic mask object further holds a pointer to the routine that will be called in order to handle dynamically masked elements.

```
call ESMF_DynamicMaskSetR8R8R8(dynamicMask, &
  dynamicSrcMaskValue=srcMaskValue, &
  dynamicMaskRoutine=simpleDynMaskProc, &
  rc=rc)
```

The names of the specific DynamicMaskSet methods all carry a typekind-triplet suffix. Here the suffix is R8R8R8. This indicates that the dynamicMaskRoutine argument provided is expected to deal with real(ESMF_KIND_R8) destination data (first R8 typekind), real(ESMF_KIND_R8) factors (second R8 typekind), and real(ESMF_KIND_R8) source data (third R8 typekind).

Now when the routehandle is executed, and the dynamicMask object is passed into the ESMF_FieldRegrid() call,

```
call ESMF_FieldRegrid(srcField=srcField, dstField=dstField, &
  routehandle=routehandle, dynamicMask=dynamicMask, rc=rc)
```

ESMF will scan the srcField for elements that have data equal to that set by dynamicSrcMaskValue. If any are found, they are passed into the routine provided via the dynamicMaskRoutine argument.

The procedure passed through the dynamicMaskRoutine argument must satisfy exactly the following predefined interface:

```
interface
  subroutine ESMF_DynamicMaskRoutineR8R8R8(dynMaskList, &
    dynamicSrcMaskValue, dynamicDstMaskValue, rc)
    use ESMF_UtilTypesMod
    implicit none
    type(ESMF_DynamicMaskElementR8R8R8), pointer        :: dynMaskList(:)
    real(ESMF_KIND_R8),            intent(in), optional :: dynamicSrcMaskValue
    real(ESMF_KIND_R8),            intent(in), optional :: dynamicDstMaskValue
    integer,                       intent(out)  :: rc
  end subroutine
end interface
```

The first argument accepted according to this interface is an array of type ESMF_DynamicMaskElement. Each element of this array corresponds to a single element in the dstField that is affected by dynamic masking. For each such dstElement the complete interpolation stencile is provided by the ESMF_DynamicMaskElement derived type:

```
type ESMF_DynamicMaskElementR8R8R8
  real(ESMF_KIND_R8), pointer       :: dstElement
  real(ESMF_KIND_R8), allocatable   :: factor(:)
  real(ESMF_KIND_R8), allocatable   :: srcElement(:)
end type
```

Here the dstElement is a pointer to the actual element in the dstField. Thus, assigning dstElement to a value, immediately results in a value change of the element inside the dstField object. Further, the size of the factor(:) and srcElement(:) arrays is identical to each other and corresponds to the number of source

elements in the interpolation stencile. Without dynamic masking, the `dstElement` would simply be calculated as the scalar product of `factor(:)` and `srcElement(:)`.

By providing the `dynamicMaskRoutine`, the user has full control as to what exactly happens to destination elements that are affected by dynamic masking. For the current example, where some source elements may be marked by a special masking value, a simple scheme could be to only use non-masked source elements to calculate destination elements. The result then needs to be renormalized in order to account for the missing source elements. This could be implemented similar to the following subroutine:

```
subroutine simpleDynMaskProc(dynamicMaskList, dynamicSrcMaskValue, &
  dynamicDstMaskValue, rc)
  type(ESMF_DynamicMaskElementR8R8R8), pointer        :: dynamicMaskList(:)
  real(ESMF_KIND_R8),            intent(in), optional :: dynamicSrcMaskValue
  real(ESMF_KIND_R8),            intent(in), optional :: dynamicDstMaskValue
  integer,                       intent(out)          :: rc
  integer :: i, j
  real(ESMF_KIND_R8)  :: renorm
  if (associated(dynamicMaskList)) then
    do i=1, size(dynamicMaskList)
      dynamicMaskList(i)%dstElement = 0.d0 ! set to zero
      renorm = 0.d0 ! reset
      do j=1, size(dynamicMaskList(i)%factor)
        if (.not. &
          match(dynamicSrcMaskValue,dynamicMaskList(i)%srcElement(j))) then
          dynamicMaskList(i)%dstElement = dynamicMaskList(i)%dstElement &
            + dynamicMaskList(i)%factor(j) &
            * dynamicMaskList(i)%srcElement(j)
          renorm = renorm + dynamicMaskList(i)%factor(j)
        endif
      enddo
      if (renorm > 0.d0) then
        dynamicMaskList(i)%dstElement = dynamicMaskList(i)%dstElement / renorm
      else if (present(dynamicSrcMaskValue)) then
        dynamicMaskList(i)%dstElement = dynamicSrcMaskValue
      else
        rc = ESMF_RC_ARG_BAD  ! error detected
        return
      endif
    enddo
  endif
  ! return successfully
  rc = ESMF_SUCCESS
end subroutine
```

So far in the example only the `srcField` had been dynamically masked. However, elements in the `dstField` can be masked as well, following exactly the same manner.

First ensure that the `dstField` is in a well defined condition. This can be achived by reseting it, e.g. to zero, using the `ESMF_FieldFill()` method.

```
call ESMF_FieldFill(dstField, dataFillScheme="const", const1=0.d0, rc=rc)
```

Now some of the destination elements are set to a defined masking value.

```
call ESMF_FieldGet(dstField, farrayPtr=farrayPtr, rc=rc)

! setting an arbitrary local destination element to special value 'dstMaskValue'
farrayPtr(lbound(farrayPtr,1)+1,lbound(farrayPtr,2)+1) = dstMaskValue
```

The `dynamicMask` is reset using the same `DynamicMaskSet` method as before, but in addition to the previous arguments, `dynamicDstMaskValue` is also specified.

```
call ESMF_DynamicMaskSetR8R8R8(dynamicMask, &
  dynamicSrcMaskValue=srcMaskValue, &
  dynamicDstMaskValue=dstMaskValue, &
  dynamicMaskRoutine=simpleDynMaskProc, &
  rc=rc)
```

Passing the reset `dynamicMask` object into `ESMF_FieldRegrid()` causes ESMF to not only look for source elements that match `dynamicSrcMaskValue`, but also destination elements that match `dynamicDstMaskValue`.

```
call ESMF_FieldRegrid(srcField=srcField, dstField=dstField, &
  routehandle=routehandle, zeroregion=ESMF_REGION_EMPTY, &
  dynamicMask=dynamicMask, rc=rc)
```

Again an adequate procedure is supplied through `dynamicMaskRoutine`. For the current case, however, a suitable procedure would be inspecting the `dstElement` as well as all the `dstElements` provided via the `dynMaskList` argument.

Notice the `zeroregion = ESMF_REGION_EMPTY` specification in the `ESMF_FieldRegrid()` call. This setting ensures that values in the `dstField` remain unchanged until they are checked for `dynamicDstMaskValue`.

The `DynamicMaskSet` methods provide an argument of `logical` type, called `handleAllElements`. By default it is set to `.false.`, which means that only elements affected by dynamic masking – as described above – are passed to the `dynamicMaskRoutine`. However, when `handleAllElements` is set to `.true.`, *all* local elements on each PET are made available to the `dynamicMaskRoutine`. This allows the user supplied procedure to implement fully customized handling of the interpolation from source to destination, using the information supplied by ESMF.

To demonstrate this, a custom routine `simpleHandleAllProc()` is passed in as `dynamicMaskRoutine`, and `handleAllElements` is set to `.true.`. All other aspects of the user interface remain unchanged.

```
call ESMF_DynamicMaskSetR8R8R8(dynamicMask, &
  dynamicSrcMaskValue=srcMaskValue, &
  dynamicDstMaskValue=-2.d0, &
  dynamicMaskRoutine=simpleHandleAllProc, &
  handleAllElements=.true., &
  rc=rc)

call ESMF_FieldRegrid(srcField=srcField, dstField=dstField, &
  routehandle=routehandle, zeroregion=ESMF_REGION_EMPTY, &
  dynamicMask=dynamicMask, rc=rc)
```

Dynamic masking is also available for source and destination fields that contain leading undistributed dimensions. When ESMF applies the regridding weights, it interprets the product space of leading undistributed dimensions of a Field or Array as the elements of a vector. In this approach the interpolation becomes a vector operation. When applying the concept of dynamic masking to such a vector operation, without making further assumptions, it must be

assumed that different vector elements may be affected differently by the dynamic mask. ESMF therefore unrolls the vector dimension when constructing the information passed to the `dynamicMaskRoutine`. As a consequence of this, masking routines do not generally have to consider vectorization explicitly.

The concept is demonstrated by creating source and destination fields with one leading undistributed dimension.

```
srcField = ESMF_FieldCreate(srcGrid, ESMF_TYPEKIND_R8, &
  gridToFieldMap=(/2,3/), ungriddedLBound=(/1/), ungriddedUBound=(/20/), &
  rc=rc)

dstField = ESMF_FieldCreate(dstGrid, ESMF_TYPEKIND_R8, &
  gridToFieldMap=(/2,3/), ungriddedLBound=(/1/), ungriddedUBound=(/20/), &
  rc=rc)
```

A regrid operation is computed in the usual manner. In order to make the resulting RouteHandle object suitable for dynamic masking, computations are pushed completely onto the destination PETs, as in previous examples, by setting the `srcTermProcessing` argument to zero.

```
srcTermProcessing=0

call ESMF_FieldRegridStore(srcField=srcField, dstField=dstField, &
  srcTermProcessing=srcTermProcessing, routehandle=routehandle, rc=rc)
```

The same `dynamicMaskRoutine` as before can be used when setting up the `ESMF_DynamicMask` object. However, the source and destination Fields now contain 20 undistributed elements at each distributed location, and the dynamic mask routine will handle all elements that are affected by the dynamic mask conditions.

```
call ESMF_DynamicMaskSetR8R8R8(dynamicMask, &
  dynamicSrcMaskValue=srcMaskValue, &
  dynamicDstMaskValue=dstMaskValue, &
  dynamicMaskRoutine=simpleDynMaskProc, &
  rc=rc)

call ESMF_FieldRegrid(srcField=srcField, dstField=dstField, &
  routehandle=routehandle, zeroregion=ESMF_REGION_EMPTY, &
  dynamicMask=dynamicMask, rc=rc)
```

Setting the `handleAllElements` to `.true.` will pass all elements to the `dynamicMaskRoutine`. There are 20 times as many elements on the source and destination side, and therefore the dynamic masking routine will handle exactly 20 times as many elements compared to the case without undistributed dimension.

```
call ESMF_DynamicMaskSetR8R8R8(dynamicMask, &
  dynamicSrcMaskValue=srcMaskValue, &
  dynamicDstMaskValue=-2.d0, &
  dynamicMaskRoutine=simpleHandleAllProc, &
  handleAllElements=.true., &
  rc=rc)

call ESMF_FieldRegrid(srcField=srcField, dstField=dstField, &
  routehandle=routehandle, zeroregion=ESMF_REGION_EMPTY, &
  dynamicMask=dynamicMask, rc=rc)
```

For the case with `handleAllElements=.true.`, where the entire vector of undistributed elements is passed to `dynamicMaskRoutine` at every distributed location, an alternative implementation option exists for the dynamic masking routine. In some cases this alternative may result in more efficient code because it allows to vectorize over the undistributed elements when summing up the interpolation terms. The alternative interface for `dynamicMaskRoutine` is:

```
interface
  subroutine ESMF_DynamicMaskRoutineR8R8R8V(dynMaskList, &
    dynamicSrcMaskValue, dynamicDstMaskValue, rc)
    use ESMF_UtilTypesMod
    implicit none
    type(ESMF_DynamicMaskElementR8R8R8V), pointer       :: dynMaskList(:)
    real(ESMF_KIND_R8),            intent(in), optional :: dynamicSrcMaskValue
    real(ESMF_KIND_R8),            intent(in), optional :: dynamicDstMaskValue
    integer,                       intent(out)  :: rc
  end subroutine
end interface
```

The difference compared to the previously used interface is that the first argument now is of type `ESMF_DynamicMaskElementR8R8R8V`. This type is declared as follows:

```
type ESMF_DynamicMaskElementR8R8R8V
  real(ESMF_KIND_R8), pointer       :: dstElement(:)
  real(ESMF_KIND_R8), allocatable   :: factor(:)
  type(ESMF_PtrR8D1), allocatable   :: srcElement(:)
end type
```

Here `size(dstElement)` for every element in `dynMaskList` is identical to the vector size, i.e. the number of undistributed elements to be handled. The same is true for `size(srcElement(j)%ptr))`, for every element `j` of the interpolation stencile.

```
call ESMF_DynamicMaskSetR8R8R8V(dynamicMask, &
  dynamicSrcMaskValue=srcMaskValue, &
  dynamicDstMaskValue=-2.d0, &
  dynamicMaskRoutine=simpleHandleAllProcV, &
  handleAllElements=.true., &
  rc=rc)

call ESMF_FieldRegrid(srcField=srcField, dstField=dstField, &
  routehandle=routehandle, zeroregion=ESMF_REGION_EMPTY, &
  dynamicMask=dynamicMask, rc=rc)
```

Applying dynamic masking to source and destination fields of other typekind than R8 only requires that the correct `DynamicMaskSet` method is chosen. Here we create `real(ESMF_KIND_R4)` source and destination fields.

```
srcField = ESMF_FieldCreate(srcGrid, ESMF_TYPEKIND_R4, rc=rc)

dstField = ESMF_FieldCreate(dstGrid, ESMF_TYPEKIND_R4, rc=rc)
```

Computing a suitable RouteHandle is unchanged.

```
srcTermProcessing=0

call ESMF_FieldRegridStore(srcField=srcField, dstField=dstField, &
  srcTermProcessing=srcTermProcessing, routehandle=routehandle, rc=rc)
```

Now setting some source and destination elements to defined special values of the correct typekind.

```
call ESMF_FieldGet(srcField, farrayPtr=farrayPtrR4, rc=rc)

farrayPtrR4(lbound(farrayPtrR4,1)+3,lbound(farrayPtrR4,2)+3) = srcMaskValueR4

call ESMF_FieldFill(dstField, dataFillScheme="const", const1=0.d0, rc=rc)

call ESMF_FieldGet(dstField, farrayPtr=farrayPtrR4, rc=rc)

farrayPtrR4(lbound(farrayPtrR4,1)+1,lbound(farrayPtrR4,2)+1) = dstMaskValueR4
```

Setting up the `ESMF_DynamicMask` object is practically the same as before, just that the correct typekind-triplet suffix for the `DynamicMaskSet` method must be selected, indicating that the destination data is of typekind R4, the factors are still of typekind R8, and the source data is of typekind R4.

```
call ESMF_DynamicMaskSetR4R8R4(dynamicMask, &
  dynamicSrcMaskValue=srcMaskValueR4, &
  dynamicDstMaskValue=dstMaskValueR4, &
  dynamicMaskRoutine=simpleDynMaskProcR4R8R4, &
  rc=rc)
```

Finally calling into `ESMF_FieldRegrid()` with the `dynamicMask` object is unchanged.

```
call ESMF_FieldRegrid(srcField=srcField, dstField=dstField, &
  routehandle=routehandle, zeroregion=ESMF_REGION_EMPTY, &
  dynamicMask=dynamicMask, rc=rc)
```

38.3 Restrictions and Future Work

- **Non-blocking** communication via the `routesyncflag` option is implemented for Fields and Arrays. It is *not* available for FieldBundles and ArrayBundles. The user is advised to use the VMEpoch approach for all cases to achive asynchronicity.
- The **dynamic masking** feature currently has the following limitations:
  - Only available for `ESMF_TYPEKIND_R8` and `ESMF_TYPEKIND_R4` Fields and Arrays.
  - Only available through the `ESMF_FieldRegrid()` and `ESMF_ArraySMM()` methods.
  - Destination objects that have undistributed dimensions *after* any distributed dimension are not supported.
  - No check is implemented that ensure the user-provided RouteHandle object is suitable for dynamic masking.

38.4 Design and Implementation Notes

Internally all route-based communication calls are implemented as sparse matrix multiplications. The precompute step for all of the supported communication methods can be broken up into three steps:

1. Construction of the sparse matrix for the specific communication method.
2. Generation of the communication pattern according to the sparse matrix.
3. Encoding of the communication pattern for each participating PET in form of an XXE stream.

38.5 Class API

38.5.1 ESMF_RouteHandleCreate - Create a new RouteHandle from RouteHandle

INTERFACE:

```
! Private name; call using ESMF_RouteHandleCreate()
function ESMF_RouteHandleCreateRH(routehandle, &
  originPetList, targetPetList, rc)
```

RETURN VALUE:

```
type(ESMF_RouteHandle) :: ESMF_RouteHandleCreateRH
```

ARGUMENTS:

```
     type(ESMF_RouteHandle), intent(in)            :: routehandle
 -- The following arguments require argument keyword syntax (e.g. rc=rc). --
     integer,                intent(in),  optional :: originPetList(:)
     integer,                intent(in),  optional :: targetPetList(:)
     integer,                intent(out), optional :: rc
```

DESCRIPTION:

Create a new `ESMF_RouteHandle` object from and existing RouteHandle. The new RouteHandle can be created to function on a different petList than the incoming RouteHandle.

The arguments are:

routehandle The RouteHandle object to be duplicated.

[originPetList] The petList on which the incoming `routehandle` is defined to operate. If present, then `targetPetList` must also be present and of the same size. The petLists are used to map origin PETs to target PETs. By convention the petLists are constructed to first list the PETs of the source component, followed by the PETs of the destination component. Defaults, to the petList of the current component context, meaning that the PETs in the RouteHandle are not modified.

[targetPetList] The petList on which the newly created RouteHandle is defined to operate. If present, then `originPetList` must also be present and of the same size. The petLists are used to map origin PETs to target PETs. By convention the petLists are constructed to first list the PETs of the source component, followed by the PETs of the destination component. Defaults, to the petList of the current component context, meaning that the PETs in the RouteHandle are not modified.

[rc] Return code; equals `ESMF_SUCCESS` if there are no errors.

38.5.2 ESMF_RouteHandleCreate - Create a new RouteHandle from file

INTERFACE:

```
! Private name; call using ESMF_RouteHandleCreate()
function ESMF_RouteHandleCreateFile(fileName, rc)
```

RETURN VALUE:

```
type(ESMF_RouteHandle) :: ESMF_RouteHandleCreateFile
```

ARGUMENTS:

```
    character(*),           intent(in)            :: fileName
 -- The following arguments require argument keyword syntax (e.g. rc=rc). --
    integer,                intent(out), optional :: rc
```

DESCRIPTION:

Create a new `ESMF_RouteHandle` object from a file. This method must be called from a VM context that holds exactly as many PETs as were used when generating the file.

The arguments are:

fileName The name of the RouteHandle file to be read in.

[rc] Return code; equals `ESMF_SUCCESS` if there are no errors.

38.5.3 ESMF_RouteHandleDestroy - Release resources associated with a RouteHandle

INTERFACE:

```
subroutine ESMF_RouteHandleDestroy(routehandle, &
  noGarbage, rc)
```

ARGUMENTS:

```
    type(ESMF_RouteHandle), intent(inout)          :: routehandle
 -- The following arguments require argument keyword syntax (e.g. rc=rc). --
    logical,                intent(in),   optional :: noGarbage
    integer,                intent(out),  optional :: rc
```

DESCRIPTION:

Destroys an `ESMF_RouteHandle`, releasing the resources associated with the object.

The arguments are:

routehandle The `ESMF_RouteHandle` to be destroyed.

[noGarbage] If set to `.TRUE.` the object will be fully destroyed and removed from the ESMF garbage collection system. Note however that under this condition ESMF cannot protect against accessing the destroyed object through dangling aliases – a situation which may lead to hard to debug application crashes.

It is generally recommended to leave the `noGarbage` argument set to `.FALSE.` (the default), and to take advantage of the ESMF garbage collection system which will prevent problems with dangling aliases or incorrect sequences of destroy calls. However this level of support requires that a small remnant of the object is kept in memory past the destroy call. This can lead to an unexpected increase in memory consumption over the course of execution in applications that use temporary ESMF objects. For situations where the repeated creation and destruction of temporary objects leads to memory issues, it is recommended to call with `noGarbage` set to `.TRUE.`, fully removing the entire temporary object from memory.

[rc] Return code; equals `ESMF_SUCCESS` if there are no errors.

38.5.4 ESMF_RouteHandleGet - Get values from a RouteHandle

INTERFACE:

```
! Private name; call using ESMF_RouteHandleGet()
subroutine ESMF_RouteHandleGetP(routehandle, name, vm, rc)
```

ARGUMENTS:

```
     type(ESMF_RouteHandle), intent(in)            :: routehandle
 -- The following arguments require argument keyword syntax (e.g. rc=rc). --
     character(len=*),       intent(out), optional :: name
     type(ESMF_VM),          intent(out), optional :: vm
     integer,                intent(out), optional :: rc
```

DESCRIPTION:

Returns information about an `ESMF_RouteHandle`.

The arguments are:

routehandle `ESMF_RouteHandle` to be queried.

[name] Name of the RouteHandle object.

[vm The VM on which the RouteHandle object was created.

[rc] Return code; equals `ESMF_SUCCESS` if there are no errors.

38.5.5 ESMF_RouteHandleIsCreated - Check whether a RouteHandle object has been created

INTERFACE:

```
function ESMF_RouteHandleIsCreated(routehandle, rc)
```

RETURN VALUE:

```
logical :: ESMF_RouteHandleIsCreated
```

ARGUMENTS:

```
     type(ESMF_RouteHandle), intent(in)            :: routehandle
 -- The following arguments require argument keyword syntax (e.g. rc=rc). --
     integer,                intent(out), optional :: rc
```

DESCRIPTION:

Return `.true.` if the `routehandle` has been created. Otherwise return `.false.`. If an error occurs, i.e. `rc /= ESMF_SUCCESS` is returned, the return value of the function will also be `.false.`.

The arguments are:

routehandle `ESMF_RouteHandle` queried.

[rc] Return code; equals `ESMF_SUCCESS` if there are no errors.

38.5.6 ESMF_RouteHandleSet - Set values in a RouteHandle

INTERFACE:

```
! Private name; call using ESMF_RouteHandleSet()
subroutine ESMF_RouteHandleSetP(routehandle, name, rc)
```

ARGUMENTS:

```
     type(ESMF_RouteHandle), intent(inout)         :: routehandle
 -- The following arguments require argument keyword syntax (e.g. rc=rc). --
     character(len = *),     intent(in),  optional :: name
     integer,                intent(out), optional :: rc
```

DESCRIPTION:

Set an `ESMF_RouteHandle` attribute with the given value.

The arguments are:

routehandle `ESMF_RouteHandle` to be modified.

[name] The RouteHandle name.

[rc] Return code; equals `ESMF_SUCCESS` if there are no errors.

38.5.7 ESMF_RouteHandleWrite - Write the RouteHandle to file

INTERFACE:

```
subroutine ESMF_RouteHandleWrite(routehandle, fileName, rc)
```

ARGUMENTS:

```
     type(ESMF_RouteHandle), intent(inout)         :: routehandle
     character(*),           intent(in)            :: fileName
 -- The following arguments require argument keyword syntax (e.g. rc=rc). --
     integer,                intent(out), optional :: rc
```

DESCRIPTION:

Write the RouteHandle to file. The generated file can then be used to re-create the same RouteHandle, on the same number of PETs, using the `ESMF_RouteHandleCreate(fileName=...)` method.

The arguments are:

routehandle The `ESMF_RouteHandle` to be written.

fileName The name of the output file to which the RouteHandle is written.

[rc] Return code; equals `ESMF_SUCCESS` if there are no errors.

39 I/O Capability

39.1 Description

The ESMF I/O provides a unified interface for input and output of high level ESMF objects such as Fields. ESMF I/O capability is integrated with third-party software such as Parallel I/O (PIO) to read and write Fortran array data in NetCDF format, and JSON for Modern C++ Library to read Info attribute data in JSON format. Other file I/O functionalities, such as writing of error and log messages, input of configuration parameters from an ASCII file, and lower-level I/O utilities are covered in different sections of this document. See the Log Class 50.1, the Config Class 48.1, and the Fortran I/O Utilities, 54.1 respectively.

39.2 Data I/O

ESMF provides interfaces for high performance, parallel I/O using ESMF data objects such as Arrays and Fields. Currently ESMF only supports I/O of NetCDF files. The current ESMF implementation relies on the Parallel I/O (PIO) library developed as a collaboration between NCAR and DOE laboratories. PIO is built as part of the ESMF build when the environment variable ESMF_PIO is set to "internal", or is linked against when ESMF_PIO is set to "external"; by default ESMF_PIO is not set (which results in using the internal PIO if other aspects of the ESMF build configuration allow it). When PIO is built with ESMF, the ESMF methods internally call the PIO interfaces. When ESMF is not built with PIO, the ESMF methods are non-operable (no-op) stubs that simply return with a return code of ESMF_RC_LIB_NOT_PRESENT. Details about the environment variables can be found in ESMF User Guide, "Building and Installing the ESMF", "Third Party Libraries".

The following methods support parallel data I/O using PIO:

`ESMF_FieldBundleRead()`, section 26.5.19.

`ESMF_FieldBundleWrite()`, section 26.5.39.

`ESMF_FieldRead()`, section 27.6.64.

`ESMF_FieldWrite()`, section 27.6.86.

`ESMF_ArrayBundleRead()`, section 28.5.17.

`ESMF_ArrayBundleWrite()`, section 28.5.28.

`ESMF_ArrayRead()`, section 29.5.28.

`ESMF_ArrayWrite()`, section 29.5.48.

39.3 Data formats

The only format currently supported is NetCDF. The environment variables ESMF_NETCDF and/or ESMF_PNETCDF must be set to enable this NetCDF-based I/O. Details about the environment variables can be found in ESMF User Guide, "Building and Installing the ESMF", "Third Party Libraries".

NetCDF Network Common Data Form (NetCDF) is an interface for array-oriented data access. The NetCDF library provides an implementation of the interface. It also defines a machine-independent format for representing scientific data. Together, the interface, library, and format support the creation, access, and sharing of scientific

data. The NetCDF software was developed at the Unidata Program Center in Boulder, Colorado. See [16]. In geoscience, NetCDF can be naturally used to represent fields defined on logically rectangular grids. NetCDF use in geosciences is specified by CF conventions mentioned above [15].

To the extent that data on unstructured grids (or even observations) can be represented as one-dimensional arrays, NetCDF can also be used to store these data. However, it does not provide a high-level abstraction for this type of data.

39.4 Restrictions and Future Work

1. **Limited data formats supported.** Currently a small fraction of the anticipated data formats is implemented by ESMF. The data I/O uses NetCDF format, and ESMF Info I/O uses JSON format. Different libraries are employed for these different formats. In future development, a more centralized I/O technique will likely be defined to provide efficient utilities with a set of standard APIs that will allow manipulation of multiple standard formats. Also, the ability to automatically detect file formats at runtime will be developed.

2. **Some limitations with multi-tile I/O.** There are a few limitations when doing I/O on multi-tile Arrays and Fields (e.g., a cubed sphere grid represented as a six-tile grid): This I/O requires at least as many PETs as there are tiles, and for I/O of ArrayBundles and FieldBundles, all Arrays / Fields in the bundle must contain the same number of tiles.

3. **Replicated dimensions.** I/O of Arrays / Fields with replicated dimensions (section 29.2.12) is only partially working. In most situations, replicated dimensions appear as dimensions in the output file; ideally, these replicated dimensions would be removed in the output file, and we plan to make that change in the future. Furthermore, slices of the replicated dimensions other than the first can have garbage values in the output file. In addition, there is an inconsistency when outputting Arrays / Fields that have a decomposition with more than one DE per PET: in this case, replicated dimensions are removed in the output file. Finally, I/O cannot be performed on multi-tile Arrays / Fields with replicated dimensions.

39.5 Design and Implementation Notes

For data I/O, the ESMF I/O capability relies on the PIO and NetCDF libraries, and optionally the PNetCDF library. For Info attribute I/O, the ESMF I/O capability uses the JSON for Modern C++ library to perform reading of JSON files. PIO and JSON for Modern C++ are included with the ESMF distribution; the other libraries must be installed on the machine of interest.

Part V

Infrastructure: Utilities

40 Overview of Infrastructure Utility Classes

The ESMF utilities are a set of tools for quickly assembling modeling applications.

The ESMF Info class enables models to be self-describing via metadata, which are instances of JSON-compatible key-value pairs.

The Time Management Library provides utilities for time and time interval representation and calculation, and higher-level utilities that control model time stepping, via clocks, as well as alarming.

The ESMF Config class provides configuration management based on NASA DAO's Inpak package, a collection of methods for accessing files containing input parameters stored in an ASCII format.

The ESMF LogErr class consists of a variety of methods for writing error, warning, and informational messages to log files. A default Log is created during ESMF initialization. Other Logs can be created later in the code by the user.

The DELayout class provides a layer of abstraction on top of the Virtual Machine (VM) layer. DELayout does this by introducing DEs (Decomposition Elements) as logical resource units. The DELayout object keeps track of the relationship between its DEs and the resources of the associated VM object. A DELayout can be shaped by the user at creation time to best match the computational problem or other design criteria.

The ESMF VM (Virtual Machine) class is a generic representation of hardware and system software resources. There is exactly one VM object per ESMF Component, providing the execution environment for the Component code. The VM class handles all resource management tasks for the Component class and provides a description of the underlying configuration of the compute resources used by a Component. In addition to resource description and management, the VM class offers the lowest level of ESMF communication methods.

The ESMF Fortran I/O utilities provide portable methods to access capabilities which are often implemented in different ways amongst different environments. Currently, two utility methods are implemented: one to find an unopened unit number, and one to flush an I/O buffer.

41 Info Class (Object Attributes)

All ESMF base objects (i.e. Array, ArrayBundle, Field, FieldBundle, Grid, Mesh, DistGrid) contain a key-value attribute storage object called `ESMF_Info`. `ESMF_Info` objects may also be created independent of a base object. `ESMF_Info` supports setting and getting key-value pairs where the *key* is a string and the *value* is a scalar or a list of common data types. An `ESMF_Info` object may have a flat or nested data structure. The purpose of `ESMF_Info` is to support I/O-compatible metadata structures (i.e. netCDF), internal record-keeping for model execution (NUOPC), and provide a mechanism for custom user metadata attributes.

`ESMF_Info` is designed for interoperability. To achieve this goal, `ESMF_Info` adopted the JSON (Javascript Object Notation) specification. Internally, `ESMF_Info` uses *JSON for Modern C++* [1] to manage its storage map. There are numerous resources for JSON on the web [11]. Quoting from the *json.org* site [11] when it introduces the format:

> *JSON (JavaScript Object Notation) is a lightweight data-interchange format. It is easy for humans to read and write. It is easy for machines to parse and generate. It is based on a subset of the JavaScript Programming Language Standard ECMA-262 3rd Edition - December 1999. JSON is a text format that is completely language independent but uses conventions that are familiar to programmers of the C-family of languages, including C, C++, C#, Java, JavaScript, Perl, Python, and many others. These properties make JSON an ideal data-interchange language. JSON is built on two structures:*
>
> - *A collection of name/value pairs. In various languages, this is realized as an object, record, struct, dictionary, hash table, keyed list, or associative array.*
> - *An ordered list of values. In most languages, this is realized as an array, vector, list, or sequence.*
>
> *These are universal data structures. Virtually all modern programming languages support them in one form or another. It makes sense that a data format that is interchangeable with programming languages also be based on these structures.*

By adopting JSON compliance for `ESMF_Info`, ESMF made its core metadata capabilities explicitly interoperable with a widely used data structure. If data may be represented with JSON, then it is compatible with `ESMF_Info`.

There are some aspects of the `ESMF_Info` implementation related to JSON and JSON for Modern C++ that should be noted:

1. JSON supports 64-bit data types for integers and reals ([3], [2]). I4/R4 is converted to I8/R8 and vice versa. `ESMF_Info` internally tracks 32-bit sets to ensure the data type may be appropriately queried.
2. The memory overhead per JSON object (e.g. a key-value pair) requires an additional allocator pointer for type generalization [6]. Hence, the JSON map is not suited for big data storage, offering flexibility in exchange.
3. Keys are stored in an unordered map sorted in lexicographical order.

41.1 Migrating from Attribute

The `ESMF_Info` class is a replacement for the `ESMF_Attribute` class and is the preferred way of managing metadata attributes in ESMF moving forward. It is recommended that users migrate existing `ESMF_Attribute` calls to the new `ESMF_Info` API. The `ESMF_Info` class provides the backend for `ESMF_Attribute` since ESMF version 8.1. The `ESMF_Attribute` docs are located in appendix 58. In practice, users should experience no friction when migrating client code. Please email ESMF support in the case of a migration issue. Some structural changes to `ESMF_Attribute` did occur:

- Changed behavior when getting fixed-size lists. List size in storage must match the size of the outgoing list.
- Removed ability to use a default value with list gets.
- Removed `attPackInstanceName` from all interfaces.
- Removed `attcopyFlag` from all interfaces.
- Removed `ESMF_Attribute`-managed object linking.
- Modified `ESMF_AttributeAdd` to set the target key to a null JSON value.
- Modified `ESMF_AttributeSet` to not require an attribute added to an `ESMF_AttPack` be added through `ESMF_AttributeAdd` before setting.
- Removed support for attribute XML I/O.
- Removed ability to add multiple nested Attribute packages.
- Removed retrieval of "internal" ESMF object Attributes.

Below are examples for setting and getting an attribute using `ESMF_Info` and the legacy `ESMF_Attribute`. The `ESMF_Info` interfaces are not overloaded for ESMF object types but rather work off a handle retrieved via a get call.

41.1.1 Setting an Attribute

With `ESMF_Attribute`:

```
call ESMF_AttributeSet(array, "aKey", 15, rc=rc)
```

With `ESMF_Info`:

```
call ESMF_InfoGetFromHost(array, info, rc=rc)
call ESMF_InfoSet(info, "aKey", 15, rc=rc)
```

Notice that the legacy `ESMF_Attribute` API expects the usage of what was called an "Attribute Package". This essentially corresponds to a namespace similar to what `ESMF_Info` provides for keys via the JSON Pointer syntax (see 41.2). In the above `ESMF_AttributeSet()` call, without specification of `convention` and `purpose` arguments, the resulting JSON pointer of the key is "/ESMF/General/aKey". This is important to account for when mixing deprecated `ESMF_Attribute` calls with the `ESMF_Info` API.

41.1.2 Getting an Attribute

With `ESMF_Attribute`:

```
call ESMF_AttributeGet(array, "aKey", aKeyValue, rc=rc)
```

With `ESMF_Info`:

```
call ESMF_InfoGetFromHost(array, info, rc=rc)
call ESMF_InfoGet(info, "aKey", aKeyValue, rc=rc)
```

Notice again that the `ESMF_Attribute` API automatically prepends "/ESMF/General/" to the JSON pointer used for key in the absence of `convention` and `purpose` arguments.

41.2 Key Format Overview

A key in the `ESMF_Info` interface provides the location of a value to retrieve from the key-value storage. Keys in the `ESMF_Info` class use the JSON Pointer syntax [5]. A forward slash is prepended to string keys if it does not exist. Hence, `"aKey"` and `"/aKey"` are equivalent. Note the indexing aspect of the JSON Pointer syntax is not supported.

Some examples for valid "key" arguments:

- `altitude` :: A simple key argument with no nesting.
- `/altitude` :: A simple key argument with no nesting with the prepended pointer forward slash.
- `/altitude/height_above_mean_sea_level` :: A key for an attribute "height_above_mean_sea_level" nested in a map identified with key "altitude".

41.3 Usage and Examples

41.3.1 Retrieve an Info Handle

This example demonstrates how to retrieve an `ESMF_Info` object handle from an ESMF object. `ESMF_Info` handles are a view into the object's `ESMF_Info` storage and should ***not*** be created/destroyed as the `ESMF_Info`'s lifetime is determined by its host object's lifetime. Destroying the host object will leave a handle in an undefined state.

Variable declarations:

```
type(ESMF_DistGrid) :: distgrid
type(ESMF_Array) :: array
type(ESMF_Info) :: infoh
real(ESMF_KIND_R8), dimension(10,10) :: farray
integer :: rc
```

Create an ESMF Array.

```
distgrid = ESMF_DistGridCreate(minIndex=(/1,1/), maxIndex=(/10,10/), rc=rc)

array = ESMF_ArrayCreate(distgrid, farray, indexflag=ESMF_INDEX_DELOCAL, rc=rc)
```

Get the `ESMF_Info` handle from the object. See example 41.3.2 for additional usage examples.

```
call ESMF_InfoGetFromHost(array, infoh, rc=rc)
```

Destroy everything except the `ESMF_Info` object. Attempting to destroy the `ESMF_Info` handle will result in an error.

```
call ESMF_ArrayDestroy(array, rc=rc)

call ESMF_DistGridDestroy(distgrid, rc=rc)
```

41.3.2 General Usage Examples

General usage examples for the `ESMF_Info` class. The demonstrated capabilities are:

- Creating an `ESMF_Info` object.
- Setting/getting a key-value pair.
- Setting/getting a list value and a list value by index.
- Printing and dumping `ESMF_Info` contents.
- Checking for key presence and set state (null value check).
- Setting/getting with nesting (hierarchies).
- Inquiring the `ESMF_Info` object for general item metadata and iteration purposes.
- Copying `ESMF_Info` contents.
- Removing a key-value pair from the `ESMF_Info` storage.
- Destroying the `ESMF_Info` object.

Variable declarations:

```
type(ESMF_Info) :: info, infoCopy, infoFromCh
type(ESMF_TypeKind_Flag) :: typekind
character(len=ESMF_MAXSTR) :: ikey
character(:), allocatable :: output, getCh
real(ESMF_KIND_R8), dimension(4) :: realList
real(ESMF_KIND_R8), dimension(:), allocatable :: realListAlloc
integer(ESMF_KIND_I4) :: getInt
real(ESMF_KIND_R8) :: getReal
integer :: rc, infoSize, ii
logical :: isPresent, isSet
```

Create an `ESMF_Info` object. This object contains an empty key-value store called a JSON object [8].

An `ESMF_Info` handle may also be retrieved from an ESMF object as opposed to creating a standalone `ESMF_Info` object. See example 41.3.1.

```
info = ESMF_InfoCreate(rc=rc)
```

Add an integer value.

```
call ESMF_InfoSet(info, "myIntegerKey", 54, rc=rc)
```

Get the integer value we just set.

```
call ESMF_InfoGet(info, "myIntegerKey", getInt, rc=rc)
```

Set a list of reals.

```
call ESMF_InfoSet(info, "myListOfReals", (/ 33.3, 44.4, 0.0, 99.0 /), rc=rc)
```

Set an index in the new list then retrieve the value.

```
call ESMF_InfoSet(info, "myListOfReals", 1234.0, idx=3, rc=rc)

call ESMF_InfoGet(info, "myListOfReals", getReal, idx=3, rc=rc)
```

Get the values from a list.

```
call ESMF_InfoGet(info, "myListOfReals", realList, rc=rc)
```

Allocatable lists may be used through a specific interface.

```
call ESMF_InfoGetAlloc(info, "myListOfReals", realListAlloc, rc=rc)
```

The storage contents may be printed directly or dumped to a character.

```
call ESMF_InfoPrint(info, indent=4, rc=rc)

output = ESMF_InfoDump(info, rc=rc)

print *, "the Info dump: "//output
```

Check if a key is present.

```
isPresent = ESMF_InfoIsPresent(info, "myIntegerKey", rc=rc)

if (.not. isPresent) call ESMF_Finalize(endflag=ESMF_END_ABORT)
```

Add a null value and check if it is set (has a non-null value).

```
call ESMF_InfoSetNULL(info, "aNullKey", rc=rc)

isSet = ESMF_InfoIsSet(info, "aNullKey", rc=rc)

if (isSet) call ESMF_Finalize(endflag=ESMF_END_ABORT)

isSet = ESMF_InfoIsSet(info, "myIntegerKey", rc=rc)

if (.not. isSet) call ESMF_Finalize(endflag=ESMF_END_ABORT)
```

The force flag, when set to false, will cause an error if the key exists in the map. The force flag is set to true by default.

```
call ESMF_InfoSet(info, "myIntegerKey", 33, force=.false., rc=rc)
if (rc .ne. ESMC_RC_CANNOT_SET) call ESMF_Finalize(endflag=ESMF_END_ABORT)
```

Nesting uses the JSON Pointer 41.2 syntax. All key arguments in `ESMF_Info` may use this syntax unless noted otherwise. When creating a nested object, objects are created if they do not exist. Hence, it is not necessary to create the individual nested elements for deep hierarchies.

```
call ESMF_InfoSet(info, "/Universe/Galaxy/Star/Planet", "Venus", rc=rc)
```

Using the get interface, it is possible to iterate over the storage contents. In the call below, we are retrieving the number of elements (key-value pairs) that exist in our root storage object. We then select the target element in root using an index and retrieve some additional metadata for the target object.

```
call ESMF_InfoGet(info, size=infoSize, rc=rc)

do ii=1,infoSize
  call ESMF_InfoGet(info, idx=ii, ikey=ikey, typekind=typekind, rc=rc)


  if (localPet == 0) then
    print *, "ESMF_Info inquire loop: "
    print *, "       idx= ", ii
    print *, "      ikey= ", trim(ikey)
    print *, "  typekind= ", typekind
  endif
enddo
```

Copying the `ESMF_Info` object requires the copy to be destroyed/deallocated.

```
infoCopy = ESMF_InfoCreate(info, rc=rc)
```

Comparison operators = and /= are implemented for `ESMF_Info` objects.

```
if (infoCopy /= info) call ESMF_Finalize(endflag=ESMF_END_ABORT)
```

After removing a key from the copied `ESMF_Info` object, the two objects will no longer be equal.

```
call ESMF_InfoRemove(infoCopy, "myIntegerKey", rc=rc)

if (infoCopy == info) call ESMF_Finalize(endflag=ESMF_END_ABORT)
```

Destroy the copied object.

```
call ESMF_InfoDestroy(infoCopy, rc=rc)
```

An `ESMF_Info` object may be created from a JSON string. Note the usage of quotes is required as below.

```
infoFromCh = ESMF_InfoCreate('{"hello":"world"}', rc=rc)
```

The contents of an `ESMF_Info` object may be set in another `ESMF_Info` object.

```
call ESMF_InfoSet(info, "infoFromCh", infoFromCh, rc=rc)

call ESMF_InfoDestroy(infoFromCh, rc=rc)
```

An allocatable character get interface is available.

```
call ESMF_InfoGetCharAlloc(info, "/infoFromCh/hello", getCh, rc=rc)
```

Destroy the `ESMF_Info` object.

```
call ESMF_InfoDestroy(info, rc=rc)
```

41.4 Class API

41.4.1 ESMF_InfoAssignment(=) - Info assignment

INTERFACE:

```
interface assignment(=)
info1 = info2
```

ARGUMENTS:

```
type(ESMF_Info) :: info1
type(ESMF_Info) :: info2
```

STATUS:

- This interface is backward compatible with ESMF versions starting at 5.2.0r. If code using this interface compiles with any version of ESMF starting with 5.2.0r, then it will compile with the current version.

DESCRIPTION:

Assign info1 as an alias to the same ESMF Info object in memory as info2. If info2 is invalid, then info1 will be equally invalid after the assignment.

The arguments are:

info1 The `ESMF_Info` object on the left hand side of the assignment.

info2 The `ESMF_Info` object on the right hand side of the assignment.

41.4.2 ESMF_InfoOperator(==) - Info equality operator

INTERFACE:

```
interface operator(==)
```

RETURN VALUE:

```
logical :: result
```

ARGUMENTS:

```
type(ESMF_Info), intent(in) :: info1
type(ESMF_Info), intent(in) :: info2
```

DESCRIPTION:

Test if the contents of two `ESMF_Info` objects are equal.

The arguments are:

info1 The `ESMF_Info` object on the left hand side of the operation.

info1 The `ESMF_Info` object on the right hand side of the operation.

41.4.3 ESMF_InfoOperator(/=) - Info not equal operator

INTERFACE:

```
interface operator(/=)
```

RETURN VALUE:

```
logical :: result
```

ARGUMENTS:

```
type(ESMF_Info), intent(in) :: info1
type(ESMF_Info), intent(in) :: info2
```

DESCRIPTION:

Test if the contents of two `ESMF_Info` objects are not equal.

The arguments are:

info1 The `ESMF_Info` object on the left hand side of the operation.

info1 The `ESMF_Info` object on the right hand side of the operation.

41.4.4 ESMF_InfoBroadcast - Broadcast Info contents

INTERFACE:

```
subroutine ESMF_InfoBroadcast(info, rootPet, rc)
```

ARGUMENTS:

```
  type(ESMF_Info), intent(inout) :: info
  integer, intent(in) :: rootPet
-- The following arguments require argument keyword syntax (e.g. rc=rc). --
  integer, intent(out), optional :: rc
```

DESCRIPTION:

Broadcast an `ESMF_Info` object collectively across the current VM.

Users wishing to synchronize via broadcast an attribute hierarchy associated with an ESMF object should consult the `ESMF_InfoSync` documentation 41.4.30

The arguments are:

info The `ESMF_Info` object that is the source (on *rootPet*) or the destination object to populate (on all other PETs). On destination PETs, the structure of *info* is overwritten with data from *rootPet*.

rootPet The root PET identifier.

[rc] Return code; equals `ESMF_SUCCESS` if there are no errors.

41.4.5 ESMF_InfoCreate - Create a new Info object

INTERFACE:

```
  ! Private name; call using ESMF_InfoCreate()
function ESMF_InfoCreateEmpty(rc)
```

ARGUMENTS:

```
  integer, intent(out), optional :: rc
```

RETURN VALUE:

```
  type(ESMF_Info) :: ESMF_InfoCreateEmpty
```

DESCRIPTION:

Create an `ESMF_Info` object. This object must be destroyed using `ESMF_InfoDestroy` to free its memory allocation

The arguments are:

[rc] Return code; equals `ESMF_SUCCESS` if there are no errors.

41.4.6 ESMF_InfoCreate - Create a new Info object using a key

INTERFACE:

```
   ! Private name; call using ESMF_InfoCreate()
 function ESMF_InfoCreateByKey(info, key, rc)
```

ARGUMENTS:

```
   type(ESMF_Info), intent(in) :: info
   character(len=*), intent(in) :: key
 -- The following arguments require argument keyword syntax (e.g. rc=rc). --
   integer, intent(out), optional :: rc
```

RETURN VALUE:

```
   type(ESMF_Info) :: ESMF_InfoCreateByKey
```

DESCRIPTION:

Create an `ESMF_Info` object from a location in *info* defined by *key*. Returned object is a deep copy. The value associated with `key` must be a nested object (i.e. a collection of key/value pairs).

The arguments are:

info The `ESMF_Info` object providing source data.

key String key to access in `ESMF_Info` storage. See section 41.2 for an overview of the key format.

[rc] Return code; equals `ESMF_SUCCESS` if there are no errors.

41.4.7 ESMF_InfoCreate - Create an Info object from another Info object

INTERFACE:

```
   ! Private name; call using ESMF_InfoCreate()
 function ESMF_InfoCreateFromInfo(info, rc)
```

ARGUMENTS:

```
   type(ESMF_Info), intent(in) :: info
 -- The following arguments require argument keyword syntax (e.g. rc=rc). --
   integer, intent(out), optional :: rc
```

RETURN VALUE:

```
type(ESMF_Info) :: ESMF_InfoCreateFromInfo
```

DESCRIPTION:

Create an `ESMF_Info` object from another `ESMF_Info` object. The returned object is a deep copy of the source object.

The arguments are:

info The `ESMF_Info` object acting as the source data.

[rc] Return code; equals `ESMF_SUCCESS` if there are no errors.

41.4.8 ESMF_InfoCreate - Create a new Info object by string parsing

INTERFACE:

```
  ! Private name; call using ESMF_InfoCreate()
function ESMF_InfoCreateByParse(jsonString, rc)
```

ARGUMENTS:

```
  character(len=*), intent(in) :: jsonString
-- The following arguments require argument keyword syntax (e.g. rc=rc). --
  integer, intent(out), optional :: rc
```

RETURN VALUE:

```
type(ESMF_Info) :: ESMF_InfoCreateByParse
```

DESCRIPTION:

Create an `ESMF_Info` object by parsing a JSON-formatted string.

The arguments are:

jsonString The string to parse.

[rc] Return code; equals `ESMF_SUCCESS` if there are no errors.

41.4.9 ESMF_InfoDestroy - Destroy an Info object

INTERFACE:

```
subroutine ESMF_InfoDestroy(info, rc)
```

ARGUMENTS:

```
  type(ESMF_Info), intent(inout) :: info
-- The following arguments require argument keyword syntax (e.g. rc=rc). --
  integer, intent(out), optional :: rc
```

DESCRIPTION:

Destroy an `ESMF_Info` object. Destroying an `ESMF_Info` object created internally by an ESMF object results in an error

The arguments are:

info Target `ESMF_Info` object.

[rc] Return code; equals `ESMF_SUCCESS` if there are no errors.

41.4.10 ESMF_InfoDump - Dump Info contents to string

INTERFACE:

```
function ESMF_InfoDump(info, key, indent, rc) result(output)
```

ARGUMENTS:

```
  type(ESMF_Info), intent(in) :: info
-- The following arguments require argument keyword syntax (e.g. rc=rc). --
  character(*), intent(in), optional :: key
  integer, intent(in), optional :: indent
  integer, intent(out), optional :: rc
  RESULT:
  character(:), allocatable :: output
```

DESCRIPTION:

Dump the contents of an `ESMF_Info` object as a JSON string.

The arguments are:

info Target `ESMF_Info` object.

[key] String key to access in `ESMF_Info` storage. See section 41.2 for an overview of the key format.

[indent] Default is 0. Specifying an indentation greater than 0 will result in a "pretty print" for JSON output string (string includes new line breaks).

[rc] Return code; equals `ESMF_SUCCESS` if there are no errors.

41.4.11 ESMF_InfoGet - Get a numeric, logical, or fixed-size character value

INTERFACE:

```
subroutine ESMF_InfoGet(info, key, value, default, idx, attnestflag, rc)
```

ARGUMENTS:

```
    type(ESMF_Info), intent(in) :: info
    character(len=*), intent(in) :: key
    <value>, see below for supported value
 -- The following arguments require argument keyword syntax (e.g. rc=rc). --
    <default, optional> see below for supported default value
    integer, intent(in), optional :: idx
    type(ESMF_AttNest_Flag), intent(in), optional :: attnestflag
    integer, intent(out), optional :: rc
```

DESCRIPTION:

Get a value from an `ESMF_Info` object using a key. If the key is not found, *rc* will not equal `ESMF_SUCCESS`. The returned value is always a copy including gets with a *default*.

Overloaded *value* for the following types:

- `integer(kind=ESMF_KIND_I4)`
- `integer(kind=ESMF_KIND_I8)`
- `real(kind=ESMF_KIND_R4)`
- `real(kind=ESMF_KIND_R8)`
- `logical`
- `character(:)`

The arguments are:

info Target `ESMF_Info` object.

key String key to access in `ESMF_Info` storage. See section 41.2 for an overview of the key format.

value The output value associated with the key.

[default] A default value to use if the key is not present in the target `ESMF_Info` object. Must be the same typekind and size as *value*.

[idx] An integer index to get if the target key's value is a list.

[attnestflag] Setting to `ESMF_ATTNEST_ON` triggers a recursive search. The first instance of the key (searching by depth) will be found in the hierarchy. Default is `ESMF_ATTNEST_OFF`.

[rc] Return code; equals `ESMF_SUCCESS` if there are no errors.

41.4.12 ESMF_InfoGetCharAlloc - Get an allocatable character value

INTERFACE:

```
subroutine ESMF_InfoGetCharAlloc(info, key, value, default, idx, attnestflag, rc)
```

ARGUMENTS:

```
    type(ESMF_Info), intent(in) :: info
    character(len=*), intent(in) :: key
    character(:), allocatable, intent(out) :: value
 -- The following arguments require argument keyword syntax (e.g. rc=rc). --
    character(len=*), intent(in), optional :: default
    integer, intent(in), optional :: idx
    type(ESMF_AttNest_Flag), intent(in), optional :: attnestflag
    integer, intent(out), optional :: rc
```

DESCRIPTION:

Get a value from an `ESMF_Info` object using a key. If the key is not found, *rc* will not equal `ESMF_SUCCESS`. The returned value is always a copy including gets with a *default*.

The arguments are:

info Target `ESMF_Info` object.

key String key to access in `ESMF_Info` storage. See section 41.2 for an overview of the key format.

value The output value associated with the key.

[default] A default value to use if the key is not present in the target `ESMF_Info` object. Must be the same typekind and size as *value*.

[idx] An integer index to get if the target key's value is a list.

[attnestflag] Setting to `ESMF_ATTNEST_ON` triggers a recursive search. The first instance of the key (searching by depth) will be found in the hierarchy. Default is `ESMF_ATTNEST_OFF`.

[rc] Return code; equals `ESMF_SUCCESS` if there are no errors.

41.4.13 ESMF_InfoGet - Get a list

INTERFACE:

```
subroutine ESMF_InfoGet(info, key, values, itemCount, attnestflag, scalarToArray, rc)
```

ARGUMENTS:

```
    type(ESMF_Info), intent(in) :: info
    character(len=*), intent(in) :: key
    <values>, see below for supported values
 -- The following arguments require argument keyword syntax (e.g. rc=rc). --
    integer, intent(out), optional :: itemCount
    type(ESMF_AttNest_Flag), intent(in), optional :: attnestflag
    logical, intent(in), optional :: scalarToArray
    integer, intent(out), optional :: rc
```

DESCRIPTION:

Get a value list from an `ESMF_Info` object using a key. If the key is not found, *rc* will not equal `ESMF_SUCCESS`. The returned value is always a copy.

The length of *values* must match its length in storage.

Overloaded *values* for the following types:

- `integer(kind=ESMF_KIND_I4), dimension(:)`
- `integer(kind=ESMF_KIND_I8), dimension(:)`
- `real(kind=ESMF_KIND_R4), dimension(:)`
- `real(kind=ESMF_KIND_R8), dimension(:)`
- `logical, dimension(:)`
- `character(:), dimension(:)`

The arguments are:

info Target `ESMF_Info` object.

key String key to access in `ESMF_Info` storage. See section 41.2 for an overview of the key format.

values The output value list associated with the key.

[itemCount] The number of items in *values*.

[attnestflag] Default is `ESMF_ATTNEST_OFF`. Setting to `ESMF_ATTNEST_ON` triggers a recursive search. The first instance of the key will be found in the hierarchy.

[scalarToArray] Default is false. If true, allow conversion of scalar values in storage to single-valued lists.

[rc] Return code; equals `ESMF_SUCCESS` if there are no errors.

41.4.14 ESMF_InfoGetAlloc - Get an allocatable list

INTERFACE:

```
subroutine ESMF_InfoGetAlloc(info, key, values, itemCount, attnestflag, scalarToArray, rc
```

ARGUMENTS:

```
    type(ESMF_Info), intent(in) :: info
    character(len=*), intent(in) :: key
    <values>, see below for supported values
 -- The following arguments require argument keyword syntax (e.g. rc=rc). --
    integer, intent(out), optional :: itemCount
    type(ESMF_AttNest_Flag), intent(in), optional :: attnestflag
    logical, intent(in), optional :: scalarToArray
    integer, intent(out), optional :: rc
```

DESCRIPTION:

Get a value list from an `ESMF_Info` object using a key. If the key is not found, *rc* will not equal `ESMF_SUCCESS`. The returned value is always a copy.

Overloaded *values* for the following types:

- `integer(kind=ESMF_KIND_I4), dimension(:), allocatable`
- `integer(kind=ESMF_KIND_I8), dimension(:), allocatable`
- `real(kind=ESMF_KIND_R4), dimension(:), allocatable`
- `real(kind=ESMF_KIND_R8), dimension(:), allocatable`
- `logical, dimension(:), allocatable`
- `character(:), dimension(:), allocatable`

The arguments are:

info Target `ESMF_Info` object.

key String key to access in `ESMF_Info` storage. See section 41.2 for an overview of the key format.

values The output value list associated with the key.

[itemCount] The number of items in *values*.

[attnestflag] Default is `ESMF_ATTNEST_OFF`. Setting to `ESMF_ATTNEST_ON` triggers a recursive search. The first instance of the key will be found in the hierarchy.

[scalarToArray] Default is false. If true, allow conversion of scalar values in storage to single-valued lists.

[rc] Return code; equals `ESMF_SUCCESS` if there are no errors.

41.4.15 ESMF_InfoGet - Inquire an Info object for metadata

INTERFACE:

```
  ! Private name; call using ESMF_InfoGet()
 subroutine ESMF_InfoInquire(info, size, key, jsonType, isArray, &
   isDirty, idx, typekind, ikey, isPresent, isStructured, isNull, rc)
```

ARGUMENTS:

```
   type(ESMF_Info), intent(in) :: info
-- The following arguments require argument keyword syntax (e.g. rc=rc). --
   integer, intent(out), optional :: size
   character(len=*), intent(in), optional :: key
   character(len=*), intent(out), optional :: jsonType
   logical, intent(out), optional :: isArray
   logical, intent(out), optional :: isDirty
   integer, intent(in), optional :: idx
   type(ESMF_TypeKind_Flag), intent(out), optional :: typekind
   character(len=*), intent(out), optional :: ikey
   logical, intent(out), optional :: isPresent
   logical, intent(out), optional :: isStructured
   logical, intent(out), optional :: isNull
   integer, intent(out), optional :: rc
```

DESCRIPTION:

Inquire an `ESMF_Info` object for metadata.

The arguments are:

info Target `ESMF_Info` object.

[size] Returns the size of the target. The following rules apply:

- If the target is an object, return the number of key-value pairs.
- If the target is a scalar, return `1`.
- If the target is an array, return its length.

[key] If provided, use this location as the origin instead of root. See section 41.2 for an overview of the key format.

[jsonType] Returns the JSON object type name [9].

[isArray] Returns true if the target is an array.

[isDirty] Returns true if the `ESMF_Info` object should be synchronized during an `ESMF_InfoSync` operation.

[idx] An integer index to use. This will index into an object type providing the primary mechanism for iteration.

[typekind] Get the ESMF typekind for the target. The minimum typekind required to hold the value is returned. See section 55.61 for valid values.

[ikey] If present, this will be set to the key's name for the current inquire. Useful when iterating using an index. This does *not* return the full key path if nested.

[isPresent] Returns true if the *key* exists in storage. If no *key* is provided, this will return true.

[isStructured] Returns true if the target is structured [4]. This means it is either an object (a map) or an array.

[isNull] Returns true if the target is null [7].

[rc] Return code; equals `ESMF_SUCCESS` if there are no errors.

41.4.16 ESMF_InfoGetFromHost - Get an Info handle from an ESMF object

INTERFACE:

```
subroutine ESMF_InfoGetFromHost(host, info, rc)
```

ARGUMENTS:

```
    type(ESMF_*), intent(inout) :: host
    type(ESMF_Info), intent(out) :: info
 -- The following arguments require argument keyword syntax (e.g. rc=rc). --
    integer, intent(out), optional :: rc
```

DESCRIPTION:

Get an `ESMF_Info` object handle from a host ESMF object. The returned handle should not be destroyed.

The arguments are:

host Target ESMF object. Overloaded for:

- `ESMF_Array`
- `ESMF_ArrayBundle`
- `ESMF_CplComp`
- `ESMF_GridComp`
- `ESMF_SciComp`
- `ESMF_DistGrid`
- `ESMF_Field`
- `ESMF_FieldBundle`
- `ESMF_Grid`
- `ESMF_State`
- `ESMF_LocStream`
- `ESMF_Mesh`

info Outgoing `ESMF_Info` object.

[rc] Return code; equals `ESMF_SUCCESS` if there are no errors.

41.4.17 ESMF_InfoGetTK - Retrieve the ESMF TypeKind for a key

INTERFACE:

```
function ESMF_InfoGetTK(info, key, attnestflag, rc) result(typekind)
```

ARGUMENTS:

```
  type(ESMF_Info), intent(in) :: info
  character(len=*), intent(in) :: key
-- The following arguments require argument keyword syntax (e.g. rc=rc). --
  type(ESMF_AttNest_Flag), intent(in), optional :: attnestflag
  integer, intent(out), optional :: rc
```

RETURN VALUE:

```
  type(ESMF_TypeKind_Flag) :: typekind
```

DESCRIPTION:

Return the ESMF TypeKind of the value associated with *key*. See section 55.61 for valid return values.

The arguments are:

info Target `ESMF_Info` object.

key String key to access in `ESMF_Info` storage. See section 41.2 for an overview of the key format.

[attnestflag] Setting to `ESMF_ATTNEST_ON` triggers a recursive search for *keyParent*. The first instance of the key will be found in the hierarchy. Default is `ESMF_ATTNEST_OFF`.

[rc] Return code; equals `ESMF_SUCCESS` if there are no errors.

41.4.18 ESMF_InfoGetArrayMeta - Retrieve array metadata information

INTERFACE:

```
subroutine ESMF_InfoGetArrayMeta(info, key, isArray, size, attnestflag, rc)
```

ARGUMENTS:

```
  type(ESMF_Info), intent(in) :: info
  character(len=*), intent(in) :: key
  logical, intent(out) :: isArray
  integer(C_INT), intent(out) :: size
-- The following arguments require argument keyword syntax (e.g. rc=rc). --
  type(ESMF_AttNest_Flag), intent(in), optional :: attnestflag
  integer, intent(out), optional :: rc
```

DESCRIPTION:

Return a value's array status and size using a *key*.

The arguments are:

info Target `ESMF_Info` object.

key String key to access in `ESMF_Info` storage. See section 41.2 for an overview of the key format.

isArray Set to `true` if the target is an array in storage.

size Set to the size of the target object in storage (i.e. length of the array).

[attnestflag] Setting to `ESMF_ATTNEST_ON` triggers a recursive search for *keyParent*. The first instance of the key will be found in the hierarchy. Default is `ESMF_ATTNEST_OFF`.

[rc] Return code; equals `ESMF_SUCCESS` if there are no errors.

41.4.19 ESMF_InfoIsPresent - Check for key presence

INTERFACE:

```
function ESMF_InfoIsPresent(info, key, attnestflag, isPointer, rc) result(is_present)
```

ARGUMENTS:

```
  type(ESMF_Info), intent(in) :: info
  character(len=*), intent(in) :: key
-- The following arguments require argument keyword syntax (e.g. rc=rc). --
  type(ESMF_AttNest_Flag), intent(in), optional :: attnestflag
  logical, intent(in), optional :: isPointer
  integer, intent(out), optional :: rc
```

RETURN VALUE:

```
  logical :: is_present
```

DESCRIPTION:

Return true if *key* exists in `ESMF_Info`'s storage.

The arguments are:

info Target `ESMF_Info` object.

key String key to access in `ESMF_Info` storage. See section 41.2 for an overview of the key format.

[attnestflag] Setting to `ESMF_ATTNEST_ON` triggers a recursive search for *keyParent*. The first instance of the key will be found in the hierarchy. Default is `ESMF_ATTNEST_OFF`.

[isPointer] Default is true. If true, expect the *key* is using JSON Pointer syntax (see section 41.2). Setting to false will trigger a slightly faster search.

[rc] Return code; equals `ESMF_SUCCESS` if there are no errors.

41.4.20 ESMF_InfoIsSet - Check if a value is null

INTERFACE:

```
function ESMF_InfoIsSet(info, key, rc) result(is_set)
```

ARGUMENTS:

```
  type(ESMF_Info), intent(in) :: info
  character(len=*), intent(in) :: key
-- The following arguments require argument keyword syntax (e.g. rc=rc). --
  integer, intent(out), optional :: rc
```

RETURN VALUE:

```
  logical :: is_set
```

DESCRIPTION:

Returns true if the target value is not null [7].

The arguments are:

info Target `ESMF_Info` object.

key String key to access in `ESMF_Info` storage. See section 41.2 for an overview of the key format.

[rc] Return code; equals `ESMF_SUCCESS` if there are no errors.

41.4.21 ESMF_InfoLog - Log contents of an Info object

INTERFACE:

```
subroutine ESMF_InfoLog(info, prefix, logMsgFlag, rc)
```

ARGUMENTS:

```
  type(ESMF_Info), intent(in)                        :: info
-- The following arguments require argument keyword syntax (e.g. rc=rc). --
    character(len=*),       intent(in),   optional  :: prefix
    type(ESMF_LogMsg_Flag), intent(in),   optional  :: logMsgFlag
    integer, intent(out),                 optional  :: rc
```

DESCRIPTION:

Write information about `info` object to the ESMF default Log.

The arguments are:

info `ESMF_Info` object logged.

[prefix] String to prefix the log message. Default is no prefix.

[logMsgFlag] Type of log message generated. See section 50.2.3 for a list of valid message types. Default is `ESMF_LOGMSG_INFO`.

[rc] Return code; equals `ESMF_SUCCESS` if there are no errors.

41.4.22 ESMF_InfoPrint - Print contents of an Info object

INTERFACE:

```
subroutine ESMF_InfoPrint(info, indent, preString, unit, rc)
```

ARGUMENTS:

```
  type(ESMF_Info), intent(in) :: info
-- The following arguments require argument keyword syntax (e.g. rc=rc). --
  character(*), intent(in), optional :: preString
  character(*), intent(out), optional :: unit
  integer, intent(in), optional :: indent
  integer, intent(out), optional :: rc
```

DESCRIPTION:

Print `ESMF_Info` contents in JSON format.

The arguments are:

info Target `ESMF_Info` object.

[indent] Default is 0. Specify a "pretty print" indentation for the JSON output string.

[preString] Optionally prepended string. Default to empty string.

[unit] Internal unit, i.e. a string. Default to printing to stdout.

[rc] Return code; equals `ESMF_SUCCESS` if there are no errors.

41.4.23 ESMF_InfoReadJSON - Read JSON data from file

INTERFACE:

```
function ESMF_InfoReadJSON(filename, rc) result(info_r)
```

ARGUMENTS:

```
  character(len=*), intent(in) :: filename
-- The following arguments require argument keyword syntax (e.g. rc=rc). --
  integer, intent(out), optional :: rc
```

RETURN VALUE:

```
  type(ESMF_Info) :: info_r
```

DESCRIPTION:

Read JSON data from a file and return a new `ESMF_Info` object.

The arguments are:

filename Path to the input file.

[rc] Return code; equals `ESMF_SUCCESS` if there are no errors.

41.4.24 ESMF_InfoRemove - Remove a key-value pair from an Info object

INTERFACE:

```
subroutine ESMF_InfoRemove(info, keyParent, keyChild, attnestflag, rc)
```

ARGUMENTS:

```
  type(ESMF_Info), intent(inout) :: info
  character(len=*), intent(in) :: keyParent
-- The following arguments require argument keyword syntax (e.g. rc=rc). --
  character(len=*), intent(in), optional :: keyChild
  type(ESMF_AttNest_Flag), intent(in), optional :: attnestflag
  integer, intent(out), optional :: rc
```

DESCRIPTION:

Remove a key-value pair from an `ESMF_Info` object.

The arguments are:

info Target `ESMF_Info` object.

keyParent String key to identify the parent location for the removal. If no *keyChild* is specified, then the root location is assumed. See section 41.2 for an overview of the key format.

[keyChild] String key to identify the value for the removal. This *may not* be a path.

[attnestflag] Setting to `ESMF_ATTNEST_ON` triggers a recursive search for *keyParent*. The first instance of the key will be found in the hierarchy. Default is `ESMF_ATTNEST_OFF`.

[rc] Return code; equals `ESMF_SUCCESS` if there are no errors.

41.4.25 ESMF_InfoSet - Set a value

INTERFACE:

```
subroutine ESMF_InfoSet(info, key, value, force, idx, pkey, rc)
```

ARGUMENTS:

```
    type(ESMF_Info), intent(inout) :: info
    character(len=*), intent(in) :: key
    <value>, see below for supported value
 -- The following arguments require argument keyword syntax (e.g. rc=rc). --
    logical, intent(in), optional :: force
    integer, intent(in), optional :: idx
    character(len=*), intent(in), optional :: pkey
    integer, intent(out), optional :: rc
```

DESCRIPTION:

Set a *value* in an `ESMF_Info` object using a key.

Overloaded *value* for the following types:

- `integer(kind=ESMF_KIND_I4)`
- `integer(kind=ESMF_KIND_I8)`
- `real(kind=ESMF_KIND_R4)`
- `real(kind=ESMF_KIND_R8)`
- `logical`
- `character(:)`

The arguments are:

info Target `ESMF_Info` object.

key String key to access in `ESMF_Info` storage. See section 41.2 for an overview of the key format.

value The input value associated with the key.

[force] Default is true. When true, insert the key even if it already exists in storage. If false, *rc* will not return `ESMF_SUCCESS` if the key already exists.

[idx] An integer index to set if the target key's value is a list.

[pkey] Use this key's location as the origin for the set call.

[rc] Return code; equals `ESMF_SUCCESS` if there are no errors.

41.4.26 ESMF_InfoSet - Set a key to the contents of an Info object

INTERFACE:

```
   ! Private name; call using ESMF_InfoSet
 subroutine ESMF_InfoSetINFO(info, key, value, force, rc)
```

ARGUMENTS:

```
   type(ESMF_Info), intent(inout) :: info
   character(len=*), intent(in) :: key
   type(ESMF_Info), intent(in) :: value
 -- The following arguments require argument keyword syntax (e.g. rc=rc). --
   logical, intent(in), optional :: force
   integer, intent(out), optional :: rc
```

DESCRIPTION:

Set a value to the contents of an `ESMF_Info` object. A copy of the source contents is made.

The arguments are:

info Target `ESMF_Info` object.

key String key to access in `ESMF_Info` storage. See section 41.2 for an overview of the key format.

value The `ESMF_Info` object to use as source data.

[force] Default is true. When true, insert the key even if it already exists in storage. If false, *rc* will not return `ESMF_SUCCESS` if the key already exists.

[rc] Return code; equals `ESMF_SUCCESS` if there are no errors.

41.4.27 ESMF_InfoSet - Set contents from a HConfig object

INTERFACE:

```
   ! Private name; call using ESMF_InfoSet
 recursive subroutine ESMF_InfoSetHConfig(info, value, keyPrefix, force, rc)
```

ARGUMENTS:

```
   type(ESMF_Info), intent(inout) :: info
   type(ESMF_HConfig), intent(in) :: value
 -- The following arguments require argument keyword syntax (e.g. rc=rc). --
   character(len=*), intent(in), optional :: keyPrefix
   logical, intent(in), optional :: force
   integer, intent(out), optional :: rc
```

DESCRIPTION:

The provided `ESMF_HConfig` object is expected to be a *map*. An error is returned if this condition is not met. Each key-value pair held by the `ESMF_HConfig` object is added to the `ESMF_Info` object. A copy of the source contents is made.

Transfer of *scalar*, *sequence*, and *map* values from `ESMF_HConfig` to `ESMF_Info` are supported. Maps are treated recursively. Sequences are restricted to scalar elements of the same typekind.

The keys of any map provided by the `ESMF_HConfig` object must be of scalar type. Keys are interpreted as strings when transferred to the `ESMF_Info` object. YAML merge keys "«" are supported.

When existing keys in `info` are overridden by this operation, the typekind of the associated value element is allowed to change.

The arguments are:

info Target `ESMF_Info` object.

value The `ESMF_HConfig` object to use as source data.

[keyPrefix] If provided, prepend `keyPrefix` to each of the keys found in the `value` map.

[force] Default is true. When true, insert the key even if it already exists in storage. If false, *rc* will not return `ESMF_SUCCESS` if the key already exists.

[rc] Return code; equals `ESMF_SUCCESS` if there are no errors.

41.4.28 ESMF_InfoSet - Set a value list

INTERFACE:

```
  subroutine ESMF_InfoSet(info, key, values, force, pkey, rc)
```

ARGUMENTS:

```
    type(ESMF_Info), intent(inout) :: info
    character(len=*), intent(in) :: key
    <values>, see below for supported values
 -- The following arguments require argument keyword syntax (e.g. rc=rc). --
    logical, intent(in), optional :: force
    character(len=*), intent(in), optional :: pkey
    integer, intent(out), optional :: rc
```

DESCRIPTION:

Set a value list in an `ESMF_Info` object using a key. List values are initialized to null.

Overloaded *values* for the following types:

- `integer(kind=ESMF_KIND_I4), dimension(:)`
- `integer(kind=ESMF_KIND_I8), dimension(:)`
- `real(kind=ESMF_KIND_R4), dimension(:)`
- `real(kind=ESMF_KIND_R8), dimension(:)`
- `logical, dimension(:)`
- `character(:), dimension(:)`

The arguments are:

info Target `ESMF_Info` object.

key String key to access in `ESMF_Info` storage. See section 41.2 for an overview of the key format.

values The input value list associated with the key.

[force] Default is true. When true, insert the key even if it already exists in storage. If false, *rc* will not return `ESMF_SUCCESS` if the key already exists.

[pkey] Use this key's location as the origin for the set call. Used primarily for recursive requirements related to `ESMF_Attribute`.

[rc] Return code; equals `ESMF_SUCCESS` if there are no errors.

41.4.29 ESMF_InfoSetNULL - Set a value to null

INTERFACE:

```
 subroutine ESMF_InfoSetNULL(info, key, force, rc)
```

ARGUMENTS:

```
  type(ESMF_Info), intent(inout) :: info
  character(len=*), intent(in) :: key
-- The following arguments require argument keyword syntax (e.g. rc=rc). --
  logical, intent(in), optional :: force
  integer, intent(out), optional :: rc
```

DESCRIPTION:

Set a value to null [7].

The arguments are:

info Target `ESMF_Info` object.

key String key to access in `ESMF_Info` storage. See section 41.2 for an overview of the key format.

[force] Default is true. When true, insert the key even if it already exists in storage. If false, *rc* will not return `ESMF_SUCCESS` if the key already exists.

[rc] Return code; equals `ESMF_SUCCESS` if there are no errors.

41.4.30 ESMF_InfoSync - Synchronize Info contents across a VM

INTERFACE:

```
subroutine ESMF_InfoSync(host, rootPet, vm, markClean, &
   rc)
```

ARGUMENTS:

```
  type(ESMF_*), intent(inout) :: host
  integer, intent(in) :: rootPet
  type(ESMF_VM), intent(in) :: vm
-- The following arguments require argument keyword syntax (e.g. rc=rc). --
  logical, intent(in), optional :: markClean
  integer, intent(out), optional :: rc
```

DESCRIPTION:

Synchronize `ESMF_Info` contents collectively across the current VM. Contents on the *rootPet* are set as the contents on matching objects sharing the VM. An attempt is made to optimize by only communicating updated contents (i.e. something set or modified). This subroutine will traverse the ESMF object hierarchy associated with `host` (i.e. Arrays in an ArrayBundle, Fields in a FieldBundle, etc.).

Users interested in broadcasting only the `ESMF_Info` object should consult the `ESMF_InfoBroadcast` documentation 41.4.4.

The arguments are:

host Target ESMF object. Overloaded for:

- ESMF_State
- ESMF_CplComp
- ESMF_GridComp
- ESMF_SciComp
- ESMF_Field
- ESMF_FieldBundle

rootPet The root PET to use for the synchronization.

vm The VM to synchronize across.

[markClean] Default is false. If true, mark changed ESMF_Info contents as clean once synchronized. These contents will no longer be broadcast in consecutive calls to ESMF_InfoSync.

[rc] Return code; equals ESMF_SUCCESS if there are no errors.

41.4.31 ESMF_InfoUpdate - Update the contents of an Info object

INTERFACE:

```
subroutine ESMF_InfoUpdate(lhs, rhs, recursive, overwrite, rc)
```

ARGUMENTS:

```
  type(ESMF_Info), intent(inout) :: lhs
  type(ESMF_Info), intent(in) :: rhs
-- The following arguments require argument keyword syntax (e.g. rc=rc). --
  logical, intent(in), optional :: recursive
  logical, intent(in), optional :: overwrite
  integer, intent(out), optional :: rc
```

DESCRIPTION:

Update the contents of *lhs* using the contents of *rhs*. The operation inserts or overwrites any key in *lhs* if it exists in *rhs*. Otherwise, the contents of *lhs* is left unaltered. See the JSON documentation for implementation details [10]. If *recursive* is *.true.* (default is .false.), nested objects will be updated by their component key/values. Otherwise, the first instance or top-level key is replaced without the child contents being updated element-by-element.

The arguments are:

lhs The ESMF_Info object to update.

rhs The ESMF_Info object whose contents are used to update *lhs*.

[recursive] Default is .false.. If .true., descend into nested objects and recursively update the contents.

[overwrite] Default is .false.. If .true., key-values that exist in *lhs* will be overwritten by key-values in *rhs*. Flag is only applicable when *recursive* is .true..

[rc] Return code; equals ESMF_SUCCESS if there are no errors.

41.4.32 ESMF_InfoWriteJSON - Write Info contents to file

INTERFACE:

```
subroutine ESMF_InfoWriteJSON(info, filename, rc)
```

ARGUMENTS:

```
  type(ESMF_Info), intent(in) :: info
  character(len=*), intent(in) :: filename
-- The following arguments require argument keyword syntax (e.g. rc=rc). --
  integer, intent(out), optional :: rc
```

DESCRIPTION:

Write `ESMF_Info` contents to file using the JSON format.

The arguments are:

info Target `ESMF_Info` object.

filename Path to the output file.

[rc] Return code; equals `ESMF_SUCCESS` if there are no errors.

42 Time Manager Utility

The ESMF Time Manager utility includes software for time and date representation and calculations, model time advancement, and the identification of unique and periodic events. Since multi-component geophysical applications often require synchronization across the time management schemes of the individual components, the Time Manager's standard calendars and consistent time representation promote component interoperability.

Key Features
Drift-free timekeeping through an integer-based internal time representation. Both integers and reals can be specified at the interface.
The ability to represent time as a rational fraction, to support exact timekeeping in applications that involve grid refinement.
Support for many calendar kinds, including user-customized calendars.
Support for both concurrent and sequential modes of component execution.
Support for varying and negative time steps.

42.1 Time Manager Classes

There are five ESMF classes that represent time concepts:

- **Calendar** A Calendar can be used to keep track of the date as an ESMF Gridded Component advances in time. Standard calendars (such as Gregorian and 360-day) and user-specified calendars are supported. Calendars can be queried for quantities such as seconds per day, days per month, and days per year.

- **Time** A Time represents a time instant in a particular calendar, such as November 28, 1964, at 7:31pm EST in the Gregorian calendar. The Time class can be used to represent the start and stop time of a time integration.
- **TimeInterval** TimeIntervals represent a period of time, such as 300 milliseconds. Time steps can be represented using TimeIntervals.
- **Clock** Clocks collect the parameters and methods used for model time advancement into a convenient package. A Clock can be queried for quantities such as start time, stop time, current time, and time step. Clock methods include incrementing the current time, and determining if it is time to stop.
- **Alarm** Alarms identify unique or periodic events by "ringing" - returning a true value - at specified times. For example, an Alarm might be set to ring on the day of the year when leaves start falling from the trees in a climate model.

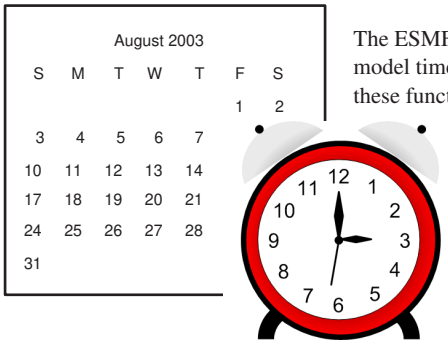

The ESMF Time Manager utility includes software to manage model calendars, advance model time, and perform time and date calculations. The software classes that handle these functions are **Times**, **TimeIntervals**, **Clocks**, **Alarms**, and **Calendars**.

In the remainder of this section, we briefly summarize the functionality that the Time Manager classes provide. Detailed descriptions and usage examples precede the API listing for each class.

42.2 Calendar

An ESMF Calendar can be queried for seconds per day, days per month and days per year. The flexible definition of Calendars allows them to be defined for planetary bodies other than Earth. The set of supported calendars includes:

Gregorian The standard Gregorian calendar.

no-leap The Gregorian calendar with no leap years.

Julian The standard Julian date calendar.

Julian Day The standard Julian days calendar.

Modified Julian Day The Modified Julian days calendar.

360-day A 30-day-per-month, 12-month-per-year calendar.

no calendar Tracks only elapsed model time in hours, minutes, seconds.

See Section 43.1 for more details on supported standard calendars, and how to create a customized ESMF Calendar.

42.3 Time Instants and TimeIntervals

TimeIntervals and Time instants (simply called Times) are the computational building blocks of the Time Manager utility. TimeIntervals support operations such as add, subtract, compare size, reset value, copy value, and subdivide by a scalar. Times, which are moments in time associated with specific Calendars, can be incremented or decremented by TimeIntervals, compared to determine which of two Times is later, differenced to obtain the TimeInterval between two Times, copied, reset, and manipulated in other useful ways. Times support a host of different queries, both for values of individual Time components such as year, month, day, and second, and for derived values such as day of year, middle of current month and Julian day. It is also possible to retrieve the value of the hardware realtime clock in the form of a Time. See Sections 44.1 and 45.1, respectively, for use and examples of Times and TimeIntervals.

Since climate modeling, numerical weather prediction and other Earth and space applications have widely varying time scales and require different sorts of calendars, Times and TimeIntervals must support a wide range of time specifiers, spanning nanoseconds to years. The interfaces to these time classes are defined so that the user can specify a time using a combination of units selected from the list shown in Table 42.4.

42.4 Clocks and Alarms

Although it is possible to repeatedly step a Time forward by a TimeInterval using arithmetic on these basic types, it is useful to identify a higher-level concept to represent this function. We refer to this capability as a Clock, and include in its required features the ability to store the start and stop times of a model run, to check when time advancement should cease, and to query the value of quantities such as the current time and the time at the previous time step. The Time Manager includes a class with methods that return a true value when a periodic or unique event has taken place; we refer to these as Alarms. Applications may contain temporary or multiple Clocks and Alarms. Sections 46.1 and 47.1 describe the use of Clocks and Alarms in detail.

Table 4: Specifiers for Times and TimeIntervals

Unit	Meaning
<yy|yy_i8>	Year.
mm	Month of the year.
dd	Day of the month.
<d|d_i8|d_r8>	Julian or Modified Julian day.
<h|h_r8>	Hour.
<m|m_r8>	Minute.
<s|s_i8|s_r8>	Second.
<ms|ms_r8>	Millisecond.
<us|us_r8>	Microsecond.
<ns|ns_r8>	Nanosecond.
O	Time zone offset in integer number of hours and minutes.
<sN|sN_i8>	Numerator for times of the form $s + \frac{sN}{sD}$, where s is seconds and s, sN, and sD are integers. This format provides a mechanism for supporting exact behavior.
<sD|sD_i8	Denominator for times of the form $s + \frac{sN}{sD}$, where s is seconds and s, sN, and sD are integers.

42.5 Design and Implementation Notes

1. **Base TimeIntervals and Times on the same integer representation.** It is useful to allow both TimeIntervals and Times to inherit from a single class, BaseTime. In C++, this can be implemented by using inheritance. In Fortran, it can be implemented by having the derived types TimeIntervals and Times contain a derived type BaseTime. In both cases, the BaseTime class can be made private and invisible to the user.

   The result of this strategy is that Time Intervals and Times gain a consistent core representation of time as well a set of basic methods.

   The BaseTime class can be designed with a minimum number of elements to represent any required time. The design is based on the idea used in the real-time POSIX 1003.1b-1993 standard. That is, to represent time simply as a pair of integers: one for seconds (whole) and one for nanoseconds (fractional). These can then be converted at the interface level to any desired format.

   For ESMF, this idea can be modified and extended, in order to handle the requirements for a large time range (> 200,000 years) and to exactly represent any rational fraction, not just nanoseconds. To handle the large time range, a 64-bit or greater integer is used for whole seconds. Any rational fractional second is expressed using two additional integers: a numerator and a denominator. Both the whole seconds and fractional numerator are signed to handle negative time intervals and instants. For arithmetic consistency both must carry the same sign (both positive or both negative), except, of course, for zero values. The fractional seconds element (numerator) is bounded with respect to whole seconds. If the absolute value of the numerator becomes greater than or equal to the denominator, whole seconds are incremented or decremented accordingly and the numerator is reset to the remainder. Conversions are performed upon demand by interface methods within the TimeInterval and Time classes. This is done because different applications require different representations of time intervals and time instances. Floating point values as well as integers can be specified for the various time units in the interfaces, see Table 42.4. Floating point values are represented internally as integer-based rational fractions.

   The BaseTime class defines increment and decrement methods for basic TimeInterval calculations between Time instants. It is done here rather than in the Calendar class because it can be done with simple second-based

arithmetic that is calendar independent.

Comparison methods can also be defined in the BaseTime class. These perform equality/inequality, less than, and greater than comparisons between any two TimeIntervals or Times. These methods capture the common comparison logic between TimeIntervals and Times and hence are defined here for sharing.

2. **The Time class depends on a calendar.** The Time class contains an internal Calendar class. Upon demand by a user, the results of an increment or decrement operation are converted to user units, which may be calendar-dependent, via methods obtained from their internal Calendar.

42.6 Object Model

The following is a simplified UML diagram showing the structure of the Time Manager utility. See Appendix A, *A Brief Introduction to UML*, for a translation table that lists the symbols in the diagram and their meaning.

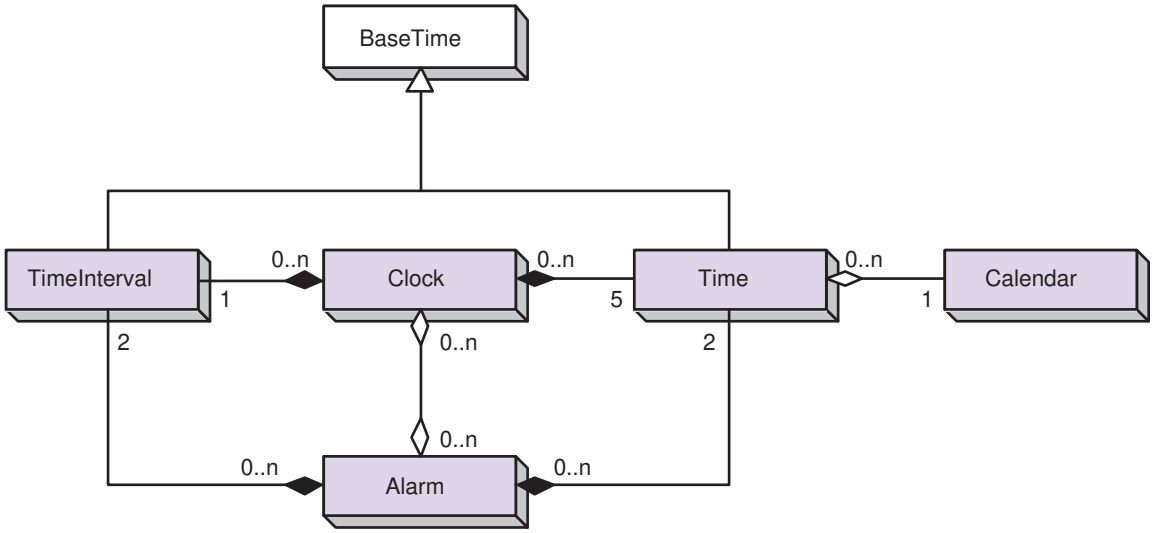

43 Calendar Class

43.1 Description

The Calendar class represents the standard calendars used in geophysical modeling: Gregorian, Julian, Julian Day, Modified Julian Day, no-leap, 360-day, and no-calendar. It also supports a user-customized calendar. Brief descriptions are provided for each calendar below. For more information on standard calendars, see [30] and [26].

43.2 Constants

43.2.1 ESMF_CALKIND

DESCRIPTION:
Supported calendar kinds.

The type of this flag is:

`type(ESMF_CalKind_Flag)`

The valid values are:

ESMF_CALKIND_360DAY *Valid range: machine limits*
In the 360-day calendar, there are 12 months, each of which has 30 days. Like the no-leap calendar, this is a simple approximation to the Gregorian calendar sometimes used by modelers.

ESMF_CALKIND_CUSTOM *Valid range: machine limits*
The user can set calendar parameters in the generic calendar.

ESMF_CALKIND_GREGORIAN *Valid range: 3/1/4801 BC to 10/29/292,277,019,914*
The Gregorian calendar is the calendar currently in use throughout Western countries. Named after Pope Gregory XIII, it is a minor correction to the older Julian calendar. In the Gregorian calendar every fourth year is a leap year in which February has 29 and not 28 days; however, years divisible by 100 are not leap years unless they are also divisible by 400. As in the Julian calendar, days begin at midnight. (ESMF does *not* handle leap seconds.)

ESMF_CALKIND_JULIAN *Valid range: 3/1/4713 BC to 4/24/292,271,018,333*
The Julian calendar was introduced by Julius Caesar in 46 B.C., and reached its final form in 4 A.D. The Julian calendar differs from the Gregorian only in the determination of leap years, lacking the correction for years divisible by 100 and 400 in the Gregorian calendar. In the Julian calendar, any year is a leap year if divisible by 4. Days are considered to begin at midnight.

ESMF_CALKIND_JULIANDAY *Valid range: +/- $1x10^{14}$*
Julian days simply enumerate the days and fraction of a day which have elapsed since the start of the Julian era, defined as beginning at noon on Monday, 1st January of year 4713 B.C. in the Julian calendar. Julian days, unlike the dates in the Julian and Gregorian calendars, begin at noon.

ESMF_CALKIND_MODJULIANDAY *Valid range: +/- $1x10^{14}$*
The Modified Julian Day (MJD) was introduced by space scientists in the late 1950's. It is defined as an offset from the Julian Day (JD):

MJD = JD - 2400000.5

The half day is subtracted so that the day starts at midnight.

ESMF_CALKIND_NOCALENDAR *Valid range: machine limits*
The no-calendar option simply tracks the elapsed model time in seconds.

ESMF_CALKIND_NOLEAP *Valid range: machine limits*
The no-leap calendar is the Gregorian calendar with no leap years - February is always assumed to have 28 days. Modelers sometimes use this calendar as a simple, close approximation to the Gregorian calendar.

43.3 Use and Examples

In most multi-component Earth system applications, the timekeeping in each component must refer to the same standard calendar in order for the components to properly synchronize. It therefore makes sense to create as few ESMF Calendars as possible, preferably one per application. A typical strategy would be to create a single Calendar at the start of an application, and use that Calendar in all subsequent calls that accept a Calendar, such as `ESMF_TimeSet`.

The following example shows how to set up an ESMF Calendar.

```
! !PROGRAM: ESMF_CalendarEx - Calendar creation examples
!
! !DESCRIPTION:
!
! This program shows examples of how to create different calendar kinds
!-----------------------------------------------------------------------------
#include "ESMF.h"

      ! ESMF Framework module
      use ESMF
      use ESMF_TestMod
      implicit none

      ! instantiate calendars
      type(ESMF_Calendar) :: gregorianCalendar
      type(ESMF_Calendar) :: julianDayCalendar
      type(ESMF_Calendar) :: marsCalendar

      ! local variables for Get methods
      integer :: sols
      integer(ESMF_KIND_I8) :: dl
      type(ESMF_Time) :: time, marsTime
      type(ESMF_TimeInterval) :: marsTimeStep

      ! return code
      integer:: rc

      ! initialize ESMF framework
      call ESMF_Initialize(defaultlogfilename="CalendarEx.Log", &
                   logkindflag=ESMF_LOGKIND_MULTI, rc=rc)
```

43.3.1 Calendar creation

This example shows how to create three `ESMF_Calendars`.

```
      ! create a Gregorian calendar
```

```
gregorianCalendar = ESMF_CalendarCreate(ESMF_CALKIND_GREGORIAN, &
                                        name="Gregorian", rc=rc)

! create a Julian Day calendar
julianDayCalendar = ESMF_CalendarCreate(ESMF_CALKIND_JULIANDAY, &
                                        name="JulianDay", rc=rc)

! create a Custom calendar for the planet Mars
! 1 Mars solar day = 24 hours, 39 minutes, 35 seconds = 88775 seconds
! 1 Mars solar year = 668.5921 Mars solar days = 668 5921/10000 sols/year
! http://www.giss.nasa.gov/research/briefs/allison_02
! http://www.giss.nasa.gov/tools/mars24/help/notes.html
marsCalendar = ESMF_CalendarCreate(secondsPerDay=88775, &
                                   daysPerYear=668, &
                                   daysPerYearDn=5921, &
                                   daysPerYearDd=10000, &
                                   name="MarsCalendar", rc=rc)
```

43.3.2 Calendar comparison

This example shows how to compare an `ESMF_Calendar` with a known calendar kind.

```
! compare calendar kind against a known type
if (gregorianCalendar == ESMF_CALKIND_GREGORIAN) then
  print *, "gregorianCalendar is of type ESMF_CALKIND_GREGORIAN."
else
  print *, "gregorianCalendar is not of type ESMF_CALKIND_GREGORIAN."
end if
```

43.3.3 Time conversion between Calendars

This example shows how to convert a time from one `ESMF_Calendar` to another.

```
call ESMF_TimeSet(time, yy=2004, mm=4, dd=17, &
                  calendar=gregorianCalendar, rc=rc)

! switch time's calendar to perform conversion
call ESMF_TimeSet(time, calendar=julianDayCalendar, rc=rc)

call ESMF_TimeGet(time, d_i8=dl, rc=rc)
print *, "Gregorian date 2004/4/17 is ", dl, &
         " days in the Julian Day calendar."
```

43.3.4 Add a time interval to a time on a Calendar

This example shows how to increment a time using a custom `ESMF_Calendar`.

```
! Set a time to Mars solar year 3, sol 100
call ESMF_TimeSet(marsTime, yy=3, d=100, &
                  calendar=marsCalendar, rc=rc)
```

```
! Set a 1 solar year time step
call ESMF_TimeIntervalSet(marsTimeStep, yy=1, rc=rc)

! Perform the increment
marsTime = marsTime + marsTimeStep

! Get the result in sols (2774 = (3+1)*668.5921 + 100)
call ESMF_TimeGet(marsTime, d=sols, rc=rc)
print *, "For Mars, 3 solar years, 100 sols + 1 solar year = ", &
          sols, "sols."
```

43.3.5 Calendar destruction

This example shows how to destroy three `ESMF_Calendars`.

```
call ESMF_CalendarDestroy(julianDayCalendar, rc=rc)

call ESMF_CalendarDestroy(gregorianCalendar, rc=rc)

call ESMF_CalendarDestroy(marsCalendar, rc=rc)

! finalize ESMF framework
call ESMF_Finalize(rc=rc)

end program ESMF_CalendarEx
```

43.4 Restrictions and Future Work

1. **Months per year set to 12.** Due to the requirement of only Earth modeling, the number of months per year is hard-coded at 12. However, for easy modification, this is implemented via a C preprocessor #define MONTHS_PER_YEAR in ESMCI_Calendar.h.
2. **Calendar date conversions.** Date conversions are currently defined between the Gregorian, Julian, Julian Day, and Modified Julian Day calendars. Further research and work would need to be done to determine conversion algorithms with and between the other calendars: No Leap, 360 Day, and Custom.
3. **ESMF_CALKIND_CUSTOM.** Currently, there is no provision for a custom calendar to define a leap year rule, so `ESMF_CalendarIsLeapYear()` will always return `.false.` in this case. However, the arguments `daysPerYear`, `daysPerYearDn`, and `daysPerYearDd` in `ESMF_CalendarCreate()` and `ESMF_CalendarSet()` can be used to set a fractional number of days per year, for example, 365.25 = 365 25/100. Also, if further timekeeping precision is required, fractional and/or floating point `secondsPerDay` and `secondsPerYear` could be added to the interfaces `ESMF_CalendarCreate()`, `ESMF_CalendarSet()`, and `ESMF_CalendarGet()` and implemented.

43.5 Class API

43.5.1 ESMF_CalendarAssignment(=) - Assign a Calendar to another Calendar

INTERFACE:

```
interface assignment(=)
calendar1 = calendar2
```

ARGUMENTS:

```
type(ESMF_Calendar) :: calendar1
type(ESMF_Calendar) :: calendar2
```

STATUS:

- This interface is backward compatible with ESMF versions starting at 5.2.0r. If code using this interface compiles with any version of ESMF starting with 5.2.0r, then it will compile with the current version.

DESCRIPTION:

Assign `calendar1` as an alias to the same `ESMF_Calendar` object in memory as `calendar2`. If `calendar2` is invalid, then `calendar1` will be equally invalid after the assignment.

The arguments are:

calendar1 The `ESMF_Calendar` object on the left hand side of the assignment.

calendar2 The `ESMF_Calendar` object on the right hand side of the assignment.

43.5.2 ESMF_CalendarOperator(==) - Test if Calendar argument 1 is equal to Calendar argument 2

INTERFACE:

```
interface operator(==)
if (<calendar argument 1> == <calendar argument 2>) then ... endif
                              OR
result = (<calendar argument 1> == <calendar argument 2>)
```

RETURN VALUE:

```
logical :: result
```

ARGUMENTS:

```
<calendar argument 1>, see below for supported values
<calendar argument 2>, see below for supported values
```

DESCRIPTION:

Overloads the (==) operator for the `ESMF_Calendar` class. Compare an `ESMF_Calendar` object or `ESMF_CalKind_Flag` with another calendar object or calendar kind for equality. Return `.true.` if equal, `.false.` otherwise. Comparison is based on calendar kind, which is a property of a calendar object.

If both arguments are `ESMF_Calendar` objects, and both are of type `ESMF_CALKIND_CUSTOM`, then all the calendar's properties, except name, are compared.

If both arguments are `ESMF_Calendar` objects, and either of them is not in the `ESMF_INIT_CREATED` status, an error will be logged. However, this does not affect the return value, which is `.true.` when both arguments are in the *same* status, and `.false.` otherwise.

If one argument is an `ESMF_Calendar` object, and the other is an `ESMF_CalKind_Flag`, and the calendar object is not in the `ESMF_INIT_CREATED` status, an error will be logged and `.false.` will be returned.

Supported values for <calendar argument 1> are:

type(ESMF_Calendar), intent(in) :: calendar1

type(ESMF_CalKind_Flag), intent(in) :: calkindflag1

Supported values for <calendar argument 2> are:

type(ESMF_Calendar), intent(in) :: calendar2

type(ESMF_CalKind_Flag), intent(in) :: calkindflag2

The arguments are:

<calendar argument 1> The `ESMF_Calendar` object or `ESMF_CalKind_Flag` on the left hand side of the equality operation.

<calendar argument 2> The `ESMF_Calendar` object or `ESMF_CalKind_Flag` on the right hand side of the equality operation.

43.5.3 ESMF_CalendarOperator(/=) - Test if Calendar argument 1 is not equal to Calendar argument 2

INTERFACE:

```
interface operator(/=)
if (<calendar argument 1> /= <calendar argument 2>) then ... endif
                                OR
result = (<calendar argument 1> /= <calendar argument 2>)
```

RETURN VALUE:

```
logical :: result
```

ARGUMENTS:

```
<calendar argument 1>, see below for supported values
<calendar argument 2>, see below for supported values
```

DESCRIPTION:

Overloads the (/=) operator for the `ESMF_Calendar` class. Compare a `ESMF_Calendar` object or `ESMF_CalKind_Flag` with another calendar object or calendar kind for inequality. Return `.true.` if not equal, `.false.` otherwise. Comparison is based on calendar kind, which is a property of a calendar object.

If both arguments are `ESMF_Calendar` objects, and both are of type `ESMF_CALKIND_CUSTOM`, then all the calendar's properties, except name, are compared.

If both arguments are `ESMF_Calendar` objects, and either of them is not in the `ESMF_INIT_CREATED` status, an error will be logged. However, this does not affect the return value, which is `.true.` when both arguments are *not* in the *same* status, and `.false.` otherwise.

If one argument is an `ESMF_Calendar` object, and the other is an `ESMF_CalKind_Flag`, and the calendar object is not in the `ESMF_INIT_CREATED` status, an error will be logged and `.true.` will be returned.

Supported values for <calendar argument 1> are:

type(ESMF_Calendar), intent(in) :: calendar1

type(ESMF_CalKind_Flag), intent(in) :: calkindflag1

Supported values for <calendar argument 2> are:

type(ESMF_Calendar), intent(in) :: calendar2

type(ESMF_CalKind_Flag), intent(in) :: calkindflag2

The arguments are:

<calendar argument 1> The `ESMF_Calendar` object or `ESMF_CalKind_Flag` on the left hand side of the non-equality operation.

<calendar argument 2> The `ESMF_Calendar` object or `ESMF_CalKind_Flag` on the right hand side of the non-equality operation.

43.5.4 ESMF_CalendarCreate - Create a new ESMF Calendar of built-in type

INTERFACE:

```
! Private name; call using ESMF_CalendarCreate()
function ESMF_CalendarCreateBuiltIn(calkindflag, &
  name, rc)
```

RETURN VALUE:

```
type(ESMF_Calendar) :: ESMF_CalendarCreateBuiltIn
```

ARGUMENTS:

```
      type(ESMF_CalKind_Flag), intent(in)            :: calkindflag
 -- The following arguments require argument keyword syntax (e.g. rc=rc). --
      character (len=*),       intent(in),  optional :: name
      integer,                 intent(out), optional :: rc
```

STATUS:

- This interface is backward compatible with ESMF versions starting at 5.2.0r. If code using this interface compiles with any version of ESMF starting with 5.2.0r, then it will compile with the current version.

DESCRIPTION:

Creates and sets a `calendar` to the given built-in `ESMF_CalKind_Flag`.

The arguments are:

calkindflag The built-in `ESMF_CalKind_Flag`. Valid values are:
`ESMF_CALKIND_360DAY`,
`ESMF_CALKIND_GREGORIAN`,
`ESMF_CALKIND_JULIAN`,
`ESMF_CALKIND_JULIANDAY`,
`ESMF_CALKIND_MODJULIANDAY`,
`ESMF_CALKIND_NOCALENDAR`,
and `ESMF_CALKIND_NOLEAP`.
See Section 43.2 for a description of each calendar kind.

[name] The name for the newly created calendar. If not specified, a default unique name will be generated: "CalendarNNN" where NNN is a unique sequence number from 001 to 999.

[rc] Return code; equals `ESMF_SUCCESS` if there are no errors.

43.5.5 ESMF_CalendarCreate - Create a copy of an ESMF Calendar

INTERFACE:

```
      ! Private name; call using ESMF_CalendarCreate()
      function ESMF_CalendarCreateCopy(calendar, rc)
```

RETURN VALUE:

```
      type(ESMF_Calendar) :: ESMF_CalendarCreateCopy
```

ARGUMENTS:

```
      type(ESMF_Calendar), intent(in)            :: calendar
 -- The following arguments require argument keyword syntax (e.g. rc=rc). --
      integer,             intent(out), optional :: rc
```

STATUS:

- This interface is backward compatible with ESMF versions starting at 5.2.0r. If code using this interface compiles with any version of ESMF starting with 5.2.0r, then it will compile with the current version.

DESCRIPTION:

Creates a complete (deep) copy of a given `ESMF_Calendar`.

The arguments are:

calendar The `ESMF_Calendar` to copy.

[rc] Return code; equals `ESMF_SUCCESS` if there are no errors.

43.5.6 ESMF_CalendarCreate - Create a new custom ESMF Calendar

INTERFACE:

```
! Private name; call using ESMF_CalendarCreate()
function ESMF_CalendarCreateCustom(&
  daysPerMonth, secondsPerDay, &
  daysPerYear, daysPerYearDn, daysPerYearDd, name, rc)
```

RETURN VALUE:

```
type(ESMF_Calendar) :: ESMF_CalendarCreateCustom
```

ARGUMENTS:

```
 -- The following arguments require argument keyword syntax (e.g. rc=rc). --
      integer,                intent(in),  optional :: daysPerMonth(:)
      integer(ESMF_KIND_I4), intent(in),  optional :: secondsPerDay
      integer(ESMF_KIND_I4), intent(in),  optional :: daysPerYear
      integer(ESMF_KIND_I4), intent(in),  optional :: daysPerYearDn
      integer(ESMF_KIND_I4), intent(in),  optional :: daysPerYearDd
      character (len=*),     intent(in),  optional :: name
      integer,                intent(out), optional :: rc
```

DESCRIPTION:

Creates a custom `ESMF_Calendar` and sets its properties.

The arguments are:

[daysPerMonth] Integer array of days per month, for each month of the year. The number of months per year is variable and taken from the size of the array. If unspecified, months per year = 0, with the days array undefined.

[secondsPerDay] Integer number of seconds per day. Defaults to 0 if not specified.

[daysPerYear] Integer number of days per year. Use with daysPerYearDn and daysPerYearDd (see below) to specify a days-per-year calendar for any planetary body. Default = 0.

[daysPerYearDn] Integer numerator portion of fractional number of days per year (daysPerYearDn/daysPerYearDd). Use with daysPerYear (see above) and daysPerYearDd (see below) to specify a days-per-year calendar for any planetary body. Default = 0.

[daysPerYearDd] Integer denominator portion of fractional number of days per year (daysPerYearDn/daysPerYearDd). Use with daysPerYear and daysPerYearDn (see above) to specify a days-per-year calendar for any planetary body. Default = 1.

[name] The name for the newly created calendar. If not specified, a default unique name will be generated: "CalendarNNN" where NNN is a unique sequence number from 001 to 999.

[rc] Return code; equals `ESMF_SUCCESS` if there are no errors.

43.5.7 ESMF_CalendarDestroy - Release resources associated with a Calendar

INTERFACE:

```
      subroutine ESMF_CalendarDestroy(calendar, rc)
```

ARGUMENTS:

```
      type(ESMF_Calendar), intent(inout)          :: calendar
 -- The following arguments require argument keyword syntax (e.g. rc=rc). --
      integer,             intent(out),  optional :: rc
```

STATUS:

- This interface is backward compatible with ESMF versions starting at 5.2.0r. If code using this interface compiles with any version of ESMF starting with 5.2.0r, then it will compile with the current version.

DESCRIPTION:

Releases resources associated with this `ESMF_Calendar`.

The arguments are:

calendar Release resources associated with this `ESMF_Calendar` and mark the object as invalid. It is an error to pass this object into any other routines after being destroyed.

[rc] Return code; equals `ESMF_SUCCESS` if there are no errors.

43.5.8 ESMF_CalendarGet - Get Calendar properties

INTERFACE:

```
subroutine ESMF_CalendarGet(calendar, &
  name, calkindflag, daysPerMonth, monthsPerYear, &
  secondsPerDay, secondsPerYear, &
  daysPerYear, daysPerYearDn, daysPerYearDd, rc)
```

ARGUMENTS:

```
      type(ESMF_Calendar),    intent(in)            :: calendar
 -- The following arguments require argument keyword syntax (e.g. rc=rc). --
      type(ESMF_CalKind_Flag),intent(out), optional :: calkindflag
      integer,                intent(out), optional :: daysPerMonth(:)
      integer,                intent(out), optional :: monthsPerYear
      integer(ESMF_KIND_I4),  intent(out), optional :: secondsPerDay
      integer(ESMF_KIND_I4),  intent(out), optional :: secondsPerYear
      integer(ESMF_KIND_I4),  intent(out), optional :: daysPerYear
      integer(ESMF_KIND_I4),  intent(out), optional :: daysPerYearDn
      integer(ESMF_KIND_I4),  intent(out), optional :: daysPerYearDd
      character (len=*),      intent(out), optional :: name
      integer,                intent(out), optional :: rc
```

STATUS:

- This interface is backward compatible with ESMF versions starting at 5.2.0r. If code using this interface compiles with any version of ESMF starting with 5.2.0r, then it will compile with the current version.

DESCRIPTION:

Gets one or more of an `ESMF_Calendar`'s properties.

The arguments are:

calendar The object instance to query.

[calkindflag] The `CalKind_Flag` ESMF_CALKIND_GREGORIAN, ESMF_CALKIND_JULIAN, etc.

[daysPerMonth] Integer array of days per month, for each month of the year.

[monthsPerYear] Integer number of months per year; the size of the daysPerMonth array.

[secondsPerDay] Integer number of seconds per day.

[secondsPerYear] Integer number of seconds per year.

[daysPerYear] Integer number of days per year. For calendars with intercalations, daysPerYear is the number of days for years without an intercalation. For other calendars, it is the number of days in every year.

[daysPerYearDn] Integer fractional number of days per year (numerator). For calendars with intercalations, daysPerYearDn/daysPerYearDd is the average fractional number of days per year (e.g. 25/100 for Julian 4-year intercalation). For other calendars, it is zero.

[daysPerYearDd] Integer fractional number of days per year (denominator). See daysPerYearDn above.

[name] The name of this calendar.

[rc] Return code; equals `ESMF_SUCCESS` if there are no errors.

43.5.9 ESMF_CalendarIsCreated - Check whether a Calendar object has been created

INTERFACE:

```
function ESMF_CalendarIsCreated(calendar, rc)
```

RETURN VALUE:

```
logical :: ESMF_CalendarIsCreated
```

ARGUMENTS:

```
    type(ESMF_Calendar), intent(in)            :: calendar
 -- The following arguments require argument keyword syntax (e.g. rc=rc). --
    integer,             intent(out), optional :: rc
```

DESCRIPTION:

Return `.true.` if the `calendar` has been created. Otherwise return `.false.`. If an error occurs, i.e. `rc /= ESMF_SUCCESS` is returned, the return value of the function will also be `.false.`.

The arguments are:

calendar `ESMF_Calendar` queried.

[rc] Return code; equals `ESMF_SUCCESS` if there are no errors.

43.5.10 ESMF_CalendarIsLeapYear - Determine if given year is a leap year

INTERFACE:

```
! Private name; call using ESMF_CalendarIsLeapYear()
function ESMF_CalendarIsLeapYear<kind>(calendar, yy, rc)
```

RETURN VALUE:

```
logical :: ESMF_CalendarIsLeapYear<kind>
```

ARGUMENTS:

```
      type(ESMF_Calendar),       intent(in)            :: calendar
      integer(ESMF_KIND_<kind>), intent(in)            :: yy
 -- The following arguments require argument keyword syntax (e.g. rc=rc). --
      integer,                   intent(out), optional :: rc
```

STATUS:

- This interface is backward compatible with ESMF versions starting at 5.2.0r. If code using this interface compiles with any version of ESMF starting with 5.2.0r, then it will compile with the current version.

DESCRIPTION:

Returns `.true.` if the given year is a leap year within the given calendar, and `.false.` otherwise. Custom calendars do not define leap years, so `.false.` will always be returned in this case; see Section 43.4. See also `ESMF_TimeIsLeapYear()`.

The arguments are:

calendar `ESMF_Calendar` to determine leap year within.

yy Year to check for leap year. The type is integer and the <kind> can be either I4 or I8: `ESMF_KIND_I4` or `ESMF_KIND_I8`.

[rc] Return code; equals `ESMF_SUCCESS` if there are no errors.

43.5.11 ESMF_CalendarPrint - Print Calendar information

INTERFACE:

```
      subroutine ESMF_CalendarPrint(calendar, options, rc)
```

ARGUMENTS:

```
      type(ESMF_Calendar), intent(in)            :: calendar
      character (len=*),   intent(in),  optional :: options
      integer,             intent(out), optional :: rc
```

DESCRIPTION:

Prints out an `ESMF_Calendar`'s properties to `stdio`, in support of testing and debugging. The options control the type of information and level of detail.

The arguments are:

calendar `ESMF_Calendar` to be printed out.

[options] Print options. If none specified, prints all calendar property values.
"calkindflag" - print the calendar's type (e.g. ESMF_CALKIND_GREGORIAN).
"daysPerMonth" - print the array of number of days for each month.
"daysPerYear" - print the number of days per year (integer and fractional parts).
"monthsPerYear" - print the number of months per year.
"name" - print the calendar's name.
"secondsPerDay" - print the number of seconds in a day.
"secondsPerYear" - print the number of seconds in a year.

[rc] Return code; equals `ESMF_SUCCESS` if there are no errors.

43.5.12 ESMF_CalendarSet - Set a Calendar to a built-in type

INTERFACE:

```
! Private name; call using ESMF_CalendarSet()
subroutine ESMF_CalendarSetBuiltIn(calendar, calkindflag, &
  name, rc)
```

ARGUMENTS:

```
    type(ESMF_Calendar),     intent(inout)         :: calendar
    type(ESMF_CalKind_Flag), intent(in)            :: calkindflag
-- The following arguments require argument keyword syntax (e.g. rc=rc). --
    character (len=*),       intent(in),  optional :: name
    integer,                 intent(out), optional :: rc
```

STATUS:

- This interface is backward compatible with ESMF versions starting at 5.2.0r. If code using this interface compiles with any version of ESMF starting with 5.2.0r, then it will compile with the current version.

DESCRIPTION:

Sets `calendar` to the given built-in `ESMF_CalKind_Flag`.

The arguments are:

calendar The object instance to initialize.

calkindflag The built-in `CalKind_Flag`. Valid values are:
`ESMF_CALKIND_360DAY`,
`ESMF_CALKIND_GREGORIAN`,
`ESMF_CALKIND_JULIAN`,
`ESMF_CALKIND_JULIANDAY`,

ESMF_CALKIND_MODJULIANDAY,
ESMF_CALKIND_NOCALENDAR,
and ESMF_CALKIND_NOLEAP.
See Section 43.2 for a description of each calendar kind.

[name] The new name for this calendar.

[rc] Return code; equals ESMF_SUCCESS if there are no errors.

43.5.13 ESMF_CalendarSet - Set properties of a custom Calendar

INTERFACE:

```
! Private name; call using ESMF_CalendarSet()
subroutine ESMF_CalendarSetCustom(calendar, &
  daysPerMonth, secondsPerDay, &
  daysPerYear, daysPerYearDn, daysPerYearDd, name, rc)
```

ARGUMENTS:

```
      type(ESMF_Calendar),  intent(inout)         :: calendar
 -- The following arguments require argument keyword syntax (e.g. rc=rc). --
      integer,              intent(in),  optional :: daysPerMonth(:)
      integer(ESMF_KIND_I4),intent(in),  optional :: secondsPerDay
      integer(ESMF_KIND_I4),intent(in),  optional :: daysPerYear
      integer(ESMF_KIND_I4),intent(in),  optional :: daysPerYearDn
      integer(ESMF_KIND_I4),intent(in),  optional :: daysPerYearDd
      character (len=*),    intent(in),  optional :: name
      integer,              intent(out), optional :: rc
```

STATUS:

- This interface is backward compatible with ESMF versions starting at 5.2.0r. If code using this interface compiles with any version of ESMF starting with 5.2.0r, then it will compile with the current version.

DESCRIPTION:

Sets properties in a custom ESMF_Calendar.

The arguments are:

calendar The object instance to initialize.

[daysPerMonth] Integer array of days per month, for each month of the year. The number of months per year is variable and taken from the size of the array. If unspecified, months per year = 0, with the days array undefined.

[secondsPerDay] Integer number of seconds per day. Defaults to 0 if not specified.

[daysPerYear] Integer number of days per year. Use with daysPerYearDn and daysPerYearDd (see below) to specify a days-per-year calendar for any planetary body. Default = 0.

[daysPerYearDn] Integer numerator portion of fractional number of days per year (daysPerYearDn/daysPerYearDd). Use with daysPerYear (see above) and daysPerYearDd (see below) to specify a days-per-year calendar for any planetary body. Default = 0.

[daysPerYearDd] Integer denominator portion of fractional number of days per year (daysPerYearDn/daysPerYearDd). Use with daysPerYear and daysPerYearDn (see above) to specify a days-per-year calendar for any planetary body. Default = 1.

[name] The new name for this calendar.

[rc] Return code; equals `ESMF_SUCCESS` if there are no errors.

43.5.14 ESMF_CalendarSetDefault - Set the default Calendar kind

INTERFACE:

```
! Private name; call using ESMF_CalendarSetDefault()
subroutine ESMF_CalendarSetDefaultKind(calkindflag, rc)
```

ARGUMENTS:

```
type(ESMF_CalKind_Flag), intent(in)            :: calkindflag
integer,                 intent(out), optional :: rc
```

DESCRIPTION:

Sets the default `calendar` to the given type. Subsequent Time Manager operations requiring a calendar where one isn't specified will use the internal calendar of this type.

The arguments are:

calkindflag The calendar kind to be the default.

[rc] Return code; equals `ESMF_SUCCESS` if there are no errors.

43.5.15 ESMF_CalendarSetDefault - Set the default Calendar

INTERFACE:

```
! Private name; call using ESMF_CalendarSetDefault()
subroutine ESMF_CalendarSetDefaultCal(calendar, rc)
```

ARGUMENTS:

```
type(ESMF_Calendar),     intent(in)            :: calendar
integer,                 intent(out), optional :: rc
```

DESCRIPTION:

Sets the default `calendar` to the one given. Subsequent Time Manager operations requiring a calendar where one isn't specified will use this calendar.

The arguments are:

calendar The object instance to be the default.

[rc] Return code; equals `ESMF_SUCCESS` if there are no errors.

43.5.16 ESMF_CalendarValidate - Validate a Calendar's properties

INTERFACE:

```
subroutine ESMF_CalendarValidate(calendar, rc)
```

ARGUMENTS:

```
      type(ESMF_Calendar), intent(in)            :: calendar
 -- The following arguments require argument keyword syntax (e.g. rc=rc). --
      integer,             intent(out), optional :: rc
```

STATUS:

- This interface is backward compatible with ESMF versions starting at 5.2.0r. If code using this interface compiles with any version of ESMF starting with 5.2.0r, then it will compile with the current version.

DESCRIPTION:

Checks whether a `calendar` is valid. Must be one of the defined calendar kinds. daysPerMonth, daysPerYear, secondsPerDay must all be greater than or equal to zero.

The arguments are:

calendar `ESMF_Calendar` to be validated.

[rc] Return code; equals `ESMF_SUCCESS` if there are no errors.

44 Time Class

44.1 Description

A Time represents a specific point in time. In order to accommodate the range of time scales in Earth system applications, Times in the ESMF can be specified in many different ways, from years to nanoseconds. The Time interface is designed so that you select one or more options from a list of time units in order to specify a Time. The options for specifying a Time are shown in Table 42.4.

There are Time methods defined for setting and getting a Time, incrementing and decrementing a Time by a TimeInterval, taking the difference between two Times, and comparing Times. Special quantities such as the middle of the month and the day of the year associated with a particular Time can be retrieved. There is a method for returning the Time value as a string in the ISO 8601 format YYYY-MM-DDThh:mm:ss [24].

A Time that is specified in hours, minutes, seconds, or subsecond intervals does not need to be associated with a standard calendar; a Time whose specification includes time units of a day and greater must be. The ESMF representation of a calendar, the Calendar class, is described in Section 43.1. The `ESMF_TimeSet` method is used to initialize a Time as well as associate it with a Calendar. If a Time method is invoked in which a Calendar is necessary and one has not been set, the ESMF method will return an error condition.

In the ESMF the TimeInterval class is used to represent time periods. This class is frequently used in combination with the Time class. The Clock class, for example, advances model time by incrementing a Time with a TimeInterval.

44.2 Use and Examples

Times are most frequently used to represent start, stop, and current model times. The following examples show how to create, initialize, and manipulate `Time`.

```
! !PROGRAM: ESMF_TimeEx - Time initialization and manipulation examples
!
! !DESCRIPTION:
!
! This program shows examples of Time initialization and manipulation
!-----------------------------------------------------------------------------
#include "ESMF.h"

      ! ESMF Framework module
      use ESMF
      use ESMF_TestMod
      implicit none

      ! instantiate two times
      type(ESMF_Time) :: time1, time2

      type(ESMF_VM) :: vm

      ! instantiate a time interval
      type(ESMF_TimeInterval) :: timeinterval1

      ! local variables for Get methods
      integer :: YY, MM, DD, H, M, S
```

```
! return code
integer:: rc

! initialize ESMF framework
call ESMF_Initialize(vm=vm, defaultCalKind=ESMF_CALKIND_GREGORIAN, &
  defaultlogfilename="TimeEx.Log", &
  logkindflag=ESMF_LOGKIND_MULTI, rc=rc)
```

44.2.1 Time initialization

This example shows how to initialize an `ESMF_Time`.

```
! initialize time1 to 2/28/2000 2:24:45
call ESMF_TimeSet(time1, yy=2000, mm=2, dd=28, h=2, m=24, s=45, rc=rc)

print *, "Time1 = "
call ESMF_TimePrint(time1, options="string", rc=rc)
```

44.2.2 Time increment

This example shows how to increment an `ESMF_Time` by an `ESMF_TimeInterval`.

```
! initialize a time interval to 2 days, 8 hours, 36 minutes, 15 seconds
call ESMF_TimeIntervalSet(timeinterval1, d=2, h=8, m=36, s=15, rc=rc)

print *, "Timeinterval1 = "
call ESMF_TimeIntervalPrint(timeinterval1, options="string", rc=rc)

! increment time1 with timeinterval1
time2 = time1 + timeinterval1

call ESMF_TimeGet(time2, yy=YY, mm=MM, dd=DD, h=H, m=M, s=S, rc=rc)
print *, "time2 = time1 + timeinterval1 = ", YY, "/", MM, "/", DD, &
         " ",  H, ":", M, ":", S
```

44.2.3 Time comparison

This example shows how to compare two `ESMF_Times`.

```
if (time2 > time1) then
  print *, "time2 is larger than time1"
else
  print *, "time1 is smaller than or equal to time2"
endif


! finalize ESMF framework
call ESMF_Finalize(rc=rc)

end program ESMF_TimeEx
```

44.3 Restrictions and Future Work

1. **Limits on size and resolution of Time.** The limits on the size and resolution of the time representation are based on the 64-bit integer types used. For seconds, a signed 64-bit integer will have a range of +/- 2^{63}-1, or +/- 9,223,372,036,854,775,807. This corresponds to a maximum size of +/- (2^{63}-1)/(86400 * 365.25) or +/- 292,271,023,045 years.

   For fractional seconds, a signed 64-bit integer will handle a resolution of +/- 2^{31}-1, or +/- 9,223,372,036,854,775,807 parts of a second.

44.4 Class API

44.4.1 ESMF_TimeAssignment(=) - Assign a Time to another Time

INTERFACE:

```
interface assignment(=)
time1 = time2
```

ARGUMENTS:

```
type(ESMF_Time) :: time1
type(ESMF_Time) :: time2
```

STATUS:

- This interface is backward compatible with ESMF versions starting at 5.2.0r. If code using this interface compiles with any version of ESMF starting with 5.2.0r, then it will compile with the current version.

DESCRIPTION:

Set `time1` equal to `time2`. This is the default Fortran assignment, which creates a complete, independent copy of `time2` as `time1`. If `time2` is an invalid `ESMF_Time` object then `time1` will be equally invalid after the assignment.

The arguments are:

time1 The `ESMF_Time` to be set.

time2 The `ESMF_Time` to be copied.

44.4.2 ESMF_TimeOperator(+) - Increment a Time by a TimeInterval

INTERFACE:

```
interface operator(+)
time2 = time1 + timeinterval
```

RETURN VALUE:

```
type(ESMF_Time) :: time2
```

ARGUMENTS:

```
type(ESMF_Time),         intent(in) :: time1
type(ESMF_TimeInterval), intent(in) :: timeinterval
```

STATUS:

- This interface is backward compatible with ESMF versions starting at 5.2.0r. If code using this interface compiles with any version of ESMF starting with 5.2.0r, then it will compile with the current version.

DESCRIPTION:

Overloads the (+) operator for the `ESMF_Time` class to increment `time1` with `timeinterval` and return the result as an `ESMF_Time`.

The arguments are:

time1 The `ESMF_Time` to increment.

timeinterval The `ESMF_TimeInterval` to add to the given `ESMF_Time`.

44.4.3 ESMF_TimeOperator(-) - Decrement a Time by a TimeInterval

INTERFACE:

```
interface operator(-)
time2 = time1 - timeinterval
```

RETURN VALUE:

```
type(ESMF_Time) :: time2
```

ARGUMENTS:

```
type(ESMF_Time),         intent(in) :: time1
type(ESMF_TimeInterval), intent(in) :: timeinterval
```

STATUS:

- This interface is backward compatible with ESMF versions starting at 5.2.0r. If code using this interface compiles with any version of ESMF starting with 5.2.0r, then it will compile with the current version.

DESCRIPTION:

Overloads the (-) operator for the `ESMF_Time` class to decrement `time1` with `timeinterval`, and return the result as an `ESMF_Time`.

The arguments are:

time1 The `ESMF_Time` to decrement.

timeinterval The `ESMF_TimeInterval` to subtract from the given `ESMF_Time`.

44.4.4 ESMF_TimeOperator(-) - Return the difference between two Times

INTERFACE:

```
interface operator(-)
timeinterval = time1 - time2
```

RETURN VALUE:

```
type(ESMF_TimeInterval) :: timeinterval
```

ARGUMENTS:

```
type(ESMF_Time),          intent(in) :: time1
type(ESMF_Time),          intent(in) :: time2
```

STATUS:

- This interface is backward compatible with ESMF versions starting at 5.2.0r. If code using this interface compiles with any version of ESMF starting with 5.2.0r, then it will compile with the current version.

DESCRIPTION:

Overloads the (-) operator for the `ESMF_Time` class to return the difference between `time1` and `time2` as an `ESMF_TimeInterval`. It is assumed that `time1` is later than `time2`; if not, the resulting `ESMF_TimeInterval` will have a negative value.

The arguments are:

time1 The first `ESMF_Time` in comparison.

time2 The second `ESMF_Time` in comparison.

44.4.5 ESMF_TimeOperator(==) - Test if Time 1 is equal to Time 2

INTERFACE:

```
interface operator(==)
if (time1 == time2) then ... endif
             OR
result = (time1 == time2)
```

RETURN VALUE:

```
logical :: result
```

ARGUMENTS:

```
type(ESMF_Time), intent(in) :: time1
type(ESMF_Time), intent(in) :: time2
```

STATUS:

- This interface is backward compatible with ESMF versions starting at 5.2.0r. If code using this interface compiles with any version of ESMF starting with 5.2.0r, then it will compile with the current version.

DESCRIPTION:

Overloads the (==) operator for the `ESMF_Time` class to return `.true.` if `time1` and `time2` represent the same instant in time, and `.false.` otherwise.

The arguments are:

time1 First `ESMF_Time` in comparison.

time2 Second `ESMF_Time` in comparison.

44.4.6 ESMF_TimeOperator(/=) - Test if Time 1 is not equal to Time 2

INTERFACE:

```
interface operator(/=)
if (time1 /= time2) then ... endif
             OR
result = (time1 /= time2)
```

RETURN VALUE:

```
logical :: result
```

ARGUMENTS:

```
type(ESMF_Time), intent(in) :: time1
type(ESMF_Time), intent(in) :: time2
```

STATUS:

- This interface is backward compatible with ESMF versions starting at 5.2.0r. If code using this interface compiles with any version of ESMF starting with 5.2.0r, then it will compile with the current version.

DESCRIPTION:

Overloads the (/=) operator for the `ESMF_Time` class to return `.true.` if `time1` and `time2` do not represent the same instant in time, and `.false.` otherwise.

The arguments are:

time1 First `ESMF_Time` in comparison.

time2 Second `ESMF_Time` in comparison.

44.4.7 ESMF_TimeOperator(<) - Test if Time 1 is less than Time 2

INTERFACE:

```
interface operator(<)
if (time1 < time2) then ... endif
             OR
result = (time1 < time2)
```

RETURN VALUE:

```
logical :: result
```

ARGUMENTS:

```
type(ESMF_Time), intent(in) :: time1
type(ESMF_Time), intent(in) :: time2
```

STATUS:

- This interface is backward compatible with ESMF versions starting at 5.2.0r. If code using this interface compiles with any version of ESMF starting with 5.2.0r, then it will compile with the current version.

DESCRIPTION:

Overloads the (<) operator for the `ESMF_Time` class to return `.true.` if `time1` is earlier in time than `time2`, and `.false.` otherwise.

The arguments are:

time1 First `ESMF_Time` in comparison.

time2 Second `ESMF_Time` in comparison.

44.4.8 ESMF_TimeOperator(<=) - Test if Time 1 is less than or equal to Time 2

INTERFACE:

```
interface operator(<=)
if (time1 <= time2) then ... endif
             OR
result = (time1 <= time2)
```

RETURN VALUE:

```
logical :: result
```

ARGUMENTS:

```
type(ESMF_Time), intent(in) :: time1
type(ESMF_Time), intent(in) :: time2
```

STATUS:

- This interface is backward compatible with ESMF versions starting at 5.2.0r. If code using this interface compiles with any version of ESMF starting with 5.2.0r, then it will compile with the current version.

DESCRIPTION:

Overloads the (<=) operator for the `ESMF_Time` class to return `.true.` if `time1` is earlier in time or the same time as `time2`, and `.false.` otherwise.

The arguments are:

time1 First `ESMF_Time` in comparison.

time2 Second `ESMF_Time` in comparison.

44.4.9 ESMF_TimeOperator(>) - Test if Time 1 is greater than Time 2

INTERFACE:

```
interface operator(>)
if (time1 > time2) then ... endif
             OR
result = (time1 > time2)
```

RETURN VALUE:

```
logical :: result
```

ARGUMENTS:

```
type(ESMF_Time), intent(in) :: time1
type(ESMF_Time), intent(in) :: time2
```

STATUS:

- This interface is backward compatible with ESMF versions starting at 5.2.0r. If code using this interface compiles with any version of ESMF starting with 5.2.0r, then it will compile with the current version.

DESCRIPTION:

Overloads the (>) operator for the `ESMF_Time` class to return `.true.` if `time1` is later in time than `time2`, and `.false.` otherwise.

The arguments are:

time1 First `ESMF_Time` in comparison.

time2 Second `ESMF_Time` in comparison.

44.4.10 ESMF_TimeOperator(>=) - Test if Time 1 is greater than or equal to Time 2

INTERFACE:

```
interface operator(>=)
if (time1 >= time2) then ... endif
             OR
result = (time1 >= time2)
```

RETURN VALUE:

```
logical :: result
```

ARGUMENTS:

```
type(ESMF_Time), intent(in) :: time1
type(ESMF_Time), intent(in) :: time2
```

STATUS:

- This interface is backward compatible with ESMF versions starting at 5.2.0r. If code using this interface compiles with any version of ESMF starting with 5.2.0r, then it will compile with the current version.

DESCRIPTION:

Overloads the (>=) operator for the `ESMF_Time` class to return `.true.` if `time1` is later in time or the same time as `time2`, and `.false.` otherwise.

The arguments are:

time1 First `ESMF_Time` in comparison.

time2 Second `ESMF_Time` in comparison.

44.4.11 ESMF_TimeGet - Get a Time value

INTERFACE:

```
subroutine ESMF_TimeGet(time, &
  yy, yy_i8, &
  mm, dd, &
  d, d_i8, &
  h, m, &
  s, s_i8, &
  ms, us, ns, &
  d_r8, h_r8, m_r8, s_r8, &
  ms_r8, us_r8, ns_r8, &
  sN, sN_i8, sD, sD_i8, &
  calendar, calkindflag, timeZone, &
  timeString, timeStringISOFrac, &
  dayOfWeek, midMonth, &
  dayOfYear,  dayOfYear_r8, &
  dayOfYear_intvl, rc)
```

ARGUMENTS:

```
      type(ESMF_Time),         intent(in)            :: time
 -- The following arguments require argument keyword syntax (e.g. rc=rc). --
      integer(ESMF_KIND_I4),   intent(out), optional :: yy
      integer(ESMF_KIND_I8),   intent(out), optional :: yy_i8
      integer,                 intent(out), optional :: mm
      integer,                 intent(out), optional :: dd
      integer(ESMF_KIND_I4),   intent(out), optional :: d
      integer(ESMF_KIND_I8),   intent(out), optional :: d_i8
      integer(ESMF_KIND_I4),   intent(out), optional :: h
      integer(ESMF_KIND_I4),   intent(out), optional :: m
      integer(ESMF_KIND_I4),   intent(out), optional :: s
      integer(ESMF_KIND_I8),   intent(out), optional :: s_i8
      integer(ESMF_KIND_I4),   intent(out), optional :: ms
      integer(ESMF_KIND_I4),   intent(out), optional :: us
      integer(ESMF_KIND_I4),   intent(out), optional :: ns
      real(ESMF_KIND_R8),      intent(out), optional :: d_r8
```

```
real(ESMF_KIND_R8),      intent(out), optional :: h_r8
real(ESMF_KIND_R8),      intent(out), optional :: m_r8
real(ESMF_KIND_R8),      intent(out), optional :: s_r8
real(ESMF_KIND_R8),      intent(out), optional :: ms_r8
real(ESMF_KIND_R8),      intent(out), optional :: us_r8
real(ESMF_KIND_R8),      intent(out), optional :: ns_r8
integer(ESMF_KIND_I4),   intent(out), optional :: sN
integer(ESMF_KIND_I8),   intent(out), optional :: sN_i8
integer(ESMF_KIND_I4),   intent(out), optional :: sD
integer(ESMF_KIND_I8),   intent(out), optional :: sD_i8
type(ESMF_Calendar),     intent(out), optional :: calendar
type(ESMF_CalKind_Flag), intent(out), optional :: calkindflag
integer,                 intent(out), optional :: timeZone ! not imp
character (len=*),       intent(out), optional :: timeString
character (len=*),       intent(out), optional :: timeStringISOFrac
integer,                 intent(out), optional :: dayOfWeek
type(ESMF_Time),         intent(out), optional :: midMonth
integer(ESMF_KIND_I4),   intent(out), optional :: dayOfYear
real(ESMF_KIND_R8),      intent(out), optional :: dayOfYear_r8
type(ESMF_TimeInterval), intent(out), optional :: dayOfYear_intvl
integer,                 intent(out), optional :: rc
```

STATUS:

- This interface is backward compatible with ESMF versions starting at 5.2.0r. If code using this interface compiles with any version of ESMF starting with 5.2.0r, then it will compile with the current version.

DESCRIPTION:

Gets the value of `time` in units specified by the user via Fortran optional arguments. See `ESMF_TimeSet()` above for a description of time units and calendars.

The ESMF Time Manager represents and manipulates time internally with integers to maintain precision. Hence, user-specified floating point values are converted internally from integers. For example, if a time value is 5 and 3/8 seconds (s=5, sN=3, sD=8), and you want to get it as floating point seconds, you would get 5.375 (s_r8=5.375).

Units are bound (normalized) by the next larger unit specified. For example, if a time is defined to be 2:00 am on February 2, 2004, then `ESMF_TimeGet(dd=day, h=hours, s=seconds)` would return `day = 2`, `hours = 2`, `seconds = 0`, whereas `ESMF_TimeGet(dd = day, s=seconds)` would return `day = 2`, `seconds = 7200`. Note that `hours` and `seconds` are bound by a day. If bound by a month, `ESMF_TimeGet(mm=month, h=hours, s=seconds)` would return `month = 2`, `hours = 26`, `seconds = 0`, and `ESMF_TimeGet(mm = month, s=seconds)` would return `month = 2`, `seconds = 93600` (26 * 3600). Similarly, if bound to a year, `ESMF_TimeGet(yy=year, h=hours, s=seconds)` would return `year = 2004`, `hours = 770` (32*24 + 2), `seconds = 0`, and `ESMF_TimeGet(yy = year, s=seconds)` would return `year = 2004`, `seconds = 2772000` (770 * 3600).

However, double precision time units are not considered in this normalization: Double precision time units are still bound by units of a day or larger, but double precision time units of an hour or smaller neither bind nor are bound by other time units of an hour or smaller (either integer or double precision). For example, with the same time setting as above (2:00 am on February 2, 2004), `ESMF_TimeGet(dd=day, h_r8=hours_r8, s=seconds)` would return `day = 2`, `hours_r8 = 2.0`, `seconds = 7200`, and `ESMF_TimeGet(dd=day, h=hours, s_r8=seconds_r8)` would return `day = 2`, `hours = 2`, `seconds_r8 = 7200.0`.

For `timeString`, `timeStringISOFrac`, `dayOfWeek`, `midMonth`, `dayOfYear`, `dayOfYear_intvl`, and `dayOfYear_r8` described below, valid calendars are Gregorian, Julian, No Leap, 360 Day and Custom calendars.

Not valid for Julian Day, Modified Julian Day, or No Calendar.

For `timeString` and `timeStringISOFrac`, YYYY format returns at least 4 digits; years <= 999 are padded on the left with zeroes and years >= 10000 return the number of digits required.

For timeString, convert `ESMF_Time`'s value into partial ISO 8601 format YYYY-MM-DDThh:mm:ss[:n/d]. See [24] and [14]. See also method `ESMF_TimePrint()`.

For timeStringISOFrac, convert `ESMF_Time`'s value into full ISO 8601 format YYYY-MM-DDThh:mm:ss[.f]. See [24] and [14]. See also method `ESMF_TimePrint()`.

For dayOfWeek, gets the day of the week the given `ESMF_Time` instant falls on. ISO 8601 standard: Monday = 1 through Sunday = 7. See [24] and [14].

For midMonth, gets the middle time instant of the month that the given `ESMF_Time` instant falls on.

For dayOfYear, gets the day of the year that the given `ESMF_Time` instant falls on. See range discussion in argument list below. Return as an integer value.

For dayOfYear_r8, gets the day of the year the given `ESMF_Time` instant falls on. See range discussion in argument list below. Return as floating point value; fractional part represents the time of day.

For dayOfYear_intvl, gets the day of the year the given `ESMF_Time` instant falls on. Return as an `ESMF_TimeInterval`.

The arguments are:

time The object instance to query.

[yy] Integer year (32-bit).

[yy_i8] Integer year (large, 64-bit).

[mm] Integer month.

[dd] Integer day of the month.

[d] Integer Julian date, or Modified Julian date (32-bit).

[d_i8] Integer Julian date, or Modified Julian date (large, 64-bit).

[h] Integer hour.

[m] Integer minute.

[s] Integer second (32-bit).

[s_i8] Integer second (large, 64-bit).

[ms] Integer millisecond.

[us] Integer microsecond.

[ns] Integer nanosecond.

[d_r8] Double precision day.

[h_r8] Double precision hour.

[m_r8] Double precision minute.

[s_r8] Double precision second.

[ms_r8] Double precision millisecond.

[us_r8] Double precision microsecond.

[ns_r8] Double precision nanosecond.

[sN] Integer numerator of fractional second (sN/sD).

[sN_i8] Integer numerator of fractional second (sN_i8/sD_i8) (large, <= 64-bit).

[sD] Integer denominator of fractional second (sN/sD).

[sD_i8] Integer denominator of fractional second (sN_i8/sD_i8) (large, <= 64-bit).

[calendar] Associated `Calendar`.

[calkindflag] Associated `CalKind_Flag`.

[timeZone] Associated timezone (hours offset from UCT, e.g. EST = -5). (Not implemented yet).

[timeString] Convert time value to format string YYYY-MM-DDThh:mm:ss[:n/d], where n/d is numerator/denominator of any fractional seconds and all other units are in ISO 8601 format. See [24] and [14]. See also method `ESMF_TimePrint()`.

[timeStringISOFrac] Convert time value to strict ISO 8601 format string YYYY-MM-DDThh:mm:ss[.f], where f is decimal form of any fractional seconds. See [24] and [14]. See also method `ESMF_TimePrint()`.

[dayOfWeek] The time instant's day of the week [1-7].

[MidMonth] The given time instant's middle-of-the-month time instant.

[dayOfYear] The `ESMF_Time` instant's integer day of the year. [1-366] for Gregorian and Julian calendars, [1-365] for No-Leap calendar. [1-360] for 360-Day calendar. User-defined range for Custom calendar.

[dayOfYear_r8] The `ESMF_Time` instant's floating point day of the year. [1.x-366.x] for Gregorian and Julian calendars, [1.x-365.x] for No-Leap calendar. [1.x-360.x] for 360-Day calendar. User-defined range for Custom calendar.

[dayOfYear_intvl] The `ESMF_Time` instant's day of the year as an `ESMF_TimeInterval`.

[rc] Return code; equals `ESMF_SUCCESS` if there are no errors.

44.4.12 ESMF_TimeIsLeapYear - Determine if a Time is in a leap year

INTERFACE:

```
function ESMF_TimeIsLeapYear(time, rc)
```

RETURN VALUE:

```
logical :: ESMF_TimeIsLeapYear
```

ARGUMENTS:

```
      type(ESMF_Time), intent(in)            :: time
 -- The following arguments require argument keyword syntax (e.g. rc=rc). --
      integer,         intent(out), optional :: rc
```

STATUS:

- This interface is backward compatible with ESMF versions starting at 5.2.0r. If code using this interface compiles with any version of ESMF starting with 5.2.0r, then it will compile with the current version.

DESCRIPTION:

Returns `.true.` if given time is in a leap year, and `.false.` otherwise. See also `ESMF_CalendarIsLeapYear()`.

The arguments are:

time The `ESMF_Time` to check for leap year.

[rc] Return code; equals `ESMF_SUCCESS` if there are no errors.

44.4.13 ESMF_TimeIsSameCalendar - Compare Calendars of two Times

INTERFACE:

```
      function ESMF_TimeIsSameCalendar(time1, time2, rc)
```

RETURN VALUE:

```
      logical :: ESMF_TimeIsSameCalendar
```

ARGUMENTS:

```
      type(ESMF_Time), intent(in)            :: time1
      type(ESMF_Time), intent(in)            :: time2
 -- The following arguments require argument keyword syntax (e.g. rc=rc). --
      integer,         intent(out), optional :: rc
```

STATUS:

- This interface is backward compatible with ESMF versions starting at 5.2.0r. If code using this interface compiles with any version of ESMF starting with 5.2.0r, then it will compile with the current version.

DESCRIPTION:

Returns `.true.` if the Calendars in these Times are the same, `.false.` otherwise.

The arguments are:

time1 The first `ESMF_Time` in comparison.

time2 The second `ESMF_Time` in comparison.

[rc] Return code; equals `ESMF_SUCCESS` if there are no errors.

44.4.14 ESMF_TimePrint - Print Time information

INTERFACE:

```
      subroutine ESMF_TimePrint(time, options, preString, unit, rc)
```

ARGUMENTS:

```
      type(ESMF_Time),   intent(in)            :: time
 -- The following arguments require argument keyword syntax (e.g. rc=rc). --
      character (len=*), intent(in),  optional :: options
      character(*),      intent(in),  optional :: preString
      character(*),      intent(out), optional :: unit
      integer,           intent(out), optional :: rc
```

DESCRIPTION:

Prints out the contents of an `ESMF_Time` to `stdout`, in support of testing and debugging. The options control the type of information and level of detail. For options "string" and "string isofrac", YYYY format returns at least 4 digits; years <= 999 are padded on the left with zeroes and years >= 10000 return the number of digits required.

The arguments are:

time The `ESMF_Time` to be printed out.

[options] Print options. If none specified, prints all Time property values.
"string" - prints `time`'s value in ISO 8601 format for all units through seconds. For any non-zero fractional seconds, prints in integer rational fraction form n/d. Format is YYYY-MM-DDThh:mm:ss[:n/d], where [:n/d] is the integer numerator and denominator of the fractional seconds value, if present. See [24] and [14]. See also method `ESMF_TimeGet(..., timeString= , ...)`
"string isofrac" - prints `time`'s value in strict ISO 8601 format for all units, including any fractional seconds part. Format is YYYY-MM-DDThh:mm:ss[.f] where [.f] represents fractional seconds in decimal form, if present. See [24] and [14]. See also method `ESMF_TimeGet(..., timeStringISOFrac= , ...)`

[preString] Optionally prepended string. Default to empty string.

[unit] Internal unit, i.e. a string. Default to printing to stdout.

[rc] Return code; equals `ESMF_SUCCESS` if there are no errors.

44.4.15 ESMF_TimeSet - Initialize or set a Time

INTERFACE:

```
! Private name; call using ESMF_TimeSet()
    subroutine ESMF_TimeSetDefault(time, &
      yy, yy_i8, &
      mm, dd, &
      d, d_i8, &
      h, m, &
      s, s_i8, &
      ms, us, ns, &
      d_r8, h_r8, m_r8, s_r8, &
      ms_r8, us_r8, ns_r8, &
      sN, sN_i8, sD, sD_i8, &
      calendar, calkindflag, &
      timeZone, rc)
```

ARGUMENTS:

```
      type(ESMF_Time),         intent(inout)         :: time
 -- The following arguments require argument keyword syntax (e.g. rc=rc). --
      integer(ESMF_KIND_I4),   intent(in),  optional :: yy
      integer(ESMF_KIND_I8),   intent(in),  optional :: yy_i8
      integer,                 intent(in),  optional :: mm
      integer,                 intent(in),  optional :: dd
      integer(ESMF_KIND_I4),   intent(in),  optional :: d
      integer(ESMF_KIND_I8),   intent(in),  optional :: d_i8
      integer(ESMF_KIND_I4),   intent(in),  optional :: h
      integer(ESMF_KIND_I4),   intent(in),  optional :: m
      integer(ESMF_KIND_I4),   intent(in),  optional :: s
      integer(ESMF_KIND_I8),   intent(in),  optional :: s_i8
      integer(ESMF_KIND_I4),   intent(in),  optional :: ms
      integer(ESMF_KIND_I4),   intent(in),  optional :: us
      integer(ESMF_KIND_I4),   intent(in),  optional :: ns
      real(ESMF_KIND_R8),      intent(in),  optional :: d_r8
      real(ESMF_KIND_R8),      intent(in),  optional :: h_r8
      real(ESMF_KIND_R8),      intent(in),  optional :: m_r8
      real(ESMF_KIND_R8),      intent(in),  optional :: s_r8
      real(ESMF_KIND_R8),      intent(in),  optional :: ms_r8
      real(ESMF_KIND_R8),      intent(in),  optional :: us_r8
      real(ESMF_KIND_R8),      intent(in),  optional :: ns_r8
      integer(ESMF_KIND_I4),   intent(in),  optional :: sN
      integer(ESMF_KIND_I8),   intent(in),  optional :: sN_i8
```

```
integer(ESMF_KIND_I4),   intent(in),  optional :: sD
integer(ESMF_KIND_I8),   intent(in),  optional :: sD_i8
type(ESMF_Calendar),     intent(in),  optional :: calendar
type(ESMF_CalKind_Flag), intent(in),  optional :: calkindflag
integer,                 intent(in),  optional :: timeZone ! not imp
integer,                 intent(out), optional :: rc
```

STATUS:

- This interface is backward compatible with ESMF versions starting at 5.2.0r. If code using this interface compiles with any version of ESMF starting with 5.2.0r, then it will compile with the current version.

DESCRIPTION:

Initializes an `ESMF_Time` with a set of user-specified units via Fortran optional arguments.

The range of valid values for mm and dd depend on the calendar used. For Gregorian, Julian, and No-Leap calendars, mm is [1-12] and dd is [1-28,29,30, or 31], depending on the value of mm and whether yy or yy_i8 is a leap year. For the 360-day calendar, mm is [1-12] and dd is [1-30]. For Julian Day, Modified Julian Day, and No-Calendar, yy, yy_i8, mm, and dd are invalid inputs, since these calendars do not define them. When valid, the yy and yy_i8 arguments should be fully specified, e.g. 2003 instead of 03. yy and yy_i8 ranges are only limited by machine word size, except for the Gregorian and Julian calendars, where the lowest (proleptic) date limits are 3/1/-4800 and 3/1/-4712, respectively. This is a limitation of the Gregorian date-to-Julian day and Julian date-to-Julian day conversion algorithms used to convert Gregorian and Julian dates to the internal representation of seconds. See [21] for a description of the Gregorian date-to-Julian day algorithm and [23] for a description of the Julian date-to-Julian day algorithm. The Custom calendar will have user-defined values for yy, yy_i8, mm, and dd.

The Julian day specifier, d or d_i8, can only be used with the Julian Day and Modified Julian Day calendars, and has a valid range depending on the word size. For a signed 32-bit d, the range for Julian day is [+/- 24855]. For a signed 64-bit d_i8, the valid range for Julian day is [+/- 106,751,991,167,300]. The Julian day number system adheres to the conventional standard where the reference day of d=0 corresponds to 11/24/-4713 in the proleptic Gregorian calendar and 1/1/-4712 in the proleptic Julian calendar. See [27] and [12].

The Modified Julian Day system, introduced by space scientists in the late 1950's, is defined as Julian Day - 2400000.5. See [31].

Note that d and d_i8 are not valid for the No-Calendar. To remain consistent with non-Earth calendars added to ESMF in the future, ESMF requires a calendar to be planet-specific. Hence the No-Calendar does not know what a day is; it cannot assume an Earth day of 86400 seconds.

Hours, minutes, seconds, and sub-seconds can be used with any calendar, since they are standardized units that are the same for any planet.

Time manager represents and manipulates time internally with integers to maintain precision. Hence, user-specified floating point values are converted internally to integers. Sub-second values are represented internally with an integer numerator and denominator fraction (sN/sD). The smallest required resolution is nanoseconds (denominator). For example, pi can be represented as s=3, sN=141592654, sD=1000000000. However, via sN_i8 and sD_i8, larger values can be used. If specifying a constant floating point value, be sure to provide at least 16 digits to take full advantage of double precision, for example s_r8=2.718281828459045d0 for 'e' seconds.

The arguments are:

time The object instance to initialize.

[yy] Integer year (32-bit). Default = 0.

[yy_i8] Integer year (large, 64-bit). Default = 0.

[mm] Integer month. Default = 1.

[dd] Integer day of the month. Default = 1.

[d] Integer Julian Day, or Modified Julian Day (32-bit). Must not be specified with Gregorian calendars. Default = 0.

[d_i8] Integer Julian Day, or Modified Julian Day (large, 64-bit). Must not be specified with Gregorian calendars. Default = 0.

[h] Integer hour. Default = 0.

[m] Integer minute. Default = 0.

[s] Integer second (32-bit). Default = 0.

[s_i8] Integer second (large, 64-bit). Default = 0.

[ms] Integer millisecond. Default = 0.

[us] Integer microsecond. Default = 0.

[ns] Integer nanosecond. Default = 0.

[d_r8] Double precision day. Default = 0.0.

[h_r8] Double precision hour. Default = 0.0.

[m_r8] Double precision minute. Default = 0.0.

[s_r8] Double precision second. Default = 0.0.

[ms_r8] Double precision millisecond. Default = 0.0.

[us_r8] Double precision microsecond. Default = 0.0.

[ns_r8] Double precision nanosecond. Default = 0.0.

[sN] Integer numerator of fractional second (sN/sD). Default = 0.

[sN_i8] Integer numerator of fractional second (sN_i8/sD_i8) (large, 64-bit). Default = 0.

[sD] Integer denominator of fractional second (sN/sD). Default = 1.

[sD_i8] Integer denominator of fractional second (sN_i8/sD_i8) (large, 64-bit). Default = 1.

[calendar] Associated `Calendar`. Defaults to calendar `ESMF_CALKIND_NOCALENDAR` or default specified in `ESMF_Initialize()` or `ESMF_CalendarSetDefault()`. Alternate to, and mutually exclusive with, calkindflag below. Primarily for specifying a custom calendar kind.

[calkindflag] Alternate to, and mutually exclusive with, calendar above. More convenient way of specifying a built-in calendar kind.

[timeZone] Associated timezone (hours offset from UTC, e.g. EST = -5). Default = 0 (UTC). (Not implemented yet).

[rc] Return code; equals `ESMF_SUCCESS` if there are no errors.

44.4.16 ESMF_TimeSet - Initialize or set a Time from ISO format string

INTERFACE:

```
! Private name; call using ESMF_TimeSet()
    subroutine ESMF_TimeSetString(time, timeString, rc)
```

ARGUMENTS:

```
    type(ESMF_Time),          intent(inout)          :: time
    character(*),             intent(in)             :: timeString
    integer,                  intent(out), optional  :: rc
```

DESCRIPTION:

Initializes an `ESMF_Time` with a set of user-specified string.

The arguments are:

time The object instance to initialize.

timeString ISO format time string. E.g. 2012-10-24T18:00:00.

[rc] Return code; equals `ESMF_SUCCESS` if there are no errors.

44.4.17 ESMF_TimeSyncToRealTime - Get system real time (wall clock time)

INTERFACE:

```
    subroutine ESMF_TimeSyncToRealTime(time, rc)
```

ARGUMENTS:

```
    type(ESMF_Time), intent(inout) :: time
-- The following arguments require argument keyword syntax (e.g. rc=rc). --
    integer, intent(out), optional :: rc
```

STATUS:

- This interface is backward compatible with ESMF versions starting at 5.2.0r. If code using this interface compiles with any version of ESMF starting with 5.2.0r, then it will compile with the current version.

DESCRIPTION:

Gets the system real time (wall clock time), and returns it as an `ESMF_Time`. Accurate to the nearest second.

The arguments are:

time The object instance to receive the real time.

[rc] Return code; equals `ESMF_SUCCESS` if there are no errors.

44.4.18 ESMF_TimeValidate - Validate a Time

INTERFACE:

```
subroutine ESMF_TimeValidate(time, options, rc)
```

ARGUMENTS:

```
type(ESMF_Time),   intent(in)            :: time
character (len=*), intent(in),  optional :: options
integer,           intent(out), optional :: rc
```

DESCRIPTION:

Checks whether an `ESMF_Time` is valid. Must be a valid date/time on a valid calendar. The options control the type of validation.

The arguments are:

time `ESMF_Time` instant to be validated.

[options] Validation options. If none specified, validates all `time` property values.
"calendar" - validate only the `time`'s calendar.
"timezone" - validate only the `time`'s timezone.

[rc] Return code; equals `ESMF_SUCCESS` if there are no errors.

45 TimeInterval Class

45.1 Description

A TimeInterval represents a period between time instants. It can be either positive or negative. Like the Time interface, the TimeInterval interface is designed so that you can choose one or more options from a list of time units in order to specify a TimeInterval. See Section 42.3, Table 42.4 for the available options.

There are TimeInterval methods defined for setting and getting a TimeInterval, for incrementing and decrementing a TimeInterval by another TimeInterval, and for multiplying and dividing TimeIntervals by integers, reals, fractions and other TimeIntervals. Methods are also defined to take the absolute value and negative absolute value of a TimeInterval, and for comparing the length of two TimeIntervals.

The class used to represent time instants in ESMF is Time, and this class is frequently used in operations along with TimeIntervals. For example, the difference between two Times is a TimeInterval.

When a TimeInterval is used in calculations that involve an absolute reference time, such as incrementing a Time with a TimeInterval, calendar dependencies may be introduced. The length of the time period that the TimeInterval represents will depend on the reference Time and the standard calendar that is associated with it. The calendar dependency becomes apparent when, for example, adding a TimeInterval of 1 day to the Time of February 28, 1996, at 4:00pm EST. In a 360 day calendar, the resulting date would be February 29, 1996, at 4:00pm EST. In a no-leap calendar, the result would be March 1, 1996, at 4:00pm EST.

TimeIntervals are used by other parts of the ESMF timekeeping system, such as Clocks (Section 46.1) and Alarms (Section 47.1).

45.2 Use and Examples

A typical use for a TimeInterval in a geophysical model is representation of the time step by which the model is advanced. Some models change the size of their time step as the model run progresses; this could be done by incrementing or decrementing the original time step by another TimeInterval, or by dividing or multiplying the time step by an integer value. An example of advancing model time using a TimeInterval representation of a time step is shown in Section 46.1.

The following brief example shows how to create, initialize and manipulate `TimeInterval`.

```
! !PROGRAM: ESMF_TimeIntervalEx - Time Interval initialization and
!                                 manipulation examples
!
! !DESCRIPTION:
!
! This program shows examples of Time Interval initialization and manipulation
!-----------------------------------------------------------------------------
#include "ESMF.h"

      ! ESMF Framework module
      use ESMF
      use ESMF_TestMod
      implicit none

      ! instantiate some time intervals
      type(ESMF_TimeInterval) :: timeinterval1, timeinterval2, timeinterval3
```

```
! local variables
integer :: d, h, m, s

! return code
integer:: rc

! initialize ESMF framework
call ESMF_Initialize(defaultCalKind=ESMF_CALKIND_GREGORIAN, &
  defaultlogfilename="TimeIntervalEx.Log", &
              logkindflag=ESMF_LOGKIND_MULTI, rc=rc)
```

45.2.1 TimeInterval initialization

This example shows how to initialize two `ESMF_TimeIntervals`.

```
! initialize time interval1 to 1 day
call ESMF_TimeIntervalSet(timeinterval1, d=1, rc=rc)

call ESMF_TimeIntervalPrint(timeinterval1, options="string", rc=rc)

! initialize time interval2 to 4 days, 1 hour, 30 minutes, 10 seconds
call ESMF_TimeIntervalSet(timeinterval2, d=4, h=1, m=30, s=10, rc=rc)

call ESMF_TimeIntervalPrint(timeinterval2, options="string", rc=rc)
```

45.2.2 TimeInterval conversion

This example shows how to convert `ESMF_TimeIntervals` into different units.

```
call ESMF_TimeIntervalGet(timeinterval1, s=s, rc=rc)
print *, "Time Interval1 = ", s, " seconds."

call ESMF_TimeIntervalGet(timeinterval2, h=h, m=m, s=s, rc=rc)
print *, "Time Interval2 = ", h, " hours, ", m, " minutes, ", &
                              s, " seconds."
```

45.2.3 TimeInterval difference

This example shows how to calculate the difference between two `ESMF_TimeIntervals`.

```
 ! difference between two time intervals
 timeinterval3 = timeinterval2 - timeinterval1
call ESMF_TimeIntervalGet(timeinterval3, d=d, h=h, m=m, s=s, rc=rc)
print *, "Difference between TimeInterval2 and TimeInterval1 = ", &
      d, " days, ", h, " hours, ", m, " minutes, ", s, " seconds."
```

45.2.4 TimeInterval multiplication

This example shows how to multiply an `ESMF_TimeInterval`.

```
! multiply time interval by an integer
timeinterval3 = timeinterval2 * 3
call ESMF_TimeIntervalGet(timeinterval3, d=d, h=h, m=m, s=s, rc=rc)
print *, "TimeInterval2 multiplied by 3 = ", d, " days, ", h, &
         " hours, ", m, " minutes, ", s, " seconds."
```

45.2.5 TimeInterval comparison

This example shows how to compare two `ESMF_TimeIntervals`.

```
! comparison
if (timeinterval1 < timeinterval2) then
  print *, "TimeInterval1 is smaller than TimeInterval2"
else
  print *, "TimeInterval1 is larger than or equal to TimeInterval2"
end if


end program ESMF_TimeIntervalEx
```

45.3 Restrictions and Future Work

1. **Limits on time span.** The limits on the time span that can be represented are based on the 64-bit integer types used. For seconds, a signed 64-bit integer will have a range of +/- 2^{63}-1, or +/- 9,223,372,036,854,775,807. This corresponds to a range of +/- (2^{63}-1)/(86400 * 365.25) or +/- 292,271,023,045 years.

   For fractional seconds, a signed 64-bit integer will handle a resolution of +/- 2^{31}-1, or +/- 9,223,372,036,854,775,807 parts of a second.

45.4 Class API

45.4.1 ESMF_TimeIntervalAssignment(=) - Assign a TimeInterval to another TimeInterval

INTERFACE:

```
interface assignment(=)
timeinterval1 = timeinterval2
```

ARGUMENTS:

```
type(ESMF_TimeInterval) :: timeinterval1
type(ESMF_TimeInterval) :: timeinterval2
```

STATUS:

- This interface is backward compatible with ESMF versions starting at 5.2.0r. If code using this interface compiles with any version of ESMF starting with 5.2.0r, then it will compile with the current version.

DESCRIPTION:

Set `timeinterval1` equal to `timeinterval2`. This is the default Fortran assignment, which creates a complete, independent copy of `timeinterval2` as `timeinterval1`. If `timeinterval2` is an invalid `ESMF_TimeInterval` object then `timeinterval1` will be equally invalid after the assignment.

The arguments are:

timeinterval1 The `ESMF_TimeInterval` to be set.

timeinterval2 The `ESMF_TimeInterval` to be copied.

45.4.2 ESMF_TimeIntervalOperator(+) - Add two TimeIntervals

INTERFACE:

```
interface operator(+)
sum = timeinterval1 + timeinterval2
```

RETURN VALUE:

```
type(ESMF_TimeInterval) :: sum
```

ARGUMENTS:

```
type(ESMF_TimeInterval), intent(in) :: timeinterval1
type(ESMF_TimeInterval), intent(in) :: timeinterval2
```

STATUS:

- This interface is backward compatible with ESMF versions starting at 5.2.0r. If code using this interface compiles with any version of ESMF starting with 5.2.0r, then it will compile with the current version.

DESCRIPTION:

Overloads the (+) operator for the `ESMF_TimeInterval` class to add `timeinterval1` to `timeinterval2` and return the sum as an `ESMF_TimeInterval`.

The arguments are:

timeinterval1 The augend.

timeinterval2 The addend.

45.4.3 ESMF_TimeIntervalOperator(-) - Subtract one TimeInterval from another

INTERFACE:

```
interface operator(-)
difference = timeinterval1 - timeinterval2
```

RETURN VALUE:

```
type(ESMF_TimeInterval) :: difference
```

ARGUMENTS:

```
type(ESMF_TimeInterval), intent(in) :: timeinterval1
type(ESMF_TimeInterval), intent(in) :: timeinterval2
```

STATUS:

- This interface is backward compatible with ESMF versions starting at 5.2.0r. If code using this interface compiles with any version of ESMF starting with 5.2.0r, then it will compile with the current version.

DESCRIPTION:

Overloads the (-) operator for the `ESMF_TimeInterval` class to subtract `timeinterval2` from `timeinterval1` and return the difference as an `ESMF_TimeInterval`.

The arguments are:

timeinterval1 The minuend.

timeinterval2 The subtrahend.

45.4.4 ESMF_TimeIntervalOperator(-) - Perform unary negation on a TimeInterval

INTERFACE:

```
interface operator(-)
timeinterval = -timeinterval
```

RETURN VALUE:

```
type(ESMF_TimeInterval) :: -timeInterval
```

ARGUMENTS:

```
type(ESMF_TimeInterval), intent(in) :: timeinterval
```

STATUS:

- This interface is backward compatible with ESMF versions starting at 5.2.0r. If code using this interface compiles with any version of ESMF starting with 5.2.0r, then it will compile with the current version.

DESCRIPTION:

Overloads the (-) operator for the `ESMF_TimeInterval` class to perform unary negation on `timeinterval` and return the result.

The arguments are:

timeinterval The time interval to be negated.

45.4.5 ESMF_TimeIntervalOperator(/) - Divide two TimeIntervals, return double precision quotient

INTERFACE:

```
interface operator(/)
quotient = timeinterval1 / timeinterval2
```

RETURN VALUE:

```
real(ESMF_KIND_R8) :: quotient
```

ARGUMENTS:

```
type(ESMF_TimeInterval), intent(in) :: timeinterval1
type(ESMF_TimeInterval), intent(in) :: timeinterval2
```

STATUS:

- This interface is backward compatible with ESMF versions starting at 5.2.0r. If code using this interface compiles with any version of ESMF starting with 5.2.0r, then it will compile with the current version.

DESCRIPTION:

Overloads the (/) operator for the `ESMF_TimeInterval` class to return `timeinterval1` divided by `timeinterval2` as a double precision quotient.

The arguments are:

timeinterval1 The dividend.

timeinterval2 The divisor.

45.4.6 ESMF_TimeIntervalOperator(/) - Divide a TimeInterval by an integer, return TimeInterval quotient

INTERFACE:

```
interface operator(/)
quotient = timeinterval / divisor
```

RETURN VALUE:

```
type(ESMF_TimeInterval) :: quotient
```

ARGUMENTS:

```
type(ESMF_TimeInterval), intent(in) :: timeinterval
integer(ESMF_KIND_I4),   intent(in) :: divisor
```

STATUS:

- This interface is backward compatible with ESMF versions starting at 5.2.0r. If code using this interface compiles with any version of ESMF starting with 5.2.0r, then it will compile with the current version.

DESCRIPTION:

Overloads the (/) operator for the `ESMF_TimeInterval` class to divide a `timeinterval` by an integer `divisor`, and return the quotient as an `ESMF_TimeInterval`.

The arguments are:

timeinterval The dividend.

divisor Integer divisor.

45.4.7 ESMF_TimeIntervalFunction(MOD) - Divide two TimeIntervals, return TimeInterval remainder

INTERFACE:

```
interface MOD
function MOD(timeinterval1, timeinterval2)
```

RETURN VALUE:

```
type(ESMF_TimeInterval) :: MOD
```

ARGUMENTS:

```
type(ESMF_TimeInterval), intent(in) :: timeinterval1
type(ESMF_TimeInterval), intent(in) :: timeinterval2
```

STATUS:

- This interface is backward compatible with ESMF versions starting at 5.2.0r. If code using this interface compiles with any version of ESMF starting with 5.2.0r, then it will compile with the current version.

DESCRIPTION:

Overloads the Fortran intrinsic MOD() function for the `ESMF_TimeInterval` class to return the remainder of `timeinterval1` divided by `timeinterval2` as an `ESMF_TimeInterval`.

The arguments are:

timeinterval1 The dividend.

timeinterval2 The divisor.

45.4.8 ESMF_TimeIntervalOperator(*) - Multiply a TimeInterval by an integer

INTERFACE:

```
interface operator(*)
product = timeinterval * multiplier
              OR
product = multiplier * timeinterval
```

RETURN VALUE:

```
type(ESMF_TimeInterval) :: product
```

ARGUMENTS:

```
type(ESMF_TimeInterval), intent(in) :: timeinterval
integer(ESMF_KIND_I4),   intent(in) :: multiplier
```

STATUS:

- This interface is backward compatible with ESMF versions starting at 5.2.0r. If code using this interface compiles with any version of ESMF starting with 5.2.0r, then it will compile with the current version.

DESCRIPTION:

Overloads the (*) operator for the `ESMF_TimeInterval` class to multiply a `timeinterval` by an integer `multiplier`, and return the product as an `ESMF_TimeInterval`.

The arguments are:

timeinterval The multiplicand.

multiplier The integer multiplier.

45.4.9 ESMF_TimeIntervalOperator(==) - Test if TimeInterval 1 is equal to TimeInterval 2

INTERFACE:

```
interface operator(==)
if (timeinterval1 == timeinterval2) then ... endif
            OR
result = (timeinterval1 == timeinterval2)
```

RETURN VALUE:

```
logical :: result
```

ARGUMENTS:

```
type(ESMF_TimeInterval), intent(in) :: timeinterval1
type(ESMF_TimeInterval), intent(in) :: timeinterval2
```

STATUS:

- This interface is backward compatible with ESMF versions starting at 5.2.0r. If code using this interface compiles with any version of ESMF starting with 5.2.0r, then it will compile with the current version.

DESCRIPTION:

Overloads the (==) operator for the `ESMF_TimeInterval` class to return `.true.` if `timeinterval1` and `timeinterval2` represent an equal duration of time, and `.false.` otherwise.

The arguments are:

timeinterval1 First `ESMF_TimeInterval` in comparison.

timeinterval2 Second `ESMF_TimeInterval` in comparison.

45.4.10 ESMF_TimeIntervalOperator(/=) - Test if TimeInterval 1 is not equal to TimeInterval 2

INTERFACE:

```
interface operator(/=)
if (timeinterval1 /= timeinterval2) then ... endif
            OR
result = (timeinterval1 /= timeinterval2)
```

RETURN VALUE:

```
logical :: result
```

ARGUMENTS:

```
type(ESMF_TimeInterval), intent(in) :: timeinterval1
type(ESMF_TimeInterval), intent(in) :: timeinterval2
```

STATUS:

- This interface is backward compatible with ESMF versions starting at 5.2.0r. If code using this interface compiles with any version of ESMF starting with 5.2.0r, then it will compile with the current version.

DESCRIPTION:

Overloads the (/=) operator for the `ESMF_TimeInterval` class to return `.true.` if `timeinterval1` and `timeinterval2` do not represent an equal duration of time, and `.false.` otherwise.

The arguments are:

timeinterval1 First `ESMF_TimeInterval` in comparison.

timeinterval2 Second `ESMF_TimeInterval` in comparison.

45.4.11 ESMF_TimeIntervalOperator(<) - Test if TimeInterval 1 is less than TimeInterval 2

INTERFACE:

```
interface operator(<)
if (timeinterval1 < timeinterval2) then ... endif
             OR
result = (timeinterval1 < timeinterval2)
```

RETURN VALUE:

```
logical :: result
```

ARGUMENTS:

```
type(ESMF_TimeInterval), intent(in) :: timeinterval1
type(ESMF_TimeInterval), intent(in) :: timeinterval2
```

STATUS:

- This interface is backward compatible with ESMF versions starting at 5.2.0r. If code using this interface compiles with any version of ESMF starting with 5.2.0r, then it will compile with the current version.

DESCRIPTION:

Overloads the (<) operator for the `ESMF_TimeInterval` class to return `.true.` if `timeinterval1` is a lesser duration of time than `timeinterval2`, and `.false.` otherwise.

The arguments are:

timeinterval1 First `ESMF_TimeInterval` in comparison.

timeinterval2 Second `ESMF_TimeInterval` in comparison.

45.4.12 ESMF_TimeIntervalOperator(<=) - Test if TimeInterval 1 is less than or equal to TimeInterval 2

INTERFACE:

```
interface operator(<=)
if (timeinterval1 <= timeinterval2) then ... endif
             OR
result = (timeinterval1 <= timeinterval2)
```

RETURN VALUE:

```
logical :: result
```

ARGUMENTS:

```
type(ESMF_TimeInterval), intent(in) :: timeinterval1
type(ESMF_TimeInterval), intent(in) :: timeinterval2
```

STATUS:

- This interface is backward compatible with ESMF versions starting at 5.2.0r. If code using this interface compiles with any version of ESMF starting with 5.2.0r, then it will compile with the current version.

DESCRIPTION:

Overloads the (<=) operator for the `ESMF_TimeInterval` class to return `.true.` if `timeinterval1` is a lesser or equal duration of time than `timeinterval2`, and `.false.` otherwise.

The arguments are:

timeinterval1 First `ESMF_TimeInterval` in comparison.

timeinterval2 Second `ESMF_TimeInterval` in comparison.

45.4.13 ESMF_TimeIntervalOperator(>) - Test if TimeInterval 1 is greater than TimeInterval 2

INTERFACE:

```
interface operator(>)
if (timeinterval1 > timeinterval2) then ... endif
             OR
result = (timeinterval1 > timeinterval2)
```

RETURN VALUE:

```
logical :: result
```

ARGUMENTS:

```
type(ESMF_TimeInterval), intent(in) :: timeinterval1
type(ESMF_TimeInterval), intent(in) :: timeinterval2
```

STATUS:

- This interface is backward compatible with ESMF versions starting at 5.2.0r. If code using this interface compiles with any version of ESMF starting with 5.2.0r, then it will compile with the current version.

DESCRIPTION:

Overloads the (>) operator for the `ESMF_TimeInterval` class to return `.true.` if `timeinterval1` is a greater duration of time than `timeinterval2`, and `.false.` otherwise.

The arguments are:

timeinterval1 First `ESMF_TimeInterval` in comparison.

timeinterval2 Second `ESMF_TimeInterval` in comparison.

45.4.14 ESMF_TimeIntervalOperator(>=) - Test if TimeInterval 1 is greater than or equal to TimeInterval 2

INTERFACE:

```
interface operator(>=)
if (timeinterval1 >= timeinterval2) then ... endif
             OR
result = (timeinterval1 >= timeinterval2)
```

RETURN VALUE:

```
logical :: result
```

ARGUMENTS:

```
type(ESMF_TimeInterval), intent(in) :: timeinterval1
type(ESMF_TimeInterval), intent(in) :: timeinterval2
```

STATUS:

- This interface is backward compatible with ESMF versions starting at 5.2.0r. If code using this interface compiles with any version of ESMF starting with 5.2.0r, then it will compile with the current version.

DESCRIPTION:

Overloads the (>=) operator for the `ESMF_TimeInterval` class to return `.true.` if `timeinterval1` is a greater or equal duration of time than `timeinterval2`, and `.false.` otherwise.

The arguments are:

timeinterval1 First `ESMF_TimeInterval` in comparison.

timeinterval2 Second `ESMF_TimeInterval` in comparison.

45.4.15 ESMF_TimeIntervalAbsValue - Get the absolute value of a TimeInterval

INTERFACE:

```
function ESMF_TimeIntervalAbsValue(timeinterval)
```

RETURN VALUE:

```
type(ESMF_TimeInterval) :: ESMF_TimeIntervalAbsValue
```

ARGUMENTS:

```
type(ESMF_TimeInterval), intent(in) :: timeinterval
```

STATUS:

- This interface is backward compatible with ESMF versions starting at 5.2.0r. If code using this interface compiles with any version of ESMF starting with 5.2.0r, then it will compile with the current version.

DESCRIPTION:

Returns the absolute value of `timeinterval`.

The argument is:

timeinterval The object instance to take the absolute value of. Absolute value is returned as the value of the function.

45.4.16 ESMF_TimeIntervalGet - Get a TimeInterval value

INTERFACE:

```
! Private name; call using ESMF_TimeIntervalGet()
subroutine ESMF_TimeIntervalGetDur(timeinterval, &
  yy, yy_i8, &
  mm, mm_i8, &
  d, d_i8, &
  h, m, &
  s, s_i8, &
  ms, us, ns, &
  d_r8, h_r8, m_r8, s_r8, &
  ms_r8, us_r8, ns_r8, &
  sN, sN_i8, sD, sD_i8, &
  startTime, calendar, calkindflag, &
  timeString, timeStringISOFrac, rc)
```

ARGUMENTS:

```
      type(ESMF_TimeInterval), intent(in)            :: timeinterval
 -- The following arguments require argument keyword syntax (e.g. rc=rc). --
      integer(ESMF_KIND_I4),   intent(out), optional :: yy
      integer(ESMF_KIND_I8),   intent(out), optional :: yy_i8
      integer(ESMF_KIND_I4),   intent(out), optional :: mm
      integer(ESMF_KIND_I8),   intent(out), optional :: mm_i8
      integer(ESMF_KIND_I4),   intent(out), optional :: d
      integer(ESMF_KIND_I8),   intent(out), optional :: d_i8
      integer(ESMF_KIND_I4),   intent(out), optional :: h
      integer(ESMF_KIND_I4),   intent(out), optional :: m
      integer(ESMF_KIND_I4),   intent(out), optional :: s
      integer(ESMF_KIND_I8),   intent(out), optional :: s_i8
      integer(ESMF_KIND_I4),   intent(out), optional :: ms
      integer(ESMF_KIND_I4),   intent(out), optional :: us
      integer(ESMF_KIND_I4),   intent(out), optional :: ns
      real(ESMF_KIND_R8),      intent(out), optional :: d_r8
      real(ESMF_KIND_R8),      intent(out), optional :: h_r8
      real(ESMF_KIND_R8),      intent(out), optional :: m_r8
      real(ESMF_KIND_R8),      intent(out), optional :: s_r8
      real(ESMF_KIND_R8),      intent(out), optional :: ms_r8
      real(ESMF_KIND_R8),      intent(out), optional :: us_r8
      real(ESMF_KIND_R8),      intent(out), optional :: ns_r8
      integer(ESMF_KIND_I4),   intent(out), optional :: sN
      integer(ESMF_KIND_I8),   intent(out), optional :: sN_i8
      integer(ESMF_KIND_I4),   intent(out), optional :: sD
      integer(ESMF_KIND_I8),   intent(out), optional :: sD_i8
      type(ESMF_Time),         intent(out), optional :: startTime
      type(ESMF_Calendar),     intent(out), optional :: calendar
      type(ESMF_CalKind_Flag), intent(out), optional :: calkindflag
      character (len=*),       intent(out), optional :: timeString
      character (len=*),       intent(out), optional :: timeStringISOFrac
      integer,                 intent(out), optional :: rc
```

STATUS:

- This interface is backward compatible with ESMF versions starting at 5.2.0r. If code using this interface compiles with any version of ESMF starting with 5.2.0r, then it will compile with the current version.

DESCRIPTION:

Gets the value of `timeinterval` in units specified by the user via Fortran optional arguments.

The ESMF Time Manager represents and manipulates time internally with integers to maintain precision. Hence, user-specified floating point values are converted internally from integers.

Units are bound (normalized) to the next larger unit specified. For example, if a time interval is defined to be one day, then `ESMF_TimeIntervalGet(d = days, s = seconds)` would return `days = 1`, `seconds = 0`, whereas `ESMF_TimeIntervalGet(s = seconds)` would return `seconds = 86400`. However, double precision time units are not considered in this normalization: Double precision time units are still bound by units of a day or larger, but double precision time units of an hour or smaller neither bind nor are bound by other time units of an hour or smaller (either integer or double precision).

For timeString, converts `ESMF_TimeInterval`'s value into partial ISO 8601 format PyYmMdDThHmMs[:n/d]S. See [24] and [14]. See also method `ESMF_TimeIntervalPrint()`.

For timeStringISOFrac, converts `ESMF_TimeInterval`'s value into full ISO 8601 format PyYmMdDThHmMs[.f]S. See [24] and [14]. See also method `ESMF_TimeIntervalPrint()`.

The arguments are:

timeinterval The object instance to query.

[yy] Integer year (32-bit).

[yy_i8] Integer year (large, 64-bit).

[mm] Integer month (32-bit).

[mm_i8] Integer month (large, 64-bit).

[d] Integer Julian day, or Modified Julian day (32-bit).

[d_i8] Integer Julian day, or Modified Julian day (large, 64-bit).

[h] Integer hour.

[m] Integer minute.

[s] Integer second (32-bit).

[s_i8] Integer second (large, 64-bit).

[ms] Integer millisecond.

[us] Integer microsecond.

[ns] Integer nanosecond.

[d_r8] Double precision day.

[h_r8] Double precision hour.

[m_r8] Double precision minute.

[s_r8] Double precision second.

[ms_r8] Double precision millisecond.

[us_r8] Double precision microsecond.

[ns_r8] Double precision nanosecond.

[sN] Integer numerator of fractional second (sN/sD).

[sN_i8] Integer numerator of fractional second (sN_i8/sD_i8) (large, 64-bit).

[sD] Integer denominator of fractional second (sN/sD).

[sD_i8] Integer denominator of fractional second (sN_i8/sD_i8) (large, 64-bit).

[startTime] Starting time, if set, of an absolute calendar interval (yy, mm, and/or d).

[calendar] Associated `Calendar`, if any.

[calkindflag] Associated `CalKind_Flag`, if any.

[timeString] Convert time interval value to format string PyYmMdDThHmMs[:n/d]S, where n/d is numerator/denominator of any fractional seconds and all other units are in ISO 8601 format. See [24] and [14]. See also method `ESMF_TimeIntervalPrint()`.

[timeStringISOFrac] Convert time interval value to strict ISO 8601 format string PyYmMdDThHmMs[.f], where f is decimal form of any fractional seconds. See [24] and [14]. See also method `ESMF_TimeIntervalPrint()`.

[rc] Return code; equals `ESMF_SUCCESS` if there are no errors.

45.4.17 ESMF_TimeIntervalGet - Get a TimeInterval value

INTERFACE:

```
! Private name; call using ESMF_TimeIntervalGet()
subroutine ESMF_TimeIntervalGetDurStart(timeinterval, startTimeIn, &
  &
  yy, yy_i8, &
  mm, mm_i8, &
  d, d_i8, &
  h, m, &
  s, s_i8, &
  ms, us, ns, &
  d_r8, h_r8, m_r8, s_r8, &
  ms_r8, us_r8, ns_r8, &
  sN, sN_i8, sD, sD_i8, &
  startTime, &
  calendar, calkindflag, &
  timeString, timeStringISOFrac, rc)
```

ARGUMENTS:

```
      type(ESMF_TimeInterval), intent(in)            :: timeinterval
      type(ESMF_Time),         intent(in)            :: startTimeIn ! Input
 -- The following arguments require argument keyword syntax (e.g. rc=rc). --
      integer(ESMF_KIND_I4),   intent(out), optional :: yy
      integer(ESMF_KIND_I8),   intent(out), optional :: yy_i8
      integer(ESMF_KIND_I4),   intent(out), optional :: mm
```

```
integer(ESMF_KIND_I8),   intent(out), optional :: mm_i8
integer(ESMF_KIND_I4),   intent(out), optional :: d
integer(ESMF_KIND_I8),   intent(out), optional :: d_i8
integer(ESMF_KIND_I4),   intent(out), optional :: h
integer(ESMF_KIND_I4),   intent(out), optional :: m
integer(ESMF_KIND_I4),   intent(out), optional :: s
integer(ESMF_KIND_I8),   intent(out), optional :: s_i8
integer(ESMF_KIND_I4),   intent(out), optional :: ms
integer(ESMF_KIND_I4),   intent(out), optional :: us
integer(ESMF_KIND_I4),   intent(out), optional :: ns
real(ESMF_KIND_R8),      intent(out), optional :: d_r8
real(ESMF_KIND_R8),      intent(out), optional :: h_r8
real(ESMF_KIND_R8),      intent(out), optional :: m_r8
real(ESMF_KIND_R8),      intent(out), optional :: s_r8
real(ESMF_KIND_R8),      intent(out), optional :: ms_r8
real(ESMF_KIND_R8),      intent(out), optional :: us_r8
real(ESMF_KIND_R8),      intent(out), optional :: ns_r8
integer(ESMF_KIND_I4),   intent(out), optional :: sN
integer(ESMF_KIND_I8),   intent(out), optional :: sN_i8
integer(ESMF_KIND_I4),   intent(out), optional :: sD
integer(ESMF_KIND_I8),   intent(out), optional :: sD_i8
type(ESMF_Time),         intent(out), optional :: startTime
type(ESMF_Calendar),     intent(out), optional :: calendar
type(ESMF_CalKind_Flag), intent(out), optional :: calkindflag
character (len=*),       intent(out), optional :: timeString
character (len=*),       intent(out), optional :: timeStringISOFrac
integer,                 intent(out), optional :: rc
```

STATUS:

- This interface is backward compatible with ESMF versions starting at 5.2.0r. If code using this interface compiles with any version of ESMF starting with 5.2.0r, then it will compile with the current version.

DESCRIPTION:

Gets the value of `timeinterval` in units specified by the user via Fortran optional arguments.

The ESMF Time Manager represents and manipulates time internally with integers to maintain precision. Hence, user-specified floating point values are converted internally from integers.

Units are bound (normalized) to the next larger unit specified. For example, if a time interval is defined to be one day, then `ESMF_TimeIntervalGet(d = days, s = seconds)` would return `days = 1`, `seconds = 0`, whereas `ESMF_TimeIntervalGet(s = seconds)` would return `seconds = 86400`. However, double precision time units are not considered in this normalization: Double precision time units are still bound by units of a day or larger, but double precision time units of an hour or smaller neither bind nor are bound by other time units of an hour or smaller (either integer or double precision).

For timeString, converts `ESMF_TimeInterval`'s value into partial ISO 8601 format PyYmMdDThHmMs[:n/d]S. See [24] and [14]. See also method `ESMF_TimeIntervalPrint()`.

For timeStringISOFrac, converts `ESMF_TimeInterval`'s value into full ISO 8601 format PyYmMdDThHmMs[.f]S. See [24] and [14]. See also method `ESMF_TimeIntervalPrint()`.

The arguments are:

timeinterval The object instance to query.

startTimeIn INPUT argument: pins a calendar interval to a specific point in time to allow conversion between relative units (yy, mm, d) and absolute units (d, h, m, s). Overrides any startTime and/or endTime previously set. Mutually exclusive with endTimeIn and calendarIn.

[yy] Integer year (32-bit).

[yy_i8] Integer year (large, 64-bit).

[mm] Integer month (32-bit).

[mm_i8] Integer month (large, 64-bit).

[d] Integer Julian day, or Modified Julian day (32-bit).

[d_i8] Integer Julian day, or Modified Julian day (large, 64-bit).

[h] Integer hour.

[m] Integer minute.

[s] Integer second (32-bit).

[s_i8] Integer second (large, 64-bit).

[ms] Integer millisecond.

[us] Integer microsecond.

[ns] Integer nanosecond.

[d_r8] Double precision day.

[h_r8] Double precision hour.

[m_r8] Double precision minute.

[s_r8] Double precision second.

[ms_r8] Double precision millisecond.

[us_r8] Double precision microsecond.

[ns_r8] Double precision nanosecond.

[sN] Integer numerator of fractional second (sN/sD).

[sN_i8] Integer numerator of fractional second (sN_i8/sD_i8) (large, 64-bit).

[sD] Integer denominator of fractional second (sN/sD).

[sD_i8] Integer denominator of fractional second (sN_i8/sD_i8) (large, 64-bit).

[startTime] Starting time, if set, of an absolute calendar interval (yy, mm, and/or d).

[calendar] Associated `Calendar`, if any.

[calkindflag] Associated `CalKind_Flag`, if any.

[timeString] Convert time interval value to format string PyYmMdDThHmMs[:n/d]S, where n/d is numerator/denominator of any fractional seconds and all other units are in ISO 8601 format. See [24] and [14]. See also method `ESMF_TimeIntervalPrint()`.

[timeStringISOFrac] Convert time interval value to strict ISO 8601 format string PyYmMdDThHmMs[.f], where f is decimal form of any fractional seconds. See [24] and [14]. See also method `ESMF_TimeIntervalPrint()`.

[rc] Return code; equals `ESMF_SUCCESS` if there are no errors.

45.4.18 ESMF_TimeIntervalGet - Get a TimeInterval value

INTERFACE:

```
! Private name; call using ESMF_TimeIntervalGet()
subroutine ESMF_TimeIntervalGetDurCal(timeinterval, calendarIn, &
  &
  yy, yy_i8, &
  mm, mm_i8, &
  d, d_i8, &
  h, m, &
  s, s_i8, &
  ms, us, ns, &
  d_r8, h_r8, m_r8, s_r8, &
  ms_r8, us_r8, ns_r8, &
  sN, sN_i8, sD, sD_i8, &
  startTime, &
  calendar, calkindflag, &
  timeString, timeStringISOFrac, rc)
```

ARGUMENTS:

```
      type(ESMF_TimeInterval), intent(in)            :: timeinterval
      type(ESMF_Calendar),     intent(in)            :: calendarIn ! Input
 -- The following arguments require argument keyword syntax (e.g. rc=rc). --
      integer(ESMF_KIND_I4),   intent(out), optional :: yy
      integer(ESMF_KIND_I8),   intent(out), optional :: yy_i8
      integer(ESMF_KIND_I4),   intent(out), optional :: mm
      integer(ESMF_KIND_I8),   intent(out), optional :: mm_i8
      integer(ESMF_KIND_I4),   intent(out), optional :: d
      integer(ESMF_KIND_I8),   intent(out), optional :: d_i8
      integer(ESMF_KIND_I4),   intent(out), optional :: h
      integer(ESMF_KIND_I4),   intent(out), optional :: m
      integer(ESMF_KIND_I4),   intent(out), optional :: s
      integer(ESMF_KIND_I8),   intent(out), optional :: s_i8
      integer(ESMF_KIND_I4),   intent(out), optional :: ms
      integer(ESMF_KIND_I4),   intent(out), optional :: us
      integer(ESMF_KIND_I4),   intent(out), optional :: ns
      real(ESMF_KIND_R8),      intent(out), optional :: d_r8
      real(ESMF_KIND_R8),      intent(out), optional :: h_r8
      real(ESMF_KIND_R8),      intent(out), optional :: m_r8
      real(ESMF_KIND_R8),      intent(out), optional :: s_r8
      real(ESMF_KIND_R8),      intent(out), optional :: ms_r8
      real(ESMF_KIND_R8),      intent(out), optional :: us_r8
      real(ESMF_KIND_R8),      intent(out), optional :: ns_r8
      integer(ESMF_KIND_I4),   intent(out), optional :: sN
      integer(ESMF_KIND_I8),   intent(out), optional :: sN_i8
      integer(ESMF_KIND_I4),   intent(out), optional :: sD
      integer(ESMF_KIND_I8),   intent(out), optional :: sD_i8
      type(ESMF_Time),         intent(out), optional :: startTime
      type(ESMF_Calendar),     intent(out), optional :: calendar
      type(ESMF_CalKind_Flag), intent(out), optional :: calkindflag
      character (len=*),       intent(out), optional :: timeString
```

```
character (len=*),       intent(out), optional :: timeStringISOFrac
integer,                 intent(out), optional :: rc
```

STATUS:

- This interface is backward compatible with ESMF versions starting at 5.2.0r. If code using this interface compiles with any version of ESMF starting with 5.2.0r, then it will compile with the current version.

DESCRIPTION:

Gets the value of `timeinterval` in units specified by the user via Fortran optional arguments.

The ESMF Time Manager represents and manipulates time internally with integers to maintain precision. Hence, user-specified floating point values are converted internally from integers.

Units are bound (normalized) to the next larger unit specified. For example, if a time interval is defined to be one day, then `ESMF_TimeIntervalGet(d = days, s = seconds)` would return `days = 1`, `seconds = 0`, whereas `ESMF_TimeIntervalGet(s = seconds)` would return `seconds = 86400`. However, double precision time units are not considered in this normalization: Double precision time units are still bound by units of a day or larger, but double precision time units of an hour or smaller neither bind nor are bound by other time units of an hour or smaller (either integer or double precision).

For timeString, converts `ESMF_TimeInterval`'s value into partial ISO 8601 format PyYmMdDThHmMs[:n/d]S. See [24] and [14]. See also method `ESMF_TimeIntervalPrint()`.

For timeStringISOFrac, converts `ESMF_TimeInterval`'s value into full ISO 8601 format PyYmMdDThHmMs[.f]S. See [24] and [14]. See also method `ESMF_TimeIntervalPrint()`.

The arguments are:

timeinterval The object instance to query.

calendarIn INPUT argument: pins a calendar interval to a specific calendar to allow conversion between relative units (yy, mm, d) and absolute units (d, h, m, s). Mutually exclusive with startTimeIn and endTimeIn since they contain a calendar. Alternate to, and mutually exclusive with, calkindflagIn below. Primarily for specifying a custom calendar kind.

[yy] Integer year (32-bit).

[yy_i8] Integer year (large, 64-bit).

[mm] Integer month (32-bit).

[mm_i8] Integer month (large, 64-bit).

[d] Integer Julian day, or Modified Julian day (32-bit).

[d_i8] Integer Julian day, or Modified Julian day (large, 64-bit).

[h] Integer hour.

[m] Integer minute.

[s] Integer second (32-bit).

[s_i8] Integer second (large, 64-bit).

[ms] Integer millisecond.

[us] Integer microsecond.

[ns] Integer nanosecond.

[d_r8] Double precision day.

[h_r8] Double precision hour.

[m_r8] Double precision minute.

[s_r8] Double precision second.

[ms_r8] Double precision millisecond.

[us_r8] Double precision microsecond.

[ns_r8] Double precision nanosecond.

[sN] Integer numerator of fractional second (sN/sD).

[sN_i8] Integer numerator of fractional second (sN_i8/sD_i8) (large, 64-bit).

[sD] Integer denominator of fractional second (sN/sD).

[sD_i8] Integer denominator of fractional second (sN_i8/sD_i8) (large, 64-bit).

[startTime] Starting time, if set, of an absolute calendar interval (yy, mm, and/or d).

[calendar] Associated `Calendar`, if any.

[calkindflag] Associated `CalKind_Flag`, if any.

[timeString] Convert time interval value to format string PyYmMdDThHmMs[:n/d]S, where n/d is numerator/denominator of any fractional seconds and all other units are in ISO 8601 format. See [24] and [14]. See also method `ESMF_TimeIntervalPrint()`.

[timeStringISOFrac] Convert time interval value to strict ISO 8601 format string PyYmMdDThHmMs[.f], where f is decimal form of any fractional seconds. See [24] and [14]. See also method `ESMF_TimeIntervalPrint()`.

[rc] Return code; equals `ESMF_SUCCESS` if there are no errors.

45.4.19 ESMF_TimeIntervalGet - Get a TimeInterval value

INTERFACE:

```
! Private name; call using ESMF_TimeIntervalGet()
subroutine ESMF_TimeIntervalGetDurCalTyp(timeinterval, calkindflagIn, &
  &
  yy, yy_i8, &
  mm, mm_i8, &
  d, d_i8, &
  h, m, &
  s, s_i8, &
  ms, us, ns, &
  d_r8, h_r8, m_r8, s_r8, &
```

```
          ms_r8, us_r8, ns_r8, &
          sN, sN_i8, sD, sD_i8, &
          startTime, &
          calendar, calkindflag, &
          timeString, &
          timeStringISOFrac, rc)
```

ARGUMENTS:

```
       type(ESMF_TimeInterval), intent(in)            :: timeinterval
       type(ESMF_CalKind_Flag), intent(in)            :: calkindflagIn ! Input
 -- The following arguments require argument keyword syntax (e.g. rc=rc). --
       integer(ESMF_KIND_I4),   intent(out), optional :: yy
       integer(ESMF_KIND_I8),   intent(out), optional :: yy_i8
       integer(ESMF_KIND_I4),   intent(out), optional :: mm
       integer(ESMF_KIND_I8),   intent(out), optional :: mm_i8
       integer(ESMF_KIND_I4),   intent(out), optional :: d
       integer(ESMF_KIND_I8),   intent(out), optional :: d_i8
       integer(ESMF_KIND_I4),   intent(out), optional :: h
       integer(ESMF_KIND_I4),   intent(out), optional :: m
       integer(ESMF_KIND_I4),   intent(out), optional :: s
       integer(ESMF_KIND_I8),   intent(out), optional :: s_i8
       integer(ESMF_KIND_I4),   intent(out), optional :: ms
       integer(ESMF_KIND_I4),   intent(out), optional :: us
       integer(ESMF_KIND_I4),   intent(out), optional :: ns
       real(ESMF_KIND_R8),      intent(out), optional :: d_r8
       real(ESMF_KIND_R8),      intent(out), optional :: h_r8
       real(ESMF_KIND_R8),      intent(out), optional :: m_r8
       real(ESMF_KIND_R8),      intent(out), optional :: s_r8
       real(ESMF_KIND_R8),      intent(out), optional :: ms_r8
       real(ESMF_KIND_R8),      intent(out), optional :: us_r8
       real(ESMF_KIND_R8),      intent(out), optional :: ns_r8
       integer(ESMF_KIND_I4),   intent(out), optional :: sN
       integer(ESMF_KIND_I8),   intent(out), optional :: sN_i8
       integer(ESMF_KIND_I4),   intent(out), optional :: sD
       integer(ESMF_KIND_I8),   intent(out), optional :: sD_i8
       type(ESMF_Time),         intent(out), optional :: startTime
       type(ESMF_Calendar),     intent(out), optional :: calendar
       type(ESMF_CalKind_Flag), intent(out), optional :: calkindflag
       character (len=*),       intent(out), optional :: timeString
       character (len=*),       intent(out), optional :: timeStringISOFrac
       integer,                 intent(out), optional :: rc
```

STATUS:

- This interface is backward compatible with ESMF versions starting at 5.2.0r. If code using this interface compiles with any version of ESMF starting with 5.2.0r, then it will compile with the current version.

DESCRIPTION:

Gets the value of `timeinterval` in units specified by the user via Fortran optional arguments.

The ESMF Time Manager represents and manipulates time internally with integers to maintain precision. Hence, user-specified floating point values are converted internally from integers.

Units are bound (normalized) to the next larger unit specified. For example, if a time interval is defined to be one day, then `ESMF_TimeIntervalGet(d = days, s = seconds)` would return `days = 1`, `seconds = 0`, whereas `ESMF_TimeIntervalGet(s = seconds)` would return `seconds = 86400`. However, double precision time units are not considered in this normalization: Double precision time units are still bound by units of a day or larger, but double precision time units of an hour or smaller neither bind nor are bound by other time units of an hour or smaller (either integer or double precision).

For timeString, converts `ESMF_TimeInterval`'s value into partial ISO 8601 format PyYmMdDThHmMs[:n/d]S. See [24] and [14]. See also method `ESMF_TimeIntervalPrint()`.

For timeStringISOFrac, converts `ESMF_TimeInterval`'s value into full ISO 8601 format PyYmMdDThHmMs[.f]S. See [24] and [14]. See also method `ESMF_TimeIntervalPrint()`.

The arguments are:

timeinterval The object instance to query.

calkindflagIn INPUT argument: Alternate to, and mutually exclusive with, calendarIn above. More convenient way of specifying a built-in calendar kind.

[yy] Integer year (32-bit).

[yy_i8] Integer year (large, 64-bit).

[mm] Integer month (32-bit).

[mm_i8] Integer month (large, 64-bit).

[d] Integer Julian day, or Modified Julian day (32-bit).

[d_i8] Integer Julian day, or Modified Julian day (large, 64-bit).

[h] Integer hour.

[m] Integer minute.

[s] Integer second (32-bit).

[s_i8] Integer second (large, 64-bit).

[ms] Integer millisecond.

[us] Integer microsecond.

[ns] Integer nanosecond.

[d_r8] Double precision day.

[h_r8] Double precision hour.

[m_r8] Double precision minute.

[s_r8] Double precision second.

[ms_r8] Double precision millisecond.

[us_r8] Double precision microsecond.

[ns_r8] Double precision nanosecond.

[sN] Integer numerator of fractional second (sN/sD).

[sN_i8] Integer numerator of fractional second (sN_i8/sD_i8) (large, 64-bit).

[sD] Integer denominator of fractional second (sN/sD).

[sD_i8] Integer denominator of fractional second (sN_i8/sD_i8) (large, 64-bit).

[startTime] Starting time, if set, of an absolute calendar interval (yy, mm, and/or d).

[calendar] Associated `Calendar`, if any.

[calkindflag] Associated `CalKind_Flag`, if any.

[timeString] Convert time interval value to format string PyYmMdDThHmMs[:n/d]S, where n/d is numerator/denominator of any fractional seconds and all other units are in ISO 8601 format. See [24] and [14]. See also method `ESMF_TimeIntervalPrint()`.

[timeStringISOFrac] Convert time interval value to strict ISO 8601 format string PyYmMdDThHmMs[.f], where f is decimal form of any fractional seconds. See [24] and [14]. See also method `ESMF_TimeIntervalPrint()`.

[rc] Return code; equals `ESMF_SUCCESS` if there are no errors.

45.4.20 ESMF_TimeIntervalNegAbsValue - Return the negative absolute value of a TimeInterval

INTERFACE:

```
function ESMF_TimeIntervalNegAbsValue(timeinterval)
```

RETURN VALUE:

```
type(ESMF_TimeInterval) :: ESMF_TimeIntervalNegAbsValue
```

ARGUMENTS:

```
type(ESMF_TimeInterval), intent(in) :: timeinterval
```

STATUS:

- This interface is backward compatible with ESMF versions starting at 5.2.0r. If code using this interface compiles with any version of ESMF starting with 5.2.0r, then it will compile with the current version.

DESCRIPTION:

Returns the negative absolute value of `timeinterval`.

The argument is:

timeinterval The object instance to take the negative absolute value of. Negative absolute value is returned as the value of the function.

45.4.21 ESMF_TimeIntervalPrint - Print TimeInterval information

INTERFACE:

```
subroutine ESMF_TimeIntervalPrint(timeinterval, options, rc)
```

ARGUMENTS:

```
type(ESMF_TimeInterval), intent(in)            :: timeinterval
character (len=*),       intent(in),  optional :: options
integer,                 intent(out), optional :: rc
```

DESCRIPTION:

Prints out the contents of an `ESMF_TimeInterval` to `stdout`, in support of testing and debugging. The options control the type of information and level of detail.

The arguments are:

timeinterval Time interval to be printed out.

[options] Print options. If none specified, prints all `timeinterval` property values.
"string" - prints `timeinterval`'s value in ISO 8601 format for all units through seconds. For any non-zero fractional seconds, prints in integer rational fraction form n/d. Format is PyYmMdDThHmMs[:n/d]S, where [:n/d] is the integer numerator and denominator of the fractional seconds value, if present. See [24] and [14]. See also method `ESMF_TimeIntervalGet(..., timeString= , ...)`
"string isofrac" - prints `timeinterval`'s value in strict ISO 8601 format for all units, including any fractional seconds part. Format is PyYmMdDThHmMs[.f]S, where [.f] represents fractional seconds in decimal form, if present. See [24] and [14]. See also method `ESMF_TimeIntervalGet(..., timeStringISOFrac= , ...)`

[rc] Return code; equals `ESMF_SUCCESS` if there are no errors.

45.4.22 ESMF_TimeIntervalSet - Initialize or set a TimeInterval

INTERFACE:

```
! Private name; call using ESMF_TimeIntervalSet()
subroutine ESMF_TimeIntervalSetDur(timeinterval, &
  yy, yy_i8, &
  mm, mm_i8, &
  d, d_i8, &
  h, m, &
  s, s_i8, &
```

```
        ms, us, ns, &
        d_r8, h_r8, m_r8, s_r8, &
        ms_r8, us_r8, ns_r8, &
        sN, sN_i8, sD, sD_i8, rc)
```

ARGUMENTS:

```
      type(ESMF_TimeInterval), intent(inout)         :: timeinterval
 -- The following arguments require argument keyword syntax (e.g. rc=rc). --
      integer(ESMF_KIND_I4),   intent(in),  optional :: yy
      integer(ESMF_KIND_I8),   intent(in),  optional :: yy_i8
      integer(ESMF_KIND_I4),   intent(in),  optional :: mm
      integer(ESMF_KIND_I8),   intent(in),  optional :: mm_i8
      integer(ESMF_KIND_I4),   intent(in),  optional :: d
      integer(ESMF_KIND_I8),   intent(in),  optional :: d_i8
      integer(ESMF_KIND_I4),   intent(in),  optional :: h
      integer(ESMF_KIND_I4),   intent(in),  optional :: m
      integer(ESMF_KIND_I4),   intent(in),  optional :: s
      integer(ESMF_KIND_I8),   intent(in),  optional :: s_i8
      integer(ESMF_KIND_I4),   intent(in),  optional :: ms
      integer(ESMF_KIND_I4),   intent(in),  optional :: us
      integer(ESMF_KIND_I4),   intent(in),  optional :: ns
      real(ESMF_KIND_R8),      intent(in),  optional :: d_r8
      real(ESMF_KIND_R8),      intent(in),  optional :: h_r8
      real(ESMF_KIND_R8),      intent(in),  optional :: m_r8
      real(ESMF_KIND_R8),      intent(in),  optional :: s_r8
      real(ESMF_KIND_R8),      intent(in),  optional :: ms_r8
      real(ESMF_KIND_R8),      intent(in),  optional :: us_r8
      real(ESMF_KIND_R8),      intent(in),  optional :: ns_r8
      integer(ESMF_KIND_I4),   intent(in),  optional :: sN
      integer(ESMF_KIND_I8),   intent(in),  optional :: sN_i8
      integer(ESMF_KIND_I4),   intent(in),  optional :: sD
      integer(ESMF_KIND_I8),   intent(in),  optional :: sD_i8
      integer,                 intent(out), optional :: rc
```

STATUS:

- This interface is backward compatible with ESMF versions starting at 5.2.0r. If code using this interface compiles with any version of ESMF starting with 5.2.0r, then it will compile with the current version.

DESCRIPTION:

Sets the value of the `ESMF_TimeInterval` in units specified by the user via Fortran optional arguments.

The ESMF Time Manager represents and manipulates time internally with integers to maintain precision. Hence, user-specified floating point values are converted internally to integers.

Ranges are limited only by machine word size. Numeric defaults are 0, except for sD, which is 1.

The arguments are:

timeinterval The object instance to initialize.

[yy] Integer year (32-bit). Default = 0.

[yy_i8] Integer year (large, 64-bit). Default = 0.

[mm] Integer month (32-bit). Default = 0.

[mm_i8] Integer month (large, 64-bit). Default = 0.

[d] Integer Julian day, or Modified Julian day (32-bit). Default = 0.

[d_i8] Integer Julian day, or Modified Julian day (large, 64-bit). Default = 0.

[h] Integer hour. Default = 0.

[m] Integer minute. Default = 0.

[s] Integer second (32-bit). Default = 0.

[s_i8] Integer second (large, 64-bit). Default = 0.

[ms] Integer millisecond. Default = 0.

[us] Integer microsecond. Default = 0.

[ns] Integer nanosecond. Default = 0.

[d_r8] Double precision day. Default = 0.0.

[h_r8] Double precision hour. Default = 0.0.

[m_r8] Double precision minute. Default = 0.0.

[s_r8] Double precision second. Default = 0.0.

[ms_r8] Double precision millisecond. Default = 0.0.

[us_r8] Double precision microsecond. Default = 0.0.

[ns_r8] Double precision nanosecond. Default = 0.0.

[sN] Integer numerator of fractional second (sN/sD). Default = 0.

[sN_i8] Integer numerator of fractional second (sN_i8/sD_i8) (large, 64-bit). Default = 0.

[sD] Integer denominator of fractional second (sN/sD). Default = 1.

[sD_i8] Integer denominator of fractional second (sN_i8/sD_i8) (large, 64-bit). Default = 1.

[rc] Return code; equals `ESMF_SUCCESS` if there are no errors.

45.4.23 ESMF_TimeIntervalSet - Initialize or set a TimeInterval

INTERFACE:

```
! Private name; call using ESMF_TimeIntervalSet()
subroutine ESMF_TimeIntervalSetDurStart(timeinterval, startTime, &
  &
  yy, yy_i8, &
  mm, mm_i8, &
  d, d_i8, &
  h, m, &
  s, s_i8, &
  ms, us, ns, &
  d_r8, h_r8, m_r8, s_r8, &
  ms_r8, us_r8, ns_r8, &
  sN, sN_i8, sD, sD_i8, &
  rc)
```

ARGUMENTS:

```
      type(ESMF_TimeInterval), intent(inout)         :: timeinterval
      type(ESMF_Time),         intent(in)            :: startTime
 -- The following arguments require argument keyword syntax (e.g. rc=rc). --
      integer(ESMF_KIND_I4),   intent(in),  optional :: yy
      integer(ESMF_KIND_I8),   intent(in),  optional :: yy_i8
      integer(ESMF_KIND_I4),   intent(in),  optional :: mm
      integer(ESMF_KIND_I8),   intent(in),  optional :: mm_i8
      integer(ESMF_KIND_I4),   intent(in),  optional :: d
      integer(ESMF_KIND_I8),   intent(in),  optional :: d_i8
      integer(ESMF_KIND_I4),   intent(in),  optional :: h
      integer(ESMF_KIND_I4),   intent(in),  optional :: m
      integer(ESMF_KIND_I4),   intent(in),  optional :: s
      integer(ESMF_KIND_I8),   intent(in),  optional :: s_i8
      integer(ESMF_KIND_I4),   intent(in),  optional :: ms
      integer(ESMF_KIND_I4),   intent(in),  optional :: us
      integer(ESMF_KIND_I4),   intent(in),  optional :: ns
      real(ESMF_KIND_R8),      intent(in),  optional :: d_r8
      real(ESMF_KIND_R8),      intent(in),  optional :: h_r8
      real(ESMF_KIND_R8),      intent(in),  optional :: m_r8
      real(ESMF_KIND_R8),      intent(in),  optional :: s_r8
      real(ESMF_KIND_R8),      intent(in),  optional :: ms_r8
      real(ESMF_KIND_R8),      intent(in),  optional :: us_r8
      real(ESMF_KIND_R8),      intent(in),  optional :: ns_r8
      integer(ESMF_KIND_I4),   intent(in),  optional :: sN
      integer(ESMF_KIND_I8),   intent(in),  optional :: sN_i8
      integer(ESMF_KIND_I4),   intent(in),  optional :: sD
      integer(ESMF_KIND_I8),   intent(in),  optional :: sD_i8
      integer,                 intent(out), optional :: rc
```

STATUS:

- This interface is backward compatible with ESMF versions starting at 5.2.0r. If code using this interface compiles with any version of ESMF starting with 5.2.0r, then it will compile with the current version.

DESCRIPTION:

Sets the value of the `ESMF_TimeInterval` in units specified by the user via Fortran optional arguments.

The ESMF Time Manager represents and manipulates time internally with integers to maintain precision. Hence, user-specified floating point values are converted internally to integers.

Ranges are limited only by machine word size. Numeric defaults are 0, except for sD, which is 1.

The arguments are:

timeinterval The object instance to initialize.

startTime Starting time of an absolute calendar interval (yy, mm, and/or d); pins a calendar interval to a specific point in time. If not set, and calendar also not set, calendar interval "floats" across all calendars and times.

[yy] Integer year (32-bit). Default = 0.

[yy_i8] Integer year (large, 64-bit). Default = 0.

[mm] Integer month (32-bit). Default = 0.

[mm_i8] Integer month (large, 64-bit). Default = 0.

[d] Integer Julian day, or Modified Julian day (32-bit). Default = 0.

[d_i8] Integer Julian day, or Modified Julian day (large, 64-bit). Default = 0.

[h] Integer hour. Default = 0.

[m] Integer minute. Default = 0.

[s] Integer second (32-bit). Default = 0.

[s_i8] Integer second (large, 64-bit). Default = 0.

[ms] Integer millisecond. Default = 0.

[us] Integer microsecond. Default = 0.

[ns] Integer nanosecond. Default = 0.

[d_r8] Double precision day. Default = 0.0.

[h_r8] Double precision hour. Default = 0.0.

[m_r8] Double precision minute. Default = 0.0.

[s_r8] Double precision second. Default = 0.0.

[ms_r8] Double precision millisecond. Default = 0.0.

[us_r8] Double precision microsecond. Default = 0.0.

[ns_r8] Double precision nanosecond. Default = 0.0.

[sN] Integer numerator of fractional second (sN/sD). Default = 0.

[sN_i8] Integer numerator of fractional second (sN_i8/sD_i8) (large, 64-bit). Default = 0.

[sD] Integer denominator of fractional second (sN/sD). Default = 1.

[sD_i8] Integer denominator of fractional second (sN_i8/sD_i8). (large, 64-bit). Default = 1.

[rc] Return code; equals `ESMF_SUCCESS` if there are no errors.

45.4.24 ESMF_TimeIntervalSet - Initialize or set a TimeInterval

INTERFACE:

```
! Private name; call using ESMF_TimeIntervalSet()
subroutine ESMF_TimeIntervalSetDurCal(timeinterval, calendar, &
  &
  yy, yy_i8, &
  mm, mm_i8, &
  d, d_i8, &
  h, m, &
  s, s_i8, &
  ms, us, ns, &
  d_r8, h_r8, m_r8, s_r8, &
  ms_r8, us_r8, ns_r8, &
  sN, sN_i8, sD, sD_i8, rc)
```

ARGUMENTS:

```
      type(ESMF_TimeInterval), intent(inout)         :: timeinterval
      type(ESMF_Calendar),     intent(in)            :: calendar
 -- The following arguments require argument keyword syntax (e.g. rc=rc). --
      integer(ESMF_KIND_I4),   intent(in),  optional :: yy
      integer(ESMF_KIND_I8),   intent(in),  optional :: yy_i8
      integer(ESMF_KIND_I4),   intent(in),  optional :: mm
      integer(ESMF_KIND_I8),   intent(in),  optional :: mm_i8
      integer(ESMF_KIND_I4),   intent(in),  optional :: d
      integer(ESMF_KIND_I8),   intent(in),  optional :: d_i8
      integer(ESMF_KIND_I4),   intent(in),  optional :: h
      integer(ESMF_KIND_I4),   intent(in),  optional :: m
      integer(ESMF_KIND_I4),   intent(in),  optional :: s
      integer(ESMF_KIND_I8),   intent(in),  optional :: s_i8
      integer(ESMF_KIND_I4),   intent(in),  optional :: ms
      integer(ESMF_KIND_I4),   intent(in),  optional :: us
      integer(ESMF_KIND_I4),   intent(in),  optional :: ns
      real(ESMF_KIND_R8),      intent(in),  optional :: d_r8
      real(ESMF_KIND_R8),      intent(in),  optional :: h_r8
      real(ESMF_KIND_R8),      intent(in),  optional :: m_r8
      real(ESMF_KIND_R8),      intent(in),  optional :: s_r8
      real(ESMF_KIND_R8),      intent(in),  optional :: ms_r8
      real(ESMF_KIND_R8),      intent(in),  optional :: us_r8
      real(ESMF_KIND_R8),      intent(in),  optional :: ns_r8
      integer(ESMF_KIND_I4),   intent(in),  optional :: sN
      integer(ESMF_KIND_I8),   intent(in),  optional :: sN_i8
      integer(ESMF_KIND_I4),   intent(in),  optional :: sD
      integer(ESMF_KIND_I8),   intent(in),  optional :: sD_i8
      integer,                 intent(out), optional :: rc
```

STATUS:

- This interface is backward compatible with ESMF versions starting at 5.2.0r. If code using this interface compiles with any version of ESMF starting with 5.2.0r, then it will compile with the current version.

DESCRIPTION:

Sets the value of the `ESMF_TimeInterval` in units specified by the user via Fortran optional arguments.

The ESMF Time Manager represents and manipulates time internally with integers to maintain precision. Hence, user-specified floating point values are converted internally to integers.

Ranges are limited only by machine word size. Numeric defaults are 0, except for sD, which is 1.

The arguments are:

timeinterval The object instance to initialize.

calendar `Calendar` used to give better definition to calendar interval (yy, mm, and/or d) for arithmetic, comparison, and conversion operations. Allows calendar interval to "float" across all times on a specific calendar. Default = NULL; if startTime also not specified, calendar interval "floats" across all calendars and times. Mutually exclusive with startTime since it contains a calendar. Alternate to, and mutually exclusive with, calkindflag below. Primarily for specifying a custom calendar kind.

[yy] Integer year (32-bit). Default = 0.

[yy_i8] Integer year (large, 64-bit). Default = 0.

[mm] Integer month (32-bit). Default = 0.

[mm_i8] Integer month (large, 64-bit). Default = 0.

[d] Integer Julian day, or Modified Julian day (32-bit). Default = 0.

[d_i8] Integer Julian day, or Modified Julian day (large, 64-bit). Default = 0.

[h] Integer hour. Default = 0.

[m] Integer minute. Default = 0.

[s] Integer second (32-bit). Default = 0.

[s_i8] Integer second (large, 64-bit). Default = 0.

[ms] Integer millisecond. Default = 0.

[us] Integer microsecond. Default = 0.

[ns] Integer nanosecond. Default = 0.

[d_r8] Double precision day. Default = 0.0.

[h_r8] Double precision hour. Default = 0.0.

[m_r8] Double precision minute. Default = 0.0.

[s_r8] Double precision second. Default = 0.0.

[ms_r8] Double precision millisecond. Default = 0.0.

[us_r8] Double precision microsecond. Default = 0.0.

[ns_r8] Double precision nanosecond. Default = 0.0.

[sN] Integer numerator of fractional second (sN/sD). Default = 0.

[sN_i8] Integer numerator of fractional second (sN_i8/sD_i8). (large, 64-bit). Default = 0.

[sD] Integer denominator of fractional second (sN/sD). Default = 1.

[sD_i8] Integer denominator of fractional second (sN_i8/sD_i8). (large, 64-bit). Default = 1.

[rc] Return code; equals `ESMF_SUCCESS` if there are no errors.

45.4.25 ESMF_TimeIntervalSet - Initialize or set a TimeInterval

INTERFACE:

```
! Private name; call using ESMF_TimeIntervalSet()
subroutine ESMF_TimeIntervalSetDurCalTyp(timeinterval, calkindflag, &
  &
  yy, yy_i8, &
  mm, mm_i8, &
  d, d_i8, &
  h, m, &
  s, s_i8, &
  ms, us, ns, &
  d_r8, h_r8, m_r8, s_r8, &
  ms_r8, us_r8, ns_r8, &
  sN, sN_i8, sD, sD_i8, &
  rc)
```

ARGUMENTS:

```
      type(ESMF_TimeInterval), intent(inout)         :: timeinterval
      type(ESMF_CalKind_Flag), intent(in)            :: calkindflag
 -- The following arguments require argument keyword syntax (e.g. rc=rc). --
      integer(ESMF_KIND_I4),   intent(in),  optional :: yy
      integer(ESMF_KIND_I8),   intent(in),  optional :: yy_i8
      integer(ESMF_KIND_I4),   intent(in),  optional :: mm
      integer(ESMF_KIND_I8),   intent(in),  optional :: mm_i8
      integer(ESMF_KIND_I4),   intent(in),  optional :: d
      integer(ESMF_KIND_I8),   intent(in),  optional :: d_i8
      integer(ESMF_KIND_I4),   intent(in),  optional :: h
      integer(ESMF_KIND_I4),   intent(in),  optional :: m
      integer(ESMF_KIND_I4),   intent(in),  optional :: s
      integer(ESMF_KIND_I8),   intent(in),  optional :: s_i8
      integer(ESMF_KIND_I4),   intent(in),  optional :: ms
      integer(ESMF_KIND_I4),   intent(in),  optional :: us
      integer(ESMF_KIND_I4),   intent(in),  optional :: ns
      real(ESMF_KIND_R8),      intent(in),  optional :: d_r8
      real(ESMF_KIND_R8),      intent(in),  optional :: h_r8
      real(ESMF_KIND_R8),      intent(in),  optional :: m_r8
      real(ESMF_KIND_R8),      intent(in),  optional :: s_r8
      real(ESMF_KIND_R8),      intent(in),  optional :: ms_r8
      real(ESMF_KIND_R8),      intent(in),  optional :: us_r8
      real(ESMF_KIND_R8),      intent(in),  optional :: ns_r8
      integer(ESMF_KIND_I4),   intent(in),  optional :: sN
```

```
integer(ESMF_KIND_I8),   intent(in),  optional :: sN_i8
integer(ESMF_KIND_I4),   intent(in),  optional :: sD
integer(ESMF_KIND_I8),   intent(in),  optional :: sD_i8
integer,                 intent(out), optional :: rc
```

STATUS:

- This interface is backward compatible with ESMF versions starting at 5.2.0r. If code using this interface compiles with any version of ESMF starting with 5.2.0r, then it will compile with the current version.

DESCRIPTION:

Sets the value of the `ESMF_TimeInterval` in units specified by the user via Fortran optional arguments.

The ESMF Time Manager represents and manipulates time internally with integers to maintain precision. Hence, user-specified floating point values are converted internally to integers.

Ranges are limited only by machine word size. Numeric defaults are 0, except for sD, which is 1.

The arguments are:

timeinterval The object instance to initialize.

calkindflag Alternate to, and mutually exclusive with, calendar above. More convenient way of specifying a built-in calendar kind.

[yy] Integer year (32-bit). Default = 0.

[yy_i8] Integer year (large, 64-bit). Default = 0.

[mm] Integer month (32-bit). Default = 0.

[mm_i8] Integer month (large, 64-bit). Default = 0.

[d] Integer Julian day, or Modified Julian day (32-bit). Default = 0.

[d_i8] Integer Julian day, or Modified Julian day (large, 64-bit). Default = 0.

[h] Integer hour. Default = 0.

[m] Integer minute. Default = 0.

[s] Integer second (32-bit). Default = 0.

[s_i8] Integer second (large, 64-bit). Default = 0.

[ms] Integer millisecond. Default = 0.

[us] Integer microsecond. Default = 0.

[ns] Integer nanosecond. Default = 0.

[d_r8] Double precision day. Default = 0.0.

[h_r8] Double precision hour. Default = 0.0.

[m_r8] Double precision minute. Default = 0.0.

[s_r8] Double precision second. Default = 0.0.

[ms_r8] Double precision millisecond. Default = 0.0.

[us_r8] Double precision microsecond. Default = 0.0.

[ns_r8] Double precision nanoseconds. Default = 0.0.

[sN] Integer numerator of fractional second (sN/sD). Default = 0.

[sN_i8] Integer numerator of fractional second (sN_i8/sD_i8) (large, 64-bit). Default = 0.

[sD] Integer denominator of fractional second (sN/sD). Default = 1.

[sD_i8] Integer denominator of fractional second (sN_i8/sD_i8) (large, 64-bit). Default = 1.

[rc] Return code; equals `ESMF_SUCCESS` if there are no errors.

45.4.26 ESMF_TimeIntervalSet - Initialize or set a TimeInterval from an ISO 8601 format string

INTERFACE:

```
Private name; call using ESMF_TimeIntervalSet()

    subroutine ESMF_TimeIntervalSetStr(timeinterval, timeIntervalString, rc)
```

ARGUMENTS:

```
    type(ESMF_TimeInterval), intent(inout)         :: timeinterval
    character(*),            intent(in)            :: timeIntervalString
    integer,                 intent(out), optional :: rc
```

DESCRIPTION:

Sets the value of an `ESMF_TimeInterval` using a string in ISO 8601 duration format P[y]Y[mm]M[d]DT[h]H[m]M[s]S. See [24] and [14] for information about the format. In ESMF's implementation the time values can have the following types:

y - the number of years expressed in up to a 64-bit integer

mm - the number of months expressed in up to a 64-bit integer

d - the number of days expressed in up to a 64-bit integer or a 64-bit floating point value (double)

h - the number of hours expressed in up to a 32-bit integer or a 64-bit floating point value (double)

m - the number of minutes expressed in up to a 32-bit integer or a 64-bit floating point value (double)

s - the number of seconds expressed in up to a 64-bit integer or a 64-bit floating point value (double)

As with the ISO format, in ESMF's implementation the specifier and value can be left out if the value is 0. For example, P1YT1H3M4S is a valid format if the number of months and days are both 0. The time part including the T can also be left off if the time values are all 0, so P1Y is a valid string if just 1 year is being specified.

The arguments are:

timeinterval The object instance to initialize.

timeIntervalString ISO 8601 format duration string (e.g. P[y]Y[mm]M[d]DT[h]H[m]M[s]S).

[rc] Return code; equals `ESMF_SUCCESS` if there are no errors.

45.4.27 ESMF_TimeIntervalSet - Initialize or set a TimeInterval from an ISO 8601 format string and calendar

INTERFACE:

```
! Private name; call using ESMF_TimeIntervalSet()
subroutine ESMF_TimeIntervalSetStrCal(timeinterval, calendar, &
     timeIntervalString, rc)
```

ARGUMENTS:

```
type(ESMF_TimeInterval), intent(inout)         :: timeinterval
type(ESMF_Calendar),     intent(in)            :: calendar
character(*),            intent(in)            :: timeIntervalString
integer,                 intent(out), optional :: rc
```

DESCRIPTION:

Sets the value of an `ESMF_TimeInterval` using a string in ISO 8601 duration format P[y]Y[mm]M[d]DT[h]H[m]M[s]S. See [24] and [14] for information about the format. Also, see the description for the method `ESMF_TimeIntervalSetStr()` 45.4.26 for the specific types supported by ESMF for the values in the duration string.

The arguments are:

timeinterval The object instance to initialize.

calendar `Calendar` used to give better definition to calendar interval (yy, mm, and/or d) for arithmetic, comparison, and conversion operations. Allows calendar interval to "float" across all times on a specific calendar. Default = NULL; if startTime also not specified, calendar interval "floats" across all calendars and times. Mutually exclusive with startTime since it contains a calendar. Alternate to, and mutually exclusive with, calkindflag below. Primarily for specifying a custom calendar kind.

timeIntervalString ISO 8601 format duration string (e.g. P[y]Y[mm]M[d]DT[h]H[m]M[s]S).

[rc] Return code; equals `ESMF_SUCCESS` if there are no errors.

45.4.28 ESMF_TimeIntervalSet - Initialize or set a TimeInterval from an ISO 8601 format string and calendar kind

INTERFACE:

```
! Private name; call using ESMF_TimeIntervalSet()
subroutine ESMF_TimeIntervalSetStrCalTyp(timeinterval, calkindflag, &
     timeIntervalString, rc)
```

ARGUMENTS:

```
type(ESMF_TimeInterval), intent(inout)         :: timeinterval
type(ESMF_CalKind_Flag), intent(in)            :: calkindflag
character(*),            intent(in)            :: timeIntervalString
integer,                 intent(out), optional :: rc
```

DESCRIPTION:

Sets the value of an `ESMF_TimeInterval` using a string in ISO 8601 duration format P[y]Y[mm]M[d]DT[h]H[m]M[s]S. See [24] and [14] for information about the format. Also, see the description for the method `ESMF_TimeIntervalSetStr()` 45.4.26 for the specific types supported by ESMF for the values in the duration string.

The arguments are:

timeinterval The object instance to initialize.

calkindflag Alternate to, and mutually exclusive with, calendar above. More convenient way of specifying a built-in calendar kind.

timeIntervalString ISO 8601 format duration string (e.g. P[y]Y[mm]M[d]DT[h]H[m]M[s]S).

[rc] Return code; equals `ESMF_SUCCESS` if there are no errors.

45.4.29 ESMF_TimeIntervalSet - Initialize or set a TimeInterval from an ISO 8601 format string and start time

INTERFACE:

```
! Private name; call using ESMF_TimeIntervalSet()
subroutine ESMF_TimeIntervalSetStrStart(timeinterval, startTime, &
     timeIntervalString, rc)
```

ARGUMENTS:

```
type(ESMF_TimeInterval), intent(inout)         :: timeinterval
type(ESMF_Time),         intent(in)            :: startTime
character(*),            intent(in)            :: timeIntervalString
integer,                 intent(out), optional :: rc
```

DESCRIPTION:

Sets the value of an `ESMF_TimeInterval` using a string in ISO 8601 duration format P[y]Y[mm]M[d]DT[h]H[m]M[s]S. See [24] and [14] for information about the format. Also, see the description for the method `ESMF_TimeIntervalSetStr()` 45.4.26 for the specific types supported by ESMF for the values in the duration string.

The arguments are:

timeinterval The object instance to initialize.

startTime Starting time of an absolute calendar interval (yy, mm, and/or d); pins a calendar interval to a specific point in time. If not set, and calendar also not set, calendar interval "floats" across all calendars and times.

timeIntervalString ISO 8601 format duration string (e.g. P[y]Y[mm]M[d]DT[h]H[m]M[s]S).

[rc] Return code; equals `ESMF_SUCCESS` if there are no errors.

45.4.30 ESMF_TimeIntervalValidate - Validate a TimeInterval

INTERFACE:

```
subroutine ESMF_TimeIntervalValidate(timeinterval, rc)
```

ARGUMENTS:

```
   type(ESMF_TimeInterval), intent(in)            :: timeinterval
-- The following arguments require argument keyword syntax (e.g. rc=rc). --
   integer,                 intent(out), optional :: rc
```

STATUS:

- This interface is backward compatible with ESMF versions starting at 5.2.0r. If code using this interface compiles with any version of ESMF starting with 5.2.0r, then it will compile with the current version.

DESCRIPTION:

Checks whether a `timeinterval` is valid. If fractional value, denominator must be non-zero.

The arguments are:

timeinterval `ESMF_TimeInterval` to be validated.

[rc] Return code; equals `ESMF_SUCCESS` if there are no errors.

46 Clock Class

46.1 Description

The Clock class advances model time and tracks its associated date on a specified Calendar. It stores start time, stop time, current time, previous time, and a time step. It can also store a reference time, typically the time instant at which a simulation originally began. For a restart run, the reference time can be different than the start time, when the application execution resumes.

A user can call the `ESMF_ClockSet` method and reset the time step as desired.

A Clock also stores a list of Alarms, which can be set to flag events that occur at a specified time instant or at a specified time interval. See Section 47.1 for details on how to use Alarms.

There are methods for setting and getting the Times and Alarms associated with a Clock. Methods are defined for advancing the Clock's current time, checking if the stop time has been reached, reversing direction, and synchronizing with a real clock.

46.2 Constants

46.2.1 ESMF_DIRECTION

DESCRIPTION:

Specifies the time-stepping direction of a clock. Use with "direction" argument to methods `ESMF_ClockSet()` and `ESMF_ClockGet()`. Cannot be used with method `ESMF_ClockCreate()`, since it only initializes a clock in the default forward mode; a clock must be advanced (timestepped) at least once before reversing direction via `ESMF_ClockSet()`. This also holds true for negative timestep clocks which are initialized (created) with stopTime < startTime, since "forward" means timestepping from startTime towards stopTime (see `ESMF_DIRECTION_FORWARD` below).

"Forward" and "reverse" directions are distinct from positive and negative timesteps. "Forward" means timestepping in the direction established at `ESMF_ClockCreate()`, from startTime towards stopTime, regardless of the timestep sign. "Reverse" means timestepping in the opposite direction, back towards the clock's startTime, regardless of the timestep sign.

Clocks and alarms run in reverse in such a way that the state of a clock and its alarms after each time step is precisely replicated as it was in forward time-stepping mode. All methods which query clock and alarm state will return the same result for a given timeStep, regardless of the direction of arrival.

The type of this flag is:

`type(ESMF_Direction_Flag)`

The valid values are:

ESMF_DIRECTION_FORWARD Upon calling `ESMF_ClockAdvance()`, the clock will timestep from its startTime toward its stopTime. This is the default direction. A user can use either `ESMF_ClockIsStopTime()` or `ESMF_ClockIsDone()` methods to determine when stopTime is reached. This forward behavior also holds for negative timestep clocks which are initialized (created) with stopTime < startTime.

ESMF_DIRECTION_REVERSE Upon calling `ESMF_ClockAdvance()`, the clock will timestep backwards toward its startTime. Use method `ESMF_ClockIsDone()` to determine when startTime is reached. This reverse

behavior also holds for negative timestep clocks which are initialized (created) with stopTime < startTime.

46.3 Use and Examples

The following is a typical sequence for using a Clock in a geophysical model.

At initialize:

- Set a Calendar.
- Set start time, stop time and time step as Times and Time Intervals.
- Create and Initialize a Clock using the start time, stop time and time step.
- Define Times and Time Intervals associated with special events, and use these to set Alarms.

At run:

- Advance the Clock, checking for ringing alarms as needed.
- Check if it is time to stop.

At finalize:

- Since Clocks and Alarms are deep classes, they need to be explicitly destroyed at finalization. Times and TimeIntervals are lightweight classes, so they don't need explicit destruction.

The following code example illustrates Clock usage.

```
! !PROGRAM: ESMF_ClockEx - Clock initialization and time-stepping
!
! !DESCRIPTION:
!
! This program shows an example of how to create, initialize, advance, and
! examine a basic clock
!-----------------------------------------------------------------------------
#include "ESMF.h"

      ! ESMF Framework module
      use ESMF
      use ESMF_TestMod
      implicit none

      ! instantiate a clock
      type(ESMF_Clock) :: clock

      ! instantiate time_step, start and stop times
      type(ESMF_TimeInterval) :: timeStep
      type(ESMF_Time) :: startTime
      type(ESMF_Time) :: stopTime

      ! local variables for Get methods
```

```
type(ESMF_Time) :: currTime
integer(ESMF_KIND_I8) :: advanceCount
integer :: YY, MM, DD, H, M, S

! return code
integer :: rc

! initialize ESMF framework
call ESMF_Initialize(defaultCalKind=ESMF_CALKIND_GREGORIAN, &
  defaultlogfilename="ClockEx.Log", &
              logkindflag=ESMF_LOGKIND_MULTI, rc=rc)
```

46.3.1 Clock creation

This example shows how to create and initialize an `ESMF_Clock`.

```
! initialize time interval to 2 days, 4 hours (6 timesteps in 13 days)
call ESMF_TimeIntervalSet(timeStep, d=2, h=4, rc=rc)

! initialize start time to 4/1/2003 2:24:00 ( 1/10 of a day )
call ESMF_TimeSet(startTime, yy=2003, mm=4, dd=1, h=2, m=24, rc=rc)

! initialize stop time to 4/14/2003 2:24:00 ( 1/10 of a day )
call ESMF_TimeSet(stopTime, yy=2003, mm=4, dd=14, h=2, m=24, rc=rc)

! initialize the clock with the above values
clock = ESMF_ClockCreate(timeStep, startTime, stopTime=stopTime, &
                         name="Clock 1", rc=rc)
```

46.3.2 Clock advance

This example shows how to time-step an `ESMF_Clock`.

```
! time step clock from start time to stop time
do while (.not.ESMF_ClockIsStopTime(clock, rc=rc))

  call ESMF_ClockPrint(clock, options="currTime string", rc=rc)

  call ESMF_ClockAdvance(clock, rc=rc)

end do
```

46.3.3 Clock examination

This example shows how to examine an `ESMF_Clock`.

```
! get the clock's final current time
call ESMF_ClockGet(clock, currTime=currTime, rc=rc)
```

```
call ESMF_TimeGet(currTime, yy=YY, mm=MM, dd=DD, h=H, m=M, s=S, rc=rc)
print *, "The clock's final current time is ", YY, "/", MM, "/", DD, &
         " ", H, ":", M, ":", S

! get the number of times the clock was advanced
call ESMF_ClockGet(clock, advanceCount=advanceCount, rc=rc)
print *, "The clock was advanced ", advanceCount, " times."
```

46.3.4 Clock reversal

This example shows how to time-step an `ESMF_Clock` in reverse mode.

```
call ESMF_ClockSet(clock, direction=ESMF_DIRECTION_REVERSE, rc=rc)

! time step clock in reverse from stop time back to start time;
!  note use of ESMF_ClockIsDone() rather than ESMF_ClockIsStopTime()
do while (.not.ESMF_ClockIsDone(clock, rc=rc))

  call ESMF_ClockPrint(clock, options="currTime string", rc=rc)

  call ESMF_ClockAdvance(clock, rc=rc)

end do
```

46.3.5 Clock destruction

This example shows how to destroy an `ESMF_Clock`.

```
! destroy clock
call ESMF_ClockDestroy(clock, rc=rc)

! finalize ESMF framework
call ESMF_Finalize(rc=rc)

end program ESMF_ClockEx
```

46.4 Restrictions and Future Work

1. **Alarm list allocation factor** The alarm list within a clock is dynamically allocated automatically, 200 alarm references at a time. This constant is defined in both Fortran and C++ with a #define for ease of modification.

2. **Clock variable timesteps in reverse**

   In order for a clock with variable timesteps to be run in `ESMF_DIRECTION_REVERSE`, the user must supply those timesteps to `ESMF_ClockAdvance()`. Essentially, the user must save the timesteps while in forward mode. In a future release, the Time Manager will assume this responsibility by saving the clock state (including the timeStep) at every timestep while in forward mode.

46.5 Class API

46.5.1 ESMF_ClockAssignment(=) - Assign a Clock to another Clock

INTERFACE:

```
interface assignment(=)
clock1 = clock2
```

ARGUMENTS:

```
type(ESMF_Clock) :: clock1
type(ESMF_Clock) :: clock2
```

STATUS:

- This interface is backward compatible with ESMF versions starting at 5.2.0r. If code using this interface compiles with any version of ESMF starting with 5.2.0r, then it will compile with the current version.

DESCRIPTION:

Assign `clock1` as an alias to the same `ESMF_Clock` object in memory as `clock2`. If `clock2` is invalid, then `clock1` will be equally invalid after the assignment.

The arguments are:

clock1 The `ESMF_Clock` object on the left hand side of the assignment.

clock2 The `ESMF_Clock` object on the right hand side of the assignment.

46.5.2 ESMF_ClockOperator(==) - Test if Clock 1 is equal to Clock 2

INTERFACE:

```
interface operator(==)
if (clock1 == clock2) then ... endif
             OR
result = (clock1 == clock2)
```

RETURN VALUE:

```
logical :: result
```

ARGUMENTS:

```
type(ESMF_Clock), intent(in) :: clock1
type(ESMF_Clock), intent(in) :: clock2
```

DESCRIPTION:

Overloads the (==) operator for the `ESMF_Clock` class. Compare two clocks for equality; return `.true.` if equal, `.false.` otherwise. Comparison is based on IDs, which are distinct for newly created clocks and identical for clocks created as copies.

If either side of the equality test is not in the `ESMF_INIT_CREATED` status an error will be logged. However, this does not affect the return value, which is `.true.` when both sides are in the *same* status, and `.false.` otherwise.

The arguments are:

clock1 The `ESMF_Clock` object on the left hand side of the equality operation.

clock2 The `ESMF_Clock` object on the right hand side of the equality operation.

46.5.3 ESMF_ClockOperator(/=) - Test if Clock 1 is not equal to Clock 2

INTERFACE:

```
interface operator(/=)
if (clock1 /= clock2) then ... endif
             OR
result = (clock1 /= clock2)
```

RETURN VALUE:

```
logical :: result
```

ARGUMENTS:

```
type(ESMF_Clock), intent(in) :: clock1
type(ESMF_Clock), intent(in) :: clock2
```

DESCRIPTION:

Overloads the (/=) operator for the `ESMF_Clock` class. Compare two clocks for inequality; return `.true.` if not equal, `.false.` otherwise. Comparison is based on IDs, which are distinct for newly created clocks and identical for clocks created as copies.

If either side of the equality test is not in the `ESMF_INIT_CREATED` status an error will be logged. However, this does not affect the return value, which is `.true.` when both sides are *not* in the *same* status, and `.false.` otherwise.

The arguments are:

clock1 The `ESMF_Clock` object on the left hand side of the non-equality operation.

clock2 The `ESMF_Clock` object on the right hand side of the non-equality operation.

46.5.4 ESMF_ClockAdvance - Advance a Clock's current time by one time step

INTERFACE:

```
subroutine ESMF_ClockAdvance(clock, &
  timeStep, ringingAlarmList, ringingAlarmCount, rc)
```

ARGUMENTS:

```
      type(ESMF_Clock),        intent(inout)         :: clock
 -- The following arguments require argument keyword syntax (e.g. rc=rc). --
      type(ESMF_TimeInterval), intent(in),  optional :: timeStep
      type(ESMF_Alarm),        intent(out), optional :: ringingAlarmList(:)
      integer,                 intent(out), optional :: ringingAlarmCount
      integer,                 intent(out), optional :: rc
```

STATUS:

- This interface is backward compatible with ESMF versions starting at 5.2.0r. If code using this interface compiles with any version of ESMF starting with 5.2.0r, then it will compile with the current version.

DESCRIPTION:

Advances the `clock`'s current time by one time step: either the `clock`'s, or the passed-in `timeStep` (see below). When the `clock` is in `ESMF_DIRECTION_FORWARD` (default), this method adds the `timeStep` to the `clock`'s current time. In `ESMF_DIRECTION_REVERSE`, `timeStep` is subtracted from the current time. In either case, `timeStep` can be positive or negative. See the "direction" argument in method `ESMF_ClockSet()`. `ESMF_ClockAdvance()` optionally returns a list and number of ringing `ESMF_Alarm`s. See also method `ESMF_ClockGetRingingAlarms()`.

The arguments are:

clock The object instance to advance.

[timeStep] Time step is performed with given timeStep, instead of the `ESMF_Clock`'s. Does not replace the `ESMF_Clock`'s timeStep; use `ESMF_ClockSet(clock, timeStep, ...)` for this purpose. Supports applications with variable time steps. timeStep can be positive or negative.

[ringingAlarmList] Returns the array of alarms that are ringing after the time step.

[ringingAlarmCount] The number of alarms ringing after the time step.

[rc] Return code; equals `ESMF_SUCCESS` if there are no errors.

46.5.5 ESMF_ClockCreate - Create a new ESMF Clock

INTERFACE:

```
! Private name; call using ESMF_ClockCreate()
function ESMF_ClockCreateNew(timeStep, startTime, &
  stopTime, runDuration, runTimeStepCount, refTime, repeatDuration, name, rc)
```

RETURN VALUE:

```
type(ESMF_Clock) :: ESMF_ClockCreateNew
```

ARGUMENTS:

```
      type(ESMF_TimeInterval), intent(in)            :: timeStep
      type(ESMF_Time),         intent(in)            :: startTime
 -- The following arguments require argument keyword syntax (e.g. rc=rc). --
      type(ESMF_Time),         intent(in),  optional :: stopTime
      type(ESMF_TimeInterval), intent(in),  optional :: runDuration
      integer,                 intent(in),  optional :: runTimeStepCount
      type(ESMF_Time),         intent(in),  optional :: refTime
      type(ESMF_TimeInterval), intent(in),  optional :: repeatDuration
      character (len=*),       intent(in),  optional :: name
      integer,                 intent(out), optional :: rc
```

STATUS:

- This interface is backward compatible with ESMF versions starting at 5.2.0r. If code using this interface compiles with any version of ESMF starting with 5.2.0r, then it will compile with the current version.
- This interface was modified since ESMF version 5.2.0r. The fact that code using this interface compiles with the current ESMF version does not guarantee that it compiles with previous versions of this interface. If user code compatibility with version 5.2.0r is desired then care must be taken to limit the use of this interface to features that were available in the 5.2.0r release.
  Changes made after the 5.2.0r release:

  8.7.0 Added argument `repeatDuration`. The new argument allows the user to specify that they want the clock to be a repeat clock and repeatedly go through the same interval of time.

DESCRIPTION:

Creates and sets the initial values in a new `ESMF_Clock`.

The arguments are:

timeStep The `ESMF_Clock`'s time step interval, which can be positive or negative.

startTime The `ESMF_Clock`'s starting time. Can be less than or or greater than stopTime, depending on a positive or negative timeStep, respectively, and whether a stopTime is specified; see below.

[stopTime] The `ESMF_Clock`'s stopping time. Can be greater than or less than the startTime, depending on a positive or negative timeStep, respectively. If neither stopTime, runDuration, nor runTimeStepCount is specified, clock runs "forever"; user must use other means to know when to stop (e.g. ESMF_Alarm or ESMF_ClockGet(clock, currTime)). Mutually exclusive with runDuration and runTimeStepCount.

[runDuration] Alternative way to specify `ESMF_Clock`'s stopping time; stopTime = startTime + runDuration. Can be positive or negative, consistent with the timeStep's sign. Mutually exclusive with stopTime and runTimeStepCount.

[runTimeStepCount] Alternative way to specify `ESMF_Clock`'s stopping time; stopTime = startTime + (runTimeStepCount * timeStep). stopTime can be before startTime if timeStep is negative. Mutually exclusive with stopTime and runDuration.

[refTime] The `ESMF_Clock`'s reference time. Provides reference point for simulation time (see currSimTime in ESMF_ClockGet() below).

[repeatDuration] If specified and not 0, then makes `ESMF_Clock` a repeating clock that stays within the range of `startTime` to `startTime+repeatDuration`. For example, when advancing if the current time goes past `startTime+repeatDuration`, then it resets back to `startTime` to continue. Currently, the repeat functionality is not supported with clocks that run backwards (e.g. that have a negative timeStep).

[name] The name for the newly created clock. If not specified, a default unique name will be generated: "ClockNNN" where NNN is a unique sequence number from 001 to 999.

[rc] Return code; equals `ESMF_SUCCESS` if there are no errors.

46.5.6 ESMF_ClockCreate - Create a copy of an existing ESMF Clock

INTERFACE:

```
! Private name; call using ESMF_ClockCreate()
function ESMF_ClockCreateCopy(clock, rc)
```

RETURN VALUE:

```
type(ESMF_Clock) :: ESMF_ClockCreateCopy
```

ARGUMENTS:

```
    type(ESMF_Clock), intent(in)            :: clock
-- The following arguments require argument keyword syntax (e.g. rc=rc). --
    integer,          intent(out), optional :: rc
```

STATUS:

- This interface is backward compatible with ESMF versions starting at 5.2.0r. If code using this interface compiles with any version of ESMF starting with 5.2.0r, then it will compile with the current version.

DESCRIPTION:

Creates a deep copy of a given `ESMF_Clock`, but does not copy its list of `ESMF_Alarm`s (pointers), since an `ESMF_Alarm` can only be associated with one `ESMF_Clock`. Hence, the returned `ESMF_Clock` copy has no

associated ESMF_Alarms, the same as with a newly created ESMF_Clock. If desired, new ESMF_Alarms must be created and associated with this copied ESMF_Clock via ESMF_AlarmCreate(), or existing ESMF_Alarms must be re-associated with this copied ESMF_Clock via ESMF_AlarmSet(...clock=...).

The arguments are:

clock The ESMF_Clock to copy.

[rc] Return code; equals ESMF_SUCCESS if there are no errors.

46.5.7 ESMF_ClockDestroy - Release resources associated with a Clock

INTERFACE:

```
      subroutine ESMF_ClockDestroy(clock, rc)
```

ARGUMENTS:

```
      type(ESMF_Clock), intent(inout)          :: clock
 -- The following arguments require argument keyword syntax (e.g. rc=rc). --
      integer,          intent(out),  optional :: rc
```

STATUS:

- This interface is backward compatible with ESMF versions starting at 5.2.0r. If code using this interface compiles with any version of ESMF starting with 5.2.0r, then it will compile with the current version.

DESCRIPTION:

Releases resources associated with this ESMF_Clock. This releases the list of associated ESMF_Alarms (pointers), but not the ESMF_Alarms themselves; the user must explicitly call ESMF_AlarmDestroy() on each ESMF_Alarm to release its resources. ESMF_ClockDestroy() and corresponding ESMF_AlarmDestroy()s can be called in either order.

If ESMF_ClockDestroy() is called before ESMF_AlarmDestroy(), any ESMF_Alarms that were in the ESMF_Clock's list will no longer be associated with any ESMF_Clock. If desired, these "orphaned" ESMF_Alarms can be associated with a different ESMF_Clock via a call to ESMF_AlarmSet(...clock=...).

The arguments are:

clock Release resources associated with this ESMF_Clock and mark the object as invalid. It is an error to pass this object into any other routines after being destroyed.

[rc] Return code; equals ESMF_SUCCESS if there are no errors.

46.5.8 ESMF_ClockGet - Get a Clock's properties

INTERFACE:

```
subroutine ESMF_ClockGet(clock, &
  timeStep, startTime, stopTime, &
  runDuration, runTimeStepCount, refTime, currTime, prevTime, &
  currSimTime, prevSimTime, calendar, calkindflag, timeZone, &
  advanceCount, alarmCount, direction, repeatDuration, repeatCount, &
  name, rc)
```

ARGUMENTS:

```
      type(ESMF_Clock),        intent(in)            :: clock
 -- The following arguments require argument keyword syntax (e.g. rc=rc). --
      type(ESMF_TimeInterval), intent(out), optional :: timeStep
      type(ESMF_Time),         intent(out), optional :: startTime
      type(ESMF_Time),         intent(out), optional :: stopTime
      type(ESMF_TimeInterval), intent(out), optional :: runDuration
      real(ESMF_KIND_R8),      intent(out), optional :: runTimeStepCount
      type(ESMF_Time),         intent(out), optional :: refTime
      type(ESMF_Time),         intent(out), optional :: currTime
      type(ESMF_Time),         intent(out), optional :: prevTime
      type(ESMF_TimeInterval), intent(out), optional :: currSimTime
      type(ESMF_TimeInterval), intent(out), optional :: prevSimTime
      type(ESMF_Calendar),     intent(out), optional :: calendar
      type(ESMF_CalKind_Flag), intent(out), optional :: calkindflag
      integer,                 intent(out), optional :: timeZone
      integer(ESMF_KIND_I8),   intent(out), optional :: advanceCount
      integer,                 intent(out), optional :: alarmCount
      type(ESMF_Direction_Flag),    intent(out), optional :: direction
      type(ESMF_TimeInterval), intent(out), optional :: repeatDuration
      integer(ESMF_KIND_I8),   intent(out), optional :: repeatCount
      character (len=*),       intent(out), optional :: name
      integer,                 intent(out), optional :: rc
```

STATUS:

- This interface is backward compatible with ESMF versions starting at 5.2.0r. If code using this interface compiles with any version of ESMF starting with 5.2.0r, then it will compile with the current version.
- This interface was modified since ESMF version 5.2.0r. The fact that code using this interface compiles with the current ESMF version does not guarantee that it compiles with previous versions of this interface. If user code compatibility with version 5.2.0r is desired then care must be taken to limit the use of this interface to features that were available in the 5.2.0r release.
  Changes made after the 5.2.0r release:

  8.7.0 Added arguments `repeatDuration` and `repeatCount`. The argument `repeatDuration` allows the user to get information about how far the clock will advance before repeating. The argument `repeatCount` tells how many times the clock has repeated.

DESCRIPTION:

Gets one or more of the properties of an `ESMF_Clock`.

The arguments are:

clock The object instance to query.

[timeStep] The `ESMF_Clock`'s time step interval.

[startTime] The `ESMF_Clock`'s starting time.

[stopTime] The `ESMF_Clock`'s stopping time.

[runDuration] Alternative way to get `ESMF_Clock`'s stopping time; runDuration = stopTime - startTime.

[runTimeStepCount] Alternative way to get `ESMF_Clock`'s stopping time; runTimeStepCount = (stopTime - startTime) / timeStep.

[refTime] The `ESMF_Clock`'s reference time.

[currTime] The `ESMF_Clock`'s current time.

[prevTime] The `ESMF_Clock`'s previous time. Equals currTime at the previous time step.

[currSimTime] The current simulation time (currTime - refTime).

[prevSimTime] The previous simulation time. Equals currSimTime at the previous time step.

[calendar] The `Calendar` on which all the `Clock`'s times are defined.

[calkindflag] The `CalKind_Flag` on which all the `Clock`'s times are defined.

[timeZone] The timezone within which all the `Clock`'s times are defined.

[advanceCount] The number of times the `ESMF_Clock` has been advanced. Increments in `ESMF_DIRECTION_FORWARD` and decrements in `ESMF_DIRECTION_REVERSE`; see "direction" argument below and in `ESMF_ClockSet()`.

[alarmCount] The number of `ESMF_Alarm`s in the `ESMF_Clock`'s `ESMF_Alarm` list.

[direction] The `ESMF_Clock`'s time stepping direction. See also `ESMF_ClockIsReverse()`, an alternative for convenient use in "if" and "do while" constructs.

[repeatDuration] If not 0, then tells how long the clock will advance before going back to startTime. If 0, then the clock is not a repeat clock.

[repeatCount] If this clock is a repeat clock, then gives the number of times this clock has gone back to startTime.

[name] The name of this clock.

[rc] Return code; equals `ESMF_SUCCESS` if there are no errors.

46.5.9 ESMF_ClockGetAlarm - Get an Alarm in a Clock's Alarm list

INTERFACE:

```
subroutine ESMF_ClockGetAlarm(clock, alarmname, alarm, &
  rc)
```

ARGUMENTS:

```
      type(ESMF_Clock),  intent(in)            :: clock
      character (len=*), intent(in)            :: alarmname
      type(ESMF_Alarm),  intent(out)           :: alarm
 -- The following arguments require argument keyword syntax (e.g. rc=rc). --
      integer,           intent(out), optional :: rc
```

STATUS:

- This interface is backward compatible with ESMF versions starting at 5.2.0r. If code using this interface compiles with any version of ESMF starting with 5.2.0r, then it will compile with the current version.

DESCRIPTION:

Gets the `alarm` whose name is the value of alarmname in the `clock`'s `ESMF_Alarm` list.

The arguments are:

clock The object instance to get the `ESMF_Alarm` from.

alarmname The name of the desired `ESMF_Alarm`.

alarm The desired alarm.

[rc] Return code; equals `ESMF_SUCCESS` if there are no errors.

46.5.10 ESMF_ClockGetAlarmList - Get a list of Alarms from a Clock

INTERFACE:

```
subroutine ESMF_ClockGetAlarmList(clock, alarmlistflag, &
  timeStep, alarmList, alarmCount, rc)
```

ARGUMENTS:

```
      type(ESMF_Clock),          intent(in)            :: clock
      type(ESMF_AlarmList_Flag), intent(in)            :: alarmlistflag
 -- The following arguments require argument keyword syntax (e.g. rc=rc). --
      type(ESMF_TimeInterval),   intent(in),  optional :: timeStep
      type(ESMF_Alarm),          intent(out), optional :: alarmList(:)
      integer,                   intent(out), optional :: alarmCount
      integer,                   intent(out), optional :: rc
```

STATUS:

- This interface is backward compatible with ESMF versions starting at 5.2.0r. If code using this interface compiles with any version of ESMF starting with 5.2.0r, then it will compile with the current version.

DESCRIPTION:

Gets the `clock`'s list of alarms and/or number of alarms.

The arguments are:

clock The object instance from which to get an `ESMF_Alarm` list and/or count of `ESMF_Alarm`s.

alarmlistflag The kind of list to get:

`ESMF_ALARMLIST_ALL` : Returns the `ESMF_Clock`'s entire list of alarms.

`ESMF_ALARMLIST_NEXTRINGING` : Return only those alarms that will ring upon the next `clock` time step. Can optionally specify argument `timeStep` (see below) to use instead of the `clock`'s. See also method `ESMF_AlarmWillRingNext()` for checking a single alarm.

`ESMF_ALARMLIST_PREVRINGING`:

Return only those alarms that were ringing on the previous `ESMF_Clock` time step. See also method `ESMF_AlarmWasPrevRinging()` for checking a single alarm.

`ESMF_ALARMLIST_RINGING` : Returns only those `clock` alarms that are currently ringing. See also method `ESMF_ClockAdvance()` for getting the list of ringing alarms subsequent to a time step. See also method `ESMF_AlarmIsRinging()` for checking a single alarm.

[timeStep] Optional time step to be used instead of the `clock`'s. Only used with `ESMF_ALARMLIST_NEXTRINGING` `alarmlistflag` (see above); ignored if specified with other `alarmlistflags`.

[alarmList] The array of returned alarms. If given, the array must be large enough to hold the number of alarms of the specified `alarmlistflag` in the specified `clock`.

[alarmCount] If specified, returns the number of `ESMF_Alarm`s of the specified `alarmlistflag` in the specified `clock`.

[rc] Return code; equals `ESMF_SUCCESS` if there are no errors.

46.5.11 ESMF_ClockGetNextTime - Calculate a Clock's next time

INTERFACE:

```
subroutine ESMF_ClockGetNextTime(clock, nextTime, &
  timeStep, rc)
```

ARGUMENTS:

```
      type(ESMF_Clock),        intent(in)            :: clock
      type(ESMF_Time),         intent(out)           :: nextTime
 -- The following arguments require argument keyword syntax (e.g. rc=rc). --
      type(ESMF_TimeInterval), intent(in),  optional :: timeStep
      integer,                 intent(out), optional :: rc
```

STATUS:

- This interface is backward compatible with ESMF versions starting at 5.2.0r. If code using this interface compiles with any version of ESMF starting with 5.2.0r, then it will compile with the current version.

DESCRIPTION:

Calculates what the next time of the `clock` will be, based on the `clock`'s current time step or an optionally passed-in `timeStep`.

The arguments are:

clock The object instance for which to get the next time.

nextTime The resulting `ESMF_Clock`'s next time.

[timeStep] The time step interval to use instead of the clock's.

[rc] Return code; equals `ESMF_SUCCESS` if there are no errors.

46.5.12 ESMF_ClockIsCreated - Check whether a Clock object has been created

INTERFACE:

```
function ESMF_ClockIsCreated(clock, rc)
```

RETURN VALUE:

```
logical :: ESMF_ClockIsCreated
```

ARGUMENTS:

```
     type(ESMF_Clock), intent(in)            :: clock
 -- The following arguments require argument keyword syntax (e.g. rc=rc). --
     integer,             intent(out), optional :: rc
```

DESCRIPTION:

Return `.true.` if the `clock` has been created. Otherwise return `.false.`. If an error occurs, i.e. `rc /= ESMF_SUCCESS` is returned, the return value of the function will also be `.false.`.

The arguments are:

clock `ESMF_Clock` queried.

[rc] Return code; equals `ESMF_SUCCESS` if there are no errors.

46.5.13 ESMF_ClockIsDone - Based on its direction, test if the Clock has reached or exceeded its stop time or start time

INTERFACE:

```
function ESMF_ClockIsDone(clock, rc)
```

RETURN VALUE:

```
logical :: ESMF_ClockIsDone
```

ARGUMENTS:

```
      type(ESMF_Clock), intent(in)            :: clock
 -- The following arguments require argument keyword syntax (e.g. rc=rc). --
      integer,          intent(out), optional :: rc
```

STATUS:

- This interface is backward compatible with ESMF versions starting at 5.2.0r. If code using this interface compiles with any version of ESMF starting with 5.2.0r, then it will compile with the current version.

DESCRIPTION:

Returns true if currentTime is greater than or equal to stopTime in `ESMF_DIRECTION_FORWARD`, or if currentTime is less than or equal to startTime in `ESMF_DIRECTION_REVERSE`. It returns false otherwise.

The arguments are:

clock The object instance to check.

[rc] Return code; equals `ESMF_SUCCESS` if there are no errors.

46.5.14 ESMF_ClockIsReverse - Test if the Clock is in reverse mode

INTERFACE:

```
function ESMF_ClockIsReverse(clock, rc)
```

RETURN VALUE:

```
logical :: ESMF_ClockIsReverse
```

ARGUMENTS:

```
    type(ESMF_Clock), intent(in)            :: clock
-- The following arguments require argument keyword syntax (e.g. rc=rc). --
    integer,          intent(out), optional :: rc
```

STATUS:

- This interface is backward compatible with ESMF versions starting at 5.2.0r. If code using this interface compiles with any version of ESMF starting with 5.2.0r, then it will compile with the current version.

DESCRIPTION:

Returns true if clock is in `ESMF_DIRECTION_REVERSE`, and false if in `ESMF_DIRECTION_FORWARD`. Allows convenient use in "if" and "do while" constructs. Alternative to `ESMF_ClockGet(...direction=...)`.

The arguments are:

clock The object instance to check.

[rc] Return code; equals `ESMF_SUCCESS` if there are no errors.

46.5.15 ESMF_ClockIsStopTime - Test if the Clock has reached or exceeded its stop time

INTERFACE:

```
function ESMF_ClockIsStopTime(clock, rc)
```

RETURN VALUE:

```
logical :: ESMF_ClockIsStopTime
```

ARGUMENTS:

```
      type(ESMF_Clock), intent(in)            :: clock
 -- The following arguments require argument keyword syntax (e.g. rc=rc). --
      integer,          intent(out), optional :: rc
```

STATUS:

- This interface is backward compatible with ESMF versions starting at 5.2.0r. If code using this interface compiles with any version of ESMF starting with 5.2.0r, then it will compile with the current version.

DESCRIPTION:

Returns true if the `clock` has reached or exceeded its stop time, and false otherwise.

The arguments are:

clock The object instance to check.

[rc] Return code; equals `ESMF_SUCCESS` if there are no errors.

46.5.16 ESMF_ClockIsStopTimeEnabled - Test if the Clock's stop time is enabled

INTERFACE:

```
      function ESMF_ClockIsStopTimeEnabled(clock, rc)
```

RETURN VALUE:

```
      logical :: ESMF_ClockIsStopTimeEnabled
```

ARGUMENTS:

```
      type(ESMF_Clock), intent(in)            :: clock
 -- The following arguments require argument keyword syntax (e.g. rc=rc). --
      integer,          intent(out), optional :: rc
```

STATUS:

- This interface is backward compatible with ESMF versions starting at 5.2.0r. If code using this interface compiles with any version of ESMF starting with 5.2.0r, then it will compile with the current version.

DESCRIPTION:

Returns true if the `clock`'s stop time is set and enabled, and false otherwise.

The arguments are:

clock The object instance to check.

[rc] Return code; equals `ESMF_SUCCESS` if there are no errors.

46.5.17 ESMF_ClockPrint - Print Clock information

INTERFACE:

```
subroutine ESMF_ClockPrint(clock, options, preString, unit, rc)
```

ARGUMENTS:

```
      type(ESMF_Clock),  intent(in)            :: clock
 -- The following arguments require argument keyword syntax (e.g. rc=rc). --
      character (len=*), intent(in),  optional :: options
      character(*),      intent(in),  optional :: preString
      character(*),      intent(out), optional :: unit
      integer,           intent(out), optional :: rc
```

DESCRIPTION:

Prints out an `ESMF_Clock`'s properties to `stdout`, in support of testing and debugging. The options control the type of information and level of detail.

The arguments are:

clock `ESMF_Clock` to be printed out.

[options] Print options. If none specified, prints all `clock` property values.
"advanceCount" - print the number of times the clock has been advanced.
"alarmCount" - print the number of alarms in the clock's list.
"alarmList" - print the clock's alarm list.
"currTime" - print the current clock time.
"direction" - print the clock's timestep direction.
"name" - print the clock's name.
"prevTime" - print the previous clock time.
"refTime" - print the clock's reference time.
"startTime" - print the clock's start time.
"stopTime" - print the clock's stop time.
"timeStep" - print the clock's time step.

[preString] Optionally prepended string. Default to empty string.

[unit] Internal unit, i.e. a string. Default to printing to stdout.

[rc] Return code; equals `ESMF_SUCCESS` if there are no errors.

46.5.18 ESMF_ClockSet - Set one or more properties of a Clock

INTERFACE:

```
subroutine ESMF_ClockSet(clock, &
  timeStep, startTime, stopTime, &
  runDuration, runTimeStepCount, refTime, currTime, advanceCount, &
  direction, name, rc)
```

ARGUMENTS:

```
      type(ESMF_Clock),        intent(inout)         :: clock
 -- The following arguments require argument keyword syntax (e.g. rc=rc). --
      type(ESMF_TimeInterval), intent(in),  optional :: timeStep
      type(ESMF_Time),         intent(in),  optional :: startTime
      type(ESMF_Time),         intent(in),  optional :: stopTime
      type(ESMF_TimeInterval), intent(in),  optional :: runDuration
      integer,                 intent(in),  optional :: runTimeStepCount
      type(ESMF_Time),         intent(in),  optional :: refTime
      type(ESMF_Time),         intent(in),  optional :: currTime
      integer(ESMF_KIND_I8),   intent(in),  optional :: advanceCount
      type(ESMF_Direction_Flag),    intent(in),  optional :: direction
      character (len=*),       intent(in),  optional :: name
      integer,                 intent(out), optional :: rc
```

STATUS:

- This interface is backward compatible with ESMF versions starting at 5.2.0r. If code using this interface compiles with any version of ESMF starting with 5.2.0r, then it will compile with the current version.

DESCRIPTION:

Sets/resets one or more of the properties of an `ESMF_Clock` that was previously initialized via `ESMF_ClockCreate()`.

The arguments are:

clock The object instance to set.

[timeStep] The `ESMF_Clock`'s time step interval, which can be positive or negative. This is used to change a clock's timestep property for those applications that need variable timesteps. See `ESMF_ClockAdvance()` below for specifying variable timesteps that are NOT saved as the clock's internal time step property. See "direction" argument below for behavior with
t ESMF_DIRECTION_REVERSE direction.

[startTime] The `ESMF_Clock`'s starting time. Can be less than or or greater than stopTime, depending on a positive or negative timeStep, respectively, and whether a stopTime is specified; see below.

[stopTime] The `ESMF_Clock`'s stopping time. Can be greater than or less than the startTime, depending on a positive or negative timeStep, respectively. If neither stopTime, runDuration, nor runTimeStepCount is specified, clock runs "forever"; user must use other means to know when to stop (e.g. ESMF_Alarm or ESMF_ClockGet(clock, currTime)). Mutually exclusive with runDuration and runTimeStepCount.

[runDuration] Alternative way to specify `ESMF_Clock`'s stopping time; stopTime = startTime + runDuration. Can be positive or negative, consistent with the timeStep's sign. Mutually exclusive with stopTime and runTimeStepCount.

[runTimeStepCount] Alternative way to specify `ESMF_Clock`'s stopping time; stopTime = startTime + (runTimeStepCount * timeStep). stopTime can be before startTime if timeStep is negative. Mutually exclusive with stopTime and runDuration.

[refTime] The `ESMF_Clock`'s reference time. See description in `ESMF_ClockCreate()` above.

[currTime] The current time.

[advanceCount] The number of times the clock has been timestepped.

[direction] Sets the clock's time-stepping direction. If called with `ESMF_DIRECTION_REVERSE`, sets the clock in "reverse" mode, causing it to timestep back towards its startTime. If called with `ESMF_DIRECTION_FORWARD`, sets the clock in normal, "forward" mode, causing it to timestep in the direction of its startTime to stopTime. This holds true for negative timestep clocks as well, which are initialized (created) with stopTime < startTime. The default mode is `ESMF_DIRECTION_FORWARD`, established at `ESMF_ClockCreate()`. timeStep can also be specified as an argument at the same time, which allows for a change in magnitude and/or sign of the clock's timeStep. If not specified with `ESMF_DIRECTION_REVERSE`, the clock's current timeStep is effectively negated. If timeStep is specified, its sign is used as specified; it is not negated internally. E.g., if the specified timeStep is negative and the clock is placed in `ESMF_DIRECTION_REVERSE`, subsequent calls to `ESMF_ClockAdvance()` will cause the clock's current time to be decremented by the new timeStep's magnitude.

[name] The new name for this clock.

[rc] Return code; equals `ESMF_SUCCESS` if there are no errors.

46.5.19 ESMF_ClockStopTimeDisable - Disable a Clock's stop time

INTERFACE:

```
      subroutine ESMF_ClockStopTimeDisable(clock, rc)
```

ARGUMENTS:

```
      type(ESMF_Clock), intent(inout)         :: clock
 -- The following arguments require argument keyword syntax (e.g. rc=rc). --
      integer,          intent(out), optional :: rc
```

STATUS:

- This interface is backward compatible with ESMF versions starting at 5.2.0r. If code using this interface compiles with any version of ESMF starting with 5.2.0r, then it will compile with the current version.

DESCRIPTION:

Disables a `ESMF_Clock`'s stop time; `ESMF_ClockIsStopTime()` will always return false, allowing a clock to run past its stopTime.

The arguments are:

clock The object instance whose stop time to disable.

[rc] Return code; equals `ESMF_SUCCESS` if there are no errors.

46.5.20 ESMF_ClockStopTimeEnable - Enable an Clock's stop time

INTERFACE:

```
      subroutine ESMF_ClockStopTimeEnable(clock, stopTime, rc)
```

ARGUMENTS:

```
      type(ESMF_Clock), intent(inout)         :: clock
 -- The following arguments require argument keyword syntax (e.g. rc=rc). --
      type(ESMF_Time),  intent(in),  optional :: stopTime
      integer,          intent(out), optional :: rc
```

STATUS:

- This interface is backward compatible with ESMF versions starting at 5.2.0r. If code using this interface compiles with any version of ESMF starting with 5.2.0r, then it will compile with the current version.

DESCRIPTION:

Enables a `ESMF_Clock`'s stop time, allowing `ESMF_ClockIsStopTime()` to respect the stopTime.

The arguments are:

clock The object instance whose stop time to enable.

[stopTime] The stop time to set or reset.

[rc] Return code; equals `ESMF_SUCCESS` if there are no errors.

46.5.21 ESMF_ClockSyncToRealTime - Set Clock's current time to wall clock time

INTERFACE:

```
subroutine ESMF_ClockSyncToRealTime(clock, rc)
```

ARGUMENTS:

```
    type(ESMF_Clock), intent(inout)         :: clock
-- The following arguments require argument keyword syntax (e.g. rc=rc). --
    integer,          intent(out), optional :: rc
```

STATUS:

- This interface is backward compatible with ESMF versions starting at 5.2.0r. If code using this interface compiles with any version of ESMF starting with 5.2.0r, then it will compile with the current version.

DESCRIPTION:

Sets a `clock`'s current time to the wall clock time. It is accurate to the nearest second.

The arguments are:

clock The object instance to be synchronized with wall clock time.

[rc] Return code; equals `ESMF_SUCCESS` if there are no errors.

46.5.22 ESMF_ClockValidate - Validate a Clock's properties

INTERFACE:

```
subroutine ESMF_ClockValidate(clock, rc)
```

ARGUMENTS:

```
    type(ESMF_Clock),  intent(in)            :: clock
-- The following arguments require argument keyword syntax (e.g. rc=rc). --
    integer,           intent(out), optional :: rc
```

STATUS:

- This interface is backward compatible with ESMF versions starting at 5.2.0r. If code using this interface compiles with any version of ESMF starting with 5.2.0r, then it will compile with the current version.

DESCRIPTION:

Checks whether a `clock` is valid. Must have a valid startTime and timeStep. If `clock` has a stopTime, its currTime must be within startTime to stopTime, inclusive; also startTime's and stopTime's calendars must be the same.

The arguments are:

clock `ESMF_Clock` to be validated.

[rc] Return code; equals `ESMF_SUCCESS` if there are no errors.

47 Alarm Class

47.1 Description

The Alarm class identifies events that occur at specific Times or specific TimeIntervals by returning a true value at those times or subsequent times, and a false value otherwise.

47.2 Constants

47.2.1 ESMF_ALARMLIST

DESCRIPTION:
Specifies the characteristics of Alarms that populate a retrieved Alarm list.

The type of this flag is:

`type(ESMF_AlarmList_Flag)`

The valid values are:

ESMF_ALARMLIST_ALL All alarms.

ESMF_ALARMLIST_NEXTRINGING Alarms that will ring before or at the next timestep.

ESMF_ALARMLIST_PREVRINGING Alarms that rang at or since the last timestep.

ESMF_ALARMLIST_RINGING Only ringing alarms.

47.3 Use and Examples

Alarms are used in conjunction with Clocks (see Section 46.1). Multiple Alarms can be associated with a Clock. During the `ESMF_ClockAdvance()` method, a Clock iterates over its internal Alarms to determine if any are ringing. Alarms ring when a specified Alarm time is reached or exceeded, taking into account whether the time step is positive or negative. In `ESMF_DIRECTION_REVERSE` (see Section 46.1), alarms ring in reverse, i.e., they begin ringing when they originally ended, and end ringing when they originally began. On completion of the time advance call, the Clock optionally returns a list of ringing alarms.

Each ringing Alarm can then be processed using Alarm methods for identifying, turning off, disabling or resetting the Alarm.

Alarm methods are defined for obtaining the ringing state, turning the ringer on/off, enabling/disabling the Alarm, and getting/setting associated times.

The following example shows how to set and process Alarms.

```
! !PROGRAM: ESMF_AlarmEx - Alarm examples
!
! !DESCRIPTION:
!
! This program shows an example of how to create, initialize, and process
! alarms associated with a clock.
!-----------------------------------------------------------------------------
```

```
#include "ESMF.h"

      ! ESMF Framework module
      use ESMF
      use ESMF_TestMod
      implicit none

      ! instantiate time_step, start, stop, and alarm times
      type(ESMF_TimeInterval) :: timeStep, alarmInterval
      type(ESMF_Time) :: alarmTime, startTime, stopTime

      ! instantiate a clock
      type(ESMF_Clock) :: clock

      ! instantiate Alarm lists
      integer, parameter :: NUMALARMS = 2
      type(ESMF_Alarm) :: alarm(NUMALARMS)

      ! local variables for Get methods
      integer :: ringingAlarmCount  ! at any time step (0 to NUMALARMS)

      ! name, loop counter, result code
      character (len=ESMF_MAXSTR) :: name
      integer :: i, rc, result


      ! initialize ESMF framework
      call ESMF_Initialize(defaultCalKind=ESMF_CALKIND_GREGORIAN, &
        defaultlogfilename="AlarmEx.Log", &
        logkindflag=ESMF_LOGKIND_MULTI, rc=rc)
```

47.3.1 Clock initialization

This example shows how to create and initialize an `ESMF_Clock`.

```
      ! initialize time interval to 1 day
      call ESMF_TimeIntervalSet(timeStep, d=1, rc=rc)


      ! initialize start time to 9/1/2003
      call ESMF_TimeSet(startTime, yy=2003, mm=9, dd=1, rc=rc)


      ! initialize stop time to 9/30/2003
      call ESMF_TimeSet(stopTime, yy=2003, mm=9, dd=30, rc=rc)


      ! create & initialize the clock with the above values
      clock = ESMF_ClockCreate(timeStep, startTime, stopTime=stopTime, &
                               name="The Clock", rc=rc)
```

47.3.2 Alarm initialization

This example shows how to create and initialize two `ESMF_Alarms` and associate them with the clock.

```
! Initialize first alarm to be a one-shot on 9/15/2003 and associate
! it with the clock
call ESMF_TimeSet(alarmTime, yy=2003, mm=9, dd=15, rc=rc)

alarm(1) = ESMF_AlarmCreate(clock, &
   ringTime=alarmTime, name="Example alarm 1", rc=rc)

! Initialize second alarm to ring on a 1 week interval starting 9/1/2003
! and associate it with the clock
call ESMF_TimeSet(alarmTime, yy=2003, mm=9, dd=1, rc=rc)

call ESMF_TimeIntervalSet(alarmInterval, d=7, rc=rc)

! Alarm gets default name "Alarm002"
alarm(2) = ESMF_AlarmCreate(clock=clock, ringTime=alarmTime, &
                            ringInterval=alarmInterval, rc=rc)
```

47.3.3 Clock advance and Alarm processing

This example shows how to advance an `ESMF_Clock` and process any resulting ringing alarms.

```
! time step clock from start time to stop time
do while (.not.ESMF_ClockIsStopTime(clock, rc=rc))

  ! perform time step and get the number of any ringing alarms
  call ESMF_ClockAdvance(clock, ringingAlarmCount=ringingAlarmCount, &
                         rc=rc)

  call ESMF_ClockPrint(clock, options="currTime string", rc=rc)

  ! check if alarms are ringing
  if (ringingAlarmCount > 0) then
    print *, "number of ringing alarms = ", ringingAlarmCount

    do i = 1, NUMALARMS
      if (ESMF_AlarmIsRinging(alarm(i), rc=rc)) then

        call ESMF_AlarmGet(alarm(i), name=name, rc=rc)
        print *, trim(name), " is ringing!"

        ! after processing alarm, turn it off
        call ESMF_AlarmRingerOff(alarm(i), rc=rc)

      end if ! this alarm is ringing
    end do ! each ringing alarm
  endif ! ringing alarms
end do ! timestep clock
```

47.3.4 Alarm and Clock destruction

This example shows how to destroy `ESMF_Alarms` and `ESMF_Clocks`.

```
call ESMF_AlarmDestroy(alarm(1), rc=rc)

call ESMF_AlarmDestroy(alarm(2), rc=rc)

call ESMF_ClockDestroy(clock, rc=rc)

! finalize ESMF framework
call ESMF_Finalize(rc=rc)

end program ESMF_AlarmEx
```

47.4 Restrictions and Future Work

1. **Alarm list allocation factor** The alarm list within a clock is dynamically allocated automatically, 200 alarm references at a time. This constant is defined in both Fortran and C++ with a #define for ease of modification.

2. **Sticky alarm end times in reverse** For sticky alarms, there is an implicit limitation that in order to properly reverse timestep through a ring end time, that time must have already been traversed in the forward direction. This is due to the fact that the Time Manager cannot predict when user code will call `ESMF_AlarmRingerOff()`. An error message will be logged when this limitation is not satisfied.

3. **Sticky alarm ring interval in reverse**

   For repeating sticky alarms, it is currently assumed that the ringInterval is constant, so that only the time of the last call to `ESMF_AlarmRingerOff()` is saved. In `ESMF_DIRECTION_REVERSE`, this information is used to turn sticky alarms back on. In a future release, ringIntervals will be allowed to be variable, by saving alarm state at every timestep.

47.5 Design and Implementation Notes

The Alarm class is designed as a deep, dynamically allocatable class, based on a pointer type. This allows for both indirect and direct manipulation of alarms. Indirect alarm manipulation is where ESMF_Alarm API methods, such as ESMF_AlarmRingerOff(), are invoked on alarm references (pointers) returned from ESMF_Clock queries such as "return ringing alarms." Since the method is performed on an alarm reference, the actual alarm held by the clock is affected, not just a user's local copy. Direct alarm manipulation is the more common case where alarm API methods are invoked on the original alarm objects created by the user.

For consistency, the ESMF_Clock class is also designed as a deep, dynamically allocatable class.

An additional benefit from this approach is that Clocks and Alarms can be created and used from anywhere in a user's code without regard to the scope in which they were created. In contrast, statically created Alarms and Clocks would disappear if created within a user's routine that returns, whereas dynamically allocated Alarms and Clocks will persist until explicitly destroyed by the user.

47.6 Class API

47.6.1 ESMF_AlarmAssignment(=) - Assign an Alarm to another Alarm

INTERFACE:

```
interface assignment(=)
alarm1 = alarm2
```

ARGUMENTS:

```
type(ESMF_Alarm) :: alarm1
type(ESMF_Alarm) :: alarm2
```

STATUS:

- This interface is backward compatible with ESMF versions starting at 5.2.0r. If code using this interface compiles with any version of ESMF starting with 5.2.0r, then it will compile with the current version.

DESCRIPTION:

Assign `alarm1` as an alias to the same `ESMF_Alarm` object in memory as `alarm2`. If `alarm2` is invalid, then `alarm1` will be equally invalid after the assignment.

The arguments are:

alarm1 The `ESMF_Alarm` object on the left hand side of the assignment.

alarm2 The `ESMF_Alarm` object on the right hand side of the assignment.

47.6.2 ESMF_AlarmOperator(==) - Test if Alarm 1 is equal to Alarm 2

INTERFACE:

```
interface operator(==)
if (alarm1 == alarm2) then ... endif
             OR
result = (alarm1 == alarm2)
```

RETURN VALUE:

```
logical :: result
```

ARGUMENTS:

```
type(ESMF_Alarm), intent(in) :: alarm1
type(ESMF_Alarm), intent(in) :: alarm2
```

DESCRIPTION:

Overloads the (==) operator for the `ESMF_Alarm` class. Compare two alarms for equality; return `.true.` if equal, `.false.` otherwise. Comparison is based on IDs, which are distinct for newly created alarms and identical for alarms created as copies.

If either side of the equality test is not in the `ESMF_INIT_CREATED` status an error will be logged. However, this does not affect the return value, which is `.true.` when both sides are in the *same* status, and `.false.` otherwise.

The arguments are:

alarm1 The `ESMF_Alarm` object on the left hand side of the equality operation.

alarm2 The `ESMF_Alarm` object on the right hand side of the equality operation.

47.6.3 ESMF_AlarmOperator(/=) - Test if Alarm 1 is not equal to Alarm 2

INTERFACE:

```
interface operator(/=)
if (alarm1 /= alarm2) then ... endif
             OR
result = (alarm1 /= alarm2)
```

RETURN VALUE:

```
logical :: result
```

ARGUMENTS:

```
type(ESMF_Alarm), intent(in) :: alarm1
type(ESMF_Alarm), intent(in) :: alarm2
```

DESCRIPTION:

Overloads the (/=) operator for the `ESMF_Alarm` class. Compare two alarms for inequality; return `.true.` if not equal, `.false.` otherwise. Comparison is based on IDs, which are distinct for newly created alarms and identical for alarms created as copies.

If either side of the equality test is not in the `ESMF_INIT_CREATED` status an error will be logged. However, this does not affect the return value, which is `.true.` when both sides are *not* in the *same* status, and `.false.` otherwise.

The arguments are:

alarm1 The `ESMF_Alarm` object on the left hand side of the non-equality operation.

alarm2 The `ESMF_Alarm` object on the right hand side of the non-equality operation.

47.6.4 ESMF_AlarmCreate - Create a new ESMF Alarm

INTERFACE:

```
! Private name; call using ESMF_AlarmCreate()
function ESMF_AlarmCreateNew(clock, &
  ringTime, ringInterval, stopTime, ringDuration, ringTimeStepCount, &
  refTime, enabled, sticky, name, rc)
```

RETURN VALUE:

```
type(ESMF_Alarm) :: ESMF_AlarmCreateNew
```

ARGUMENTS:

```
      type(ESMF_Clock),        intent(in)            :: clock
 -- The following arguments require argument keyword syntax (e.g. rc=rc). --
      type(ESMF_Time),         intent(in),  optional :: ringTime
      type(ESMF_TimeInterval), intent(in),  optional :: ringInterval
      type(ESMF_Time),         intent(in),  optional :: stopTime
      type(ESMF_TimeInterval), intent(in),  optional :: ringDuration
      integer,                 intent(in),  optional :: ringTimeStepCount
      type(ESMF_Time),         intent(in),  optional :: refTime
      logical,                 intent(in),  optional :: enabled
      logical,                 intent(in),  optional :: sticky
      character (len=*),       intent(in),  optional :: name
      integer,                 intent(out), optional :: rc
```

STATUS:

- This interface is backward compatible with ESMF versions starting at 5.2.0r. If code using this interface compiles with any version of ESMF starting with 5.2.0r, then it will compile with the current version.

DESCRIPTION:

Creates and sets the initial values in a new `ESMF_Alarm`.

In `ESMF_DIRECTION_REVERSE` (see Section 46.1), alarms ring in reverse, i.e., they begin ringing when they originally ended, and end ringing when they originally began.

The arguments are:

clock The clock with which to associate this newly created alarm.

[ringTime] The ring time for a one-shot alarm or the first ring time for a repeating (interval) alarm. Must specify at least one of ringTime or ringInterval.

[ringInterval] The ring interval for repeating (interval) alarms. If `ringTime` is not also specified (first ring time), it will be calculated as the `clock`'s current time plus `ringInterval`. Must specify at least one of ringTime or ringInterval.

[stopTime] The stop time for repeating (interval) alarms. If not specified, an interval alarm will repeat forever.

[ringDuration] The absolute ring duration. If not sticky (see argument below), alarms rings for ringDuration, then turns itself off. Default is zero (unused). Mutually exclusive with ringTimeStepCount (below); used only if set to a non-zero duration and ringTimeStepCount is 1 (see below). See also `ESMF_AlarmSticky()`, `ESMF_AlarmNotSticky()`.

[ringTimeStepCount] The relative ring duration. If not sticky (see argument below), alarms rings for ringTimeStepCount, then turns itself off. Default is 1: a non-sticky alarm will ring for one clock time step. Mutually exclusive with ringDuration (above); used if ringTimeStepCount > 1. If ringTimeStepCount is 1 (default) and ringDuration is non-zero, ringDuration is used (see above), otherwise ringTimeStepCount is used. See also `ESMF_AlarmSticky()`, `ESMF_AlarmNotSticky()`.

[refTime] The reference (i.e. base) time for an interval alarm.

[enabled] Sets the enabled state; default is on (true). If disabled, an alarm will not function at all. See also `ESMF_AlarmEnable()`, `ESMF_AlarmDisable()`.

[sticky] Sets the sticky state; default is on (true). If sticky, once an alarm is ringing, it will remain ringing until turned off manually via a user call to `ESMF_AlarmRingerOff()`. If not sticky, an alarm will turn itself off after a certain ring duration specified by either ringDuration or ringTimeStepCount (see above). There is an implicit limitation that in order to properly reverse timestep through a ring end time in `ESMF_DIRECTION_REVERSE`, that time must have already been traversed in the forward direction. This is due to the fact that the Time Manager cannot predict when user code will call `ESMF_AlarmRingerOff()`. An error message will be logged when this limitation is not satisfied. See also `ESMF_AlarmSticky()`, `ESMF_AlarmNotSticky()`.

[name] The name for the newly created alarm. If not specified, a default unique name will be generated: "AlarmNNN" where NNN is a unique sequence number from 001 to 999.

[rc] Return code; equals `ESMF_SUCCESS` if there are no errors.

47.6.5 ESMF_AlarmCreate - Create a copy of an existing ESMF Alarm

INTERFACE:

```
! Private name; call using ESMF_AlarmCreate()
function ESMF_AlarmCreateCopy(alarm, rc)
```

RETURN VALUE:

```
type(ESMF_Alarm) :: ESMF_AlarmCreateCopy
```

ARGUMENTS:

```
    type(ESMF_Alarm), intent(in)            :: alarm
-- The following arguments require argument keyword syntax (e.g. rc=rc). --
    integer,          intent(out), optional :: rc
```

STATUS:

- This interface is backward compatible with ESMF versions starting at 5.2.0r. If code using this interface compiles with any version of ESMF starting with 5.2.0r, then it will compile with the current version.

DESCRIPTION:

Creates a complete (deep) copy of a given `ESMF_Alarm`. The returned `ESMF_Alarm` copy is associated with the same `ESMF_Clock` as the original `ESMF_Alarm`. If desired, use `ESMF_AlarmSet(...clock=...)` to re-associate the `ESMF_Alarm` copy with a different `ESMF_Clock`.

The arguments are:

alarm The `ESMF_Alarm` to copy.

[rc] Return code; equals `ESMF_SUCCESS` if there are no errors.

47.6.6 ESMF_AlarmDestroy - Release resources associated with an Alarm

INTERFACE:

```
      subroutine ESMF_AlarmDestroy(alarm, rc)
```

ARGUMENTS:

```
      type(ESMF_Alarm), intent(inout)          :: alarm
 -- The following arguments require argument keyword syntax (e.g. rc=rc). --
      integer,          intent(out),  optional :: rc
```

STATUS:

- This interface is backward compatible with ESMF versions starting at 5.2.0r. If code using this interface compiles with any version of ESMF starting with 5.2.0r, then it will compile with the current version.

DESCRIPTION:

Releases resources associated with this `ESMF_Alarm`. Also removes this `ESMF_Alarm` from its associated `ESMF_Clock`'s list of `ESMF_Alarm`s (removes the `ESMF_Alarm` pointer from the list).

The arguments are:

alarm Release resources associated with this `ESMF_Alarm` and mark the object as invalid. It is an error to pass this object into any other routines after being destroyed.

[rc] Return code; equals `ESMF_SUCCESS` if there are no errors.

47.6.7 ESMF_AlarmDisable - Disable an Alarm

INTERFACE:

```
subroutine ESMF_AlarmDisable(alarm, rc)
```

ARGUMENTS:

```
      type(ESMF_Alarm), intent(inout)         :: alarm
 -- The following arguments require argument keyword syntax (e.g. rc=rc). --
      integer,          intent(out), optional :: rc
```

STATUS:

- This interface is backward compatible with ESMF versions starting at 5.2.0r. If code using this interface compiles with any version of ESMF starting with 5.2.0r, then it will compile with the current version.

DESCRIPTION:

Disables an `ESMF_Alarm`.

The arguments are:

alarm The object instance to disable.

[rc] Return code; equals `ESMF_SUCCESS` if there are no errors.

47.6.8 ESMF_AlarmEnable - Enable an Alarm

INTERFACE:

```
subroutine ESMF_AlarmEnable(alarm, rc)
```

ARGUMENTS:

```
      type(ESMF_Alarm), intent(inout)         :: alarm
 -- The following arguments require argument keyword syntax (e.g. rc=rc). --
      integer,          intent(out), optional :: rc
```

STATUS:

- This interface is backward compatible with ESMF versions starting at 5.2.0r. If code using this interface compiles with any version of ESMF starting with 5.2.0r, then it will compile with the current version.

DESCRIPTION:

Enables an `ESMF_Alarm` to function.

The arguments are:

alarm The object instance to enable.

[rc] Return code; equals `ESMF_SUCCESS` if there are no errors.

47.6.9 ESMF_AlarmGet - Get Alarm properties

INTERFACE:

```
subroutine ESMF_AlarmGet(alarm, &
  clock, ringTime, prevRingTime, ringInterval, stopTime, ringDuration, &
  ringTimeStepCount, timeStepRingingCount, ringBegin, ringEnd, &
  refTime, ringing, ringingOnPrevTimeStep, enabled, sticky, name, rc)
```

ARGUMENTS:

```
      type(ESMF_Alarm),        intent(in)            :: alarm
 -- The following arguments require argument keyword syntax (e.g. rc=rc). --
      type(ESMF_Clock),        intent(out), optional :: clock
      type(ESMF_Time),         intent(out), optional :: ringTime
      type(ESMF_Time),         intent(out), optional :: prevRingTime
      type(ESMF_TimeInterval), intent(out), optional :: ringInterval
      type(ESMF_Time),         intent(out), optional :: stopTime
      type(ESMF_TimeInterval), intent(out), optional :: ringDuration
      integer,                 intent(out), optional :: ringTimeStepCount
      integer,                 intent(out), optional :: timeStepRingingCount
      type(ESMF_Time),         intent(out), optional :: ringBegin
      type(ESMF_Time),         intent(out), optional :: ringEnd
      type(ESMF_Time),         intent(out), optional :: refTime
      logical,                 intent(out), optional :: ringing
      logical,                 intent(out), optional :: ringingOnPrevTimeStep
      logical,                 intent(out), optional :: enabled
      logical,                 intent(out), optional :: sticky
      character (len=*),       intent(out), optional :: name
      integer,                 intent(out), optional :: rc
```

STATUS:

- This interface is backward compatible with ESMF versions starting at 5.2.0r. If code using this interface compiles with any version of ESMF starting with 5.2.0r, then it will compile with the current version.

DESCRIPTION:

Gets one or more of an `ESMF_Alarm`'s properties.

The arguments are:

alarm The object instance to query.

[clock] The associated clock.

[ringTime] The ring time for a one-shot alarm or the next repeating alarm.

[prevRingTime] The previous ring time.

[ringInterval] The ring interval for repeating (interval) alarms.

[stopTime] The stop time for repeating (interval) alarms.

[ringDuration] The ring duration. Mutually exclusive with ringTimeStepCount (see below).

[ringTimeStepCount] The number of time steps comprising the ring duration. Mutually exclusive with ringDuration (see above).

[timeStepRingingCount] The number of time steps for which the alarm has been ringing thus far. Used internally for tracking ringTimeStepCount ring durations (see above). Mutually exclusive with ringBegin (see below). Increments in `ESMF_DIRECTION_FORWARD` and decrements in `ESMF_DIRECTION_REVERSE`; see Section 46.1.

[ringBegin] The time when the alarm began ringing. Used internally for tracking ringDuration (see above). Mutually exclusive with timeStepRingingCount (see above).

[ringEnd] The time when the alarm ended ringing. Used internally for re-ringing alarm in `ESMF_DIRECTION_REVERSE`.

[refTime] The reference (i.e. base) time for an interval alarm.

[ringing] The current ringing state. See also `ESMF_AlarmRingerOn()`, `ESMF_AlarmRingerOff()`.

[ringingOnPrevTimeStep] The ringing state upon the previous time step. Same as `ESMF_AlarmWasPrevRinging()`.

[enabled] The enabled state. See also `ESMF_AlarmEnable()`, `ESMF_AlarmDisable()`.

[sticky] The sticky state. See also `ESMF_AlarmSticky()`, `ESMF_AlarmNotSticky()`.

[name] The name of this alarm.

[rc] Return code; equals `ESMF_SUCCESS` if there are no errors.

47.6.10 ESMF_AlarmIsCreated - Check whether a Alarm object has been created

INTERFACE:

```
function ESMF_AlarmIsCreated(alarm, rc)
```

RETURN VALUE:

```
logical :: ESMF_AlarmIsCreated
```

ARGUMENTS:

```
    type(ESMF_Alarm), intent(in)            :: alarm
 -- The following arguments require argument keyword syntax (e.g. rc=rc). --
    integer,             intent(out), optional :: rc
```

DESCRIPTION:

Return `.true.` if the `alarm` has been created. Otherwise return `.false.`. If an error occurs, i.e. `rc /= ESMF_SUCCESS` is returned, the return value of the function will also be `.false.`.

The arguments are:

alarm `ESMF_Alarm` queried.

[rc] Return code; equals `ESMF_SUCCESS` if there are no errors.

47.6.11 ESMF_AlarmIsEnabled - Check if Alarm is enabled

INTERFACE:

```
function ESMF_AlarmIsEnabled(alarm, rc)
```

RETURN VALUE:

```
logical :: ESMF_AlarmIsEnabled
```

ARGUMENTS:

```
    type(ESMF_Alarm), intent(in)            :: alarm
 -- The following arguments require argument keyword syntax (e.g. rc=rc). --
    integer,          intent(out), optional :: rc
```

STATUS:

- This interface is backward compatible with ESMF versions starting at 5.2.0r. If code using this interface compiles with any version of ESMF starting with 5.2.0r, then it will compile with the current version.

DESCRIPTION:

Check if `ESMF_Alarm` is enabled.

The arguments are:

alarm The object instance to check for enabled state.

[rc] Return code; equals `ESMF_SUCCESS` if there are no errors.

47.6.12 ESMF_AlarmIsRinging - Check if Alarm is ringing

INTERFACE:

```
function ESMF_AlarmIsRinging(alarm, rc)
```

RETURN VALUE:

```
logical :: ESMF_AlarmIsRinging
```

ARGUMENTS:

```
    type(ESMF_Alarm), intent(in)            :: alarm
-- The following arguments require argument keyword syntax (e.g. rc=rc). --
    integer,          intent(out), optional :: rc
```

STATUS:

- This interface is backward compatible with ESMF versions starting at 5.2.0r. If code using this interface compiles with any version of ESMF starting with 5.2.0r, then it will compile with the current version.

DESCRIPTION:

Check if `ESMF_Alarm` is ringing.

See also method `ESMF_ClockGetAlarmList(clock, ESMF_ALARMLIST_RINGING, ...)` to get a list of all ringing alarms belonging to an `ESMF_Clock`.

The arguments are:

alarm The alarm to check for ringing state.

[rc] Return code; equals `ESMF_SUCCESS` if there are no errors.

47.6.13 ESMF_AlarmIsSticky - Check if Alarm is sticky

INTERFACE:

```
function ESMF_AlarmIsSticky(alarm, rc)
```

RETURN VALUE:

```
logical :: ESMF_AlarmIsSticky
```

ARGUMENTS:

```
      type(ESMF_Alarm), intent(in)            :: alarm
 -- The following arguments require argument keyword syntax (e.g. rc=rc). --
      integer,          intent(out), optional :: rc
```

STATUS:

- This interface is backward compatible with ESMF versions starting at 5.2.0r. If code using this interface compiles with any version of ESMF starting with 5.2.0r, then it will compile with the current version.

DESCRIPTION:

Check if `alarm` is sticky.

The arguments are:

alarm The object instance to check for sticky state.

[rc] Return code; equals `ESMF_SUCCESS` if there are no errors.

47.6.14 ESMF_AlarmNotSticky - Unset an Alarm's sticky flag

INTERFACE:

```
subroutine ESMF_AlarmNotSticky(alarm, &
  ringDuration, ringTimeStepCount, rc)
```

ARGUMENTS:

```
      type(ESMF_Alarm),        intent(inout)         :: alarm
 -- The following arguments require argument keyword syntax (e.g. rc=rc). --
      type(ESMF_TimeInterval), intent(in),  optional :: ringDuration
      integer,                 intent(in),  optional :: ringTimeStepCount
      integer,                 intent(out), optional :: rc
```

STATUS:

- This interface is backward compatible with ESMF versions starting at 5.2.0r. If code using this interface compiles with any version of ESMF starting with 5.2.0r, then it will compile with the current version.

DESCRIPTION:

Unset an `ESMF_Alarm`'s sticky flag; once alarm is ringing, it turns itself off after ringDuration.

The arguments are:

alarm The object instance to unset sticky.

[ringDuration] If not sticky, alarms rings for ringDuration, then turns itself off. Mutually exclusive with ringTimeStepCount (see below and full description in method `ESMF_AlarmCreate()` or `ESMF_AlarmSet()`).

[ringTimeStepCount] If not sticky, alarms rings for ringTimeStepCount, then turns itself off. Mutually exclusive with ringDuration (see above and full description in method `ESMF_AlarmCreate()` or `ESMF_AlarmSet()`).

[rc] Return code; equals `ESMF_SUCCESS` if there are no errors.

47.6.15 ESMF_AlarmPrint - Print Alarm information

INTERFACE:

```
subroutine ESMF_AlarmPrint(alarm, options, rc)
```

ARGUMENTS:

```
type(ESMF_Alarm),  intent(in)            :: alarm
character (len=*), intent(in),  optional :: options
integer,           intent(out), optional :: rc
```

DESCRIPTION:

Prints out an `ESMF_Alarm`'s properties to `stdout`, in support of testing and debugging. The options control the type of information and level of detail.

The arguments are:

alarm `ESMF_Alarm` to be printed out.

[options] Print options. If none specified, prints all `alarm` property values.
"clock" - print the associated clock's name.
"enabled" - print the alarm's ability to ring.
"name" - print the alarm's name.
"prevRingTime" - print the alarm's previous ring time.
"ringBegin" - print time when the alarm actually begins to ring.
"ringDuration" - print how long this alarm is to remain ringing.
"ringEnd" - print time when the alarm actually ends ringing.

"ringing" - print the alarm's current ringing state.
"ringingOnPrevTimeStep" - print whether the alarm was ringing immediately after the previous clock time step.
"ringInterval" - print the alarm's periodic ring interval.
"ringTime" - print the alarm's next time to ring.
"ringTimeStepCount" - print how long this alarm is to remain ringing, in terms of a number of clock time steps.
"refTime" - print the alarm's interval reference (base) time.
"sticky" - print whether the alarm must be turned off manually.
"stopTime" - print when alarm intervals end.
"timeStepRingingCount" - print the number of time steps the alarm has been ringing thus far.

[rc] Return code; equals `ESMF_SUCCESS` if there are no errors.

47.6.16 ESMF_AlarmRingerOff - Turn off an Alarm

INTERFACE:

```
subroutine ESMF_AlarmRingerOff(alarm, rc)
```

ARGUMENTS:

```
    type(ESMF_Alarm), intent(inout)         :: alarm
-- The following arguments require argument keyword syntax (e.g. rc=rc). --
    integer,          intent(out), optional :: rc
```

STATUS:

- This interface is backward compatible with ESMF versions starting at 5.2.0r. If code using this interface compiles with any version of ESMF starting with 5.2.0r, then it will compile with the current version.

DESCRIPTION:

Turn off an `ESMF_Alarm`; unsets ringing state. For a sticky alarm, this method must be called to turn off its ringing state. This is true for either `ESMF_DIRECTION_FORWARD` (default) or `ESMF_DIRECTION_REVERSE`. See Section 46.1.

The arguments are:

alarm The object instance to turn off.

[rc] Return code; equals `ESMF_SUCCESS` if there are no errors.

47.6.17 ESMF_AlarmRingerOn - Turn on an Alarm

INTERFACE:

```
subroutine ESMF_AlarmRingerOn(alarm, rc)
```

ARGUMENTS:

```
      type(ESMF_Alarm), intent(inout)         :: alarm
 -- The following arguments require argument keyword syntax (e.g. rc=rc). --
      integer,          intent(out), optional :: rc
```

STATUS:

- This interface is backward compatible with ESMF versions starting at 5.2.0r. If code using this interface compiles with any version of ESMF starting with 5.2.0r, then it will compile with the current version.

DESCRIPTION:

Turn on an `ESMF_Alarm`; sets ringing state.

The arguments are:

alarm The object instance to turn on.

[rc] Return code; equals `ESMF_SUCCESS` if there are no errors.

47.6.18 ESMF_AlarmSet - Set Alarm properties

INTERFACE:

```
subroutine ESMF_AlarmSet(alarm, &
  clock, ringTime, ringInterval, stopTime, ringDuration, &
  ringTimeStepCount, refTime, ringing, enabled, sticky, name, rc)
```

ARGUMENTS:

```
      type(ESMF_Alarm),        intent(inout)         :: alarm
 -- The following arguments require argument keyword syntax (e.g. rc=rc). --
      type(ESMF_Clock),        intent(in),  optional :: clock
      type(ESMF_Time),         intent(in),  optional :: ringTime
      type(ESMF_TimeInterval), intent(in),  optional :: ringInterval
      type(ESMF_Time),         intent(in),  optional :: stopTime
      type(ESMF_TimeInterval), intent(in),  optional :: ringDuration
```

```
integer,                  intent(in),  optional :: ringTimeStepCount
type(ESMF_Time),          intent(in),  optional :: refTime
logical,                  intent(in),  optional :: ringing
logical,                  intent(in),  optional :: enabled
logical,                  intent(in),  optional :: sticky
character (len=*),        intent(in),  optional :: name
integer,                  intent(out), optional :: rc
```

STATUS:

- This interface is backward compatible with ESMF versions starting at 5.2.0r. If code using this interface compiles with any version of ESMF starting with 5.2.0r, then it will compile with the current version.

DESCRIPTION:

Sets/resets one or more of the properties of an `ESMF_Alarm` that was previously initialized via `ESMF_AlarmCreate()`.

The arguments are:

alarm The object instance to set.

[clock] Re-associates this alarm with a different clock.

[ringTime] The next ring time for a one-shot alarm or a repeating (interval) alarm.

[ringInterval] The ring interval for repeating (interval) alarms.

[stopTime] The stop time for repeating (interval) alarms.

[ringDuration] The absolute ring duration. If not sticky (see argument below), alarms rings for ringDuration, then turns itself off. Default is zero (unused). Mutually exclusive with ringTimeStepCount (below); used only if set to a non-zero duration and ringTimeStepCount is 1 (see below). See also `ESMF_AlarmSticky()`, `ESMF_AlarmNotSticky()`.

[ringTimeStepCount] The relative ring duration. If not sticky (see argument below), alarms rings for ringTimeStepCount, then turns itself off. Default is 1: a non-sticky alarm will ring for one clock time step. Mutually exclusive with ringDuration (above); used if ringTimeStepCount > 1. If ringTimeStepCount is 1 (default) and ringDuration is non-zero, ringDuration is used (see above), otherwise ringTimeStepCount is used. See also `ESMF_AlarmSticky()`, `ESMF_AlarmNotSticky()`.

[refTime] The reference (i.e. base) time for an interval alarm.

[ringing] Sets the ringing state. See also `ESMF_AlarmRingerOn()`, `ESMF_AlarmRingerOff()`.

[enabled] Sets the enabled state. If disabled, an alarm will not function at all. See also `ESMF_AlarmEnable()`, `ESMF_AlarmDisable()`.

[sticky] Sets the sticky state. If sticky, once an alarm is ringing, it will remain ringing until turned off manually via a user call to `ESMF_AlarmRingerOff()`. If not sticky, an alarm will turn itself off after a certain ring duration specified by either ringDuration or ringTimeStepCount (see above). There is an implicit limitation that in order to properly reverse timestep through a ring end time in `ESMF_DIRECTION_REVERSE`, that time must have already been traversed in the forward direction. This is due to the fact that the Time Manager cannot predict when user code will call `ESMF_AlarmRingerOff()`. An error message will be logged when this limitation is not satisfied. See also `ESMF_AlarmSticky()`, `ESMF_AlarmNotSticky()`.

[name] The new name for this alarm.

[rc] Return code; equals `ESMF_SUCCESS` if there are no errors.

47.6.19 ESMF_AlarmSticky - Set an Alarm's sticky flag

INTERFACE:

```
subroutine ESMF_AlarmSticky(alarm, rc)
```

ARGUMENTS:

```
    type(ESMF_Alarm), intent(inout)         :: alarm
-- The following arguments require argument keyword syntax (e.g. rc=rc). --
    integer,          intent(out), optional :: rc
```

STATUS:

- This interface is backward compatible with ESMF versions starting at 5.2.0r. If code using this interface compiles with any version of ESMF starting with 5.2.0r, then it will compile with the current version.

DESCRIPTION:

Set an `ESMF_Alarm`'s sticky flag; once alarm is ringing, it remains ringing until `ESMF_AlarmRingerOff()` is called. There is an implicit limitation that in order to properly reverse timestep through a ring end time in `ESMF_DIRECTION_REVERSE`, that time must have already been traversed in the forward direction. This is due to the fact that an `ESMF_Alarm` cannot predict when user code will call `ESMF_AlarmRingerOff()`. An error message will be logged when this limitation is not satisfied.

The arguments are:

alarm The object instance to be set sticky.

[rc] Return code; equals `ESMF_SUCCESS` if there are no errors.

47.6.20 ESMF_AlarmValidate - Validate an Alarm's properties

INTERFACE:

```
subroutine ESMF_AlarmValidate(alarm, rc)
```

ARGUMENTS:

```
      type(ESMF_Alarm),  intent(in)            :: alarm
 -- The following arguments require argument keyword syntax (e.g. rc=rc). --
      integer,           intent(out), optional :: rc
```

STATUS:

- This interface is backward compatible with ESMF versions starting at 5.2.0r. If code using this interface compiles with any version of ESMF starting with 5.2.0r, then it will compile with the current version.

DESCRIPTION:

Performs a validation check on an `ESMF_Alarm`'s properties. Must have a valid ringTime, set either directly or indirectly via ringInterval. See `ESMF_AlarmCreate()`.

The arguments are:

alarm `ESMF_Alarm` to be validated.

[rc] Return code; equals `ESMF_SUCCESS` if there are no errors.

47.6.21 ESMF_AlarmWasPrevRinging - Check if Alarm was ringing on the previous Clock timestep

INTERFACE:

```
      function ESMF_AlarmWasPrevRinging(alarm, rc)
```

RETURN VALUE:

```
      logical :: ESMF_AlarmWasPrevRinging
```

ARGUMENTS:

```
      type(ESMF_Alarm), intent(in)            :: alarm
 -- The following arguments require argument keyword syntax (e.g. rc=rc). --
      integer,          intent(out), optional :: rc
```

STATUS:

- This interface is backward compatible with ESMF versions starting at 5.2.0r. If code using this interface compiles with any version of ESMF starting with 5.2.0r, then it will compile with the current version.

DESCRIPTION:

Check if `ESMF_Alarm` was ringing on the previous clock timestep.

See also method `ESMF_ClockGetAlarmList(clock, ESMF_ALARMLIST_PREVRINGING, ...)` get a list of all alarms belonging to a `ESMF_Clock` that were ringing on the previous time step.

The arguments are:

alarm The object instance to check for previous ringing state.

[rc] Return code; equals `ESMF_SUCCESS` if there are no errors.

47.6.22 ESMF_AlarmWillRingNext - Check if Alarm will ring upon the next Clock timestep

INTERFACE:

```
function ESMF_AlarmWillRingNext(alarm, timeStep, rc)
```

RETURN VALUE:

```
logical :: ESMF_AlarmWillRingNext
```

ARGUMENTS:

```
      type(ESMF_Alarm),        intent(in)            :: alarm
 -- The following arguments require argument keyword syntax (e.g. rc=rc). --
      type(ESMF_TimeInterval), intent(in),  optional :: timeStep
      integer,                 intent(out), optional :: rc
```

STATUS:

- This interface is backward compatible with ESMF versions starting at 5.2.0r. If code using this interface compiles with any version of ESMF starting with 5.2.0r, then it will compile with the current version.

DESCRIPTION:

Check if `ESMF_Alarm` will ring on the next clock timestep, either the current clock timestep or a passed-in timestep.

See also method `ESMF_ClockGetAlarmList(clock, ESMF_ALARMLIST_NEXTRINGING, ...)` to get a list of all alarms belonging to a `ESMF_Clock` that will ring on the next time step.

The arguments are:

alarm The alarm to check for next ringing state.

[timeStep] Optional timestep to use instead of the clock's.

[rc] Return code; equals `ESMF_SUCCESS` if there are no errors.

48 Config Class

48.1 Description

ESMF Configuration Management is based on NASA DAO's Inpak 90 package, a Fortran 90 collection of routines/functions for accessing *Resource Files* in ASCII format.The package is optimized for minimizing formatted I/O, performing all of its string operations in memory using Fortran intrinsic functions.

48.1.1 Package history

The ESMF Configuration Management Package was evolved by Leonid Zaslavsky and Arlindo da Silva from Ipack90 package created by Arlindo da Silva at NASA DAO.

Back in the 70's Eli Isaacson wrote IOPACK in Fortran 66. In June of 1987 Arlindo da Silva wrote Inpak77 using Fortran 77 string functions; Inpak 77 is a vastly simplified IOPACK, but has its own goodies not found in IOPACK. Inpak 90 removes some obsolete functionality in Inpak77, and parses the whole resource file in memory for performance.

48.1.2 Resource files

A *Resource File (RF)* is a text file consisting of list of *label-value* pairs. There is a buffer limit of 256,000 characters for the entire Resource File. Each *label* is limited to 1,000 characters. Each label should be followed by some data, the *value*. An example Resource File follows. It is the file used in the example below.

```
# This is an example Resource File.
# It contains a list of <label,value> pairs.
# The colon after the label is required.

# The values after the label can be an list.
# Multiple types are authorized.

 my_file_names:         jan87.dat jan88.dat jan89.dat  # all strings
 constants:             3.1415   25                    # float and integer
 my_favorite_colors:    green blue 022


# Or, the data can be a list of single value pairs.
# It is simplier to retrieve data in this format:

 radius_of_the_earth:   6.37E6
 parameter_1:           89
 parameter_2:           78.2
 input_file_name:       dummy_input.nc


# Or, the data can be located in a table using the following
# syntax:

 my_table_name::
```

```
  1000     3000     263.0
   925     3000     263.0
   850     3000     263.0
   700     3000     269.0
   500     3000     287.0
   400     3000     295.8
   300     3000     295.8
 ::
```

Note that the colon after the label is required and that the double colon is required to declare tabular data.

Resource files are intended for random access (except between ::'s in a table definition). This means that order in which a particular *label-value* pair is retrieved is not dependent upon the original order of the pairs. The only exception to this, however, is when the same *label* appears multiple times within the Resource File.

48.2 Use and Examples

This example/test code performs simple Config/Resource File routines. It does not include attaching a Config to a component. The important thing to remember there is that you can have one Config per component.

There are two methodologies for accessing data in a Resource File. This example will demonstrate both.

Note the API section contains a complete description of arguments in the methods/functions demonstrated in this example.

48.2.1 Variable declarations

The following are the variable declarations used as arguments in the following code fragments. They represent the locals names for the variables listed in the Resource File (RF). Note they do not need to be the same.

```
character(ESMF_MAXPATHLEN) :: fname ! config file name
character(ESMF_MAXPATHLEN) :: fn1, fn2, fn3, input_file ! strings to be read in
integer       :: rc            ! error return code (0 is OK)
integer       :: i_n           ! the first constant in the RF
real          :: param_1       ! the second constant in the RF
real          :: radius        ! radius of the earth
real          :: table(7,3)    ! an array to hold the table in the RF

type(ESMF_Config)   :: cf      ! the Config itself
type(ESMF_HConfig)  :: hconfig ! HConfig variable
```

48.2.2 Creation of a Config

While there are two methodologies for accessing the data within a Resource File, there is only one way to create the initial Config and load its ASCII text into memory. This is the first step in the process.

Note that subsequent calls to `ESMF_ConfigLoadFile` will OVERWRITE the current Config NOT append to it. There is no means of appending to a Config.

```
cf = ESMF_ConfigCreate(rc=rc)             ! Create the empty Config
```

```
fname = "myResourceFile.rc"                ! Name the Resource File
call ESMF_ConfigLoadFile(cf, fname, rc=rc) ! Load the Resource File
                                           ! into the empty Config
```

48.2.3 How to retrieve a label with a single value

The first method for retrieving information from the Resource File takes advantage of the <label,value> relationship within the file and access the data in a dictionary-like manner. This is the simplest methodology, but it does imply the use of only one value per label in the Resource File.

Remember, that the order in which a particular label/value pair is retrieved is not dependent upon the order which they exist within the Resource File.

```
call ESMF_ConfigGetAttribute(cf, radius, label='radius_of_the_earth:', &
                             default=1.0, rc=rc)
```

Note that the colon must be included in the label string when using this methodology. It is also important to provide a default value in case the label does not exist in the file

This methodology works for all types. The following is an example of retrieving a string:

```
call ESMF_ConfigGetAttribute(cf, input_file, label='input_file_name:', &
                             default="./default.nc", rc=rc)
```

The same code fragment can be used to demonstrate what happens when the label is not present. Note that "file_name" does not exist in the Resource File. The result of its absence is the default value provided in the call.

```
call ESMF_ConfigGetAttribute(cf, input_file, label='file_name:', &
                             default="./default.nc", rc=rc)
```

48.2.4 How to retrieve a label with multiple values

When there are multiple, mixed-typed values associated with a label, the values can be retrieved in two steps: 1) Use ESMF_ConfigFindLabel() to find the label in the Config class; 2) use ESMF_ConfigGetAttribute() without the optional 'label' argument to retrieve the values one at a time, reading from left to right in the record.

A second reminder that the order in which a particular label/value pair is retrieved is not dependent upon the order which they exist within the Resource File. The label used in this method allows the user to skip to any point in the file.

```
call ESMF_ConfigFindLabel(cf, 'constants:', rc=rc) ! Step a) Find the
                                                   ! label
```

Two constants, radius and i_n, can now be retrieved without having to specify their label or use an array. They are also different types.

```
call ESMF_ConfigGetAttribute(cf, param_1, rc=rc) ! Step b) read in the
                                                 ! first constant in
                                                 ! the sequence
call ESMF_ConfigGetAttribute(cf, i_n, rc=rc)     ! Step c) read in the
                                                 ! second constant in
                                                 ! the sequence
```

This methodology also works with strings.

```
call ESMF_ConfigFindLabel(cf, 'my_file_names:', &
        rc=rc)                        ! Step a) find the label

call ESMF_ConfigGetAttribute(cf, fn1, &
          rc=rc)                     ! Step b) retrieve the 1st filename
call ESMF_ConfigGetAttribute(cf, fn2, &
          rc=rc)                     ! Step c) retrieve the 2nd filename
call ESMF_ConfigGetAttribute(cf, fn3, &
          rc=rc)                     ! Step d) retrieve the 3rd filename
```

48.2.5 How to retrieve a table

To access tabular data, the user must use the multi-value method.

```
call ESMF_ConfigFindLabel(cf, 'my_table_name::', &
         rc=rc)        ! Step a) Set the label location to the
                       ! beginning of the table
```

Subsequently, `call ESMF_ConfigNextLine()` is used to move the location to the next row of the table. The example table in the Resource File contains 7 rows and 3 columns (7,3).

```
do i = 1, 7
  call ESMF_ConfigNextLine(cf, rc=rc) ! Step b) Increment the rows
  do j = 1, 3                         ! Step c) Fill in the table
    call ESMF_ConfigGetAttribute(cf, table(i,j), rc=rc)
  enddo
enddo
```

48.2.6 Destruction of a Config

The work with the Config object `cf` is finalized by callling `ESMF_ConfigDestroy()`.

```
call ESMF_ConfigDestroy(cf, rc=rc) ! Destroy the Config object
```

48.2.7 Loading a YAML file

The Config class supports loading of YAML files. As before, an empty Config object is created with `ESMF_ConfigCreate()` and then populated via the `ESMF_ConfigLoadFile()` method.

```
cf = ESMF_ConfigCreate(rc=rc)          ! Create the empty Config object
```

Files ending in `.yaml`, `.yml`, or any combination of upper and lower case letters that can be mapped to these two options, are interpreted as YAML files. All other names are interpreted as classic Config *RFs* as documented earlier.

```
call ESMF_ConfigLoadFile(cf, "myResourceFile.yaml", & ! Load the YAML File
  rc=rc)                                     ! into the empty Config object
```

Here the `myResourceFile.yaml` contains a YAML version of the previously used `myResourceFile.rc` file contents:

```
# YAML representation of the myResourceFile.rc RF

# mapping to sequences

my_file_names:      [jan87.dat, jan88.dat, jan89.dat]  # all strings
constants:          [3.1415, 25]                       # float and integer
my_favorite_colors: [green, blue, 022]

# mapping to scalars

radius_of_the_earth:   6.37E6
parameter_1:           89
parameter_2:           78.2
input_file_name:       dummy_input.nc

# represent table as mapping to sequence of sequences

my_table_name:
- [1000,    3000,    263.0]
- [ 925,    3000,    263.0]
- [ 850,    3000,    263.0]
- [ 700,    3000,    269.0]
- [ 500,    3000,    287.0]
- [ 400,    3000,    295.8]
- [ 300,    3000,    295.8]
```

Notice that YAML support is limited to a small subset of the full YAML language specification, allowing access through the classic Config API. Specifically, the top level in the YAML file is expected to be a mapping (dictionary) of scalar keys to any of the following three value options:

- Scalars
- List of scalars
- List of lists of scalars

All other YAML constructs are silently ignored when loaded through this interface. Constructs successfully ingested become available in the `cf` object, and can be accessed via the regular `ESMF_Config` methods as outlined in the previous sections.

As an example, access the `my_table_name` element:

```
call ESMF_ConfigFindLabel(cf, 'my_table_name::', &
         rc=rc)        ! Step a) Set the label location to the
                       ! beginning of the table
```

When done, the resources held by the Config object are released by calling the `ESMF_ConfigDestroy()` method.

```
call ESMF_ConfigDestroy(cf, rc=rc) ! Destroy the Config object
```

48.2.8 Creating from HConfig object

The Config class supports creating a Config object from a HConfig object. Here the HConfig object is created from the same YAML file as used before.

```
! Create HConfig object
hconfig = ESMF_HConfigCreate(filename="myResourceFile.yaml", rc=rc)
```

The `myResourceFile.yaml` contains the following YAML contents:

```
# YAML representation of the myResourceFile.rc RF

# mapping to sequences

my_file_names:      [jan87.dat, jan88.dat, jan89.dat]  # all strings
constants:          [3.1415, 25]                       # float and integer
my_favorite_colors: [green, blue, 022]

# mapping to scalars

radius_of_the_earth:   6.37E6
parameter_1:           89
parameter_2:           78.2
input_file_name:       dummy_input.nc

# represent table as mapping to sequence of sequences

my_table_name:
- [1000,    3000,    263.0]
- [ 925,    3000,    263.0]
- [ 850,    3000,    263.0]
- [ 700,    3000,    269.0]
- [ 500,    3000,    287.0]
- [ 400,    3000,    295.8]
- [ 300,    3000,    295.8]
```

A Config object can be created from the HConfig object simply by passing `hconfig` into `ESMF_CreateConfig()` as argument.

```
! Create Config object from HConfig
cf = ESMF_ConfigCreate(hconfig=hconfig, rc=rc)
```

Notice that `cf` uses the specified `hconfig` object via reference. It remains the callers responsibility to destroy the `hconfig` object when finished. Care must be taken to *not* destroy until access via `cf` is complete.

Here, as an example, access the `my_table_name` element:

```
call ESMF_ConfigFindLabel(cf, 'my_table_name::', &
         rc=rc)        ! Step a) Set the label location to the
                       ! beginning of the table

call ESMF_ConfigDestroy(cf, rc=rc) ! Destroy the Config object
```

As discussed above, the `hconfig` object requires its own destroy call for a complete release.

```
call ESMF_HConfigDestroy(hconfig, rc=rc) ! Destroy the HConfig object
```

48.3 Class API

48.3.1 ESMF_ConfigAssignment(=) - Config assignment

INTERFACE:

```
interface assignment(=)
config1 = config2
```

ARGUMENTS:

```
type(ESMF_Config) :: config1
type(ESMF_Config) :: config2
```

DESCRIPTION:

Assign `config1` as an alias to the same `ESMF_Config` object in memory as `config2`. If `config2` is invalid, then `config1` will be equally invalid after the assignment.

The arguments are:

config1 The `ESMF_Config` object on the left hand side of the assignment.

config2 The `ESMF_Config` object on the right hand side of the assignment.

48.3.2 ESMF_ConfigOperator(==) - Test if Config objects are equivalent

INTERFACE:

```
interface operator(==)
if (config1 == config2) then ... endif
            OR
result = (config1 == config2)
```

RETURN VALUE:

```
configical :: result
```

ARGUMENTS:

```
type(ESMF_Config), intent(in) :: config1
type(ESMF_Config), intent(in) :: config2
```

DESCRIPTION:

Overloads the (==) operator for the `ESMF_Config` class. Compare two configs for equality; return `.true.` if equal, `.false.` otherwise. Comparison is based on whether the objects are distinct, as with two newly created objects, or are simply aliases to the same object as would be the case when assignment was involved.

The arguments are:

config1 The `ESMF_Config` object on the left hand side of the equality operation.

config2 The `ESMF_Config` object on the right hand side of the equality operation.

48.3.3 ESMF_ConfigOperator(/=) - Test if Config objects are not equivalent

INTERFACE:

```
interface operator(/=)
if (config1 /= config2) then ... endif
             OR
result = (config1 /= config2)
```

RETURN VALUE:

```
configical :: result
```

ARGUMENTS:

```
type(ESMF_Config), intent(in) :: config1
type(ESMF_Config), intent(in) :: config2
```

DESCRIPTION:

Overloads the (/=) operator for the `ESMF_Config` class. Compare two configs for equality; return `.true.` if not equivalent, `.false.` otherwise. Comparison is based on whether the Config objects are distinct, as with two newly created objects, or are simply aliases to the same object as would be the case when assignment was involved.

The arguments are:

config1 The `ESMF_Config` object on the left hand side of the equality operation.

config2 The `ESMF_Config` object on the right hand side of the equality operation.

48.3.4 ESMF_ConfigCreate - Instantiate a Config object

INTERFACE:

```
! Private name; call using ESMF_ConfigCreate()
type(ESMF_Config) function ESMF_ConfigCreateDefault(hconfig, rc)
```

ARGUMENTS:

```
-- The following arguments require argument keyword syntax (e.g. rc=rc). --
   type(ESMF_HConfig), intent(in),  optional   :: hconfig
   integer,            intent(out), optional   :: rc
```

STATUS:

- This interface is backward compatible with ESMF versions starting at 5.2.0r. If code using this interface compiles with any version of ESMF starting with 5.2.0r, then it will compile with the current version.
- This interface was modified since ESMF version 5.2.0r. The fact that code using this interface compiles with the current ESMF version does not guarantee that it compiles with previous versions of this interface. If user code compatibility with version 5.2.0r is desired then care must be taken to limit the use of this interface to features that were available in the 5.2.0r release.
  Changes made after the 5.2.0r release:

  8.6.0 Added the `hconfig` argument to support creation from HConfig object.

DESCRIPTION:

Instantiates an `ESMF_Config` object. Optionally create from HConfig.

The arguments are:

[hconfig] If specified, create Config from HConfig. By default create an empty Config object.

[rc] Return code; equals `ESMF_SUCCESS` if there are no errors.

48.3.5 ESMF_ConfigCreate - Instantiate a new Config object from a Config section

INTERFACE:

```
! Private name; call using ESMF_ConfigCreate()
type(ESMF_Config) function ESMF_ConfigCreateFromSection(config, &
  openlabel, closelabel, rc)
```

ARGUMENTS:

```
   type(ESMF_Config)             :: config
   character(len=*),  intent(in) :: openlabel, closelabel
-- The following arguments require argument keyword syntax (e.g. rc=rc). --
   integer,intent(out), optional :: rc
```

DESCRIPTION:

Instantiates an `ESMF_Config` object from a section of an existing `ESMF_Config` object delimited by `openlabel` and `closelabel`. An error is returned if neither of the input labels is found in input `config`.

Note that a section is intended as the content of a given `ESMF_Config` object delimited by two distinct labels. Such content, as well as each of the surrounding labels, are still within the scope of the parent `ESMF_Config` object. Therefore, including in a section labels used outside that section should be done carefully to prevent parsing conflicts.

The arguments are:

config The input `ESMF_Config` object.

openlabel Label marking the beginning of a section in `config`.

closelabel Label marking the end of a section in `config`.

[rc] Return code; equals `ESMF_SUCCESS` if a section is found and a new `ESMF_Config` object returned.

48.3.6 ESMF_ConfigDestroy - Destroy a Config object

INTERFACE:

```
subroutine ESMF_ConfigDestroy(config, rc)
```

ARGUMENTS:

```
      type(ESMF_Config), intent(inout)          :: config
 -- The following arguments require argument keyword syntax (e.g. rc=rc). --
      integer,           intent(out),  optional :: rc
```

STATUS:

- This interface is backward compatible with ESMF versions starting at 5.2.0r. If code using this interface compiles with any version of ESMF starting with 5.2.0r, then it will compile with the current version.

DESCRIPTION:

Destroys the `config` object.

The arguments are:

config Already created `ESMF_Config` object.

[rc] Return code; equals `ESMF_SUCCESS` if there are no errors.

48.3.7 ESMF_ConfigFindLabel - Find a label in a Config object

INTERFACE:

```
subroutine ESMF_ConfigFindLabel(config, label, isPresent, rc)
```

ARGUMENTS:

```
      type(ESMF_Config), intent(inout)           :: config
      character(len=*),  intent(in)              :: label
-- The following arguments require argument keyword syntax (e.g. rc=rc). --
      logical,           intent(out),  optional  :: isPresent
      integer,           intent(out),  optional  :: rc
```

STATUS:

- This interface is backward compatible with ESMF versions starting at 5.2.0r. If code using this interface compiles with any version of ESMF starting with 5.2.0r, then it will compile with the current version.
- This interface was modified since ESMF version 5.2.0r. The fact that code using this interface compiles with the current ESMF version does not guarantee that it compiles with previous versions of this interface. If user code compatibility with version 5.2.0r is desired then care must be taken to limit the use of this interface to features that were available in the 5.2.0r release.
  Changes made after the 5.2.0r release:

  6.1.0 Added the `isPresent` argument. Allows detection of end-of-line condition to be separate from the `rc`.

DESCRIPTION:

Finds the `label` (key) string in the `config` object starting from the beginning of its content.

Since the search is done by looking for a string, possibly multi-worded, in the whole `Config` object, it is important to use special conventions to distinguish `labels` from other words. This is done in the Resource File by using the NASA/DAO convention to finish line labels with a colon (:) and table labels with a double colon (::).

The arguments are:

config Already created `ESMF_Config` object.

label Identifying label.

[isPresent] Set to `.true.` if the item is found.

[rc] Return code; equals `ESMF_SUCCESS` if there are no errors. If the label is not found, and the `isPresent` argument is not present, an error is returned.

48.3.8 ESMF_ConfigFindNextLabel - Find a label in Config object starting from current position

INTERFACE:

```
subroutine ESMF_ConfigFindNextLabel(config, label, isPresent, rc)
```

ARGUMENTS:

```
      type(ESMF_Config), intent(inout)           :: config
      character(len=*),  intent(in)              :: label
 -- The following arguments require argument keyword syntax (e.g. rc=rc). --
      logical,           intent(out),  optional  :: isPresent
      integer,           intent(out),  optional  :: rc
```

DESCRIPTION:

Finds the `label` (key) string in the `config` object, starting from the current position pointer.

This method is equivalent to `ESMF_ConfigFindLabel`, but the search is performed starting from the current position pointer.

The arguments are:

config Already created `ESMF_Config` object.

label Identifying label.

[isPresent] Set to `.true.` if the item is found.

[rc] Return code; equals `ESMF_SUCCESS` if there are no errors. If the label is not found, and the `isPresent` argument is not present, an error is returned.

48.3.9 ESMF_ConfigGet - Generic accessor method

INTERFACE:

```
subroutine ESMF_ConfigGet(config, hconfig, rc)
```

ARGUMENTS:

```
     type(ESMF_Config),  intent(inout)          :: config
 -- The following arguments require argument keyword syntax (e.g. rc=rc). --
     type(ESMF_HConfig), intent(out),  optional :: hconfig
     integer,            intent(out),  optional :: rc
```

DESCRIPTION:

Access Config internals.

The arguments are:

config Already created `ESMF_Config` object.

[hconfig] Internally kept `ESMF_HConfig` object.

[rc] Return code; equals `ESMF_SUCCESS` if there are no errors.

48.3.10 ESMF_ConfigGetAttribute - Get an attribute value from Config object

INTERFACE:

```
        subroutine ESMF_ConfigGetAttribute(config, <value>, &
          label, default, rc)
```

ARGUMENTS:

```
        type(ESMF_Config), intent(inout)         :: config
        <value argument>, see below for supported values
 -- The following arguments require argument keyword syntax (e.g. rc=rc). --
        character(len=*),  intent(in),  optional :: label
        character(len=*),  intent(in),  optional :: default
        integer,           intent(out), optional :: rc
```

STATUS:

- This interface is backward compatible with ESMF versions starting at 5.2.0r. If code using this interface compiles with any version of ESMF starting with 5.2.0r, then it will compile with the current version.

DESCRIPTION:

Gets a value from the `config` object. When the value is a sequence of characters it will be terminated by the first white space.

Supported values for <value argument> are:

character(len=*), intent(out) :: value

real(ESMF_KIND_R4), intent(out) :: value

real(ESMF_KIND_R8), intent(out) :: value

integer(ESMF_KIND_I4), intent(out) :: value

integer(ESMF_KIND_I8), intent(out) :: value

logical, intent(out) :: value

The arguments are:

config Already created `ESMF_Config` object.

<value argument> Returned value.

[label] Identifing label.

[default] Default value if `label` is not found in `config` object.

[rc] Return code; equals `ESMF_SUCCESS` if there are no errors.

48.3.11 ESMF_ConfigGetAttribute - Get a list of attribute values from Config object

INTERFACE:

```
        subroutine ESMF_ConfigGetAttribute(config, <value list argument>, &
          count, label, default, rc)
```

ARGUMENTS:

```
        type(ESMF_Config), intent(inout)         :: config
        <value list argument>, see below for values
 -- The following arguments require argument keyword syntax (e.g. rc=rc). --
        integer,           intent(in)   optional :: count
        character(len=*),  intent(in),  optional :: label
        character(len=*),  intent(in),  optional :: default
        integer,           intent(out), optional :: rc
```

STATUS:

- This interface is backward compatible with ESMF versions starting at 5.2.0r. If code using this interface compiles with any version of ESMF starting with 5.2.0r, then it will compile with the current version.

DESCRIPTION:

Gets a list of values from the `config` object.

Supported values for <value list argument> are:

character(len=*), intent(out) :: valueList(:)

real(ESMF_KIND_R4), intent(inout) :: valueList(:)

real(ESMF_KIND_R8), intent(inout) :: valueList(:)

integer(ESMF_KIND_I4), intent(inout) :: valueList(:)

integer(ESMF_KIND_I8), intent(inout) :: valueList(:)

logical, intent(inout) :: valueList(:)

The arguments are:

config Already created `ESMF_Config` object.

<value list argument> Returned value.

count Number of returned values expected.

[label] Identifing label.

[default] Default value if `label` is not found in `config` object.

[rc] Return code; equals `ESMF_SUCCESS` if there are no errors.

48.3.12 ESMF_ConfigGetChar - Get a character attribute value from Config object

INTERFACE:

```
      subroutine ESMF_ConfigGetChar(config, value, &
        label, default, rc)
```

ARGUMENTS:

```
      type(ESMF_Config), intent(inout)         :: config
      character,         intent(out)           :: value
 -- The following arguments require argument keyword syntax (e.g. rc=rc). --
      character(len=*),  intent(in),  optional :: label
      character,         intent(in),  optional :: default
      integer,           intent(out), optional :: rc
```

STATUS:

- This interface is backward compatible with ESMF versions starting at 5.2.0r. If code using this interface compiles with any version of ESMF starting with 5.2.0r, then it will compile with the current version.

DESCRIPTION:

Gets a character `value` from the `config` object.

The arguments are:

config Already created `ESMF_Config` object.

value Returned value.

[label] Identifying label.

[default] Default value if label is not found in configuration object.

[rc] Return code; equals `ESMF_SUCCESS` if there are no errors.

48.3.13 ESMF_ConfigGetDim - Get table sizes from Config object

INTERFACE:

```
subroutine ESMF_ConfigGetDim(config, lineCount, columnCount, &
  label, rc)
```

ARGUMENTS:

```
  type(ESMF_Config), intent(inout)         :: config
  integer,           intent(out)           :: lineCount
  integer,           intent(out)           :: columnCount
-- The following arguments require argument keyword syntax (e.g. rc=rc). --
  character(len=*),  intent(in),  optional :: label
  integer,           intent(out), optional :: rc
```

STATUS:

- This interface is backward compatible with ESMF versions starting at 5.2.0r. If code using this interface compiles with any version of ESMF starting with 5.2.0r, then it will compile with the current version.

DESCRIPTION:

Returns the number of lines in the table in `lineCount` and the maximum number of words in a table line in `columnCount`.

After the call, the line pointer is positioned to the end of the table. To reset it to the beginning of the table, use `ESMF_ConfigFindLabel`.

The arguments are:

config Already created `ESMF_Config` object.

lineCount Returned number of lines in the table.

columnCount Returned maximum number of words in a table line.

[label] Identifying label (if present), otherwise current line.

[rc] Return code; equals `ESMF_SUCCESS` if there are no errors.

48.3.14 ESMF_ConfigGetLen - Get the length of the line in words from Config object

INTERFACE:

```
integer function ESMF_ConfigGetLen(config, label, rc)
```

ARGUMENTS:

```
      type(ESMF_Config), intent(inout)          :: config
 -- The following arguments require argument keyword syntax (e.g. rc=rc). --
      character(len=*),  intent(in),   optional :: label
      integer,           intent(out),  optional :: rc
```

STATUS:

- This interface is backward compatible with ESMF versions starting at 5.2.0r. If code using this interface compiles with any version of ESMF starting with 5.2.0r, then it will compile with the current version.

DESCRIPTION:

Gets the length of the line in words by counting words disregarding types. Returns the word count as an integer.

The arguments are:

config Already created `ESMF_Config` object.

[label] Identifying label. If not specified, use the current line.

[rc] Return code; equals `ESMF_SUCCESS` if there are no errors.

48.3.15 ESMF_ConfigIsCreated - Check whether a Config object has been created

INTERFACE:

```
function ESMF_ConfigIsCreated(config, rc)
```

RETURN VALUE:

```
     logical :: ESMF_ConfigIsCreated
```

ARGUMENTS:

```
     type(ESMF_Config), intent(in)            :: config
 -- The following arguments require argument keyword syntax (e.g. rc=rc). --
     integer,           intent(out), optional :: rc
```

DESCRIPTION:

Return `.true.` if the `config` has been created. Otherwise return `.false.`. If an error occurs, i.e. `rc /= ESMF_SUCCESS` is returned, the return value of the function will also be `.false.`.

The arguments are:

config `ESMF_Config` queried.

[rc] Return code; equals `ESMF_SUCCESS` if there are no errors.

48.3.16 ESMF_ConfigLoadFile - Load resource file into Config object memory

INTERFACE:

```
subroutine ESMF_ConfigLoadFile(config, filename, &
  delayout, & ! DEPRECATED ARGUMENT
  unique, rc)
```

ARGUMENTS:

```
  type(ESMF_Config),   intent(inout)         :: config
  character(len=*),    intent(in)            :: filename
-- The following arguments require argument keyword syntax (e.g. rc=rc). --
  type(ESMF_DELayout), intent(in),  optional :: delayout  ! DEPRECATED ARGUMENT
  logical,             intent(in),  optional :: unique
  integer,             intent(out), optional :: rc
```

STATUS:

- This interface is backward compatible with ESMF versions starting at 5.2.0r. If code using this interface compiles with any version of ESMF starting with 5.2.0r, then it will compile with the current version.
- This interface was modified since ESMF version 5.2.0r. The fact that code using this interface compiles with the current ESMF version does not guarantee that it compiles with previous versions of this interface. If user code compatibility with version 5.2.0r is desired then care must be taken to limit the use of this interface to features that were available in the 5.2.0r release.
  Changes made after the 5.2.0r release:

  8.5.0 Added support for loading basic YAML files.
  Marked argument `delayout` as deprecated. This argument was never used internally, and it is unclear what the original intention was.

DESCRIPTION:

The resource file named `filename` is loaded into memory. Both the classic Config file format, described in this document, and the YAML file format are supported. YAML support is limited to a small subset of the full YAML language specification, allowing access through the classic Config API. Specifically, in YAML mode, the top level is expected to be a mapping (dictionary) of scalar keys to the following value options:

- Scalars
- List of scalars
- List of lists of scalars

All other YAML constructs are silently ignored when loaded through this interface. Constructs successfully ingested become available in the `config` object, and can be accessed via the regular `ESMF_Config` methods.

The arguments are:

config Already created `ESMF_Config` object.

filename Name of the configuration file. Files ending in `.yaml`, `.yml`, or any combination of upper and lower case letters that can be mapped to these two options, are interpreted as YAML files. All other names are interpreted as classic Config files.

[delayout] ! DEPRECATED ARGUMENT `ESMF_DELayout` associated with this `config` object. This argument is not currently used.

[unique] If specified as true, uniqueness of labels are checked and error code set if duplicates found.

[rc] Return code; equals `ESMF_SUCCESS` if there are no errors.

48.3.17 ESMF_ConfigLog - Write content of Config object to log

INTERFACE:

```
subroutine ESMF_ConfigLog(config, raw, prefix, logMsgFlag, &
  log, rc)
```

ARGUMENTS:

```
  type(ESMF_Config),      intent(in)              :: config
-- The following arguments require argument keyword syntax (e.g. rc=rc). --
  logical,                intent(in),    optional :: raw
  character (len=*),      intent(in),    optional :: prefix
  type(ESMF_LogMsg_Flag), intent(in),    optional :: logMsgFlag
  type(ESMF_Log),         intent(inout), optional :: log
  integer,                intent(out),   optional :: rc
```

DESCRIPTION:

Write content of `ESMF_Config` object to ESMF log.

The arguments are:

config The `ESMF_Config` object to be logged.

[raw] For `.true.` output the internal buffer as is, for `.false.` output in the interpreted format. The default is `.false.`.

[prefix] String to prefix the memory info message. Default is no prefix.

[logMsgFlag] Type of log message generated. See section 50.2.3 for a list of valid message types. Default is `ESMF_LOGMSG_INFO`.

[log] `ESMF_Log` object that can be used instead of the default Log. Default is to use the default log.

[rc] Return code; equals `ESMF_SUCCESS` if there are no errors.

48.3.18 ESMF_ConfigNextLine - Find next line in a Config object

INTERFACE:

```
subroutine ESMF_ConfigNextLine(config, tableEnd, rc)
```

ARGUMENTS:

```
      type(ESMF_Config), intent(inout)          :: config
 -- The following arguments require argument keyword syntax (e.g. rc=rc). --
      logical,           intent(out),  optional :: tableEnd
      integer,           intent(out),  optional :: rc
```

STATUS:

- This interface is backward compatible with ESMF versions starting at 5.2.0r. If code using this interface compiles with any version of ESMF starting with 5.2.0r, then it will compile with the current version.

DESCRIPTION:

Selects the next line (for tables).

The arguments are:

config Already created `ESMF_Config` object.

[tableEnd] Returns `.true.` if end of table mark (::) is encountered.

[rc] Return code; equals `ESMF_SUCCESS` if there are no errors.

48.3.19 ESMF_ConfigPrint - Write content of Config object to unit

INTERFACE:

```
subroutine ESMF_ConfigPrint(config, unit, rc)
```

ARGUMENTS:

```
      type(ESMF_Config), intent(in)  :: config
 -- The following arguments require argument keyword syntax (e.g. rc=rc). --
      integer, optional, intent(in)  :: unit
      integer, optional, intent(out) :: rc
```

DESCRIPTION:

Write content of input `ESMF_Config` object to unit `unit`. If `unit` not provided, writes to standard output.

The arguments are:

config The input `ESMF_Config` object.

[unit] Output unit. Defaults to `stdout`.

[rc] Return code; equals `ESMF_SUCCESS` if there are no errors.

48.3.20 ESMF_ConfigSetAttribute - Set a value in Config object

INTERFACE:

```
      subroutine ESMF_ConfigSetAttribute(config, <value argument>, &
        label, rc)
```

ARGUMENTS:

```
      type(ESMF_Config), intent(inout)           :: config
      <value argument>, see below for supported values
 -- The following arguments require argument keyword syntax (e.g. rc=rc). --
      character(len=*),  intent(in),   optional  :: label
      integer,           intent(out),  optional  :: rc
```

STATUS:

- This interface is backward compatible with ESMF versions starting at 5.2.0r. If code using this interface compiles with any version of ESMF starting with 5.2.0r, then it will compile with the current version.

DESCRIPTION:

Sets a value in the `config` object.

Supported values for <value argument> are:

character(len=*), intent(in) :: value

integer(ESMF_KIND_I4), intent(in) :: value

The arguments are:

config Already created `ESMF_Config` object.

<value argument> Value to set.

[label] Identifying attribute label.

[rc] Return code; equals `ESMF_SUCCESS` if there are no errors.

48.3.21 ESMF_ConfigValidate - Validate a Config object

INTERFACE:

```
subroutine ESMF_ConfigValidate(config, &
  options, rc)
```

ARGUMENTS:

```
  type(ESMF_Config), intent(inout)          :: config
-- The following arguments require argument keyword syntax (e.g. rc=rc). --
  character (len=*), intent(in),   optional :: options
  integer,           intent(out),  optional :: rc
```

STATUS:

- This interface is backward compatible with ESMF versions starting at 5.2.0r. If code using this interface compiles with any version of ESMF starting with 5.2.0r, then it will compile with the current version.

DESCRIPTION:

Checks whether a `config` object is valid.

The arguments are:

config `ESMF_Config` object to be validated.

[options] If none specified: simply check that the buffer is not full and the pointers are within range. "unusedAttributes" - Report to the default logfile all attributes not retrieved via a call to `ESMF_ConfigGetAttribute()` or `ESMF_ConfigGetChar()`. The attribute name (label) will be logged via `ESMF_LogErr` with the WARNING log message type. For an array-valued attribute, retrieving at least one value via `ESMF_ConfigGetAttribute()` or `ESMF_ConfigGetChar()` constitutes being "used."

[rc] Return code; equals `ESMF_SUCCESS` if there are no errors. Equals `ESMF_RC_ATTR_UNUSED` if any unused attributes are found with option "unusedAttributes" above.

49 HConfig Class

49.1 Description

The ESMF HConfig class implements a hierarchical configuration facility that is compatible with YAML Ain't Markup Language (YAML^{TM}). ESMF HConfig can be understood as a Fortran interface to YAML. However, no claim is made that *all* YAML language features are supported in their entirety.

The purpose of the HConfig class under ESMF is to provide a migration path toward more standard configuration management for ESMF applications. To this end ESMF_HConfig integrates with the traditional ESMF_Config class. Through this integration the traditional Config class API offers basic access to YAML configuration files, in addition to providing backward compatible support of the traditional config file format. This is discussed in more detail in the Config class section. For more complete YAML support, applications are encouraged to migrate to the HConfig API discussed in this section.

49.2 Constants

49.2.1 ESMF_HCONFIGMATCH

DESCRIPTION:
Indicates the level to which two HConfig variables match.

The type of this flag is:

`type(ESMF_HConfigMatch_Flag)`

The valid values in ascending order are:

ESMF_HCONFIGMATCH_INVALID: Indicates a non-valid matching level. One or both HConfig objects are invalid.

ESMF_HCONFIGMATCH_NONE: The lowest valid level of HConfig matching. This indicates that the HConfig objects are valid, but their YAML representation does not match.

ESMF_HCONFIGMATCH_EXACT: There is an exact match between the YAML representation of both HConfig objects. They may or may not be aliases to the same object in memory.

ESMF_HCONFIGMATCH_ALIAS: Both HConfig variables are aliases to the exact same HConfig object in memory.

49.3 Use and Examples

The following examples demonstrate how a user typically interacts with the HConfig API. The HConfig class introduces two derived types:

- `ESMF_HConfig`
- `ESMF_HConfigIter`

`ESMF_HConfig` objects can be created explicitly by the user, or they can be accessed from an existing `ESMF_Config` object, e.g. queried from a Component. They can play a number of roles when interacting with a HConfig hierarchy:

1. The root node of the entire hierarchy. In YAML terminology, this refers to a *document*.
2. *Any* node within the hierarchy.
3. Collection of hierarchies, i.e. a set of YAML *documents*.

`ESMF_HConfigIter` objects are iterators, *referencing* a specific node within the hierarchy. They are created from `ESMF_HConfig` objects. The iterator approach allows convenient sequential traversal of a particular location in the HConfig hierarchy. There are *two* flavors of iterators in HConfig: *sequence* and *map* iterators. Both are represented by the same `ESMF_HConfigIter` derived type, and the distinction is made at run-time.

Notice that there are redundancies built into the HConfig API, where different ways are available to achieve the same goal. This is mostly done for convenience, allowing the user to pick the approach most suitable to their needs.

For instance, while it can be convenient to use iterators in some cases, in others, it might be more appropriate to access elements directly by *index* (for sequences) or *key* (for maps). Both options are available.

49.3.1 Create an empty HConfig object

By default, `ESMF_HConfigCreate()` creates an empty HConfig object.

```
! type(ESMF_HConfig) :: hconfig
hconfig = ESMF_HConfigCreate(rc=rc)
```

49.3.2 Set HConfig from string using YAML syntax

An empty HConfig object can be set directly from a string using YAML syntax.

```
call ESMF_HConfigSet(hconfig, content="[1, 2, 3, abc, b, TRUE]", rc=rc)
```

This sets `hconfig` as a *sequence* of six scalar members.

49.3.3 Iterator based HConfig sequence parsing

One way to parse the elements contained in `hconfig` is to use the iterator pattern known from laguages such as C++ or Python. HConfig iterators are implemented as `type(ESMF_HConfigIter)` objects that are initialized using one of the `HConfigIter*()` methods. An iterator can then be used to traverse the elements in a *sequence* or *map* by calling the `ESMF_HConfigIterNext()` method, taking one step forward each time the method is called.

Being a HConfig object, an iterator can be passed into any of the usual HConfig methods. The operation is applied to the element that the iterator is currently referencing.

Notice that iterators are merely references, not associated with their own deep allocation. This is reflected in the fact that iterators are *not* created by an assignment that has a `Create()` call on the right hand side. As such, HConfig iterators need *not* be destroyed explicitly when done.

Two special HConfig iterators are defined, referencing the beginning and the end of a HConfig sequence or map object.

```
! type(ESMF_HConfigIter) :: hconfigIterBegin, hconfigIterEnd
hconfigIterBegin = ESMF_HConfigIterBegin(hconfig, rc=rc)

hconfigIterEnd = ESMF_HConfigIterEnd(hconfig, rc=rc)
```

In analogy to the C++ iterator pattern, `hconfigIterBegin` points to the first element in `hconfig`, while `hconfigIterEnd` points one step beyond the last element. Using these elements together, an iterator loop can be written in the following intuitive way, using `hconfigIter` as the loop variable.

```
! type(ESMF_HConfigIter) :: hconfigIter
hconfigIter = hconfigIterBegin
do while (hconfigIter /= hconfigIterEnd)

  ! Code here that uses hconfigIter
  ! to access the currently referenced
  ! element in hconfig.  .......

  call ESMF_HConfigIterNext(hconfigIter, rc=rc)

enddo
```

One *major* concern with the above iterator loop implementation is when Fortran `cycle` statements are introduced. In order to make the above loop `cycle`–safe, each such `cycle` statement needs to be matched with its own call to `ESMF_HConfigIterNext()`. This needs to be done to prevent endless-loop conditions, where the exit condition of the `do while` is never reached.

The `cycle`–safe alternative implementation of the iterator loop leverages the `ESMF_HConfigIterLoop()` function instead of `ESMF_HConfigIterNext()`. This approach is more akin to the C++

```
for (element : container){
  ...
}
```

or the Python

```
for element in container:
  ...
```

approach. It is the preferable way to write HConfig iterator loops due to its simplicity and inherent `cycle`–safety.

The `ESMF_HConfigIterLoop()` function takes three required arguments. The first is the loop iterator, followed by the begin and end iterators. The loop iterator must enter equal to the begin iterator at the start of the loop. Each time the `ESMF_HConfigIterLoop()` function is called, the loop iterator is stepped forward as appropriate, and the exit condition of having reached the end iterator is checked. Having both the stepping and exit logic in one place provided by the HConfig API simplifies the usage. In addition, the approach is `cycle`–safe: no matter where a `cycle` statement is inserted in the loop body, it always brings the execution back to the top of the while loop, which in turn calls the `ESMF_HConfigIterLoop()` function.

```
! type(ESMF_HConfigIter) :: hconfigIter
hconfigIter = hconfigIterBegin
do while (ESMF_HConfigIterLoop(hconfigIter, hconfigIterBegin, hconfigIterEnd, rc=rc))

  ! Check whether the current element is a scalar.
  ! logical :: isScalar
  isScalar = ESMF_HConfigIsScalar(hconfigIter, rc=rc)

  if (isScalar) then

    ! Any scalar can be accessed as a string.
    ! character(len=:), allocatable :: string
    string = ESMF_HConfigAsString(hconfigIter, rc=rc)

    ! The attempt can be made to interpret the scalar as any of the other
    ! supported data types. By default, if the scalar cannot be interpreted
    ! as the requested data type, rc /= ESMF_SUCCESS is returned. To prevent
    ! such error condition, the optional, intent(out) argument "asOkay" can
    ! be provided. If asOkay == .true. is returned, the interpretation was
    ! successful. Otherwise asOkay == .false. is returned.

    ! logical :: asOkay

    ! integer(ESMF_KIND_I4) :: valueI4
    valueI4 = ESMF_HConfigAsI4(hconfigIter, asOkay=asOkay, rc=rc)
```

```
      ! integer(ESMF_KIND_I8) :: valueI8
      valueI8 = ESMF_HConfigAsI8(hconfigIter, asOkay=asOkay, rc=rc)

      ! real(ESMF_KIND_R4) :: valueR4
      valueR4 = ESMF_HConfigAsR4(hconfigIter, asOkay=asOkay, rc=rc)

      ! real(ESMF_KIND_R8) :: valueR8
      valueR8 = ESMF_HConfigAsR8(hconfigIter, asOkay=asOkay, rc=rc)

      ! logical :: valueL
      valueL = ESMF_HConfigAsLogical(hconfigIter, asOkay=asOkay, rc=rc)

    else
      ! Possible recursive iteration over the current hconfigIter element.
    endif

  enddo
```

49.3.4 Index based random access HConfig sequence parsing

An alternative way to loop over the elements contained in `hconfig`, and parsing them, is to use an `index` variable. For this approach the size of `hconfig` is queried.

```
  ! integer :: size
  size = ESMF_HConfigGetSize(hconfig, rc=rc)
```

Then looping over the elements is done with a simple do loop. Index based access allows random order of access, versus the iterator approach that only supports begin to end iteration. This is demonstrated here by writing the do loop in reverse order.

```
  ! integer :: i
  do i=size, 1, -1

    ! Check whether the current element is a scalar.
    ! logical :: isScalar
    isScalar = ESMF_HConfigIsScalar(hconfig, index=i, rc=rc)

    if (isScalar) then

      ! Any scalar can be accessed as a string.
      ! character(len=:), allocatable :: string
      string = ESMF_HConfigAsString(hconfig, index=i, rc=rc)

      ! The attempt can be made to interpret the scalar as any of the other
      ! supported data types. By default, if the scalar cannot be interpreted
      ! as the requested data type, rc /= ESMF_SUCCESS is returned. To prevent
      ! such error condition, the optional, intent(out) argument "asOkay" can
      ! be provided. If asOkay == .true. is returned, the interpretation was
      ! successful. Otherwise asOkay == .false. is returned.
      ! logical :: asOkay

      ! integer(ESMF_KIND_I4) :: valueI4
      valueI4 = ESMF_HConfigAsI4(hconfig, index=i, asOkay=asOkay, rc=rc)
```

```
      ! integer(ESMF_KIND_I8) :: valueI8
      valueI8 = ESMF_HConfigAsI8(hconfig, index=i, asOkay=asOkay, rc=rc)

      ! real(ESMF_KIND_R4) :: valueR4
      valueR4 = ESMF_HConfigAsR4(hconfig, index=i, asOkay=asOkay, rc=rc)

      ! real(ESMF_KIND_R8) :: valueR8
      valueR8 = ESMF_HConfigAsR8(hconfig, index=i, asOkay=asOkay, rc=rc)

      ! logical :: valueL
      valueL = ESMF_HConfigAsLogical(hconfig, index=i, asOkay=asOkay, rc=rc)

    else
      ! Possible recursive iteration over the current index=i element.
    endif
  enddo
```

The above loop is safe with respect to `index` potentially being specified with an out-of-range value. This is because `ESMF_HConfigIsScalar()` returns `.false.` in this case. There are only four valid options of what `type` a valid HConfig element can be. Each has an associated `Is` method:

- Null: `ESMF_HConfigIsNull()`
- Scalar: `ESMF_HConfigIsScalar()`
- Sequence: `ESMF_HConfigIsSequence()`
- Map: `ESMF_HConfigIsMap()`

The general check to see whether an index points to a valid element is provided by `ESMF_HConfigIsDefined()`.

```
  ! logical :: isDefined
  isDefined = ESMF_HConfigIsDefined(hconfig, index=10, rc=rc)
```

This returns `isDefined == .false.` because for `hconfig` a value of `index=10` is out of range.

49.3.5 Destroy a HConfig object

When done with `hconfig`, it should be destroyed in the usual manner.

```
  call ESMF_HConfigDestroy(hconfig, rc=rc)
```

49.3.6 Create a HConfig object directly loading from YAML string

The `ESMF_HConfigCreate()` method supports loading contents from string using YAML syntax directly via the optional `content` argument.

```
  ! type(ESMF_HConfig) :: hconfig
  hconfig = ESMF_HConfigCreate(content="{car: red, bike: 22, plane: TRUE}", rc=rc)
```

Here a map is created. In this case, all of the keys are scalars (car, bike, plane), as are all of the associated values (red, 22, TRUE).

49.3.7 Iterator based HConfig map parsing

The elements of the *map* contained in `hconfig` can be iterated over analogous to the *sequence* case demonstrated earlier. Again the begin and end iterator variables are defined.

```
! type(ESMF_HConfigIter) :: hconfigIterBegin, hconfigIterEnd
hconfigIterBegin = ESMF_HConfigIterBegin(hconfig, rc=rc)

hconfigIterEnd = ESMF_HConfigIterEnd(hconfig, rc=rc)
```

Then iterate over the elements in `hconfig` using an iterator loop variable as before.

The difference of the code below, compared to the *sequence* case, is that all the `As` access methods here are either of the form `As*MapKey` or `As*MapVal`. This is necessary to selectively access the *map key* or *map value*, respectively.

```
! type(ESMF_HConfigIter) :: hconfigIter
hconfigIter = hconfigIterBegin
do while (ESMF_HConfigIterLoop(hconfigIter, hconfigIterBegin, hconfigIterEnd, rc=rc))

  ! Check whether the current element is a scalar both for the map key
  ! and the map value.
  ! logical :: isScalar
  isScalar = ESMF_HConfigIsScalarMapKey(hconfigIter, rc=rc)

  isScalar = isScalar .and. ESMF_HConfigIsScalarMapVal(hconfigIter, rc=rc)

  if (isScalar) then

    ! Any scalar can be accessed as a string. Use this for the map key.
    ! character(len=:), allocatable :: stringKey
    stringKey = ESMF_HConfigAsStringMapKey(hconfigIter, rc=rc)

    ! Now access the map value. Again first access as a string, which
    ! always works.
    ! character(len=:), allocatable :: string
    string = ESMF_HConfigAsStringMapVal(hconfigIter, rc=rc)

    ! The attempt can be made to interpret the scalar as any of the other
    ! supported data types. By default, if the scalar cannot be interpreted
    ! as the requested data type, rc /= ESMF_SUCCESS is returned. To prevent
    ! such error condition, the optional, intent(out) argument "asOkay" can
    ! be provided. If asOkay == .true. is returned, the interpretation was
    ! successful. Otherwise asOkay == .false. is returned.
    ! logical :: asOkay

    ! integer(ESMF_KIND_I4) :: valueI4
    valueI4 = ESMF_HConfigAsI4MapVal(hconfigIter, asOkay=asOkay, rc=rc)

    ! integer(ESMF_KIND_I8) :: valueI8
    valueI8 = ESMF_HConfigAsI8MapVal(hconfigIter, asOkay=asOkay, rc=rc)
```

```
    ! real(ESMF_KIND_R4) :: valueR4
    valueR4 = ESMF_HConfigAsR4MapVal(hconfigIter, asOkay=asOkay, rc=rc)

    ! real(ESMF_KIND_R8) :: valueR8
    valueR8 = ESMF_HConfigAsR8MapVal(hconfigIter, asOkay=asOkay, rc=rc)

    ! logical :: valueL
    valueL = ESMF_HConfigAsLogicalMapVal(hconfigIter, asOkay=asOkay, rc=rc)

  else
    ! Deal with case where either key or value are not scalars themselves.
  endif

enddo
```

49.3.8 Key based random access HConfig map parsing

The *map values* stored in `hconfig` can be accessed in random order providing the *map key*.

To demonstrate this, a temporary array holding keys in random order is defined.

```
! character(5) :: keyList(3)
keyList = ["bike ", "plane", "car  "]
```

Then loop over the elements of `keyList` and use them as *map key* to access the *map values* in `hconfig`.

```
! integer :: i
do i=1,3

  ! Ensure that all white space padding is removed.
  ! character :: stringKey
  stringKey = trim(keyList(i))

  ! Check whether the accessed map value is a scalar.
  ! logical :: isScalar
  isScalar = ESMF_HConfigIsScalar(hconfig, keyString=stringKey, rc=rc)

  if (isScalar) then

    ! Access as a string always works.
    ! character(len=:), allocatable :: string
    string = ESMF_HConfigAsString(hconfig, keyString=stringKey, rc=rc)

    ! The attempt can be made to interpret the scalar as any of the other
    ! supported data types. By default, if the scalar cannot be interpreted
    ! as the requested data type, rc /= ESMF_SUCCESS is returned. To prevent
    ! such error condition, the optional, intent(out) argument "asOkay" can
    ! be provided. If asOkay == .true. is returned, the interpretation was
    ! successful. Otherwise asOkay == .false. is returned.
    ! logical :: asOkay

    ! integer(ESMF_KIND_I4) :: valueI4
    valueI4 = ESMF_HConfigAsI4(hconfig, keyString=stringKey, asOkay=asOkay, rc=rc)
```

```
      ! integer(ESMF_KIND_I8) :: valueI8
      valueI8 = ESMF_HConfigAsI8(hconfig, keyString=stringKey, asOkay=asOkay, rc=rc)

      ! real(ESMF_KIND_R4) :: valueR4
      valueR4 = ESMF_HConfigAsR4(hconfig, keyString=stringKey, asOkay=asOkay, rc=rc)

      ! real(ESMF_KIND_R8) :: valueR8
      valueR8 = ESMF_HConfigAsR8(hconfig, keyString=stringKey, asOkay=asOkay, rc=rc)

      ! logical :: valueL
      valueL = ESMF_HConfigAsLogical(hconfig, keyString=stringKey, asOkay=asOkay, rc=rc)

    else
      ! Deal with case where either key or value are not scalars themselves.
    endif

  enddo
```

The above loop is safe with respect to `stringKey` potentially specifying a value that is not a valid *map key*. This is because `ESMF_HConfigIsScalar()` returns `.false.` in this case.

The general check to see whether a *map key* refers to a valid element is provided by `ESMF_HConfigIsDefined()`.

```
  ! logical :: isDefined
  isDefined = ESMF_HConfigIsDefined(hconfig, keyString="bad-key", rc=rc)
```

This returns `isDefined == .false.` because `hconfig` does not contain `"bad-key"` as one of its valid *map keys*.

Finally destroy `hconfig` when done.

```
  call ESMF_HConfigDestroy(hconfig, rc=rc)
```

49.3.9 Access HConfig from Config

The `ESMF_Config` class can be queried for a HConfig object. This allows the use of the HConfig API to access information contained in a Config object.

```
  ! type(ESMF_Config) :: config
  ! type(ESMF_HConfig) :: hconfig
  call ESMF_ConfigGet(config, hconfig=hconfig, rc=rc)
```

The `hconfig` obtained this way is indistinguishable from an explicitly created HConfig instance. E.g. it can be queried for its *type* using the `Is` methods:

```
  ! logical :: isDefined
  isDefined = ESMF_HConfigIsDefined(hconfig, rc=rc)

  ! logical :: isNull
  isNull = ESMF_HConfigIsNull(hconfig, rc=rc)
```

```
! logical :: isSequence
isSequence = ESMF_HConfigIsSequence(hconfig, rc=rc)

! logical :: isMap
isMap = ESMF_HConfigIsMap(hconfig, rc=rc)
```

Once done with `hconfig` it must *not* be destroyed explicitly by the user. The `hconfig` is still owned by the `config` object, and will be destroyed automatically when the `config` object is destroyed. This follows the simple rule that a user only owns those objects created explicitly by calling a `Create()` method.

49.3.10 Load HConfig from YAML file

One option to load a YAML file is to first create an empty HConfig object, followed by calling `ESMF_HConfigFileLoad()`.

```
! type(ESMF_HConfig) :: hconfig
hconfig = ESMF_HConfigCreate(rc=rc)

call ESMF_HConfigFileLoad(hconfig, filename="example.yaml", rc=rc)

! When done destroy as usual.
call ESMF_HConfigDestroy(hconfig, rc=rc)
```

The alternative option is to create and load the HConfig object in a single call to `ESMF_HConfigCreate()` using the optional `filename` argument to specify the YAML file.

```
! type(ESMF_HConfig) :: hconfig
hconfig = ESMF_HConfigCreate(filename="example.yaml", rc=rc)

! And again destroy hconfig when done with it.
call ESMF_HConfigDestroy(hconfig, rc=rc)
```

49.3.11 Save HConfig to YAML file

A HConfig object can be saved to a YAML file by calling the `ESMF_HConfigFileSave()` method. To demonstrate this, a YAML file containing:

```
# An example of YAML configuration file

simple_list: [1, 2, 3, abc, b, TRUE]
simple_map:
  car: red
  [bike, {p1: 10, p2: 20}]: [bmx, mountain, street]
  plane: [TRUE, FALSE]
```

is loaded to create the `hconfig` object:

```
hconfig = ESMF_HConfigCreate(filename="example.yaml", rc=rc)
```

Now the `hconfig` object can be saved to file using the `ESMF_HConfigFileSave()` method.

```
call ESMF_HConfigFileSave(hconfig, filename="saveMe.yml", rc=rc)
```

Notice that the resulting contents of file `saveMe.yml` does *not* contain the comments of the original file. The YAML structure is saved.

```
 simple_list: [1, 2, 3, abc, b, TRUE]
 simple_map:
   car: red
   [bike, {p1: 10, p2: 20}]: [bmx, mountain, street]
   plane: [TRUE, FALSE]
```

The object specified in `ESMF_HConfigFileSave()` can be a regular node (of any type) or a *sequence* iterator. In either case the file written represents the YAML hierarchy with the specified object as the root node.

In the case of a *map* iterator, it is necessary to first create an appropriate root node utilizing the appropriate `CreateAt` method. This allows saving either the *map key* or *map value* node at the current iterator. This is demonstrated below.

In the current example, where `hconfig` is a map with two elements, a map iterator can be set to the beginning using the following call.

```
! type(ESMF_HConfigIter) :: hconfigIter
hconfigIter = ESMF_HConfigIterBegin(hconfig, rc=rc)
```

Here `hconfigIter` cannot be saved to file directly. To write the *key* node, first create a HConfig object for it using method `ESMF_HConfigCreateAtMapKey()`.

```
! type(ESMF_HConfig) :: hconfigTemp
hconfigTemp = ESMF_HConfigCreateAtMapKey(hconfigIter, rc=rc)
```

Then save it.

```
call ESMF_HConfigFileSave(hconfigTemp, filename="mapKeyBegin.yaml", rc=rc)
```

And finally destroy `hconfigTemp` again.

```
call ESMF_HConfigDestroy(hconfigTemp, rc=rc)
```

Similarly, to write the *value* node to file, first create a HConfig object for it using method `ESMF_HConfigCreateAtMapVal()`.

```
! type(ESMF_HConfig) :: hconfigTemp
hconfigTemp = ESMF_HConfigCreateAtMapVal(hconfigIter, rc=rc)
```

Then save it.

```
call ESMF_HConfigFileSave(hconfigTemp, filename="mapValBegin.yaml", rc=rc)
```

And destroy it.

```
call ESMF_HConfigDestroy(hconfigTemp, rc=rc)
```

Since `hconfig` is a *map* node, it is also possible to directly create a *value* node by calling `ESMF_HConfigCreateAt()` on it, using the desired *key*.

```
! type(ESMF_HConfig) :: hconfigTemp
hconfigTemp = ESMF_HConfigCreateAt(hconfig, keyString="simple_map", rc=rc)
```

Now `hconfigTemp` points to the *value* node, that is associated with the "simple_map" key, which is in turn a map:

```
 car: red
 [bike, {p1: 10, p2: 20}]: [bmx, mountain, street]
 plane: [TRUE, FALSE]
```

It can be saved to file as usual.

```
call ESMF_HConfigFileSave(hconfigTemp, filename="mapValAtKey.yaml", rc=rc)
```

Any of the *value* nodes of `hconfigTemp` can be accessed through recursive usage of the `ESMF_HConfigCreateAt()` method. For example, the following call accesses the *value* node that is associated with `keyString="[bike, p1:  10, p2:  20]"`. Here the `keyString` is interpreted as YAML syntax, for which an internal HConfig representation is created, and finally the map held by `hconfigTemp` is searched for a matching key.

```
! type(ESMF_HConfig) :: hconfigTemp2
hconfigTemp2 = ESMF_HConfigCreateAt(hconfigTemp, &
  keyString="[bike, {p1: 10, p2: 20}]", rc=rc)
```

Now `hconfigTemp2` points to the *sequence node* with contents `[bmx, mountain, street]`. It, too, can be saved to file.

```
call ESMF_HConfigFileSave(hconfigTemp2, filename="mapValRecursive.yaml", rc=rc)
```

Finally `hconfigTemp2`, `hconfigTemp` and `hconfig` should be destroyed.

```
call ESMF_HConfigDestroy(hconfigTemp2, rc=rc)

call ESMF_HConfigDestroy(hconfigTemp, rc=rc)

call ESMF_HConfigDestroy(hconfig, rc=rc)
```

49.3.12 Tags and Schemas

The HConfig class implements tags to identify a node's data type according to the YAML standard. The combination of a set of defined tags and a mechanism to resolve non-specific tags is called a schema under YAML. The HConfig class implements the YAML Core schema, which is an extension of the JSON schema.

This example starts with an empty HConfig object.

```
! type(ESMF_HConfig) :: hconfig
hconfig = ESMF_HConfigCreate(rc=rc)
```

Method `ESMF_HConfigGetTag()` is used to query the tag.

```
! character(len=:), allocatable :: tag
tag = ESMF_HConfigGetTag(hconfig, rc=rc)
```

Null The `hconfig` is an empty object, in other words it is associated with NULL. The Core schema tag for this situation is **tag:yaml.org,2002:null**.

Next, file `exampleWithTags.yaml` is loaded.

```
call ESMF_HConfigFileLoad(hconfig, filename="exampleWithTags.yaml", rc=rc)
```

The file contains the following YAML:

```
value_one:    {word1: this, word2: is, word3: a, word4: map}
value_two:    [this, is, a, list]
value_three:            123
value_four:   !!float   123
value_five:             2.5
value_six:    !!str     2.5
value_seven:            False
value_eight:  !!str     true
value_nine:             0x234
value_ten:              Null
value_eleven:
value_twelve:  !myStuff xyz
value_thirteen:         NO
value_fourteen:         "NO"
```

The value associated with *map key* "value_ten" is explicitly set to `Null`. The associated tag for this node can be obtained directly by supplying the `keyString` argument.

```
tag = ESMF_HConfigGetTag(hconfig, keyString="value_ten", rc=rc)
```

The resolved Core schema tag is again **tag:yaml.org,2002:null**. There are four special values that resolve to this tag: `null`, `Null`, `NULL`, and $\sim$. In addition to those special values, an *empty* value, as demonstrated by *key* "value_eleven", also automatically resolves to **tag:yaml.org,2002:null**.

```
tag = ESMF_HConfigGetTag(hconfig, keyString="value_eleven", rc=rc)
```

Map On the top level, after loading the YAML file, `hconfig` is a map. Querying again for the tag of `hconfig`,

```
tag = ESMF_HConfigGetTag(hconfig, rc=rc)
```

results in the Core schema tag of **tag:yaml.org,2002:map**.

Sequence The value associated with *map key* "value_two" in the current `hconfig` object is a sequence. The tag for this node can be obtained directly by supplying the `keyString` argument.

```
tag = ESMF_HConfigGetTag(hconfig, keyString="value_two", rc=rc)
```

The resolved Core schema tag for a sequence is **tag:yaml.org,2002:seq**.

String All of the *keys* of the currently loaded `hconfig` object are strings. To obtain the tag that is associated with the first key node, an iterator is used to access the map nodes individually.

```
! type(ESMF_HConfigIter) :: hconfigIter
hconfigIter = ESMF_HConfigIterBegin(hconfig, rc=rc)
```

Now the `ESMF_HConfigGetTagMapKey()` method can be used to obtain the tag for the first key node.

```
tag = ESMF_HConfigGetTagMapKey(hconfigIter, rc=rc)
```

Here the Core schema tag resolves to **tag:yaml.org,2002:str**.

Integer The value associated with *map key* "value_three" in the current `hconfig` object is an integer number. The tag for this node can be obtained as before by directly supplying the `keyString` argument.

```
tag = ESMF_HConfigGetTag(hconfig, keyString="value_three", rc=rc)
```

The Core schema tag resolves to **tag:yaml.org,2002:int**.

The value associated with *map key* "value_nine" in the current `hconfig` object is an integer number in hex. The tag for this node can be obtained as before by directly supplying the `keyString` argument.

```
tag = ESMF_HConfigGetTag(hconfig, keyString="value_nine", rc=rc)
```

The Core schema tag resolves to **tag:yaml.org,2002:int**.

Floating Point The value associated with *map key* "value_five" in the current `hconfig` object is a floating point number. The tag for this node can be obtained as before by directly supplying the `keyString` argument.

```
tag = ESMF_HConfigGetTag(hconfig, keyString="value_five", rc=rc)
```

The Core schema tag resolves to **tag:yaml.org,2002:float**.

Boolean The value associated with *map key* "value_seven" in the current `hconfig` object is a boolean. The tag for this node can be obtained as before by directly supplying the `keyString` argument.

```
tag = ESMF_HConfigGetTag(hconfig, keyString="value_seven", rc=rc)
```

The Core schema tag resolves to **tag:yaml.org,2002:bool**. The supported boolean values are:

```
true   |   false
True   |   False
TRUE   |   FALSE
```

Additional Boolean values and the "Norway problem" The YAMLCPP backend used by `ESMF_HConfig` interprets all of the values recognized as such under YAML 1.1 as boolean. This extends the above list with additional options:

```
yes    |   no
Yes    |   No
YES    |   NO
y      |   n
Y      |   N
on     |   off
On     |   Off
ON     |   OFF
```

The interpretation of value `NO` as a boolean, instead of a literal string, can be problematic. It leads to the so-called *"Norway problem"*, because the same string is often used as country code instead. The underlying problem is the misinterpretation of values by YAML.

Strictly speaking this is not a YAML problem, but instead a schema specific issue. Fortunately there are two simple solutions to ensure the correct and intended interpretation of values by `ESMF_HConfig`:

1. Explicit quotation of strings: See for instance the *map value* for `value_fourteen` in the current example. Using explicit quotes for `"NO"`, the entry is safely interpreted as a literal string, and if queried for its tag, will return `tag:yaml.org,2002:str`.
2. Explicit standard tags: This option allows explicit specificaiton of any tag, e.g. the standard short-hand tag `!str` for literal strings. This approach is discussed in more detal below.

Explicit standard tags Standard short-hand tags can be specified to change the default resolution. This is demonstrated for *map keys* "value_four", "value_six", and "value_eight".

```
tag = ESMF_HConfigGetTag(hconfig, keyString="value_four", rc=rc)

tag = ESMF_HConfigGetTag(hconfig, keyString="value_six", rc=rc)

tag = ESMF_HConfigGetTag(hconfig, keyString="value_eight", rc=rc)
```

The default resolution of these three keys would be `tag:yaml.org,2002:int`, `tag:yaml.org,2002:float`, and `tag:yaml.org,2002:bool`, respectively. However, with the explict tags in place, they are resolved to `tag:yaml.org,2002:float`, `tag:yaml.org,2002:str`, `tag:yaml.org,2002:str`, instead.

Explicit custom tags The HConfig class supports application-specific local tags as per the YAML standard. These are tags that are not known by the Core schema. If such a tag is encountered on a node, it is preserved and no further automatic tag resolution is performed.

The value associated with *map key* "value_twelve" in the current `hconfig` object has a custom tag. The tag for this node can be obtained as before by directly supplying the `keyString` argument.

```
tag = ESMF_HConfigGetTag(hconfig, keyString="value_twelve", rc=rc)
```

The returned tag is **!myStuff**.

Finally clean up `hconfig`.

```
! Destroy hconfig when done with it.
call ESMF_HConfigDestroy(hconfig, rc=rc)
```

49.3.13 Comparing HConfig objects

The HConfig class follows the standard behavior of ESMF deep classes as described in section 8.4. To demonstrate the operations of assignment, equality, and comparison based on content, we start by creating a simple HConfig object.

```
! type(ESMF_HConfig) :: hconfig
hconfig = ESMF_HConfigCreate(content="{car: red, bike: 22, plane: TRUE}", rc=rc)
```

A simple assignment results in an alias to the same deep HConfig object.

```
! type(ESMF_HConfig) :: hconfigTemp
hconfigTemp = hconfig
```

The equality `(==)` and inequality `(/=)` operators are overloaded to check for the alias condition when used between two HConfig objects.

```
! logical :: isAlias
isAlias = (hconfigTemp == hconfig)

! logical :: isNotAlias
isNotAlias = (hconfigTemp /= hconfig)
```

Alias equality can also be tested by using the `ESMF_HConfigMatch()` function. The return value of this function is of type `ESMF_HConfigMatch_Flag`, which allows for a wider range of possible comparison results. See section 49.2.1 for all the implemented return values.

```
! type(ESMF_HConfigMatch_Flag)  :: match
match = ESMF_HConfigMatch(hconfig, hconfigTemp, rc=rc)
```

For the case of an alias match, the value of `ESMF_HCONFIGMATCH_ALIAS` is returned.

```
isAlias = (match == ESMF_HCONFIGMATCH_ALIAS)
```

To demonstrate content matching for HConfig objects that are not aliases, we create a separate object with the same content as `hconfig`.

```
! type(ESMF_HConfig) :: hconfigTemp
hconfigTemp = ESMF_HConfigCreate(content="{car: red, bike: 22, plane: TRUE}", rc=rc)
```

The simple alias check now returns `.false.`.

```
! logical :: isAlias
isAlias = (hconfigTemp == hconfig)
```

However, for two separate HConfig objects that have exactly matching content, as is the case for `hconfig` and `hconfigTemp`, function `ESMF_HConfigMatch()` returns value `ESMF_HCONFIGMATCH_EXACT`.

```
! type(ESMF_HConfigMatch_Flag)  :: match
match = ESMF_HConfigMatch(hconfig, hconfigTemp, rc=rc)

! logical :: isExact
isExact = (match == ESMF_HCONFIGMATCH_EXACT)
```

The values returned by `ESMF_HConfigMatch()` are constructed in a monotonically increasing manner to simplify general comparisons that ensure two objects are either aliases of each other *or* their content matches exactly. This common case is demonstrated in the following code that sets `isMatch` to `.true.` for the alias or exact match condition, and `.false.` otherwise, using `(>=)` logic.

```
! logical :: isMatch
isMatch = (match >= ESMF_HCONFIGMATCH_EXACT)
```

While there is an exact match of the content of `hconfig` and `hconfigTemp`, they are distinct objects in memory, which can be modified independent of each other. E.g. another key-value pair can be added to `hconfigTemp` without affecting the content of `hconfig`.

```
call ESMF_HConfigAdd(hconfigTemp, addKeyString="kNew", content=7, rc=rc)
```

Now that the content of `hconfig` and `hconfigTemp` differs, function `ESMF_HConfigMatch()` returns value `ESMF_HCONFIGMATCH_NONE`.

```
! type(ESMF_HConfigMatch_Flag)  :: match
match = ESMF_HConfigMatch(hconfig, hconfigTemp, rc=rc)

! logical :: isNone
isNone = (match == ESMF_HCONFIGMATCH_NONE)
```

Finally clean up both HConfig objects.

```
! Destroy hconfig when done with it.
call ESMF_HConfigDestroy(hconfig, rc=rc)

! Destroy hconfigTemp when done with it.
call ESMF_HConfigDestroy(hconfigTemp, rc=rc)
```

49.3.14 Adding, Setting, and Removing elements from HConfig object

After creating a HConfig object without specifying `content` or `filename`, it is empty.

```
! type(ESMF_HConfig) :: hconfig
hconfig = ESMF_HConfigCreate(rc=rc)
```

Now the `ESMF_HConfigAdd()` method can be used to add new elements to an existing HConfig object. The `Add()` interfaces are heavily overloaded, each specific entry point featuring a number of optional arguments. The two fundamentally different ways of using `Add()` are: (1) adding an element at the end of a *sequence* or (2) adding an element to a *map*. Here, where `hconfig` is empty, either option is possible. The way the first element is added determines whether `hconfig` is a sequence or a map.

The following call adds an element to `hconfig` without specifying the `addKey` or `addKeyString` argument. This indicates that a sequence element is added to the end, and as a consequence rendering `hconfig` a *sequence*.

```
call ESMF_HConfigAdd(hconfig, "first added item", rc=rc)
```

Additional elements can be added at the end of `hconfig`.

```
call ESMF_HConfigAdd(hconfig, 12.57_ESMF_KIND_R8, rc=rc)
```

At this point, the content of `hconfig` is a sequence with two elements.

```
 - first added item
 - 12.5700000000
```

It is also possible to add an entire HConfig structure as an item to the existing sequence. One way to do this is to use standar YAML syntax when adding the element. Here a *map* is added to the end of `hconfig`.

```
call ESMF_HConfigAdd(hconfig, "{k1: 7, k2: 25}", rc=rc)
```

This results in the following content, where the third element of the sequence is the map that was just added.

```
 - first added item
 - 12.5700000000
 - {k1: 7, k2: 25}
```

A HConfig structure can even be loaded from file and added to the end of `hconfig`. This requires a temporary HConfig object.

```
! type(ESMF_HConfig) :: hconfigTemp
hconfigTemp = ESMF_HConfigCreate(filename="example.yaml", rc=rc)

call ESMF_HConfigAdd(hconfig, hconfigTemp, rc=rc)

call ESMF_HConfigDestroy(hconfigTemp, rc=rc)
```

The result is the following content for `hconfig`.

```
 - first added item
 - 12.5700000000
 - {k1: 7, k2: 25}
 - simple_list: [1, 2, 3, abc, b, TRUE]
   simple_map:
     car: red
     [bike, {p1: 10, p2: 20}]: [bmx, mountain, street]
     plane: [TRUE, FALSE]
```

Using the `CreateAt()` method, it is easy to gain access to any specific element in `hconfig`. Since `hconfig` is a *sequence*, the proper access is by *index*.

```
! type(ESMF_HConfig) :: hconfigTemp
hconfigTemp = ESMF_HConfigCreateAt(hconfig, index=3, rc=rc)
```

This creates a temporary HConfig object that *references* the 3rd element of the sequence stored by `hconfig`. If `hconfigTemp` were to be saved to file, it would have the following content.

```
{k1: 7, k2: 25}
```

Using the `Set()` methods, contents in `hconfigTemp`, and thus in the 3rd element of `hconfig` can be modified. The content of `hconfigTemp` is a *map*, and the proper access is by *map key*. Here key "k2" is being modified.

```
call ESMF_HConfigSet(hconfigTemp, 12.5, keyString="k2", rc=rc)
```

The `hconfigTemp` is a reference to a *map*, and new elements can be added using the `addKeyString` argument.

```
call ESMF_HConfigAdd(hconfigTemp, .true., addKeyString="k3", rc=rc)
```

```
call ESMF_HConfigDestroy(hconfigTemp, rc=rc)
```

After these operations, the content of `hconfig` has changed to

```
- first added item
- 12.5700000000
- {k1: 7, k2: 12.5000000000, k3: True}
- simple_list: [1, 2, 3, abc, b, TRUE]
  simple_map:
    car: red
    [bike, {p1: 10, p2: 20}]: [bmx, mountain, street]
    plane: [TRUE, FALSE]
```

Notice that while `hconfigTemp` should be destroyed explicitly, as in the example above, doing so does *not* affect the referenced node inside the `hconfig` object. In other words, `hconfigTemp` was a reference, and *not* a deep copy of the node! There is some allocated memory associated with the `hconfigTemp` reference that gets cleaned up with the `Destroy()` call, but it does not affect the reference itself.

The `Set()` method can also be used to edit the element referenced itself. Here the 4th element in the `hconfig` sequence is set to be a simple scalar string value using this approach.

```
! type(ESMF_HConfig) :: hconfigTemp
hconfigTemp = ESMF_HConfigCreateAt(hconfig, index=4, rc=rc)
```

```
call ESMF_HConfigSet(hconfigTemp, "Simple scalar string value", rc=rc)
```

```
call ESMF_HConfigDestroy(hconfigTemp, rc=rc)
```

The content of `hconfig` has been updated as below.

```
- first added item
- 12.5700000000
- {k1: 7, k2: 12.5000000000, k3: True}
- Simple scalar string value
```

There is a simpler alternative for *direct* element editing in an HConfig object via the `Set()` method. Using the `index` or `keyString` argument, a sequence or map element, respectively, can be edited directly. For instance,

```
call ESMF_HConfigSet(hconfig, "[a, b, c]", index=4, rc=rc)
```

sets the 4th element of `hconfig` directly, without the need of a temporary HConfig variable. This updates the content to:

```
- first added item
- 12.5700000000
- {k1: 7, k2: 12.5000000000, k3: True}
- [a, b, c]
```

Elements can be deleted from a HConfig object holding a sequence or map using the `Remove()` method, specifying the *index* or *map key*, respectively. Here the 2nd element of the sequence held by `hconfig` is removed.

```
call ESMF_HConfigRemove(hconfig, index=2, rc=rc)
```

The result is a sequence with only three remaining elements.

```
- first added item
- {k1: 7, k2: 12.5000000000, k3: True}
- [a, b, c]
```

To demonstrate removal of an element from a *map*, the second `hconfig` element is referenced by a temporary HConfig object. The element with key "k2" is then removed using the respective `Remove()` method.

```
! type(ESMF_HConfig) :: hconfigTemp
hconfigTemp = ESMF_HConfigCreateAt(hconfig, index=2, rc=rc)

call ESMF_HConfigRemove(hconfigTemp, keyString="k2", rc=rc)

call ESMF_HConfigDestroy(hconfigTemp, rc=rc)
```

The resulting `hconfig` content is as expected.

```
- first added item
- {k1: 7, k3: True}
- [a, b, c]
```

Finally the entire contents of `hconfig` can be deleted by setting the node itself to one of the special NULL values.

```
call ESMF_HConfigSet(hconfig, "NULL", rc=rc)
```

If saved to file, the contents of `hconfig` shows up as a simple tilde character, indicating its NULL value.

```
~
```

At this point `hconfig` is neither a *sequence* nor a *map*. It is NULL. Adding a map element, i.e. an element with a *key*, turns `hconfig` into a map.

```
call ESMF_HConfigAdd(hconfig, "first added item", addKeyString="item1", rc=rc)
```

The contents of `hconfig` now is a map with a single entry: character, indicating its NULL value.

```
item1: first added item
```

As in other contexts before, the content as well as the specified `addKeyString` can be of any legal YAML syntax. This is demonstrated in the following `Add()` calls.

```
! Add YAML sequence content with simple scalar key.
call ESMF_HConfigAdd(hconfig, "[2, added, item]", addKeyString="item2", rc=rc)

! Add simple scalar content with a YAML map as key.
call ESMF_HConfigAdd(hconfig, "third added item", addKeyString="{item: 3}", &
  rc=rc)

! Add complex YAML content with YAML sequence as key.
call ESMF_HConfigAdd(hconfig, "{4th: item, 5th: [true, false]}", &
  addKeyString="[1, 2, 3, 4]", rc=rc)
```

Resulting in the final contents of `hconfig`:

```
item1: first added item
item2: [2, added, item]
{item: 3}: third added item
[1, 2, 3, 4]: {4th: item, 5th: [true, false]}
```

Finally clean up `hconfig`.

```
! Destroy hconfig when done with it.
call ESMF_HConfigDestroy(hconfig, rc=rc)
```

49.3.15 Working with multiple YAML documents

The YAML standard supports multiple documents in a single file by separating each document with a line containing three dashes (---). Optionally the end of each document may be indicated by three periods (...). For example, the following YAML file contains three documents (notice the optional usage of the document end marker):

```
---
- This
- is
- the
- first document.
...
---
- And
- a second document.
---
- And
- finally a
- third document.
```

All of the documents contained in a YAML file can be loaded into a single HConfig object all at once.

```
! type(ESMF_HConfig) :: hconfig
hconfig = ESMF_HConfigCreate(filename="multiDoc.yaml", rc=rc)
```

The number of documents held by `hconfig` can be queried.

```
! integer :: docCount
docCount = ESMF_HConfigGetDocCount(hconfig, rc=rc)
```

When saving `hconfig`, a multi-document YAML file will be written.

```
call ESMF_HConfigFileSave(hconfig, filename="multi_00.yaml", rc=rc)
```

The `ESMF_HConfigFileSave()` method implements strict usage of both document markers when saving a multi-document HConfig object.

```
---
- This
- is
- the
- first document.
...
---
- And
- a second document.
...
---
- And
- finally a
- third document.
...
```

The content of the hconfig object can be written to the ESMF log file as usual.

```
call ESMF_HConfigLog(hconfig, prefix="my-multi-doc: ", rc=rc)
```

The optional doc argument can be specified to save or log a specific document of the multi-document hconfig object.

```
call ESMF_HConfigFileSave(hconfig, filename="multi_01.yaml", doc=2, rc=rc)
```

This operation results in a single document file:

```
- And
- a second document.
```

The ESMF_HConfigFileLoad() method also accepts the optional doc argument. When specified, the result is a single-document hconfig object, holding the content of the indicated document within the loaded file.

```
call ESMF_HConfigFileLoad(hconfig, filename="multiDoc.yaml", doc=3, rc=rc)
```

Saving hconfig to file shows the expected situation.

```
call ESMF_HConfigFileSave(hconfig, filename="multi_02.yaml", rc=rc)
```

Resulting in:

```
- And
- finally a
- third document.
```

Most HConfig methods provide the optional doc argument. If present, the method applies to the specified document. The default for when the doc argument is not present, for most methods is to use the first document in the object. The exceptions to this rule are the ESMF_HConfigFileSave() and ESMF_HConfigFileLoad() methods. Here the default is to apply the operation to *all* documents.

When done, clean up hconfig as usual.

```
! Destroy hconfig when done with it.
call ESMF_HConfigDestroy(hconfig, rc=rc)
```

49.3.16 Sequence shortcuts for: Create, As, Add, and Set

The HConfig class offers shortcut methods for the sake of convenience when working with sequences where all elements are of the same typekind. In these cases a sequence can be represented as a one-dimensional Fortran array. The interfaces are overloaded for one-dimensional string, logical, I4, I8, R4, and R8 typekinds.

Using a Fortran array constructor for the actual argument, a sequence of I4 data is created.

```
! type(ESMF_HConfig) :: hconfig
hconfig = ESMF_HConfigCreate([1,2,3], rc=rc)
```

The content of hconfig can be accessed in the usual manner, via iterators or indexed access. Alternatively, the sequence of I4 elements can be retrieved in a single call using a one-dimensional allocatable Fortran array of the appropriate typekind.

```
! integer(ESMF_KIND_I4), allocatable :: valueI4Seq(:)
valueI4Seq = ESMF_HConfigAsI4Seq(hconfig, rc=rc)
```

The optional, intent(out) argument asOkay is available as in the scalar access methods. If specified, errors triggered by unsupported typekind conversion exceptions are suppressed, and instead asOkay == .false. is returned by the call.

Here an attempt is made to access the content of hconfig as a sequence of logicals. This is not supported, and will be flagged in the return value of asOkay.

```
! logical, allocatable :: valueLSeq(:)
valueLSeq = ESMF_HConfigAsLogicalSeq(hconfig, asOkay=asOkay, rc=rc)
```

Finally the content of hconfig is accessed as a sequence of strings. This is always supported since every typekind can be represented in string form.

```
! character(len=:), allocatable :: valueSSeq(:)
valueSSeq = ESMF_HConfigAsStringSeq(hconfig, stringLen=10, asOkay=asOkay, rc=rc)
```

Next hconfig is cleaned up before re-creating it as an empty HConfig object.

```
! Clean up hconfig.
call ESMF_HConfigDestroy(hconfig, rc=rc)

! type(ESMF_HConfig) :: hconfig
hconfig = ESMF_HConfigCreate(rc=rc)
```

Sequences can be added to hconfig conveniently using the overloaded Add() interfaces that accept one-dimensional Fortran arrays. Here a sequence of strings is added as the value of a map entry with key string "k1".

```
call ESMF_HConfigAdd(hconfig, ["aaa","bbb","ccc"], addKeyString="k1", rc=rc)
```

Next a sequence of R4 values is added to the map held by hconfig, under key string "k2".

```
call ESMF_HConfigAdd(hconfig, [1.0,1.25,1.5], addKeyString="k2", rc=rc)
```

At this point hconfig contains the following information:

```
k1:
  - aaa
  - bbb
  - ccc
k2:
  - 1
  - 1.25
  - 1.5
```

The `Set()` interfaces are also overloaded to accept one-dimensional Fortran arrays as input. This makes it easy to set any node to a sequence that is available as Fortran array. Here the value associated with key "k1" is changed to a list of two logicals.

```
call ESMF_HConfigSet(hconfig, [.true.,.false.], keyString="k1", rc=rc)
```

This changes the content of `hconfig` as expected.

```
k1:
  - True
  - False
k2:
  - 1
  - 1.25
  - 1.5
```

Finally clean up `hconfig` as usual.

```
! Destroy hconfig when done with it.
call ESMF_HConfigDestroy(hconfig, rc=rc)
```

49.4 Restrictions and Future Work

- The YAML Core schema, which is an extension of the JSON schema, is implemented and used to resolve non-specific tags under HConfig. There is currently no mechanism implemented to switch to a different schema for tag resolution.
- Currently the only available removal method for HConfig *map* objects requires that *keys* be simple scalar strings.
- There is currently no method implemented that allows setting of tags from from the API.

49.5 Design and Implementation Notes

The ESMF HConfig class is implemented on top of YAML-CPP (https://github.com/jbeder/yaml-cpp). A copy of YAML-CPP is included in the ESMF source tree under ./src/prologue/yaml-cpp. It is used by a number of ESMF/NUOPC functions, including HConfig.

49.6 Class API

49.6.1 ESMF_HConfigAssignment(=) - HConfig assignment

INTERFACE:

```
interface assignment(=)
hconfig1 = hconfig2
```

ARGUMENTS:

```
type(ESMF_HConfig) :: hconfig1
type(ESMF_HConfig) :: hconfig2
```

DESCRIPTION:

Assign hconfig1 as an alias to the same ESMF HConfig object in memory as hconfig2. If hconfig2 is invalid, then hconfig1 will be equally invalid after the assignment.

The arguments are:

hconfig1 The `ESMF_HConfig` object on the left hand side of the assignment.

hconfig2 The `ESMF_HConfig` object on the right hand side of the assignment.

49.6.2 ESMF_HConfigOperator(==) - HConfig equality operator

INTERFACE:

```
interface operator(==)
  if (hconfig1 == hconfig2) then ... endif
            OR
  result = (hconfig1 == hconfig2)
```

RETURN VALUE:

```
logical :: result
```

ARGUMENTS:

```
type(ESMF_HConfig), intent(in) :: hconfig1
type(ESMF_HConfig), intent(in) :: hconfig2
```

DESCRIPTION:

Test whether hconfig1 and hconfig2 are valid aliases to the same ESMF HConfig object in memory. For a more general comparison of two ESMF HConfigs, going beyond the simple alias test, the `ESMF_HConfigMatch()` function (49.6.44) must be used.

The arguments are:

hconfig1 The `ESMF_HConfig` object on the left hand side of the equality operation.

hconfig2 The `ESMF_HConfig` object on the right hand side of the equality operation.

49.6.3 ESMF_HConfigOperator(/=) - HConfig not equal operator

INTERFACE:

```
interface operator(/=)
  if (hconfig1 /= hconfig2) then ... endif
            OR
  result = (hconfig1 /= hconfig2)
```

RETURN VALUE:

```
logical :: result
```

ARGUMENTS:

```
type(ESMF_HConfig), intent(in) :: hconfig1
type(ESMF_HConfig), intent(in) :: hconfig2
```

DESCRIPTION:

Test whether hconfig1 and hconfig2 are *not* valid aliases to the same ESMF HConfig object in memory. For a more general comparison of two ESMF HConfigs, going beyond the simple alias test, the `ESMF_HConfigMatch()` function (49.6.44) must be used.

The arguments are:

hconfig1 The `ESMF_HConfig` object on the left hand side of the non-equality operation.

hconfig2 The `ESMF_HConfig` object on the right hand side of the non-equality operation.

49.6.4 ESMF_HConfigAdd - Add <Type> content to HConfig object

INTERFACE:

```
subroutine ESMF_HConfigAdd(hconfig, content, &
  addKey, addKeyString, index, keyString, doc, rc)
```

ARGUMENTS:

```
  type(ESMF_HConfig[Iter]), intent(in)      :: hconfig
  <Type>,                   intent(in)      :: content[(:)]
-- The following arguments require argument keyword syntax (e.g. rc=rc). --
  type(ESMF_HConfig), intent(in),  optional :: addKey
  character(*),       intent(in),  optional :: addKeyString
  integer,            intent(in),  optional :: index
  character(*),       intent(in),  optional :: keyString
  integer,            intent(in),  optional :: doc
  integer,            intent(out), optional :: rc
```

DESCRIPTION:

Add the content of type <Type> to the `hconfig`, at the current location, or as specified by `index` or `keyString` (mutually exclusive!). Most <Type> options support the sequence array variant `(:)` in addition to the scalar variant.

If either `addKey` or `addKeyString` (mutually exclusive!) is specified, then add a new map element with the respective *key*. Otherwise add a new list element at the end of the list. Error checking is implemented to ensure respective conditions are met.

The supported <Type> options are:

- `type(HConfig)` (Scalar only variant! Only a single HConfig object can be provided.)
- `integer(ESMF_KIND_I4)`
- `integer(ESMF_KIND_I8)`
- `logical`
- `real(ESMF_KIND_R4)`
- `real(ESMF_KIND_R8)`
- `character(*)`

The arguments are:

hconfig `ESMF_HConfig` or `ESMF_HConfigIter` object.

content The content to be added.

[addKey] The key under which to add the new map item. Muturally exclusive with `addKeyString`.

[addKeyString] The key string under which to add the new map item. Muturally exclusive with `addKey`.

[index] Attempt to access by index if specified. Requires `hconfig` of NodeType Sequence. Muturally exclusive with `keyString`.

[keyString] Attempt to access by key string if specified. Requires `hconfig` of NodeType Map. Muturally exclusive with `index`.

[doc] The doc index. Defaults to the first document.

[rc] Return code; equals `ESMF_SUCCESS` if there are no errors.

49.6.5 ESMF_HConfigAddMapKey - Add <Type> content to HConfig MapKey object

INTERFACE:

```
subroutine ESMF_HConfigAddMapKey(hconfig, content, &
  addKey, addKeyString, index, keyString, doc, rc)
```

ARGUMENTS:

```
     type(ESMF_HConfigIter), intent(in)        :: hconfig
     <Type>,                 intent(in)        :: content[(:)]
-- The following arguments require argument keyword syntax (e.g. rc=rc). --
     type(ESMF_HConfig), intent(in),  optional :: addKey
     character(*),       intent(in),  optional :: addKeyString
     integer,            intent(in),  optional :: index
     character(*),       intent(in),  optional :: keyString
     integer,            intent(in),  optional :: doc
     integer,            intent(out), optional :: rc
```

DESCRIPTION:

Add the content of type <Type> to the `hconfig` map key, at the current location, or as specified by `index` or `keyString` (mutually exclusive!). Most <Type> options support the sequence array variant `(:)` in addition to the scalar variant.

If either `addKey` or `addKeyString` (mutually exclusive!) is specified, then add a new map element with the respective *key*. Otherwise add a new list element at the end of the list. Error checking is implemented to ensure respective conditions are met.

The supported <Type> options are:

- `type(HConfig)` (Scalar only variant! Only a single HConfig object can be provided.)
- `integer(ESMF_KIND_I4)`
- `integer(ESMF_KIND_I8)`
- `logical`
- `real(ESMF_KIND_R4)`
- `real(ESMF_KIND_R8)`
- `character(*)`

The arguments are:

hconfig `ESMF_HConfigIter` object.

content The content to be added.

[addKey] The key under which to add the new map item. Muturally exclusive with `addKeyString`.

[addKeyString] The key string under which to add the new map item. Muturally exclusive with `addKey`.

[index] Attempt to access by index if specified. Requires `hconfig` of NodeType Sequence. Muturally exclusive with `keyString`.

[keyString] Attempt to access by key string if specified. Requires `hconfig` of NodeType Map. Muturally exclusive with `index`.

[doc] The doc index. Defaults to the first document.

[rc] Return code; equals `ESMF_SUCCESS` if there are no errors.

49.6.6 ESMF_HConfigAddMapVal - Add <Type> content to HConfig MapVal object

INTERFACE:

```
    subroutine ESMF_HConfigAddMapVal(hconfig, content, &
      addKey, addKeyString, index, keyString, doc, rc)
```

ARGUMENTS:

```
      type(ESMF_HConfigIter), intent(in)        :: hconfig
      <Type>,             intent(in)            :: content[(:)]
 -- The following arguments require argument keyword syntax (e.g. rc=rc). --
      type(ESMF_HConfig), intent(in),  optional :: addKey
      character(*),       intent(in),  optional :: addKeyString
      integer,            intent(in),  optional :: index
      character(*),       intent(in),  optional :: keyString
      integer,            intent(in),  optional :: doc
      integer,            intent(out), optional :: rc
```

DESCRIPTION:

Add the content of type <Type> to the `hconfig` map value, at the current location, or as specified by `index` or `keyString` (mutually exclusive!). Most <Type> options support the sequence array variant `(:)` in addition to the scalar variant.

If either `addKey` or `addKeyString` (mutually exclusive!) is specified, then add a new map element with the respective *key*. Otherwise add a new list element at the end of the list. Error checking is implemented to ensure respective conditions are met.

The supported <Type> options are:

- `type(HConfig)` (Scalar only variant! Only a single HConfig object can be provided.)
- `integer(ESMF_KIND_I4)`
- `integer(ESMF_KIND_I8)`
- `logical`
- `real(ESMF_KIND_R4)`
- `real(ESMF_KIND_R8)`
- `character(*)`

The arguments are:

hconfig `ESMF_HConfigIter` object.

content The content to be added.

[addKey] The key under which to add the new map item. Muturally exclusive with `addKeyString`.

[addKeyString] The key string under which to add the new map item. Muturally exclusive with `addKey`.

[index] Attempt to access by index if specified. Requires `hconfig` of NodeType Sequence. Muturally exclusive with `keyString`.

[keyString] Attempt to access by key string if specified. Requires `hconfig` of NodeType Map. Muturally exclusive with `index`.

[doc] The doc index. Defaults to the first document.

[rc] Return code; equals `ESMF_SUCCESS` if there are no errors.

49.6.7 ESMF_HConfigAs<TypeSpec> - Return value as <Type>

INTERFACE:

```
function ESMF_HConfigAs<TypeSpec>(hconfig, index, keyString, &
  doc, asOkay, rc)
```

RETURN VALUE:

```
  <Type> :: ESMF_HConfigAs<TypeSpec>
```

ARGUMENTS:

```
  type(ESMF_HConfig[Iter]) , intent(in)     :: hconfig
-- The following arguments require argument keyword syntax (e.g. rc=rc). --
  integer,            intent(in),  optional :: index
  character(*),       intent(in),  optional :: keyString
  integer,            intent(in),  optional :: doc
  logical,            intent(out), optional :: asOkay
  integer,            intent(out), optional :: rc
```

DESCRIPTION:

Return the value of item `hconfig` interpreted as <Type>. The returned value is only valid if `rc == ESMF_SUCCESS`, and, if provided, `asOkay == .true.`.

The supported <Type> / <TypeSpec> options are:

- `integer(ESMF_KIND_I4)/I4`
- `integer(ESMF_KIND_I8)/I8`
- `logical/Logical`
- `real(ESMF_KIND_R4)/R4`
- `real(ESMF_KIND_R8)/R8`
- `character(len=:), allocatable/String`

The arguments are:

hconfig `ESMF_HConfig` or `ESMF_HConfigIter` object.

[index] Attempt to access by index if specified. Requires `hconfig` of NodeType Sequence. Muturally exclusive with `keyString`.

[keyString] Attempt to access by key string if specified. Requires `hconfig` of NodeType Map. Muturally exclusive with `index`.

[doc] The doc index. Defaults to the first document.

[asOkay] Set to `.true.` for successful convertion to the requested typekind. Set to `.false.` otherwise. By default, i.e. without `asOkay`, the latter condition leads to `rc /= ESMF_SUCCESS`. Providing `asOkay` returns `rc == ESMF_SUCCESS` in either case, and the validity of the returned converted value is determined by `asOkay`.

[rc] Return code; equals `ESMF_SUCCESS` if there are no errors.

49.6.8 ESMF_HConfigAs<TypeSpec>MapKey - Return map key as <Type>

INTERFACE:

```
function ESMF_HConfigAs<TypeSpec>MapKey(hconfig, index, keyString, &
  doc, asOkay, rc)
```

RETURN VALUE:

```
<Type> :: ESMF_HConfigAs<TypeSpec>MapKey
```

ARGUMENTS:

```
  type(ESMF_HConfigIter), intent(in)        :: hconfig
-- The following arguments require argument keyword syntax (e.g. rc=rc). --
  integer,            intent(in),  optional :: index
  character(*),       intent(in),  optional :: keyString
  integer,            intent(in),  optional :: doc
  logical,            intent(out), optional :: asOkay
  integer,            intent(out), optional :: rc
```

DESCRIPTION:

Return the map key of item `hconfig` interpreted as <Type>. The returned value is only valid if `rc == ESMF_SUCCESS`, and, if provided, `asOkay == .true.`.

The supported <Type> / <TypeSpec> options are:

- `integer(ESMF_KIND_I4)` / `I4`
- `integer(ESMF_KIND_I8)` / `I8`

- `logical/Logical`
- `real(ESMF_KIND_R4)/R4`
- `real(ESMF_KIND_R8)/R8`
- `character(len=:), allocatable/String`

The arguments are:

hconfig `ESMF_HConfigIter` object.

[index] Attempt to access by index if specified. Requires `hconfig` of NodeType Sequence. Muturally exclusive with `keyString`.

[keyString] Attempt to access by key string if specified. Requires `hconfig` of NodeType Map. Muturally exclusive with `index`.

[doc] The doc index. Defaults to the first document.

[asOkay] Set to `.true.` for successful convertion to the requested typekind. Set to `.false.` otherwise. By default, i.e. without `asOkay`, the latter condition leads to `rc /= ESMF_SUCCESS`. Providing `asOkay` returns `rc == ESMF_SUCCESS` in either case, and the validity of the returned converted value is determined by `asOkay`.

[rc] Return code; equals `ESMF_SUCCESS` if there are no errors.

49.6.9 ESMF_HConfigAs<TypeSpec>MapVal - Return map value as <Type>

INTERFACE:

```
function ESMF_HConfigAs<TypeSpec>MapVal(hconfig, index, keyString, &
  doc, asOkay, rc)
```

RETURN VALUE:

```
<Type> :: ESMF_HConfigAs<TypeSpec>MapVal
```

ARGUMENTS:

```
  type(ESMF_HConfigIter), intent(in)        :: hconfig
-- The following arguments require argument keyword syntax (e.g. rc=rc). --
  integer,            intent(in),  optional :: index
  character(*),       intent(in),  optional :: keyString
  integer,            intent(in),  optional :: doc
  logical,            intent(out), optional :: asOkay
  integer,            intent(out), optional :: rc
```

DESCRIPTION:

Return the map value of item `hconfig` interpreted as <Type>. The returned value is only valid if `rc == ESMF_SUCCESS`, and, if provided, `asOkay == .true.`.

The supported <Type> / <TypeSpec> options are:

- `integer(ESMF_KIND_I4)/I4`
- `integer(ESMF_KIND_I8)/I8`
- `logical/Logical`
- `real(ESMF_KIND_R4)/R4`
- `real(ESMF_KIND_R8)/R8`
- `character(len=:), allocatable/String`

The arguments are:

hconfig `ESMF_HConfigIter` object.

[index] Attempt to access by index if specified. Requires `hconfig` of NodeType Sequence. Muturally exclusive with `keyString`.

[keyString] Attempt to access by key string if specified. Requires `hconfig` of NodeType Map. Muturally exclusive with `index`.

[doc] The doc index. Defaults to the first document.

[asOkay] Set to `.true.` for successful convertion to the requested typekind. Set to `.false.` otherwise. By default, i.e. without `asOkay`, the latter condition leads to `rc /= ESMF_SUCCESS`. Providing `asOkay` returns `rc == ESMF_SUCCESS` in either case, and the validity of the returned converted value is determined by `asOkay`.

[rc] Return code; equals `ESMF_SUCCESS` if there are no errors.

49.6.10 ESMF_HConfigAs<TypeSpec>Seq - Return value as sequence array of <Type>

INTERFACE:

```
function ESMF_HConfigAs<TypeSpec>Seq(hconfig, index, keyString, &
  doc, asOkay, rc)
```

RETURN VALUE:

```
  <Type>, allocatable :: ESMF_HConfigAs<TypeSpec>Seq(:)
```

ARGUMENTS:

```
  type(ESMF_HConfig[Iter]), intent(in)      :: hconfig
-- The following arguments require argument keyword syntax (e.g. rc=rc). --
  integer,            intent(in),  optional :: index
  character(*),       intent(in),  optional :: keyString
  integer,            intent(in),  optional :: doc
  logical,            intent(out), optional :: asOkay
  integer,            intent(out), optional :: rc
```

DESCRIPTION:

Return the value of item `hconfig` interpreted as sequence of <Type>. The returned value is only valid if `rc == ESMF_SUCCESS`, and, if provided, `asOkay == .true.`.

The supported <Type> / <TypeSpec> options are:

- `integer(ESMF_KIND_I4)` / `I4`
- `integer(ESMF_KIND_I8)` / `I8`
- `logical` / `Logical`
- `real(ESMF_KIND_R4)` / `R4`
- `real(ESMF_KIND_R8)` / `R8`
- `character(len=:), allocatable` / `String` (See note about `stringLen` argument below!)

An extra non-optional argument `stringLen` must be provided for the **String** option. This argument specifies the number of characters in each of the output strings. Longer actual string values are tuncated, while shorter actual string values are padded with white space.

The arguments are:

hconfig `ESMF_HConfig` or `ESMF_HConfigIter` object.

[index] Attempt to access by index if specified. Requires `hconfig` of NodeType Sequence. Muturally exclusive with `keyString`.

[keyString] Attempt to access by key string if specified. Requires `hconfig` of NodeType Map. Muturally exclusive with `index`.

[doc] The doc index. Defaults to the first document.

[asOkay] Set to `.true.` for successful convertion to the requested typekind. Set to `.false.` otherwise. By default, i.e. without `asOkay`, the latter condition leads to `rc /= ESMF_SUCCESS`. Providing `asOkay` returns `rc == ESMF_SUCCESS` in either case, and the validity of the returned converted value is determined by `asOkay`.

[rc] Return code; equals `ESMF_SUCCESS` if there are no errors.

49.6.11 ESMF_HConfigAs<TypeSpec>SeqMapKey - Return map key value as sequence array of <Type>

INTERFACE:

```
function ESMF_HConfigAs<TypeSpec>SeqMapKey(hconfig, index, keyString, &
  doc, asOkay, rc)
```

RETURN VALUE:

```
<Type>, allocatable :: ESMF_HConfigAs<TypeSpec>SeqMapKey(:)
```

ARGUMENTS:

```
    type(ESMF_HConfigIter), intent(in)        :: hconfig
-- The following arguments require argument keyword syntax (e.g. rc=rc). --
    integer,            intent(in),  optional :: index
    character(*),       intent(in),  optional :: keyString
    integer,            intent(in),  optional :: doc
    logical,            intent(out), optional :: asOkay
    integer,            intent(out), optional :: rc
```

DESCRIPTION:

Return the map key of item `hconfig` interpreted as sequence of <Type>. The returned value is only valid if `rc == ESMF_SUCCESS`, and, if provided, `asOkay == .true.`.

The supported <Type> / <TypeSpec> options are:

- `integer(ESMF_KIND_I4)` / `I4`
- `integer(ESMF_KIND_I8)` / `I8`
- `logical` / `Logical`
- `real(ESMF_KIND_R4)` / `R4`
- `real(ESMF_KIND_R8)` / `R8`
- `character(len=:), allocatable` / `String` (See note about `stringLen` argument below!)

An extra non-optional argument `stringLen` must be provided for the **String** option. This argument specifies the number of characters in each of the output strings. Longer actual string values are tuncated, while shorter actual string values are padded with white space.

The arguments are:

hconfig `ESMF_HConfig` object.

[index] Attempt to access by index if specified. Requires `hconfig` of NodeType Sequence. Muturally exclusive with `keyString`.

[keyString] Attempt to access by key string if specified. Requires `hconfig` of NodeType Map. Muturally exclusive with `index`.

[doc] The doc index. Defaults to the first document.

[asOkay] Set to `.true.` for successful convertion to the requested typekind. Set to `.false.` otherwise. By default, i.e. without `asOkay`, the latter condition leads to `rc /= ESMF_SUCCESS`. Providing `asOkay` returns `rc == ESMF_SUCCESS` in either case, and the validity of the returned converted value is determined by `asOkay`.

[rc] Return code; equals `ESMF_SUCCESS` if there are no errors.

49.6.12 ESMF_HConfigAs<TypeSpec>SeqMapVal - Return map value as sequence array of <Type>

INTERFACE:

```
function ESMF_HConfigAs<TypeSpec>SeqMapVal(hconfig, index, keyString, &
  doc, asOkay, rc)
```

RETURN VALUE:

```
<Type>, allocatable :: ESMF_HConfigAs<TypeSpec>SeqMapVal(:)
```

ARGUMENTS:

```
  type(ESMF_HConfigIter), intent(in)        :: hconfig
-- The following arguments require argument keyword syntax (e.g. rc=rc). --
  integer,            intent(in),  optional :: index
  character(*),       intent(in),  optional :: keyString
  integer,            intent(in),  optional :: doc
  logical,            intent(out), optional :: asOkay
  integer,            intent(out), optional :: rc
```

DESCRIPTION:

Return the map value of item `hconfig` interpreted as sequence of <Type>. The returned value is only valid if `rc == ESMF_SUCCESS`, and, if provided, `asOkay == .true.`.

The supported <Type> / <TypeSpec> options are:

- `integer(ESMF_KIND_I4)` / `I4`
- `integer(ESMF_KIND_I8)` / `I8`
- `logical` / `Logical`
- `real(ESMF_KIND_R4)` / `R4`
- `real(ESMF_KIND_R8)` / `R8`
- `character(len=:), allocatable` / `String` (See note about `stringLen` argument below!)

An extra non-optional argument `stringLen` must be provided for the **String** option. This argument specifies the number of characters in each of the output strings. Longer actual string values are tuncated, while shorter actual string values are padded with white space.

The arguments are:

hconfig `ESMF_HConfigIter` object.

[index] Attempt to access by index if specified. Requires `hconfig` of NodeType Sequence. Muturally exclusive with `keyString`.

[keyString] Attempt to access by key string if specified. Requires `hconfig` of NodeType Map. Muturally exclusive with `index`.

[doc] The doc index. Defaults to the first document.

[asOkay] Set to `.true.` for successful convertion to the requested typekind. Set to `.false.` otherwise. By default, i.e. without `asOkay`, the latter condition leads to `rc /= ESMF_SUCCESS`. Providing `asOkay` returns `rc == ESMF_SUCCESS` in either case, and the validity of the returned converted value is determined by `asOkay`.

[rc] Return code; equals `ESMF_SUCCESS` if there are no errors.

49.6.13 ESMF_HConfigCreate - Create HConfig object from YAML string or file

INTERFACE:

```
! Private name; call using ESMF_HConfigCreate()
function ESMF_HConfigCreateDefault(content, filename, rc)
```

RETURN VALUE:

```
type(ESMF_HConfig) :: ESMF_HConfigCreateDefault
```

ARGUMENTS:

```
-- The following arguments require argument keyword syntax (e.g. rc=rc). --
    character(len=*),   intent(in),  optional :: content
    character(len=*),   intent(in),  optional :: filename
    integer,            intent(out), optional :: rc
```

DESCRIPTION:

Create a new HConfig object. The object is empty unless either the `content` or `filename` argument is specified.

The arguments are:

[content] String containing the YAML text. Mutually exclusive with `filename` argument.

[filename] Name of the YAML file to be loaded. Mutually exclusive with `content` argument.

[rc] Return code; equals `ESMF_SUCCESS` if there are no errors.

49.6.14 ESMF_HConfigCreate - Create HConfig object from HConfig object

INTERFACE:

```
! Private name; call using ESMF_HConfigCreate()
function ESMF_HConfigCreateHConfig(content, rc)
```

RETURN VALUE:

```
type(ESMF_HConfig) :: ESMF_HConfigCreateHConfig
```

ARGUMENTS:

```
     type(ESMF_HConfig), intent(in)            :: content
 -- The following arguments require argument keyword syntax (e.g. rc=rc). --
     integer,            intent(out), optional :: rc
```

DESCRIPTION:

Create a new HConfig object from existing HConfig object as a deep copy.

The arguments are:

content HConfig content.

[rc] Return code; equals `ESMF_SUCCESS` if there are no errors.

49.6.15 ESMF_HConfigCreate - Create HConfig object from <Type> content

INTERFACE:

```
function ESMF_HConfigCreate(content, rc)
```

RETURN VALUE:

```
type(ESMF_HConfig) :: ESMF_HConfigCreate
```

ARGUMENTS:

```
      <Type>,  intent(in)            :: content[(:)]
 -- The following arguments require argument keyword syntax (e.g. rc=rc). --
      integer, intent(out), optional :: rc
```

DESCRIPTION:

Create a new HConfig object from content of type <Type>. All <Type> options support the sequence array variant `(:)` in addition to the scalar variant.

The supported <Type> options are:

- `integer(ESMF_KIND_I4)`
- `integer(ESMF_KIND_I8)`
- `logical`

- `real(ESMF_KIND_R4)`
- `real(ESMF_KIND_R8)`

The arguments are:

content Content of type <Type>.

[rc] Return code; equals `ESMF_SUCCESS` if there are no errors.

49.6.16 ESMF_HConfigCreate - Create HConfig object from String sequence array

INTERFACE:

```
! Private name; call using ESMF_HConfigCreate()
function ESMF_HConfigCreateStringSeq(content, rc)
```

RETURN VALUE:

```
type(ESMF_HConfig) :: ESMF_HConfigCreateStringSeq
```

ARGUMENTS:

```
 character(len=*),   intent(in)            :: content(:)
-- The following arguments require argument keyword syntax (e.g. rc=rc). --
 integer,            intent(out), optional :: rc
```

DESCRIPTION:

Create a new HConfig object.

The arguments are:

content String content.

[rc] Return code; equals `ESMF_SUCCESS` if there are no errors.

49.6.17 ESMF_HConfigCreateAt - Return HConfig object at location

INTERFACE:

```
function ESMF_HConfigCreateAt(hconfig, index, key, &
  keyString, doc, rc)
```

RETURN VALUE:

```
type(ESMF_HConfig) :: ESMF_HConfigCreateAt
```

ARGUMENTS:

```
     type(ESMF_HConfig[Iter]), intent(in)      :: hconfig
 -- The following arguments require argument keyword syntax (e.g. rc=rc). --
     integer,            intent(in),  optional :: index
     type(ESMF_HConfig), intent(in),  optional :: key
     character(*),       intent(in),  optional :: keyString
     integer,            intent(in),  optional :: doc
     integer,            intent(out), optional :: rc
```

DESCRIPTION:

Create a new HConfig object at the current iteration, or as specified by `index`, `key` or `keyString`. The `hconfig` must *not* be a map iterator.

The arguments are:

hconfig `ESMF_HConfig` or `ESMF_HConfigIter` object.

[index] Attempt to access by index if specified. Requires `hconfig` of NodeType Sequence. Muturally exclusive with `key` and `keyString`.

[key] Attempt to access by key if specified. Muturally exclusive with `index` and `keyString`,

[keyString] Attempt to access by key string if specified. Requires `hconfig` of NodeType Map. Muturally exclusive with `index` and `key`.

[doc] The doc index. Defaults to the first document.

[rc] Return code; equals `ESMF_SUCCESS` if there are no errors.

49.6.18 ESMF_HConfigCreateAtMapKey - Return HConfig object at location

INTERFACE:

```
function ESMF_HConfigCreateAtMapKey(hconfig, index, key, &
  keyString, doc, rc)
```

RETURN VALUE:

```
type(ESMF_HConfig) :: ESMF_HConfigCreateAtMapKey
```

ARGUMENTS:

```
    type(ESMF_HConfigIter), intent(in)        :: hconfig
 -- The following arguments require argument keyword syntax (e.g. rc=rc). --
    integer,            intent(in),  optional :: index
    type(ESMF_HConfig), intent(in),  optional :: key
    character(*),       intent(in),  optional :: keyString
    integer,            intent(in),  optional :: doc
    integer,            intent(out), optional :: rc
```

DESCRIPTION:

Create a new HConfig object for a map key at the current iteration, or as specified by `index`, `key` or `keyString`. The `hconfig` *must* be a map iterator.

The arguments are:

hconfig `ESMF_HConfigIter` object.

[index] Attempt to access by index if specified. Requires `hconfig` of NodeType Sequence. Muturally exclusive with `key` and `keyString`.

[key] Attempt to access by key if specified. Muturally exclusive with `index` and `keyString`,

[keyString] Attempt to access by key string if specified. Requires `hconfig` of NodeType Map. Muturally exclusive with `index` and `key`.

[doc] The doc index. Defaults to the first document.

[rc] Return code; equals `ESMF_SUCCESS` if there are no errors.

49.6.19 ESMF_HConfigCreateAtMapVal - Return HConfig object at location

INTERFACE:

```
  function ESMF_HConfigCreateAtMapVal(hconfig, index, key, &
    keyString, doc, rc)
```

RETURN VALUE:

```
    type(ESMF_HConfig) :: ESMF_HConfigCreateAtMapVal
```

ARGUMENTS:

```
    type(ESMF_HConfigIter), intent(in)        :: hconfig
 -- The following arguments require argument keyword syntax (e.g. rc=rc). --
    integer,            intent(in),  optional :: index
    type(ESMF_HConfig), intent(in),  optional :: key
    character(*),       intent(in),  optional :: keyString
    integer,            intent(in),  optional :: doc
    integer,            intent(out), optional :: rc
```

DESCRIPTION:

Create a new HConfig object for a map value at the current iteration, or as specified by `index`, `key` or `keyString`. The `hconfig` *must* be a map iterator.

The arguments are:

hconfig `ESMF_HConfigIter` object.

[index] Attempt to access by index if specified. Requires `hconfig` of NodeType Sequence. Muturally exclusive with `key` and `keyString`.

[key] Attempt to access by key if specified. Muturally exclusive with `index` and `keyString`,

[keyString] Attempt to access by key string if specified. Requires `hconfig` of NodeType Map. Muturally exclusive with `index` and `key`.

[doc] The doc index. Defaults to the first document.

[rc] Return code; equals `ESMF_SUCCESS` if there are no errors.

49.6.20 ESMF_HConfigDestroy - Release resources associated with a HConfig

INTERFACE:

```
subroutine ESMF_HConfigDestroy(hconfig, rc)
```

ARGUMENTS:

```
     type(ESMF_HConfig), intent(inout)          :: hconfig
 -- The following arguments require argument keyword syntax (e.g. rc=rc). --
      integer,            intent(out), optional :: rc
```

DESCRIPTION:

Destroys an `ESMF_HConfig`, releasing the resources associated with the object.

The arguments are:

hconfig `ESMF_HConfig` object to be destroyed.

[rc] Return code; equals `ESMF_SUCCESS` if there are no errors.

49.6.21 ESMF_HConfigFileLoad - Load file into HConfig

INTERFACE:

```
subroutine ESMF_HConfigFileLoad(hconfig, filename, doc, rc)
```

ARGUMENTS:

```
     type(ESMF_HConfig), intent(in)            :: hconfig
     character(len=*),   intent(in)            :: filename
 -- The following arguments require argument keyword syntax (e.g. rc=rc). --
     integer,            intent(in),  optional :: doc
     integer,            intent(out), optional :: rc
```

DESCRIPTION:

Load YAML file into `hconfig`.

The arguments are:

hconfig `ESMF_HConfig` object.

filename Name of the YAML file to be loaded.

[doc] The doc index inside the file. If specified, only this single document is loaded from file, resulting in a single document `hconfig` object. Defaults to *all* docs.

[rc] Return code; equals `ESMF_SUCCESS` if there are no errors.

49.6.22 ESMF_HConfigFileSave - Save HConfig to file

INTERFACE:

```
subroutine ESMF_HConfigFileSave(hconfig, filename, doc, rc)
```

ARGUMENTS:

```
     type(ESMF_HConfig), intent(in)            :: hconfig
     character(len=*),   intent(in)            :: filename
 -- The following arguments require argument keyword syntax (e.g. rc=rc). --
     integer,            intent(in),  optional :: doc
     integer,            intent(out), optional :: rc
```

DESCRIPTION:

Save HConfig into YAML file. Only `localPet == 0` does the writing. The `hconfig` must *not* be a map iterator.

The arguments are:

hconfig `ESMF_HConfig` object.

filename Name of the YAML file into which to save.

[doc] The doc index inside `hconfig`. Defaults to *all* docs.

[rc] Return code; equals `ESMF_SUCCESS` if there are no errors.

49.6.23 ESMF_HConfigGetDocCount - Get number of docs in HConfig

INTERFACE:

```
function ESMF_HConfigGetDocCount(hconfig, rc)
```

RETURN VALUE:

```
integer :: ESMF_HConfigGetDocCount
```

ARGUMENTS:

```
    type(ESMF_HConfig), intent(in)            :: hconfig
 -- The following arguments require argument keyword syntax (e.g. rc=rc). --
    integer,            intent(out), optional :: rc
```

DESCRIPTION:

Return the number of documents held by `hconfig`.

The arguments are:

hconfig `ESMF_HConfig` object.

[rc] Return code; equals `ESMF_SUCCESS` if there are no errors.

49.6.24 ESMF_HConfigGetSize - Get size of HConfig node

INTERFACE:

```
function ESMF_HConfigGetSize(hconfig, index, keyString, doc, rc)
```

RETURN VALUE:

```
integer :: ESMF_HConfigGetSize
```

ARGUMENTS:

```
     type(ESMF_HConfig[Iter]), intent(in)      :: hconfig
 -- The following arguments require argument keyword syntax (e.g. rc=rc). --
     integer,            intent(in),  optional :: index
     character(*),       intent(in),  optional :: keyString
     integer,            intent(in),  optional :: doc
     integer,            intent(out), optional :: rc
```

DESCRIPTION:

Return the number of elements in collection `hconfig`.

The arguments are:

hconfig `ESMF_HConfig` or `ESMF_HConfigIter` object.

[index] Attempt to access by index if specified. Requires `hconfig` of NodeType Sequence. Muturally exclusive with `keyString`.

[keyString] Attempt to access by key string if specified. Requires `hconfig` of NodeType Map. Muturally exclusive with `index`.

[doc] The doc index. Defaults to the first document.

[rc] Return code; equals `ESMF_SUCCESS` if there are no errors.

49.6.25 ESMF_HConfigGetSizeMapKey - Get size of HConfig node

INTERFACE:

```
  function ESMF_HConfigGetSizeMapKey(hconfig, index, keyString, &
    doc, rc)
```

RETURN VALUE:

```
    integer :: ESMF_HConfigGetSizeMapKey
```

ARGUMENTS:

```
    type(ESMF_HConfigIter), intent(in)        :: hconfig
 -- The following arguments require argument keyword syntax (e.g. rc=rc). --
    integer,            intent(in),  optional :: index
    character(*),       intent(in),  optional :: keyString
    integer,            intent(in),  optional :: doc
    integer,            intent(out), optional :: rc
```

DESCRIPTION:

Return size of the `hconfig` node.

The arguments are:

hconfig `ESMF_HConfigIter` object.

[index] Attempt to access by index if specified. Requires `hconfig` of NodeType Sequence. Muturally exclusive with `keyString`.

[keyString] Attempt to access by key string if specified. Requires `hconfig` of NodeType Map. Muturally exclusive with `index`.

[doc] The doc index. Defaults to the first document.

[rc] Return code; equals `ESMF_SUCCESS` if there are no errors.

49.6.26 ESMF_HConfigGetSizeMapVal - Get size of HConfig node

INTERFACE:

```
function ESMF_HConfigGetSizeMapVal(hconfig, index, keyString, &
  doc, rc)
```

RETURN VALUE:

```
integer :: ESMF_HConfigGetSizeMapVal
```

ARGUMENTS:

```
     type(ESMF_HConfigIter), intent(in)        :: hconfig
 -- The following arguments require argument keyword syntax (e.g. rc=rc). --
     integer,            intent(in),  optional :: index
     character(*),       intent(in),  optional :: keyString
     integer,            intent(in),  optional :: doc
     integer,            intent(out), optional :: rc
```

DESCRIPTION:

Return size of the `hconfig` node.

The arguments are:

hconfig `ESMF_HConfigIter` object.

[index] Attempt to access by index if specified. Requires `hconfig` of NodeType Sequence. Muturally exclusive with `keyString`.

[keyString] Attempt to access by key string if specified. Requires `hconfig` of NodeType Map. Muturally exclusive with `index`.

[doc] The doc index. Defaults to the first document.

[rc] Return code; equals `ESMF_SUCCESS` if there are no errors.

49.6.27 ESMF_HConfigGetTag - Get tag of HConfig node

INTERFACE:

```
function ESMF_HConfigGetTag(hconfig, index, keyString, doc, rc)
```

RETURN VALUE:

```
character(len=:), allocatable :: ESMF_HConfigGetTag
```

ARGUMENTS:

```
  type(ESMF_HConfig[Iter]), intent(in)      :: hconfig
-- The following arguments require argument keyword syntax (e.g. rc=rc). --
  integer,            intent(in),  optional :: index
  character(*),       intent(in),  optional :: keyString
  integer,            intent(in),  optional :: doc
  integer,            intent(out), optional :: rc
```

DESCRIPTION:

Return tag string of the `hconfig` node.

The arguments are:

hconfig `ESMF_HConfig` or `ESMF_HConfigIter` object.

[index] Attempt to access by index if specified. Requires `hconfig` of NodeType Sequence. Muturally exclusive with `keyString`.

[keyString] Attempt to access by key string if specified. Requires `hconfig` of NodeType Map. Muturally exclusive with `index`.

[doc] The doc index. Defaults to the first document.

[rc] Return code; equals `ESMF_SUCCESS` if there are no errors.

49.6.28 ESMF_HConfigGetTagMapKey - Get tag of map key node

INTERFACE:

```
function ESMF_HConfigGetTagMapKey(hconfig, index, keyString, &
  doc, rc)
```

RETURN VALUE:

```
character(len=:), allocatable :: ESMF_HConfigGetTagMapKey
```

ARGUMENTS:

```
  type(ESMF_HConfigIter), intent(in)        :: hconfig
-- The following arguments require argument keyword syntax (e.g. rc=rc). --
  integer,            intent(in),  optional :: index
  character(*),       intent(in),  optional :: keyString
  integer,            intent(in),  optional :: doc
  integer,            intent(out), optional :: rc
```

DESCRIPTION:

Return tag string of map key of the `hconfig` node.

The arguments are:

hconfig `ESMF_HConfigIter` object.

[index] Attempt to access by index if specified. Requires `hconfig` of NodeType Sequence. Muturally exclusive with `keyString`.

[keyString] Attempt to access by key string if specified. Requires `hconfig` of NodeType Map. Muturally exclusive with `index`.

[doc] The doc index. Defaults to the first document.

[rc] Return code; equals `ESMF_SUCCESS` if there are no errors.

49.6.29 ESMF_HConfigGetTagMapVal - Get tag of map key node

INTERFACE:

```
function ESMF_HConfigGetTagMapVal(hconfig, index, keyString, &
  doc, rc)
```

RETURN VALUE:

```
character(len=:), allocatable :: ESMF_HConfigGetTagMapVal
```

ARGUMENTS:

```
     type(ESMF_HConfigIter), intent(in)        :: hconfig
 -- The following arguments require argument keyword syntax (e.g. rc=rc). --
     integer,            intent(in),  optional :: index
     character(*),       intent(in),  optional :: keyString
     integer,            intent(in),  optional :: doc
     integer,            intent(out), optional :: rc
```

DESCRIPTION:

Return tag string of map key of the `hconfig` node.

The arguments are:

hconfig `ESMF_HConfigIter` object.

[index] Attempt to access by index if specified. Requires `hconfig` of NodeType Sequence. Muturally exclusive with `keyString`.

[keyString] Attempt to access by key string if specified. Requires `hconfig` of NodeType Map. Muturally exclusive with `index`.

[doc] The doc index. Defaults to the first document.

[rc] Return code; equals `ESMF_SUCCESS` if there are no errors.

49.6.30 ESMF_HConfigIs<NodeType> - Check for HConfig node type

INTERFACE:

```
function ESMF_HConfigIs<NodeType>(hconfig, index, keyString, &
  doc, rc)
```

RETURN VALUE:

```
logical :: ESMF_HConfigIs<NodeType>
```

ARGUMENTS:

```
      type(ESMF_HConfig[Iter]), intent(in)      :: hconfig
 -- The following arguments require argument keyword syntax (e.g. rc=rc). --
      integer,            intent(in),  optional :: index
      character(*),       intent(in),  optional :: keyString
      integer,            intent(in),  optional :: doc
      integer,            intent(out), optional :: rc
```

DESCRIPTION:

Return `.true.` if the `hconfig` node is of node type <NodeType>. Otherwise return `.false.`. If an error occurs, i.e. `rc /= ESMF_SUCCESS` is returned, the return value of the function will be `.false.`.

The supported <NodeType> options are:

- Defined
- Null
- Map
- Scalar
- Sequence

The arguments are:

hconfig `ESMF_HConfig` or `ESMF_HConfigIter` object.

[index] Attempt to access by index if specified. Requires `hconfig` of NodeType Sequence. Muturally exclusive with `keyString`.

[keyString] Attempt to access by key string if specified. Requires `hconfig` of NodeType Map. Muturally exclusive with `index`.

[doc] The doc index. Defaults to the first document.

[rc] Return code; equals `ESMF_SUCCESS` if there are no errors.

49.6.31 ESMF_HConfigIs<NodeType>MapKey - Check for HConfig MapKey node type

INTERFACE:

```
function ESMF_HConfigIs<NodeType>MapKey(hconfig, index, keyString, &
  doc, rc)
```

RETURN VALUE:

```
  logical :: ESMF_HConfigIs<NodeType>MapKey
```

ARGUMENTS:

```
  type(ESMF_HConfigIter), intent(in)       :: hconfig
-- The following arguments require argument keyword syntax (e.g. rc=rc). --
  integer,            intent(in),  optional :: index
  character(*),       intent(in),  optional :: keyString
  integer,            intent(in),  optional :: doc
  integer,            intent(out), optional :: rc
```

DESCRIPTION:

Return `.true.` if the `hconfig` MapKey node is of node type <NodeType>. Otherwise return `.false.`. If an error occurs, i.e. `rc /= ESMF_SUCCESS` is returned, the return value of the function will be `.false.`.

The supported <NodeType> options are:

- Defined
- Null
- Map
- Scalar
- Sequence

The arguments are:

hconfig `ESMF_HConfigIter` object.

[index] Attempt to access by index if specified. Requires `hconfig` of NodeType Sequence. Muturally exclusive with `keyString`.

[keyString] Attempt to access by key string if specified. Requires `hconfig` of NodeType Map. Muturally exclusive with `index`.

[doc] The doc index. Defaults to the first document.

[rc] Return code; equals `ESMF_SUCCESS` if there are no errors.

49.6.32 ESMF_HConfigIs<NodeType>MapVal - Check for HConfig MapVal node type

INTERFACE:

```
function ESMF_HConfigIs<NodeType>MapVal(hconfig, index, keyString, &
  doc, rc)
```

RETURN VALUE:

```
  logical :: ESMF_HConfigIs<NodeType>MapVal
```

ARGUMENTS:

```
  type(ESMF_HConfigIter), intent(in)       :: hconfig
-- The following arguments require argument keyword syntax (e.g. rc=rc). --
  integer,            intent(in),  optional :: index
  character(*),       intent(in),  optional :: keyString
  integer,            intent(in),  optional :: doc
  integer,            intent(out), optional :: rc
```

DESCRIPTION:

Return `.true.` if the `hconfig` MapVal node is of node type <NodeType>. Otherwise return `.false.`. If an error occurs, i.e. `rc /= ESMF_SUCCESS` is returned, the return value of the function will be `.false.`.

The supported <NodeType> options are:

- Defined
- Null
- Map
- Scalar
- Sequence

The arguments are:

hconfig `ESMF_HConfigIter` object.

[index] Attempt to access by index if specified. Requires `hconfig` of NodeType Sequence. Muturally exclusive with `keyString`.

[keyString] Attempt to access by key string if specified. Requires `hconfig` of NodeType Map. Muturally exclusive with `index`.

[doc] The doc index. Defaults to the first document.

[rc] Return code; equals `ESMF_SUCCESS` if there are no errors.

49.6.33 ESMF_HConfigIterBegin - Iterator at the beginning

INTERFACE:

```
function ESMF_HConfigIterBegin(hconfig, rc)
```

RETURN VALUE:

```
type(ESMF_HConfigIter) :: ESMF_HConfigIterBegin
```

ARGUMENTS:

```
  type(ESMF_HConfig[Iter]), intent(in)      :: hconfig
-- The following arguments require argument keyword syntax (e.g. rc=rc). --
  integer,            intent(out), optional :: rc
```

DESCRIPTION:

Return an iterator that points to the first item in `hconfig`.

The arguments are:

hconfig `ESMF_HConfig` or `ESMF_HConfigIter` object.

[rc] Return code; equals `ESMF_SUCCESS` if there are no errors.

49.6.34 ESMF_HConfigIterBeginMapKey - Iterator at the beginning

INTERFACE:

```
function ESMF_HConfigIterBeginMapKey(hconfig, rc)
```

RETURN VALUE:

```
type(ESMF_HConfigIter) :: ESMF_HConfigIterBeginMapKey
```

ARGUMENTS:

```
    type(ESMF_HConfigIter), intent(in)        :: hconfig
 -- The following arguments require argument keyword syntax (e.g. rc=rc). --
    integer,            intent(out), optional :: rc
```

DESCRIPTION:

Return an iterator that points to the first item in `hconfig`.

The arguments are:

hconfig `ESMF_HConfigIter` object.

[rc] Return code; equals `ESMF_SUCCESS` if there are no errors.

49.6.35 ESMF_HConfigIterBeginMapVal - Iterator at the beginning

INTERFACE:

```
function ESMF_HConfigIterBeginMapVal(hconfig, rc)
```

RETURN VALUE:

```
type(ESMF_HConfigIter) :: ESMF_HConfigIterBeginMapVal
```

ARGUMENTS:

```
    type(ESMF_HConfigIter), intent(in)        :: hconfig
 -- The following arguments require argument keyword syntax (e.g. rc=rc). --
    integer,            intent(out), optional :: rc
```

DESCRIPTION:

Return an iterator that points to the first item in `hconfig`.

The arguments are:

hconfig `ESMF_HConfigIter` object.

[rc] Return code; equals `ESMF_SUCCESS` if there are no errors.

49.6.36 ESMF_HConfigIterEnd - Iterator at the end

INTERFACE:

```
function ESMF_HConfigIterEnd(hconfig, rc)
```

RETURN VALUE:

```
type(ESMF_HConfigIter) :: ESMF_HConfigIterEnd
```

ARGUMENTS:

```
     type(ESMF_HConfig[Iter]), intent(in)      :: hconfig
 -- The following arguments require argument keyword syntax (e.g. rc=rc). --
     integer,            intent(out), optional :: rc
```

DESCRIPTION:

Return an iterator that points to one past the last item in `hconfig`.

The arguments are:

hconfig `ESMF_HConfig` or `ESMF_HConfigIter` object.

[rc] Return code; equals `ESMF_SUCCESS` if there are no errors.

49.6.37 ESMF_HConfigIterEndMapKey - Iterator at the end

INTERFACE:

```
function ESMF_HConfigIterEndMapKey(hconfig, rc)
```

RETURN VALUE:

```
type(ESMF_HConfigIter) :: ESMF_HConfigIterEndMapKey
```

ARGUMENTS:

```
     type(ESMF_HConfigIter), intent(in)        :: hconfig
 -- The following arguments require argument keyword syntax (e.g. rc=rc). --
     integer,            intent(out), optional :: rc
```

DESCRIPTION:

Return an iterator that points to one past the last item in `hconfig`.

The arguments are:

hconfig `ESMF_HConfigIter` object.

[rc] Return code; equals `ESMF_SUCCESS` if there are no errors.

49.6.38 ESMF_HConfigIterEndMapVal - Iterator at the end

INTERFACE:

```
function ESMF_HConfigIterEndMapVal(hconfig, rc)
```

RETURN VALUE:

```
type(ESMF_HConfigIter) :: ESMF_HConfigIterEndMapVal
```

ARGUMENTS:

```
     type(ESMF_HConfigIter), intent(in)        :: hconfig
 -- The following arguments require argument keyword syntax (e.g. rc=rc). --
     integer,            intent(out), optional :: rc
```

DESCRIPTION:

Return an iterator that points to one past the last item in `hconfig`.

The arguments are:

hconfig `ESMF_HConfigIter` object.

[rc] Return code; equals `ESMF_SUCCESS` if there are no errors.

49.6.39 ESMF_HConfigIterIsMap - Check whether HConfig iterator is Map

INTERFACE:

```
function ESMF_HConfigIterIsMap(hconfig, rc)
```

RETURN VALUE:

```
logical :: ESMF_HConfigIterIsMap
```

ARGUMENTS:

```
    type(ESMF_HConfigIter), intent(in)        :: hconfig
 -- The following arguments require argument keyword syntax (e.g. rc=rc). --
    integer,            intent(out), optional :: rc
```

DESCRIPTION:

Return `.true.` if the `hconfig` node is Null. Otherwise return `.false.`. If an error occurs, i.e. `rc /= ESMF_SUCCESS` is returned, the return value of the function will also be `.false.`.

The arguments are:

hconfig `ESMF_HConfigIter` object.

[rc] Return code; equals `ESMF_SUCCESS` if there are no errors.

49.6.40 ESMF_HConfigIterIsSequence - Check whether HConfig iterator is Sequence

INTERFACE:

```
function ESMF_HConfigIterIsSequence(hconfig, rc)
```

RETURN VALUE:

```
logical :: ESMF_HConfigIterIsSequence
```

ARGUMENTS:

```
    type(ESMF_HConfigIter), intent(in)        :: hconfig
 -- The following arguments require argument keyword syntax (e.g. rc=rc). --
    integer,            intent(out), optional :: rc
```

DESCRIPTION:

Return `.true.` if the `hconfig` node is Null. Otherwise return `.false.`. If an error occurs, i.e. `rc /= ESMF_SUCCESS` is returned, the return value of the function will also be `.false.`.

The arguments are:

hconfig `ESMF_HConfigIter` object.

[rc] Return code; equals `ESMF_SUCCESS` if there are no errors.

49.6.41 ESMF_HConfigIterLoop - Step iterator forward

INTERFACE:

```
function ESMF_HConfigIterLoop(hconfig, hconfigBegin, hconfigEnd, rc)
```

RETURN VALUE:

```
logical :: ESMF_HConfigIterLoop
```

ARGUMENTS:

```
     type(ESMF_HConfigIter), intent(inout)     :: hconfig
     type(ESMF_HConfigIter), intent(in)        :: hconfigBegin
     type(ESMF_HConfigIter), intent(in)        :: hconfigEnd
 -- The following arguments require argument keyword syntax (e.g. rc=rc). --
     integer,            intent(out), optional :: rc
```

DESCRIPTION:

Step the iterator `hconfig` forward. starting at `hconfigBegin` until `hconfigEnd` is reached. Returns `.true.` as long as `hconfig` has not reached `hconfigEnd`. Once this condition has been reached, returns `.false.`.

The intended usage of `ESMF_HConfigIterLoop()` is as the conditional in a `do while` loop, iterating over the elements of a HConfig object.

The arguments are:

hconfig The `ESMF_HConfigIter` object. Must enter equal to `hconfigBegin` on the first loop step.

hconfigBegin The `ESMF_HConfigIter` to begin at.

hconfigEnd The `ESMF_HConfigIter` that marks the end of the loop.

[rc] Return code; equals `ESMF_SUCCESS` if there are no errors.

49.6.42 ESMF_HConfigIterNext - Step iterator forward

INTERFACE:

```
subroutine ESMF_HConfigIterNext(hconfig, rc)
```

ARGUMENTS:

```
     type(ESMF_HConfigIter), intent(inout)         :: hconfig
 -- The following arguments require argument keyword syntax (e.g. rc=rc). --
     integer,            intent(out), optional :: rc
```

DESCRIPTION:

Step the iterator `hconfig` one step forward.

The arguments are:

hconfig `ESMF_HConfigIter` object.

[rc] Return code; equals `ESMF_SUCCESS` if there are no errors.

49.6.43 ESMF_HConfigLog - Log HConfig contents

INTERFACE:

```
subroutine ESMF_HConfigLog(hconfig, prefix, logMsgFlag, doc, rc)
```

ARGUMENTS:

```
     type(ESMF_HConfig),     intent(in)            :: hconfig
 -- The following arguments require argument keyword syntax (e.g. rc=rc). --
     character(len=*),       intent(in),  optional :: prefix
     type(ESMF_LogMsg_Flag), intent(in),  optional :: logMsgFlag
     integer,                intent(in),  optional :: doc
     integer,                intent(out), optional :: rc
```

DESCRIPTION:

Write the contents of `hconfig` to the ESMF default Log.

The arguments are:

hconfig `ESMF_HConfig` object written to log.

[prefix] String to prefix the log message. Default is no prefix.

[logMsgFlag] Type of log message generated. See section 50.2.3 for a list of valid message types. Default is `ESMF_LOGMSG_INFO`.

[doc] The doc index. If specified, only content of the indicated single document is written to log. Defaults to *all* docs.

[rc] Return code; equals `ESMF_SUCCESS` if there are no errors.

49.6.44 ESMF_HConfigMatch - Check if two HConfig objects match

INTERFACE:

```
function ESMF_HConfigMatch(hconfig1, hconfig2, rc)
```

RETURN VALUE:

```
type(ESMF_HConfigMatch_Flag) :: ESMF_HConfigMatch
```

ARGUMENTS:

```
     type(ESMF_HConfig),  intent(in)             :: hconfig1
     type(ESMF_HConfig),  intent(in)             :: hconfig2
 -- The following arguments require argument keyword syntax (e.g. rc=rc). --
     integer,              intent(out), optional :: rc
```

DESCRIPTION:

Determine the level to which `hconfig1` and `hconfig2` match.

Returns a value of type `ESMF_HConfigMatch_Flag`, indicating how closely the two HConfig objects match. For a description of the possible return values, see 49.2.1. Note that this call only performs PET local matching. Different match values may be returned on different PETs for the same HConfig pair.

The arguments are:

hconfig1 `ESMF_HConfig` object.

hconfig2 `ESMF_HConfig` object.

[rc] Return code; equals `ESMF_SUCCESS` if there are no errors.

49.6.45 ESMF_HConfigRemove - Remove element from HConfig object

INTERFACE:

```
subroutine ESMF_HConfigRemove(hconfig, index, keyString, rc)
```

ARGUMENTS:

```
      type(ESMF_HConfig[Iter]), intent(in)      :: hconfigIter
 -- The following arguments require argument keyword syntax (e.g. rc=rc). --
      integer,            intent(in),  optional :: index
      character(*),       intent(in),  optional :: keyString
      integer,            intent(out), optional :: rc
```

DESCRIPTION:

Remove an element from a squence or map HConfig object. Either `index` (for sequence) or `keyString` (for map) must be provided. An error is flagged if neither optional argument is specified.

The arguments are:

hconfig `ESMF_HConfig` object.

[index] Attempt to access by index if specified. Requires `hconfig` of NodeType Sequence. Muturally exclusive with `keyString`.

[keyString] Attempt to access by key string if specified. Requires `hconfig` of NodeType Map. Muturally exclusive with `index`.

[rc] Return code; equals `ESMF_SUCCESS` if there are no errors.

49.6.46 ESMF_HConfigSet - Set <Type> content in HConfig object

INTERFACE:

```
    subroutine ESMF_HConfigSet(hconfig, content, &
      index, keyString, doc, rc)
```

ARGUMENTS:

```
      type(ESMF_HConfig[Iter]), intent(inout)   :: hconfig
      <Type>,             intent(in)            :: content[(:)]
 -- The following arguments require argument keyword syntax (e.g. rc=rc). --
      integer,            intent(in),  optional :: index
      character(*),       intent(in),  optional :: keyString
      integer,            intent(in),  optional :: doc
      integer,            intent(out), optional :: rc
```

DESCRIPTION:

Set the content of type <Type> to `hconfig`, at the current location, or as specified by `index` or `keyString` (mutually exclusive!). Most <Type> options support the sequence array variant `(:)` in addition to the scalar variant.

The supported <Type> options are:

- `type(HConfig)` (Scalar only variant! Only a single HConfig object can be provided.)

- integer(ESMF_KIND_I4)
- integer(ESMF_KIND_I8)
- logical
- real(ESMF_KIND_R4)
- real(ESMF_KIND_R8)
- character(*)

The arguments are:

hconfig ESMF_HConfig or ESMF_HConfigIter object.

content The content to be set.

[index] Attempt to access by index if specified. Requires hconfig of NodeType Sequence. Muturally exclusive with keyString.

[keyString] Attempt to access by key string if specified. Requires hconfig of NodeType Map. Muturally exclusive with index.

[doc] The doc index. Defaults to the first document.

[rc] Return code; equals ESMF_SUCCESS if there are no errors.

49.6.47 ESMF_HConfigSetMapKey - Set <Type> content in HConfig MapKey object

INTERFACE:

```
    subroutine ESMF_HConfigSetMapKey(hconfig, content, &
      index, keyString, doc, rc)
```

ARGUMENTS:

```
      type(ESMF_HConfigIter), intent(inout)     :: hconfig
      <Type>,             intent(in)            :: content[(:)]
 -- The following arguments require argument keyword syntax (e.g. rc=rc). --
      integer,            intent(in),  optional :: index
      character(*),       intent(in),  optional :: keyString
      integer,            intent(in),  optional :: doc
      integer,            intent(out), optional :: rc
```

DESCRIPTION:

Set the content of type <Type> to the hconfig map key, at the current location, or as specified by index or keyString (mutually exclusive!). Most <Type> options support the sequence array variant (:) in addition to the scalar variant.

The supported <Type> options are:

- `type(HConfig)` (Scalar only variant! Only a single HConfig object can be provided.)
- `integer(ESMF_KIND_I4)`
- `integer(ESMF_KIND_I8)`
- `logical`
- `real(ESMF_KIND_R4)`
- `real(ESMF_KIND_R8)`
- `character(*)`

The arguments are:

hconfig `ESMF_HConfig` or `ESMF_HConfigIter` object.

content The content to be set.

[index] Attempt to access by index if specified. Requires `hconfig` of NodeType Sequence. Muturally exclusive with `keyString`.

[keyString] Attempt to access by key string if specified. Requires `hconfig` of NodeType Map. Muturally exclusive with `index`.

[doc] The doc index. Defaults to the first document.

[rc] Return code; equals `ESMF_SUCCESS` if there are no errors.

49.6.48 ESMF_HConfigSetMapVal - Set <Type> content in HConfig MapVal object

INTERFACE:

```
    subroutine ESMF_HConfigSetMapVal(hconfig, content, &
      index, keyString, doc, rc)
```

ARGUMENTS:

```
      type(ESMF_HConfigIter), intent(inout)     :: hconfig
      <Type>,             intent(in)            :: content[(:)]
 -- The following arguments require argument keyword syntax (e.g. rc=rc). --
      integer,            intent(in),  optional :: index
      character(*),       intent(in),  optional :: keyString
      integer,            intent(in),  optional :: doc
      integer,            intent(out), optional :: rc
```

DESCRIPTION:

Set the content of type <Type> to the `hconfig` map value, at the current location, or as specified by `index` or `keyString` (mutually exclusive!). Most <Type> options support the sequence array variant `(:)` in addition to the scalar variant.

The supported <Type> options are:

- `type(HConfig)` (Scalar only variant! Only a single HConfig object can be provided.)
- `integer(ESMF_KIND_I4)`
- `integer(ESMF_KIND_I8)`
- `logical`
- `real(ESMF_KIND_R4)`
- `real(ESMF_KIND_R8)`
- `character(*)`

The arguments are:

hconfig `ESMF_HConfig` or `ESMF_HConfigIter` object.

content The content to be set.

[index] Attempt to access by index if specified. Requires `hconfig` of NodeType Sequence. Muturally exclusive with `keyString`.

[keyString] Attempt to access by key string if specified. Requires `hconfig` of NodeType Map. Muturally exclusive with `index`.

[doc] The doc index. Defaults to the first document.

[rc] Return code; equals `ESMF_SUCCESS` if there are no errors.

49.6.49 ESMF_HConfigValidateMapKeys - Validate map keys against list of vocabulary

INTERFACE:

```
function ESMF_HConfigValidateMapKeys(hconfig, vocabulary, &
  badKey, rc)
```

RETURN VALUE:

```
logical :: ESMF_HConfigValidateMapKeys
```

ARGUMENTS:

```
     type(ESMF_HConfig),        intent(in)            :: hconfig
     character(len=*),          intent(in)            :: vocabulary(:)
 -- The following arguments require argument keyword syntax (e.g. rc=rc). --
     character(:), allocatable, intent(out), optional :: badKey
     integer,                   intent(out), optional :: rc
```

DESCRIPTION:

Validate that the *map* held in `hconfig` only uses *keys* that are listed in `vocabulary`.

The arguments are:

hconfig A map HConfig object.

vocabulary List of *keys* to validate against.

[badKey] If returning `.false.` with `ESMF_SUCCESS`, then `badKey` is set to the first *key* in `hconfig` that was *not* found in `vocabulary`.

[rc] Return code; equals `ESMF_SUCCESS` if there are no errors.

50 Log Class

50.1 Description

The Log class consists of a variety of methods for writing error, warning, and informational messages to files. A default Log is created at ESMF initialization. Other Logs can be created later in the code by the user. Most Log methods take a Log as an optional argument and apply to the default Log when another Log is not specified. A set of standard return codes and associated messages are provided for error handling.

Log provides capabilities to store message entries in a buffer, which is flushed to a file, either when the buffer is full, or when the user calls an `ESMF_LogFlush()` method. Currently, the default is for the Log to flush after every ten entries. This can easily be changed by using the `ESMF_LogSet()` method and setting the `maxElements` property to another value. The `ESMF_LogFlush()` method is automatically called when the program exits by any means (program completion, halt on error, or when the Log is closed).

The user has the capability to abort the program on conditions such as an error or on a warning by using the `ESMF_LogSet()` method with the `logmsgAbort` argument. For example if the `logmsgAbort` array is set to `(ESMF_LOGMSG_ERROR,ESMF_LOGMSG_WARNING)`, the program will stop on any and all warning or errors. When the `logmsgAbort` argument is set to `ESMF_LOGMSG_ERROR`, the program will only abort on errors. Lastly, the user can choose to never abort by using `ESMF_LOGMSG_NONE`; this is the default.

Log will automatically put the PET number into the Log. Also, the user can either specify `ESMF_LOGKIND_SINGLE` which writes all the entries to a single Log or `ESMF_LOGKIND_MULTI` which writes entries to multiple Logs according to the PET number. To distinguish Logs from each other when using `ESMF_LOGKIND_MULTI`, the PET number (in the format `PETx.`) will be prepended to the file name where x is the PET number.

Opening multiple log files and writing log messages from all the processors may affect the application performance while running on a large number of processors. For that reason, `ESMF_LOGKIND_NONE` is provided to switch off the Log capability. All the Log methods have no effect in the `ESMF_LOGKIND_NONE` mode.

A tracing capability may be enabled by setting the `trace` flag by using the `ESMF_LogSet()` method. When tracing is enabled, calls to methods such as `ESMF_LogFoundError`, `ESMF_LogFoundAllocError`, and `ESMF_LogFoundDeallocError` are logged in the default log file. This can result in voluminous output. It is typically used only around areas of code which are being debugged.

Other options that are planned for Log are to adjust the verbosity of output, and to optionally write to `stdout` instead of file(s).

50.2 Constants

50.2.1 ESMF_LOGERR

The valid values are:

ESMF_LOGERR_PASSTHRU A named character constant, with a predefined generic error message, that can be used for the `msg` argument in any `ESMF_Log` routine. The message indicated by this named constant is "*Passing error in return code*."

50.2.2 ESMF_LOGKIND

DESCRIPTION:
Specifies a single log file, multiple log files (one per PET), or no log files.

The type of this flag is:

`type(ESMF_LogKind_Flag)`

The valid values are:

ESMF_LOGKIND_SINGLE Use a single log file, combining messages from all of the PETs. Not supported on some platforms.

ESMF_LOGKIND_MULTI Use multiple log files — one per PET.

ESMF_LOGKIND_MULTI_ON_ERROR Use multiple log files — one per PET. A log file is only opened when a message of type `ESMF_LOGMSG_ERROR` is encountered.

ESMF_LOGKIND_NONE Do not issue messages to a log file.

50.2.3 ESMF_LOGMSG

DESCRIPTION:

Specifies a message level

The type of this flag is:

`type(ESMF_LogMsg_Flag)`

The valid values are:

ESMF_LOGMSG_INFO Informational messages

ESMF_LOGMSG_WARNING Warning messages

ESMF_LOGMSG_ERROR Error messages

ESMF_LOGMSG_TRACE Trace messages

ESMF_LOGMSG_DEBUG DEBUG messages

ESMF_LOGMSG_JSON JSON format messages

Valid predefined named array constant values are:

ESMF_LOGMSG_ALL All messages

ESMF_LOGMSG_NONE No messages

ESMF_LOGMSG_NOTRACE All messages EXCEPT trace messages

50.3 Use and Examples

By default ESMF_Initialize() opens a default Log in ESMF_LOGKIND_MULTI mode. ESMF handles the initialization and finalization of the default Log so the user can immediately start using it. If additional Log objects are desired, they must be explicitly created or opened using ESMF_LogOpen().

ESMF_LogOpen() requires a Log object and filename argument. Additionally, the user can specify single or multi Logs by setting the logkindflag property to ESMF_LOGKIND_SINGLE or ESMF_LOGKIND_MULTI. This is useful as the PET numbers are automatically added to the Log entries. A single Log will put all entries, regardless of PET number, into a single log while a multi Log will create multiple Logs with the PET number prepended to the filename and all entries will be written to their corresponding Log by their PET number.

By default, the Log file is not truncated at the start of a new run; it just gets appended each time. Future functionality may include an option to either truncate or append to the Log file.

In all cases where a Log is opened, a Fortran unit number is assigned to a specific Log. A Log is assigned an unused unit number using the algorithm described in the ESMF_IOUnitGet() method.

The user can then set or get options on how the Log should be used with the ESMF_LogSet() and ESMF_LogGet() methods. These are partially implemented at this time.

Depending on how the options are set, ESMF_LogWrite() either writes user messages directly to a Log file or writes to a buffer that can be flushed when full or by using the ESMF_LogFlush() method. The default is to flush after every ten entries because maxElements is initialized to ten (which means the buffer reaches its full state after every ten writes and then flushes).

A message filtering option may be set with ESMF_LogSet() so that only selected message types are actually written to the log. One key use of this feature is to allow placing informational log write requests into the code for debugging or tracing. Then, when the informational entries are not needed, the messages at that level may be turned off — leaving only warning and error messages in the logs.

For every ESMF_LogWrite(), a time and date stamp is prepended to the Log entry. The time is given in microsecond precision. The user can call other methods to write to the Log. In every case, all methods eventually make a call implicitly to ESMF_LogWrite() even though the user may never explicitly call it.

When calling ESMF_LogWrite(), the user can supply an optional line, file and method. These arguments can be passed in explicitly or with the help of cpp macros. In the latter case, a define for an ESMF_FILENAME must be placed at the beginning of a file and a define for ESMF_METHOD must be placed at the beginning of each method. The user can then use the ESMF_CONTEXT cpp macro in place of line, file and method to insert the parameters into the method. The user does not have to specify line number as it is a value supplied by cpp.

An example of Log output is given below running with logkindflag property set to ESMF_LOGKIND_MULTI (default) using the default Log:

(Log file PET0.ESMF_LogFile)

```
20041105 163418.472210 INFO      PET0     Running with ESMF Version 2.2.1
```

(Log file PET1.ESMF_LogFile)

```
20041105 163419.186153 ERROR     PET1     ESMF_Field.F90             812
ESMF_FieldGet No Grid or Bad Grid attached to Field
```

The first entry shows date and time stamp. The time is given in microsecond precision. The next item shown is the type of message (INFO in this case). Next, the PET number is added. Lastly, the content is written.

The second entry shows something slightly different. In this case, we have an ERROR. The method name (ESMF_Field.F90) is automatically provided from the cpp macros as well as the line number (812). Then the content of the message is written.

When done writing messages, the default Log is closed by calling `ESMF_LogFinalize()` or `ESMF_LogClose()` for user created Logs. Both methods will release the assigned unit number.

```
! !PROGRAM: ESMF_LogErrEx - Log Error examples
!
! !DESCRIPTION:
!
! This program shows examples of Log Error writing
!-----------------------------------------------------------------------------


! Macros for cpp usage
! File define
#define ESMF_FILENAME "ESMF_LogErrEx.F90"
! Method define
#define ESMF_METHOD "program ESMF_LogErrEx"
#include "ESMF_LogMacros.inc"

    ! ESMF Framework module
    use ESMF
    use ESMF_TestMod
    implicit none

    ! return variables
    integer :: rc1, rc2, rc3, rcToTest, allocRcToTest, result
    type(ESMF_LOG) :: alog  ! a log object that is not the default log
    type(ESMF_LogKind_Flag) :: logkindflag
    type(ESMF_Time) :: time
    type(ESMF_VM) :: vm
    integer, pointer :: intptr(:)
```

50.3.1 Default Log

This example shows how to use the default Log. This example does not use cpp macros but does use multi Logs. A separate Log will be created for each PET.

```
    ! Initialize ESMF to initialize the default Log
    call ESMF_Initialize(vm=vm, defaultlogfilename="LogErrEx.Log", &
                    logkindflag=ESMF_LOGKIND_MULTI, rc=rc1)



    ! LogWrite
    call ESMF_LogWrite("Log Write 2", ESMF_LOGMSG_INFO, rc=rc2)

    ! LogMsgSetError
    call ESMF_LogSetError(ESMF_RC_OBJ_BAD, msg="Convergence failure", &
                            rcToReturn=rc2)

    ! LogMsgFoundError
```

```
    call ESMF_TimeSet(time, calkindflag=ESMF_CALKIND_NOCALENDAR)
    call ESMF_TimeSyncToRealTime(time, rc=rcToTest)
    if (ESMF_LogFoundError(rcToTest, msg="getting wall clock time", &
                           rcToReturn=rc2)) then
        ! Error getting time. The previous call will have printed the error
        ! already into the log file.  Add any additional error handling here.
        ! (This call is expected to provoke an error from the Time Manager.)
    endif

    ! LogMsgFoundAllocError
    allocate(intptr(10), stat=allocRcToTest)
    if (ESMF_LogFoundAllocError(allocRcToTest, msg="integer array", &
                                rcToReturn=rc2)) then
        ! Error during allocation.  The previous call will have logged already
        ! an error message into the log.
    endif
    deallocate(intptr)
```

50.3.2 User created Log

This example shows how to use a user created Log. This example uses cpp macros.

```
    ! Open a Log named "Testlog.txt" associated with alog.
    call ESMF_LogOpen(alog, "TestLog.txt", rc=rc1)


%/////////////////////////////////////////////////////////////

 \begin{verbatim}
    ! LogWrite
    call ESMF_LogWrite("Log Write 2", ESMF_LOGMSG_INFO, &
                       line=__LINE__, file=ESMF_FILENAME, &
                       method=ESMF_METHOD, log=alog, rc=rc2)

    ! LogMsgSetError
    call ESMF_LogSetError(ESMF_RC_OBJ_BAD,  msg="Interpolation Failure", &
                          line=__LINE__, file=ESMF_FILENAME, &
                           method=ESMF_METHOD, rcToReturn=rc2, log=alog)
```

50.3.3 Get and Set

This example shows how to use Get and Set routines, on both the default Log and the user created Log from the previous examples.

```
    ! This is an example showing a query of the default Log.  Please note that
    ! no Log is passed in the argument list, so the default Log will be used.
    call ESMF_LogGet(logkindflag=logkindflag, rc=rc3)

    ! This is an example setting a property of a Log that is not the default.
    ! It was opened in a previous example, and the handle for it must be
    ! passed in the argument list.
    call ESMF_LogSet(log=alog, logmsgAbort=(/ESMF_LOGMSG_ERROR/), rc=rc2)
```

```
! Close the user log.
call ESMF_LogClose(alog, rc=rc3)

! Finalize ESMF to close the default log
call ESMF_Finalize(rc=rc1)
```

50.4 Restrictions and Future Work

1. **Line, file and method are only available when using the C preprocessor** Message writing methods are expanded using the ESMF macro ESMF_CONTEXT that adds the predefined symbolic constants __LINE__ and __FILE__ (or the ESMF constant ESMF_FILENAME if defined) and the ESMF constant ESMF_METHOD to the argument list. Using these constants, we can associate a file name, line number and method name with the message. If the CPP preprocessor is not used, this expansion will not be done and hence the ESMF macro ESMF_CONTEXT can not be used, leaving the file name, line number and method out of the Log text.

2. **Get and set methods are partially implemented.** Currently, the `ESMF_LogGet()` and `ESMF_LogSet()` methods are partially implemented.

3. **Log only appends entries.** All writing to the Log is appended rather than overwriting the Log. Future enhancements include the option to either append to an existing Log or overwrite the existing Log.

4. **Avoiding conflicts with the default Log.**

   The private methods `ESMF_LogInitialize()` and `ESMF_LogFinalize()` are called during `ESMF_Initialize()` and `ESMF_Finalize()` respectively, so they do not need to be called if the default Log is used. If a new Log is required, `ESMF_LogOpen()` is used with a new Log object passed in so that there are no conflicts with the default Log.

5. **ESMF_LOGKIND_SINGLE does not work properly.** When the `ESMF_LogKind_Flag` is set to `ESMF_LOGKIND_SINGLE`, different system may behave differently. The log messages from some processors may be lost or overwritten by other processors. Users are advised not to use this mode. The MPI-based I/O will be implemented to fix the problem in the future release.

50.5 Design and Implementation Notes

1. The Log class was implemented in Fortran and uses the Fortran I/O libraries when the class methods are called from Fortran. The C/C++ Log methods use the Fortran I/O library by calling utility functions that are written in Fortran. These utility functions call the standard Fortran write, open and close functions. At initialization an `ESMF_LOG` is created. The `ESMF_LOG` stores information for a specific Log file. When working with more than one Log file, multiple `ESMF_LOG`'s are required (one `ESMF_LOG` for each Log file). For each Log, a handle is returned through the `ESMF_LogInitialize` method for the default log or `ESMF_LogOpen` for a user created log. The user can specify single or multi logs by setting the `logkindflag` property in the `ESMF_LogInitialize` or `ESMF_Open` method to `ESMF_LOGKIND_SINGLE` or `ESMF_LOGKIND_MULTI`. Similarly, the user can set the `logkindflag` property for the default Log with the `ESMF_Initialize` method call. The `logkindflag` is useful as the PET numbers are automatically added to the log entries. A single log will put all entries, regardless of PET number, into a single log while a multi log will create multiple logs with the PET number prepended to the filename and all entries will be written to their corresponding log by their PET number.

   The properties for a Log are set with the `ESMF_LogSet()` method and retrieved with the `ESMF_LogGet()` method.

Additionally, buffering is enabled. Buffering allows `ESMF` to manage output data streams in a desired way. Writing to the buffer is transparent to the user because all the Log entries are handled automatically by the `ESMF_LogWrite()` method. All the user has to do is specify the buffer size (the default is ten) by setting the `maxElements` property. Every time the `ESMF_LogWrite()` method is called, a LogEntry element is populated with the `ESMF_LogWrite()` information. When the buffer is full (i.e., when all the LogEntry elements are populated), the buffer will be flushed and all the contents will be written to file. If buffering is not needed, that is `maxElements=1` or `flushImmediately=ESMF_TRUE`, the `ESMF_LogWrite()` method will immediately write to the Log file(s).

50.6 Object Model

The following is a simplified UML diagram showing the structure of the Log class. See Appendix A, *A Brief Introduction to UML*, for a translation table that lists the symbols in the diagram and their meaning.

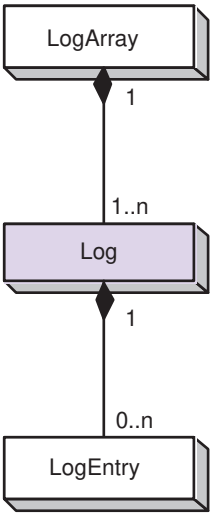

50.7 Class API

50.7.1 ESMF_LogAssignment(=) - Log assignment

INTERFACE:

```
interface assignment(=)
log1 = log2
```

ARGUMENTS:

```
type(ESMF_Log) :: log1
type(ESMF_Log) :: log2
```

DESCRIPTION:

Assign `log1` as an alias to the same `ESMF_Log` object in memory as `log2`. If `log2` is invalid, then `log1` will be equally invalid after the assignment.

The arguments are:

log1 The `ESMF_Log` object on the left hand side of the assignment.

log2 The `ESMF_Log` object on the right hand side of the assignment.

50.7.2 ESMF_LogOperator(==) - Test if Log 1 is equivalent to Log 2

INTERFACE:

```
interface operator(==)
if (log1 == log2) then ... endif
             OR
result = (log1 == log2)
```

RETURN VALUE:

```
logical :: result
```

ARGUMENTS:

```
type(ESMF_Log), intent(in) :: log1
type(ESMF_Log), intent(in) :: log2
```

DESCRIPTION:

Overloads the (==) operator for the `ESMF_Log` class. Compare two logs for equality; return `.true.` if equal, `.false.` otherwise. Comparison is based on whether the objects are distinct, as with two newly created logs, or are simply aliases to the same log as would be the case when assignment was involved.

The arguments are:

log1 The `ESMF_Log` object on the left hand side of the equality operation.

log2 The `ESMF_Log` object on the right hand side of the equality operation.

50.7.3 ESMF_LogOperator(/=) - Test if Log 1 is not equivalent to Log 2

INTERFACE:

```
interface operator(/=)
if (log1 /= log2) then ... endif
             OR
result = (log1 /= log2)
```

RETURN VALUE:

```
logical :: result
```

ARGUMENTS:

```
type(ESMF_Log), intent(in) :: log1
type(ESMF_Log), intent(in) :: log2
```

DESCRIPTION:

Overloads the (/=) operator for the `ESMF_Log` class. Compare two logs for inequality; return `.true.` if equal, `.false.` otherwise. Comparison is based on whether the objects are distinct, as with two newly created logs, or are simply aliases to the same log as would be the case when assignment was involved.

The arguments are:

log1 The `ESMF_Log` object on the left hand side of the non-equality operation.

log2 The `ESMF_Log` object on the right hand side of the non-equality operation.

50.7.4 ESMF_LogClose - Close Log file(s)

INTERFACE:

```
subroutine ESMF_LogClose(log, rc)
```

ARGUMENTS:

```
      type(ESMF_Log), intent(inout), optional :: log
 -- The following arguments require argument keyword syntax (e.g. rc=rc). --
      integer,        intent(out), optional :: rc
```

STATUS:

- This interface is backward compatible with ESMF versions starting at 5.2.0r. If code using this interface compiles with any version of ESMF starting with 5.2.0r, then it will compile with the current version.

DESCRIPTION:

This routine closes the log file(s) associated with `log`. If the log is not explicitly closed, it will be closed by `ESMF_Finalize`.

The arguments are:

[log] An `ESMF_Log` object. If not specified, the default log is closed.

[rc] Return code; equals `ESMF_SUCCESS` if there are no errors.

50.7.5 ESMF_LogFlush - Flush the Log file(s)

INTERFACE:

```
      subroutine ESMF_LogFlush(log, rc)
```

ARGUMENTS:

```
      type(ESMF_Log), intent(inout), optional :: log
 -- The following arguments require argument keyword syntax (e.g. rc=rc). --
      integer,        intent(out),   optional :: rc
```

STATUS:

- This interface is backward compatible with ESMF versions starting at 5.2.0r. If code using this interface compiles with any version of ESMF starting with 5.2.0r, then it will compile with the current version.

DESCRIPTION:

This subroutine flushes the file buffer associated with `log`.

The arguments are:

[log] An optional `ESMF_Log` object that can be used instead of the default Log.

[rc] Return code; equals `ESMF_SUCCESS` if there are no errors.

50.7.6 ESMF_LogFoundAllocError - Check Fortran allocation status error and write message

INTERFACE:

```
      function ESMF_LogFoundAllocError(statusToCheck,  &
                                       msg,line,file, &
                                       method,rcToReturn,log)
```

RETURN VALUE:

```
      logical                                     :: ESMF_LogFoundAllocError
```

ARGUMENTS:

```
      integer,          intent(in)              :: statusToCheck
 -- The following arguments require argument keyword syntax (e.g. rc=rc). --
      character(len=*), intent(in),    optional :: msg
      integer,          intent(in),    optional :: line
      character(len=*), intent(in),    optional :: file
      character(len=*), intent(in),    optional :: method
      integer,          intent(inout), optional :: rcToReturn
      type(ESMF_Log),   intent(inout), optional :: log
```

STATUS:

- This interface is backward compatible with ESMF versions starting at 5.2.0r. If code using this interface compiles with any version of ESMF starting with 5.2.0r, then it will compile with the current version.

DESCRIPTION:

This function returns `.true.` when `statusToCheck` indicates an allocation error, otherwise it returns `.false.`. The status value is typically returned from a Fortran ALLOCATE statement. If an error is indicated, a ESMF memory allocation error message will be written to the `ESMF_Log` along with a user added `msg`, `line`, `file` and `method`.

The arguments are:

statusToCheck Fortran allocation status to check. Fortran specifies that a status of 0 (zero) indicates success.

[msg] User-provided message string.

[line] Integer source line number. Expected to be set by using the preprocessor `__LINE__` macro.

[file] User-provided source file name.

[method] User-provided method string.

[rcToReturn] If specified, when the allocation status indicates an error, set the `rcToReturn` value to `ESMF_RC_MEM`. Otherwise, `rcToReturn` is not modified.

[log] An optional `ESMF_Log` object that can be used instead of the default Log.

50.7.7 ESMF_LogFoundDeallocError - Check Fortran deallocation status error and write message

INTERFACE:

```
      function ESMF_LogFoundDeallocError(statusToCheck,  &
                                         msg,line,file, &
                                         method,rcToReturn,log)
```

RETURN VALUE:

```
      logical ::ESMF_LogFoundDeallocError
```

ARGUMENTS:

```
      integer,          intent(in)              :: statusToCheck
 -- The following arguments require argument keyword syntax (e.g. rc=rc). --
      character(len=*), intent(in),    optional :: msg
      integer,          intent(in),    optional :: line
      character(len=*), intent(in),    optional :: file
      character(len=*), intent(in),    optional :: method
      integer,          intent(inout), optional :: rcToReturn
      type(ESMF_Log),   intent(inout), optional :: log
```

STATUS:

- This interface is backward compatible with ESMF versions starting at 5.2.0r. If code using this interface compiles with any version of ESMF starting with 5.2.0r, then it will compile with the current version.

DESCRIPTION:

This function returns `.true.` when `statusToCheck` indicates a deallocation error, otherwise it returns `.false.`. The status value is typically returned from a Fortran DEALLOCATE statement. If an error is indicated, a ESMF memory allocation error message will be written to the `ESMF_Log` along with a user added `msg`, `line`, `file` and `method`.

The arguments are:

statusToCheck Fortran deallocation status to check. Fortran specifies that a status of 0 (zero) indicates success.

[msg] User-provided message string.

[line] Integer source line number. Expected to be set by using the preprocessor `__LINE__` macro.

[file] User-provided source file name.

[method] User-provided method string.

[rcToReturn] If specified, when the deallocation status indicates an error, set the `rcToReturn` value to `ESMF_RC_MEM`. Otherwise, `rcToReturn` is not modified.

[log] An optional `ESMF_Log` object that can be used instead of the default Log.

50.7.8 ESMF_LogFoundError - Check ESMF return code for error and write message

INTERFACE:

```
recursive function ESMF_LogFoundError(rcToCheck,   &
                                msg, line, file, method, &
                                rcToReturn, log) result (LogFoundError)
```

RETURN VALUE:

```
      logical :: LogFoundError
```

ARGUMENTS:

```
      integer,          intent(in),    optional :: rcToCheck
 -- The following arguments require argument keyword syntax (e.g. rc=rc). --
      character(len=*), intent(in),    optional :: msg
      integer,          intent(in),    optional :: line
      character(len=*), intent(in),    optional :: file
      character(len=*), intent(in),    optional :: method
      integer,          intent(inout), optional :: rcToReturn
      type(ESMF_Log),   intent(inout), optional :: log
```

STATUS:

- This interface is backward compatible with ESMF versions starting at 5.2.0r. If code using this interface compiles with any version of ESMF starting with 5.2.0r, then it will compile with the current version.

DESCRIPTION:

This function returns `.true.` when `rcToCheck` indicates an return code other than `ESMF_SUCCESS`, otherwise it returns `.false.`. If an error is indicated, a ESMF predefined error message will be written to the `ESMF_Log` along with a user added `msg`, `line`, `file` and `method`.

The arguments are:

[rcToCheck] Return code to check. Default is `ESMF_SUCCESS`.

[msg] User-provided message string.

[line] Integer source line number. Expected to be set by using the preprocessor `__LINE__` macro.

[file] User-provided source file name.

[method] User-provided method string.

[rcToReturn] If specified, when `rcToCheck` indicates an error, set the `rcToReturn` to the value of `rcToCheck`. Otherwise, `rcToReturn` is not modified. This is not the return code for this function; it allows the calling code to do an assignment of the error code at the same time it is testing the value.

[log] An optional `ESMF_Log` object that can be used instead of the default Log.

50.7.9 ESMF_LogFoundNetCDFError - Check NetCDF status code for success or log the associated NetCDF error message.

INTERFACE:

```
 function ESMF_LogFoundNetCDFError(ncerrToCheck, msg, line, &
                                   file, method, rcToReturn, log)
```

```
#if defined ESMF_NETCDF
  use netcdf
#elif defined ESMF_PNETCDF
  use pnetcdf
#endif
```

RETURN VALUE:

```
  logical :: ESMF_LogFoundNetCDFError
```

ARGUMENTS:

```
  integer,          intent(in)              :: ncerrToCheck
-- The following arguments require argument keyword syntax (e.g. rc=rc). --
  character(len=*), intent(in),    optional :: msg
  integer,          intent(in),    optional :: line
  character(len=*), intent(in),    optional :: file
  character(len=*), intent(in),    optional :: method
  integer,          intent(inout), optional :: rcToReturn
  type(ESMF_Log),   intent(inout), optional :: log
```

DESCRIPTION:

This function returns `.true.` when `ncerrToCheck` indicates an return code other than `0` (the success code from NetCDF Fortran) or `NF_NOERR` (the success code for PNetCDF). Otherwise it returns `.false.`. If an error is indicated, a predefined ESMF error message will be written to the `ESMF_Log` along with a user added `msg`, `line`, `file` and `method`. The NetCDF string error representation will also be logged.

The arguments are:

[ncerrToCheck] NetCDF error code to check.

[msg] User-provided message string.

[line] Integer source line number. Expected to be set by using the preprocessor `__LINE__` macro.

[file] User-provided source file name.

[method] User-provided method string.

[rcToReturn] If specified, when `ncerrToCheck` indicates an error, set `rcToReturn` to `ESMF_RC_NETCDF_ERROR`. The string representation for the error code will be retrieved from the NetCDF Fortran library and logged alongside any user-provided message string. Otherwise, `rcToReturn` is not modified. This is not the return code for this function; it allows the calling code to do an assignment of the error code at the same time it is testing the value.

[log] An optional `ESMF_Log` object that can be used instead of the default Log.

50.7.10 ESMF_LogGet - Return information about a log object

INTERFACE:

```
subroutine ESMF_LogGet(log,  &
                       flush,    &
                       logmsgAbort, logkindflag, &
                       maxElements, trace, fileName,  &
                       highResTimestampFlag, indentCount,  &
                       noPrefix, rc)
```

ARGUMENTS:

```
      type(ESMF_Log),          intent(in),  optional :: log
 -- The following arguments require argument keyword syntax (e.g. rc=rc). --
      logical,                 intent(out), optional :: flush
      type(ESMF_LogMsg_Flag),  pointer,     optional :: logmsgAbort(:)
      type(ESMF_LogKind_Flag), intent(out), optional :: logkindflag
      integer,                 intent(out), optional :: maxElements
      logical,                 intent(out), optional :: trace
      character(*),            intent(out), optional :: fileName
      logical,                 intent(out), optional :: highResTimestampFlag
      integer,                 intent(out), optional :: indentCount
      logical,                 intent(out), optional :: noPrefix
      integer,                 intent(out), optional :: rc
```

DESCRIPTION:

This subroutine returns properties about a Log object.

The arguments are:

[log] An optional `ESMF_Log` object that can be used instead of the default Log.

[flush] Flush flag.

[logmsgAbort] Returns an array containing current message halt settings. If the array is not pre-allocated, `ESMF_LogGet` will allocate an array of the correct size. If no message types are defined, an array of length zero is returned. It is the callers responsibility to deallocate the array.

[logkindflag] Defines either single or multilog.

[maxElements] Maximum number of elements in the Log.

[trace] Current setting of the Log call tracing flag.

[fileName] Current file name. When the log has been opened with `ESMF_LOGKIND_MULTI`, the filename has a PET number prefix.

[highResTimestampFlag] Current setting of the extended elapsed timestamp flag.

[indentCount] Current setting of the leading white space padding.

[noPrefix] Current setting of the message prefix enable/disable flag.

[rc] Return code; equals `ESMF_SUCCESS` if there are no errors.

50.7.11 ESMF_LogOpen - Open Log file(s)

INTERFACE:

```
     subroutine ESMF_LogOpen(log, filename,  &
         appendflag, logkindflag, noPrefix, rc)
```

ARGUMENTS:

```
     type(ESMF_Log),          intent(inout)         :: log
     character(len=*),        intent(in)            :: filename
 -- The following arguments require argument keyword syntax (e.g. rc=rc). --
     logical,                 intent(in),  optional :: appendFlag
     type(ESMF_LogKind_Flag), intent(in),  optional :: logkindFlag
     logical,                 intent(in),  optional :: noPrefix
     integer,                 intent(out), optional :: rc
```

DESCRIPTION:

This routine opens a file named `filename` and associates it with the `ESMF_Log`. When `logkindflag` is set to `ESMF_LOGKIND_MULTI` or `ESMF_LOGKIND_MULTI_ON_ERROR` the file name is prepended with PET number identification. If the incoming log is already open, an error is returned.

The arguments are:

log An `ESMF_Log` object.

filename Name of log file to be opened.

[appendFlag] If the log file exists, setting to `.false.` will set the file position to the beginning of the file. Otherwise, new records will be appended to the end of the file. If not specified, defaults to `.true.`.

[logkindFlag] Set the logkindflag. See section 50.2.2 for a list of valid options. When the `ESMF_LOGKIND_MULTI_ON_ERROR` is selected, the log opening is deferred until a `ESMF_LogWrite` with log message of type `ESMF_LOGMSG_ERROR` is written. If not specified, defaults to `ESMF_LOGKIND_MULTI`.

[noPrefix] Set the noPrefix flag. If set to `.false.`, log messages are prefixed with time stamps, message type, and PET number. If set to `.true.` the messages will be written without prefixes. If not specified, defaults to `.false.`.

[rc] Return code; equals `ESMF_SUCCESS` if there are no errors.

50.7.12 ESMF_LogOpen - Open Default Log file(s)

INTERFACE:

```
   ! Private name; call using ESMF_LogOpen ()
     subroutine ESMF_LogOpenDefault (filename,  &
         appendflag, logkindflag, rc)
```

ARGUMENTS:

```
     character(len=*),        intent(in)            :: filename
 -- The following arguments require argument keyword syntax (e.g. rc=rc). --
     logical,                 intent(in),  optional :: appendflag
     type(ESMF_LogKind_Flag), intent(in),  optional :: logkindflag
     integer,                 intent(out), optional :: rc
```

DESCRIPTION:

This routine opens a file named `filename` and associates it with the default log. When `logkindflag` is set to `ESMF_LOGKIND_MULTI` the file name is prepended with PET number identification. If the incoming default log is already open, an error is returned.

The arguments are:

filename Name of DEFAULT log file to be opened.

[appendflag] If the log file exists, setting to `.false.` will set the file position to the beginning of the file. Otherwise, new records will be appended to the end of the file. If not specified, defaults to `.true.`.

[logkindflag] Set the logkindflag. See section 50.2.2 for a list of valid options. If not specified, defaults to `ESMF_LOGKIND_MULTI`.

[rc] Return code; equals `ESMF_SUCCESS` if there are no errors.

50.7.13 ESMF_LogSet - Set Log parameters

INTERFACE:

```
     subroutine ESMF_LogSet(log,  &
         flush,  &
         logmsgAbort, maxElements, logmsgList,  &
         errorMask, trace, highResTimestampFlag, indentCount,  &
         noPrefix, rc)
```

ARGUMENTS:

```
       type(ESMF_Log),          intent(inout), optional :: log
 -- The following arguments require argument keyword syntax (e.g. rc=rc). --
       logical,                 intent(in),    optional :: flush
       type(ESMF_LogMsg_Flag),  intent(in),    optional :: logmsgAbort(:)
       integer,                 intent(in),    optional :: maxElements
       type(ESMF_LogMsg_Flag),  intent(in),    optional :: logmsgList(:)
       integer,                 intent(in),    optional :: errorMask(:)
       logical,                 intent(in),    optional :: trace
       logical,                 intent(in),    optional :: highResTimestampFlag
       integer,                 intent(in),    optional :: indentCount
       logical,                 intent(in),    optional :: noPrefix
       integer,                 intent(out),   optional :: rc
```

DESCRIPTION:

This subroutine sets the properties for the Log object.

The arguments are:

[log] An optional `ESMF_Log` object. The default is to use the default log that was opened at `ESMF_Initialize` time.

[flush] If set to `.true.`, flush log messages immediately, rather than buffering them. Default is to flush after `maxElements` messages.

[logmsgAbort] Sets the condition on which ESMF aborts. The array can contain any combination of `ESMF_LOGMSG` named constants. These named constants are described in section 50.2.3. Default is to always continue processing.

[maxElements] Maximum number of elements in the Log buffer before flushing occurs. Default is to flush when 10 messages have been accumulated.

[logmsgList] An array of message types that will be logged. Log write requests not matching the list will be ignored. If an empty array is provided, no messages will be logged. See section 50.2.3 for a list of valid message types. By default, all non-trace messages will be logged.

[errorMask] List of error codes that will *not* be logged as errors. Default is to log all error codes.

[trace] If set to `.true.`, calls such as `ESMF_LogFoundError()`, `ESMF_LogFoundAllocError()`, and `ESMF_LogFoundDeallocError()` will be logged in the default log files. This option is intended to be used as a tool for debugging and program flow tracing within the ESMF library. Voluminous output may appear in the log, with a consequent slowdown in performance. Therefore, it is recommended that this option only be enabled before a problematic call to a ESMF method, and disabled afterwards. Default is to not trace these calls.

[highResTimestampFlag] Sets the extended elapsed timestamp flag. If set to `.true.`, a timestamp from `ESMF_VMWtime` will be included in each log message. Default is to not add the additional timestamps.

[indentCount] Number of leading white spaces.

[noPrefix] If set to `.false.`, log messages are prefixed with time stamps, message type and PET number. If set to `.true.` the messages will be written without the prefixes.

[rc] Return code; equals `ESMF_SUCCESS` if there are no errors.

50.7.14 ESMF_LogSetError - Set ESMF return code for error and write msg

INTERFACE:

```
subroutine ESMF_LogSetError(rcToCheck,  &
                            msg, line, file, method, &
                            rcToReturn, log)
```

ARGUMENTS:

```
      integer,          intent(in)              :: rcToCheck
 -- The following arguments require argument keyword syntax (e.g. rc=rc). --
      character(len=*), intent(in),    optional :: msg
      integer,          intent(in),    optional :: line
      character(len=*), intent(in),    optional :: file
      character(len=*), intent(in),    optional :: method
      integer,          intent(out),   optional :: rcToReturn
      type(ESMF_Log),   intent(inout), optional :: log
```

STATUS:

- This interface is backward compatible with ESMF versions starting at 5.2.0r. If code using this interface compiles with any version of ESMF starting with 5.2.0r, then it will compile with the current version.

DESCRIPTION:

This subroutine sets the `rcToReturn` value to `rcToCheck` if `rcToReturn` is present and writes this error code to the `ESMF_Log` if an error is generated. A predefined error message will added to the `ESMF_Log` along with a user added `msg`, `line`, `file` and `method`.

The arguments are:

rcToCheck rc value for set

[msg] User-provided message string.

[line] Integer source line number. Expected to be set by using the preprocessor macro `__LINE__` macro.

[file] User-provided source file name.

[method] User-provided method string.

[rcToReturn] If specified, copy the `rcToCheck` value to `rcToreturn`. This is not the return code for this function; it allows the calling code to do an assignment of the error code at the same time it is testing the value.

[log] An optional `ESMF_Log` object that can be used instead of the default Log.

50.7.15 ESMF_LogWrite - Write to Log file(s)

INTERFACE:

```
      recursive subroutine ESMF_LogWrite(msg, logmsgFlag, &
                         logmsgList,      & ! DEPRECATED ARGUMENT
                         line, file, method, log, rc)
```

ARGUMENTS:

```
      character(len=*),      intent(in)             :: msg
      type(ESMF_LogMsg_Flag),intent(in),optional    :: logmsgFlag
      type(ESMF_LogMsg_Flag),intent(in),optional::logmsgList ! DEPRECATED ARG
```

```
-- The following arguments require argument keyword syntax (e.g. rc=rc). --
      integer,                intent(in),   optional :: line
      character(len=*),       intent(in),   optional :: file
      character(len=*),       intent(in),   optional :: method
      type(ESMF_Log),         intent(inout),optional :: log
      integer,                intent(out),  optional :: rc
```

STATUS:

- This interface is backward compatible with ESMF versions starting at 5.2.0r. If code using this interface compiles with any version of ESMF starting with 5.2.0r, then it will compile with the current version.
- This interface was modified since ESMF version 5.2.0r. The fact that code using this interface compiles with the current ESMF version does not guarantee that it compiles with previous versions of this interface. If user code compatibility with version 5.2.0r is desired then care must be taken to limit the use of this interface to features that were available in the 5.2.0r release.
  Changes made after the 5.2.0r release:

  5.2.0rp1 Added argument `logmsgFlag`. Started to deprecate argument `logmsgList`. This corrects inconsistent use of the `List` suffix on the argument name. In ESMF this suffix indicates one–dimensional array arguments.

DESCRIPTION:

This subroutine writes to the file associated with an `ESMF_Log`. A message is passed in along with the `logmsgFlag`, `line`, `file` and `method`. If the write to the `ESMF_Log` is successful, the function will return a logical `true`. This function is the base function used by all the other `ESMF_Log` writing methods.

The arguments are:

msg User-provided message string.

[logmsgFlag] The type of message. See Section 50.2.3 for possible values. If not specified, the default is `ESMF_LOGMSG_INFO`.

[logmsgList] **DEPRECATED ARGUMENT!** Please use the argument `logmsgFlag` instead.

[line] Integer source line number. Expected to be set by using the preprocessor macro `__LINE__` macro.

[file] User-provided source file name.

[method] User-provided method string.

[log] An optional `ESMF_Log` object that can be used instead of the default Log.

[rc] Return code; equals `ESMF_SUCCESS` if there are no errors.

51 DELayout Class

51.1 Description

The DELayout class provides an additional layer of abstraction on top of the Virtual Machine (VM) layer. DELayout does this by introducing DEs (Decomposition Elements) as logical resource units. The DELayout object keeps track of the relationship between its DEs and the resources of the associated VM object.

The relationship between DEs and VM resources (PETs (Persistent Execution Threads) and VASs (Virtual Address Spaces)) contained in a DELayout object is defined during its creation and cannot be changed thereafter. There are, however, a number of hint and specification arguments that can be used to shape the DELayout during its creation.

Contrary to the number of PETs and VASs contained in a VM object, which are fixed by the available resources, the number of DEs contained in a DELayout can be chosen freely to best match the computational problem or other design criteria. Creating a DELayout with less DEs than there are PETs in the associated VM object can be used to share resources between decomposed objects within an ESMF component. Creating a DELayout with more DEs than there are PETs in the associated VM object can be used to evenly partition the computation over the available resources.

The simplest case, however, is where the DELayout contains the same number of DEs as there are PETs in the associated VM context. In this case the DELayout may be used to re-label the hardware and operating system resources held by the VM. For instance, it is possible to order the resources so that specific DEs have best available communication paths. The DELayout will map the DEs to the PETs of the VM according to the resource details provided by the VM instance.

Furthermore, general DE to PET mapping can be used to offer computational resources with finer granularity than the VM does. The DELayout can be queried for computational and communication capacities of DEs and DE pairs, respectively. This information can be used to best utilize the DE resources when partitioning the computational problem. In combination with other ESMF classes, general DE to PET mapping can be used to realize cache blocking, communication hiding and dynamic load balancing.

Finally, the DELayout layer offers primitives that allow a work queue style dynamic load balancing between DEs.

51.2 Constants

51.2.1 ESMF_PIN

DESCRIPTION:
Specifies which VM resource DEs are pinned to (PETs, VASs, SSIs).

The type of this flag is:

`type(ESMF_Pin_Flag)`

The valid values are:

ESMF_PIN_DE_TO_PET Pin DEs to PETs. Only the owning PET has access to a DE.

ESMF_PIN_DE_TO_VAS Pin DEs to virtual address spaces (VAS). DEs are accessible from all PETs within the same VAS.

ESMF_PIN_DE_TO_SSI Pin DEs to single system images (SSI) - typically shared memory nodes. DEs are accessible from all PETs within the same SSI. The memory allocation between different DEs is allowed to be non-contiguous.

ESMF_PIN_DE_TO_SSI_CONTIG Same as `ESMF_PIN_DE_TO_SSI`, but the shared memory allocation across DEs located on the same SSI must be contigous throughout.

51.2.2 ESMF_SERVICEREPLY

DESCRIPTION:
Reply when a PET offers to service a DE.

The type of this flag is:

`type(ESMF_ServiceReply_Flag)`

The valid values are:

ESMF_SERVICEREPLY_ACCEPT The service offer has been accepted. The PET is expected to service the DE.

ESMF_SERVICEREPLY_DENY The service offer has been denied. The PET is expected to not service the DE.

51.3 Use and Examples

The following examples demonstrate how to create, use and destroy DELayout objects.

51.3.1 Default DELayout

Without specifying any of the optional parameters the created `ESMF_DELayout` defaults into having as many DEs as there are PETs in the associated VM object. Consequently the resulting DELayout describes a simple 1-to-1 DE to PET mapping.

```
delayout = ESMF_DELayoutCreate(rc=rc)
```

The default DE to PET mapping is simply:

```
DE 0  -> PET 0
DE 1  -> PET 1
...
```

DELayout objects that are not used any longer should be destroyed.

```
call ESMF_DELayoutDestroy(delayout, rc=rc)
```

The optional `vm` argument can be provided to DELayoutCreate() to lower the method's overhead by the amount it takes to determine the current VM.

```
delayout = ESMF_DELayoutCreate(vm=vm, rc=rc)
```

By default all PETs of the associated VM will be considered. However, if the optional argument `petList` is present DEs will only be mapped against the PETs contained in the list. When the following example is executed on four PETs it creates a DELayout with four DEs by default that are mapped to the provided PETs in their given order. It is erroneous to specify PETs that are not part of the VM context on which the DELayout is defined.

```
delayout = ESMF_DELayoutCreate(petList=(/(i,i=petCount-1,1,-1)/), rc=rc)
```

Once the end of the petList has been reached the DE to PET mapping continues from the beginning of the list. For a 4 PET VM the above created DELayout will end up with the following DE to PET mapping:

```
DE 0  -> PET 3
DE 1  -> PET 2
DE 2  -> PET 1
DE 2  -> PET 3
```

51.3.2 DELayout with specified number of DEs

The `deCount` argument can be used to specify the number of DEs. In this example a DELayout is created that contains four times as many DEs as there are PETs in the VM.

```
delayout = ESMF_DELayoutCreate(deCount=4*petCount, rc=rc)
```

Cyclic DE to PET mapping is the default. For 4 PETs this means:

```
 DE 0, 4,  8, 12  -> PET 0
 DE 1, 5,  9, 13  -> PET 1
 DE 2, 6, 10, 14  -> PET 2
 DE 3, 7, 11, 15  -> PET 3
```

The default DE to PET mapping can be overridden by providing the `deGrouping` argument. This argument provides a positive integer group number for each DE in the DELayout. All of the DEs of a group will be mapped against the same PET. The actual group index is arbitrary (but must be positive) and its value is of no consequence.

```
delayout = ESMF_DELayoutCreate(deCount=4*petCount, &
  deGrouping=(/(i/4,i=0,4*petCount-1)/), rc=rc)
```

This will achieve blocked DE to PET mapping. For 4 PETs this means:

```
 DE  0,  1,  2,  3  -> PET 0
 DE  4,  5,  6,  7  -> PET 1
 DE  8,  9, 10, 11  -> PET 2
 DE 12, 13, 14, 15  -> PET 3
```

51.3.3 DELayout with computational and communication weights

The quality of the partitioning expressed by the DE to PET mapping depends on the amount and quality of information provided during DELayout creation. In the following example the `compWeights` argument is used to specify relative computational weights for all DEs and communication weights for DE pairs are provided by the `commWeights` argument. The example assumes four DEs.

```
allocate(compWeights(4))
allocate(commWeights(4, 4))
! setup compWeights and commWeights according to computational problem
delayout = ESMF_DELayoutCreate(deCount=4, compWeights=compWeights, &
  commWeights=commWeights, rc=rc)
deallocate(compWeights, commWeights)
```

The resulting DE to PET mapping depends on the specifics of the VM object and the provided compWeights and commWeights arrays.

51.3.4 DELayout from petMap

Full control over the DE to PET mapping is provided via the `petMap` argument. This example maps the DEs to PETs in reverse order. In the 4-PET case this will result in the following mapping:

```
 DE 0 -> PET 3
 DE 1 -> PET 2
 DE 2 -> PET 1
 DE 3 -> PET 0
```

```
delayout = ESMF_DELayoutCreate(petMap=(/(i,i=petCount-1,0,-1)/), rc=rc)
```

51.3.5 DELayout from petMap with multiple DEs per PET

The `petMap` argument gives full control over DE to PET mapping. The following example run on 4 or more PETs maps DEs to PETs according to the following table:

```
 DE 0 -> PET 3
 DE 1 -> PET 3
 DE 2 -> PET 1
 DE 3 -> PET 0
 DE 4 -> PET 2
 DE 5 -> PET 1
 DE 6 -> PET 3
 DE 7 -> PET 1
```

```
delayout = ESMF_DELayoutCreate(petMap=(/3, 3, 1, 0, 2, 1, 3, 1/), rc=rc)
```

51.3.6 Working with a DELayout - simple 1-to-1 DE-to-PET mapping

The simplest case is a DELayout where there is exactly one DE for every PET. Of course this implies that the number of DEs equals the number of PETs. This special 1-to-1 DE-to-PET mapping is very common and many applications assume it. The following example shows how a DELayout can be queried about its mapping.

First a default DELayout is created where the number of DEs equals the number of PETs, and are associated 1-to-1.

```
delayout = ESMF_DELayoutCreate(rc=rc)
```

Next the DELayout is queried for the `oneToOneFlag`, and the user code makes a decision based on its value.

```
call ESMF_DELayoutGet(delayout, oneToOneFlag=oneToOneFlag, rc=rc)
if (rc /= ESMF_SUCCESS) call ESMF_Finalize(endflag=ESMF_END_ABORT)
if (.not. oneToOneFlag) then
  ! handle the unexpected case of not dealing with a 1-to-1 mapping
else
```

1-to-1 mapping is guaranteed in this branch and the following code can work under the simplifying assumption that every PET holds exactly one DE:

```
  allocate(localDeToDeMap(1))
  call ESMF_DELayoutGet(delayout, localDeToDeMap=localDeToDeMap, rc=rc)
  if (rc /= ESMF_SUCCESS) finalrc=rc
  myDe = localDeToDeMap(1)
  deallocate(localDeToDeMap)
  if (finalrc /= ESMF_SUCCESS) call ESMF_Finalize(endflag=ESMF_END_ABORT)
endif
```

51.3.7 Working with a DELayout - general DE-to-PET mapping

In general a DELayout may map any number (including zero) of DEs against a single PET. The exact situation can be detected by querying the DELayout for the `oneToOneFlag`. If this flag comes back as `.true.` then the DELayout maps exactly one DE against each PET, but if it comes back as `.false.` the DELayout describes a more general DE-to-PET layout. The following example shows how code can be be written to work for a general DELayout.

First a DELayout is created with two more DEs than there are PETs. The DELayout will consequently map some DEs to the same PET.

```
  delayout = ESMF_DELayoutCreate(deCount=petCount+2, rc=rc)
```

The first piece of information needed on each PET is the `localDeCount`. This number may be different on each PET and indicates how many DEs are mapped against the local PET.

```
  call ESMF_DELayoutGet(delayout, localDeCount=localDeCount, rc=rc)
```

The DELayout can further be queried for a list of DEs that are held by the local PET. This information is provided by the `localDeToDeMap` argument. In ESMF a `localDe` is an index that enumerates the DEs that are associated with the local PET. In many cases the exact bounds of the `localDe` index range, e.g. $[0...localDeCount-1]$, or $[1...localDeCount]$ does not matter, since it only affects how user code indexes into variables the user allocated, and therefore set the specific bounds. However, there are a few Array and Field level calls that take `localDe` input arguments. In all those cases where the `localDe` index variable is passed into an ESMF call as an input argument, it *must* be defined with a range starting at zero, i.e. $[0...localDeCount-1]$.

For consistency with Array and Field, the following code uses a $[0...localDeCount-1]$ range for the `localDe` index variable, although it is not strictly necessary here:

```
  allocate(localDeToDeMap(0:localDeCount-1))
  call ESMF_DELayoutGet(delayout, localDeToDeMap=localDeToDeMap, rc=rc)
  if (rc /= ESMF_SUCCESS) finalrc=rc
  do localDe=0, localDeCount-1
    workDe = localDeToDeMap(localDe)
!    print *, "I am PET", localPET, " and I am working on DE ", workDe
  enddo
  deallocate(localDeToDeMap)
  if (finalrc /= ESMF_SUCCESS) call ESMF_Finalize(endflag=ESMF_END_ABORT)
```

51.3.8 Work queue dynamic load balancing

The DELayout API includes two calls that can be used to easily implement work queue dynamic load balancing. The workload is broken up into DEs (more than there are PETs) and processed by the PETs. Load balancing is only possible for ESMF multi-threaded VMs and requires that DEs are pinned to VASs instead of the PETs (default). The following example will run for any VM and DELayout, however, load balancing will only occur under the mentioned conditions.

```
  delayout = ESMF_DELayoutCreate(deCount=petCount+2, &
    pinflag=ESMF_PIN_DE_TO_VAS, rc=rc)

  call ESMF_DELayoutGet(delayout, vasLocalDeCount=localDeCount, rc=rc)
  if (rc /= ESMF_SUCCESS) finalrc=rc
  allocate(localDeToDeMap(localDeCount))
```

```
call ESMF_DELayoutGet(delayout, vasLocalDeToDeMap=localDeToDeMap, rc=rc)
if (rc /= ESMF_SUCCESS) finalrc=rc
do i=1, localDeCount
  workDe = localDeToDeMap(i)
  print *, "I am PET", localPET, &
           " and I am offering service for DE ", workDe
  reply = ESMF_DELayoutServiceOffer(delayout, de=workDe, rc=rc)
  if (rc /= ESMF_SUCCESS) finalrc=rc
  if (reply == ESMF_SERVICEREPLY_ACCEPT) then
    ! process work associated with workDe
    print *, "I am PET", localPET, ", service offer for DE ", workDe, &
      " was accepted."
    call ESMF_DELayoutServiceComplete(delayout, de=workDe, rc=rc)
    if (rc /= ESMF_SUCCESS) finalrc=rc
  endif
enddo
deallocate(localDeToDeMap)
if (finalrc /= ESMF_SUCCESS) call ESMF_Finalize(endflag=ESMF_END_ABORT)
```

51.4 Restrictions and Future Work

51.5 Design and Implementation Notes

The DELayout class is a light weight object. It stores the DE to PET and VAS mapping for all DEs within all PET instances and a list of local DEs for each PET instance. The DELayout does not store the computational and communication weights optionally provided as arguments to the create method. These hints are only used during create while they are available in user owned arrays.

51.6 Class API

51.6.1 ESMF_DELayoutAssignment(=) - DELayout assignment

INTERFACE:

```
interface assignment(=)
delayout1 = delayout2
```

ARGUMENTS:

```
type(ESMF_DELayout) :: delayout1
type(ESMF_DELayout) :: delayout2
```

STATUS:

- This interface is backward compatible with ESMF versions starting at 5.2.0r. If code using this interface compiles with any version of ESMF starting with 5.2.0r, then it will compile with the current version.

DESCRIPTION:

Assign delayout1 as an alias to the same ESMF DELayout object in memory as delayout2. If delayout2 is invalid, then delayout1 will be equally invalid after the assignment.

The arguments are:

delayout1 The `ESMF_DELayout` object on the left hand side of the assignment.

delayout2 The `ESMF_DELayout` object on the right hand side of the assignment.

51.6.2 ESMF_DELayoutOperator(==) - DELayout equality operator

INTERFACE:

```
interface operator(==)
  if (delayout1 == delayout2) then ... endif
            OR
  result = (delayout1 == delayout2)
```

RETURN VALUE:

```
logical :: result
```

ARGUMENTS:

```
type(ESMF_DELayout), intent(in) :: delayout1
type(ESMF_DELayout), intent(in) :: delayout2
```

STATUS:

- This interface is backward compatible with ESMF versions starting at 5.2.0r. If code using this interface compiles with any version of ESMF starting with 5.2.0r, then it will compile with the current version.

DESCRIPTION:

Test whether delayout1 and delayout2 are valid aliases to the same ESMF DELayout object in memory. For a more general comparison of two ESMF DELayouts, going beyond the simple alias test, the ESMF_DELayoutMatch() function (not yet implemented) must be used.

The arguments are:

delayout1 The `ESMF_DELayout` object on the left hand side of the equality operation.

delayout2 The `ESMF_DELayout` object on the right hand side of the equality operation.

51.6.3 ESMF_DELayoutOperator(/=) - DELayout not equal operator

INTERFACE:

```
interface operator(/=)
  if (delayout1 /= delayout2) then ... endif
            OR
  result = (delayout1 /= delayout2)
```

RETURN VALUE:

```
logical :: result
```

ARGUMENTS:

```
type(ESMF_DELayout), intent(in) :: delayout1
type(ESMF_DELayout), intent(in) :: delayout2
```

STATUS:

- This interface is backward compatible with ESMF versions starting at 5.2.0r. If code using this interface compiles with any version of ESMF starting with 5.2.0r, then it will compile with the current version.

DESCRIPTION:

Test whether delayout1 and delayout2 are *not* valid aliases to the same ESMF DELayout object in memory. For a more general comparison of two ESMF DELayouts, going beyond the simple alias test, the ESMF_DELayoutMatch() function (not yet implemented) must be used.

The arguments are:

delayout1 The `ESMF_DELayout` object on the left hand side of the non-equality operation.

delayout2 The `ESMF_DELayout` object on the right hand side of the non-equality operation.

51.6.4 ESMF_DELayoutCreate - Create DELayout object

INTERFACE:

```
! Private name; call using ESMF_DELayoutCreate()
recursive function ESMF_DELayoutCreateDefault(deCount, &
  deGrouping, pinflag, petList, vm, rc)
```

RETURN VALUE:

```
type(ESMF_DELayout) :: ESMF_DELayoutCreateDefault
```

ARGUMENTS:

```
 -- The following arguments require argument keyword syntax (e.g. rc=rc). --
     integer,                      intent(in),  optional :: deCount
     integer, target,              intent(in),  optional :: deGrouping(:)
     type(ESMF_Pin_Flag),          intent(in),  optional :: pinflag
     integer, target,              intent(in),  optional :: petList(:)
     type(ESMF_VM),                intent(in),  optional :: vm
     integer,                      intent(out), optional :: rc
```

STATUS:

- This interface is backward compatible with ESMF versions starting at 5.2.0r. If code using this interface compiles with any version of ESMF starting with 5.2.0r, then it will compile with the current version.

DESCRIPTION:

Create an `ESMF_DELayout` object on the basis of optionally provided restrictions. By default a DELayout with deCount equal to petCount will be created, each DE mapped to a single PET. However, the number of DEs as well grouping of DEs and PETs can be specified via the optional arguments.

The arguments are:

[deCount] Number of DEs to be provided by the created DELayout. By default the number of DEs equals the number of PETs in the associated VM context. Specifying a `deCount` smaller than the number of PETs will result in unassociated PETs. This may be used to share VM resources between DELayouts within the same ESMF component. Specifying a `deCount` greater than the number of PETs will result in multiple DE to PET mapping.

[deGrouping] This optional argument must be of size deCount. Its content assigns a DE group index to each DE of the DELayout. A group index of -1 indicates that the associated DE isn't member of any particular group. The significance of DE groups is that all the DEs belonging to a certain group will be mapped against the *same* PET. This does not, however, mean that DEs belonging to different DE groups must be mapped to different PETs.

[pinflag] This flag specifies which type of resource DEs are pinned to. The default is to pin DEs to PETs. Alternatively it is also possible to pin DEs to VASs. See section 51.2.1 for a list of valid pinning options.

[petList] List specifying PETs to be used by this DELayout. This can be used to control the PET overlap between DELayouts within the same ESMF component. It is erroneous to specify PETs that are not within the provided VM context. The default is to include all the PETs of the VM.

[vm] If present, the DELayout object is created on the specified `ESMF_VM` object. The default is to create on the VM of the current context.

[rc] Return code; equals `ESMF_SUCCESS` if there are no errors.

51.6.5 ESMF_DELayoutCreate - Create DELayout from petMap

INTERFACE:

```
! Private name; call using ESMF_DELayoutCreate()
recursive function ESMF_DELayoutCreateFromPetMap(petMap, &
  pinflag, vm, rc)
```

RETURN VALUE:

```
type(ESMF_DELayout) :: ESMF_DELayoutCreateFromPetMap
```

ARGUMENTS:

```
     integer,                      intent(in)            :: petMap(:)
 -- The following arguments require argument keyword syntax (e.g. rc=rc). --
     type(ESMF_Pin_Flag),          intent(in),  optional :: pinflag
     type(ESMF_VM),                intent(in),  optional :: vm
     integer,                      intent(out), optional :: rc
```

STATUS:

- This interface is backward compatible with ESMF versions starting at 5.2.0r. If code using this interface compiles with any version of ESMF starting with 5.2.0r, then it will compile with the current version.

DESCRIPTION:

Create an `ESMF_DELayout` with exactly specified DE to PET mapping.

This ESMF method must be called in unison by all PETs of the VM. Calling this method from a PET not part of the VM or not calling it from a PET that is part of the VM will result in undefined behavior. ESMF does not guard against violation of the unison requirement. The call is not collective, there is no communication between PETs.

The arguments are:

petMap List specifying the DE-to-PET mapping. The list elements correspond to DE 0, 1, 2, ... and map against the specified PET of the VM context. The size of the `petMap` argument determines the number of DEs in the created DELayout. It is erroneous to specify a PET identifier that lies outside the VM context.

[pinflag] This flag specifies which type of resource DEs are pinned to. The default is to pin DEs to PETs. Alternatively it is also possible to pin DEs to VASs. See section 51.2.1 for a list of valid pinning options.

[vm] If present, the DELayout object is created on the specified `ESMF_VM` object. The default is to create on the VM of the current context.

[rc] Return code; equals `ESMF_SUCCESS` if there are no errors.

51.6.6 ESMF_DELayoutDestroy - Release resources associated with DELayout object

INTERFACE:

```
recursive subroutine ESMF_DELayoutDestroy(delayout, noGarbage, rc)
```

ARGUMENTS:

```
     type(ESMF_DELayout),  intent(inout)          :: delayout
 -- The following arguments require argument keyword syntax (e.g. rc=rc). --
     logical,              intent(in),   optional :: noGarbage
     integer,              intent(out),  optional :: rc
```

STATUS:

- This interface is backward compatible with ESMF versions starting at 5.2.0r. If code using this interface compiles with any version of ESMF starting with 5.2.0r, then it will compile with the current version.
- This interface was modified since ESMF version 5.2.0r. The fact that code using this interface compiles with the current ESMF version does not guarantee that it compiles with previous versions of this interface. If user code compatibility with version 5.2.0r is desired then care must be taken to limit the use of this interface to features that were available in the 5.2.0r release.
  Changes made after the 5.2.0r release:

  7.0.0 Added argument `noGarbage`. The argument provides a mechanism to override the default garbage collection mechanism when destroying an ESMF object.

DESCRIPTION:

Destroy an `ESMF_DELayout` object, releasing the resources associated with the object.

By default a small remnant of the object is kept in memory in order to prevent problems with dangling aliases. The default garbage collection mechanism can be overridden with the `noGarbage` argument.

The arguments are:

delayout `ESMF_DELayout` object to be destroyed.

[noGarbage] If set to `.TRUE.` the object will be fully destroyed and removed from the ESMF garbage collection system. Note however that under this condition ESMF cannot protect against accessing the destroyed object through dangling aliases – a situation which may lead to hard to debug application crashes.

It is generally recommended to leave the `noGarbage` argument set to `.FALSE.` (the default), and to take advantage of the ESMF garbage collection system which will prevent problems with dangling aliases or incorrect sequences of destroy calls. However this level of support requires that a small remnant of the object is kept in memory past the destroy call. This can lead to an unexpected increase in memory consumption over the course of execution in applications that use temporary ESMF objects. For situations where the repeated creation and destruction of temporary objects leads to memory issues, it is recommended to call with `noGarbage` set to `.TRUE.`, fully removing the entire temporary object from memory.

[rc] Return code; equals `ESMF_SUCCESS` if there are no errors.

51.6.7 ESMF_DELayoutGet - Get object-wide DELayout information

INTERFACE:

```
recursive subroutine ESMF_DELayoutGet(delayout, vm, deCount,&
  petMap, vasMap, oneToOneFlag, pinflag, localDeCount, localDeToDeMap, &
  localDeList, &      ! DEPRECATED ARGUMENT
  vasLocalDeCount, vasLocalDeToDeMap, &
  vasLocalDeList, &   ! DEPRECATED ARGUMENT
  rc)
```

ARGUMENTS:

```
  type(ESMF_DELayout),      intent(in)            :: delayout
-- The following arguments require argument keyword syntax (e.g. rc=rc). --
  type(ESMF_VM),            intent(out), optional :: vm
  integer,                  intent(out), optional :: deCount
  integer, target,          intent(out), optional :: petMap(:)
  integer, target,          intent(out), optional :: vasMap(:)
  logical,                  intent(out), optional :: oneToOneFlag
  type(ESMF_Pin_Flag),      intent(out), optional :: pinflag
  integer,                  intent(out), optional :: localDeCount
  integer, target,          intent(out), optional :: localDeToDeMap(:)
  integer, target, intent(out), optional :: localDeList(:)  !DEPRECATED ARG
  integer,                  intent(out), optional :: vasLocalDeCount
  integer, target,          intent(out), optional :: vasLocalDeToDeMap(:)
  integer, target, intent(out), optional :: vasLocalDeList(:) !DEPRECATED ARG
  integer,                  intent(out), optional :: rc
```

STATUS:

- This interface is backward compatible with ESMF versions starting at 5.2.0r. If code using this interface compiles with any version of ESMF starting with 5.2.0r, then it will compile with the current version.
- This interface was modified since ESMF version 5.2.0r. The fact that code using this interface compiles with the current ESMF version does not guarantee that it compiles with previous versions of this interface. If user code compatibility with version 5.2.0r is desired then care must be taken to limit the use of this interface to features that were available in the 5.2.0r release.
  Changes made after the 5.2.0r release:

  5.2.0rp1 Added arguments `localDeToDeMap` and `vasLocalDeToDeMap`. Started to deprecate arguments `localDeList` and `vasLocalDeList`. The new argument names correctly use the `Map` suffix and better describe the returned information. This was pointed out by user request.

DESCRIPTION:

Access to DELayout information.

The arguments are:

delayout Queried `ESMF_DELayout` object.

[vm] The `ESMF_VM` object on which `delayout` is defined.

[deCount] The total number of DEs in the DELayout.

[petMap] List of PETs against which the DEs are mapped. The `petMap` argument must at least be of size `deCount`.

[vasMap] List of VASs against which the DEs are mapped. The `vasMap` argument must at least be of size `deCount`.

[oneToOneFlag] A value of `.TRUE.` indicates that `delayout` maps each DE to a single PET, and each PET maps to a single DE. All other layouts return a value of `.FALSE.`.

[pinflag] The type of DE pinning. See section 51.2.1 for a list of valid pinning options.

[localDeCount] The number of DEs in the DELayout associated with the local PET.

[localDeToDeMap] Mapping between localDe indices and the (global) DEs associated with the local PET. The localDe index variables are discussed in sections 51.3.7 and 29.2.5. The provided actual argument must be of size `localDeCount`.

[localDeList] **DEPRECATED ARGUMENT!** Please use the argument `localDeToDeMap` instead.

[vasLocalDeCount] The number of DEs in the DELayout associated with the local VAS.

[vasLocalDeToDeMap] Mapping between localDe indices and the (global) DEs associated with the local VAS. The localDe index variables are discussed in sections 51.3.7 and 29.2.5. The provided actual argument must be of size `localDeCount`.

[vasLocalDeList] **DEPRECATED ARGUMENT!** Please use the argument `vasLocalDeToDeMap` instead.

[rc] Return code; equals `ESMF_SUCCESS` if there are no errors.

51.6.8 ESMF_DELayoutIsCreated - Check whether a DELayout object has been created

INTERFACE:

```
function ESMF_DELayoutIsCreated(delayout, rc)
```

RETURN VALUE:

```
logical :: ESMF_DELayoutIsCreated
```

ARGUMENTS:

```
     type(ESMF_DELayout), intent(in)            :: delayout
 -- The following arguments require argument keyword syntax (e.g. rc=rc). --
     integer,             intent(out), optional :: rc
```

DESCRIPTION:

Return `.true.` if the `delayout` has been created. Otherwise return `.false.`. If an error occurs, i.e. `rc /= ESMF_SUCCESS` is returned, the return value of the function will also be `.false.`.

The arguments are:

delayout `ESMF_DELayout` queried.

[rc] Return code; equals `ESMF_SUCCESS` if there are no errors.

51.6.9 ESMF_DELayoutPrint - Print DELayout information

INTERFACE:

```
subroutine ESMF_DELayoutPrint(delayout, rc)
```

ARGUMENTS:

```
     type(ESMF_DELayout),  intent(in)            :: delayout
 -- The following arguments require argument keyword syntax (e.g. rc=rc). --
     integer,              intent(out), optional :: rc
```

STATUS:

- This interface is backward compatible with ESMF versions starting at 5.2.0r. If code using this interface compiles with any version of ESMF starting with 5.2.0r, then it will compile with the current version.

DESCRIPTION:

Prints internal information about the specified `ESMF_DELayout` object to `stdout`.

The arguments are:

delayout Specified `ESMF_DELayout` object.

[rc] Return code; equals `ESMF_SUCCESS` if there are no errors.

51.6.10 ESMF_DELayoutServiceComplete - Close service window

INTERFACE:

```
recursive subroutine ESMF_DELayoutServiceComplete(delayout, de, rc)
```

ARGUMENTS:

```
     type(ESMF_DELayout),  intent(in)            :: delayout
     integer,              intent(in)            :: de
 -- The following arguments require argument keyword syntax (e.g. rc=rc). --
     integer,              intent(out), optional :: rc
```

STATUS:

- This interface is backward compatible with ESMF versions starting at 5.2.0r. If code using this interface compiles with any version of ESMF starting with 5.2.0r, then it will compile with the current version.

DESCRIPTION:

The PET who's service offer was accepted for `de` must use `ESMF_DELayoutServiceComplete` to close the service window.

The arguments are:

delayout Specified `ESMF_DELayout` object.

de DE for which to close service window.

[rc] Return code; equals `ESMF_SUCCESS` if there are no errors.

51.6.11 ESMF_DELayoutServiceOffer - Offer service for a DE in DELayout

INTERFACE:

```
recursive function ESMF_DELayoutServiceOffer(delayout, de, rc)
```

RETURN VALUE:

```
type(ESMF_ServiceReply_Flag) :: ESMF_DELayoutServiceOffer
```

ARGUMENTS:

```
    type(ESMF_DELayout),  intent(in)            :: delayout
    integer,              intent(in)            :: de
-- The following arguments require argument keyword syntax (e.g. rc=rc). --
    integer,              intent(out), optional :: rc
```

STATUS:

- This interface is backward compatible with ESMF versions starting at 5.2.0r. If code using this interface compiles with any version of ESMF starting with 5.2.0r, then it will compile with the current version.

DESCRIPTION:

Offer service for a DE in the `ESMF_DELayout` object. This call together with `ESMF_DELayoutServiceComplete()` provides the synchronization primitives between the PETs of an ESMF multi-threaded VM necessary for dynamic load balancing via a work queue approach.

The calling PET will either receive `ESMF_SERVICEREPLY_ACCEPT` if the service offer has been accepted by DELayout or `ESMF_SERVICEREPLY_DENY` if the service offer was denied. The service offer paradigm is different from a simple mutex approach in that the DELayout keeps track of the number of service offers issued for each DE by each PET and accepts only one PET's offer for each offer increment. This requires that all PETs use `ESMF_DELayoutServiceOffer()` in unison. See section 51.2.2 for the potential return values.

The arguments are:

delayout Specified `ESMF_DELayout` object.

de DE for which service is offered by the calling PET.

[rc] Return code; equals `ESMF_SUCCESS` if there are no errors.

51.6.12 ESMF_DELayoutValidate - Validate DELayout internals

INTERFACE:

```
subroutine ESMF_DELayoutValidate(delayout, rc)
```

ARGUMENTS:

```
     type(ESMF_DELayout),  intent(in)            :: delayout
 -- The following arguments require argument keyword syntax (e.g. rc=rc). --
     integer,              intent(out), optional :: rc
```

STATUS:

- This interface is backward compatible with ESMF versions starting at 5.2.0r. If code using this interface compiles with any version of ESMF starting with 5.2.0r, then it will compile with the current version.

DESCRIPTION:

Validates that the `delayout` is internally consistent. The method returns an error code if problems are found.

The arguments are:

delayout Specified `ESMF_DELayout` object.

[rc] Return code; equals `ESMF_SUCCESS` if there are no errors.

52 VM Class

52.1 Description

The ESMF VM (Virtual Machine) class is a generic representation of hardware and system software resources. There is exactly one VM object per ESMF Component, providing the execution environment for the Component code. The VM class handles all resource management tasks for the Component class and provides a description of the underlying configuration of the compute resources used by a Component.

In addition to resource description and management, the VM class offers the lowest level of ESMF communication methods. The VM communication calls are very similar to MPI. Data references in VM communication calls must be provided as raw, language-specific, one-dimensional, contiguous data arrays. The similarity between VM and MPI communication calls is striking and there are many equivalent point-to-point and collective communication calls.

However, unlike MPI, the VM communication calls support communication between threaded PETs in a completely transparent fashion.

Many ESMF applications do not interact with the VM class directly very much. The resource management aspect is wrapped completely transparent into the ESMF Component concept. Often the only reason that user code queries a Component object for the associated VM object is to inquire about resource information, such as the `localPet` or the `petCount`. Further, for most applications the use of higher level communication APIs, such as provided by Array and Field, are much more convenient than using the low level VM communication calls.

The basic elements of a VM are called PETs, which stands for Persistent Execution Threads. These are equivalent to OS threads with a lifetime of at least that of the associated component. All VM functionality is expressed in terms of PETs. In the simplest, and most common case, a PET is equivalent to an MPI process. However, ESMF also supports multi-threading, where multiple PETs run as Pthreads inside the same virtual address space (VAS).

The resource management functions of the VM class become visible when a component, or the driver code, creates sub-components. Section 16.4.8 discusses this aspect from the Superstructure perspective and provides links to the relevant Component examples in the documentation.

There are two parts to resource management, the parent and the child. When the parent component creates a child component, the parent VM object provides the resources on which the child is created with `ESMF_GridCompCreate()` or `ESMF_CplCompCreate()`. The optional `petList` argument to these calls limits the resources that the parent gives to a specific child. The child component, may specify - during its optional `ESMF_<Grid/Cpl>CompSetVM()` method - how it wants to arrange the inherited resources in its own VM. After this, all standard ESMF methods of the Component, including `ESMF_<Grid/Cpl>CompSetServices()`, will execute in the child VM. Notice that the `ESMF_<Grid/Cpl>CompSetVM()` routine, although part of the child Component, must execute *before* the child VM has been started up. It runs in the parent VM context. The child VM is created and started up just before the user-written set services routine, specified as an argument to `ESMF_<Grid/Cpl>CompSetServices()`, is entered.

52.2 Constants

52.2.1 ESMF_VMEPOCH

DESCRIPTION:
Specifies the kind of VM Epoch being entered.

The type of this flag is:

`type(ESMF_VMEpoch_Flag)`

The valid values are:

ESMF_VMEPOCH_NONE An epoch wihout special behavior.

ESMF_VMEPOCH_BUFFER This option must only be used for parts of the code with distinct sending and receiving PETs, i.e. where no PETs are both sender and receiver. All non-blocking messages are being buffered. A single message is sent between unique pairs of src-dst PETs. This can significantly improve performance for cases with a large imbalance in the number of sending versus receiving PETs. The extra buffering also improves the overall asynchronous behavior between the sending and receiving side.

52.3 Use and Examples

The concept of the ESMF Virtual Machine (VM) is so fundamental to the framework that every ESMF application uses it. However, for many user applications the VM class is transparently hidden behind the ESMF Component concept and higher data classes (e.g. Array, Field). The interaction between user code and VM is often only indirect. The following examples provide an overview of where the VM class can come into play in user code.

52.3.1 Global VM

This complete example program demonstrates the simplest ESMF application, consisting of only a main program without any Components. The global VM, which is automatically created during the `ESMF_Initialize()` call, is obtained using two different methods. First the global VM will be returned by `ESMF_Initialize()` if the optional `vm` argument is specified. The example uses the VM object obtained this way to call the VM print method. Second, the global VM can be obtained anywhere in the user application using the `ESMF_VMGetGlobal()` call. The identical VM is returned and several VM query methods are called to inquire about the associated resources.

```
program ESMF_VMDefaultBasicsEx

  use ESMF

  implicit none

  ! local variables
  integer:: rc
  type(ESMF_VM):: vm
  integer:: localPet, petCount, peCount, ssiId, vas
```

Providing the optional vm argument to `ESMF_Initialize()` is one way of obtaining the global VM.

```
  call ESMF_Initialize(vm=vm, defaultlogfilename="VMDefaultBasicsEx.Log", &
                       logkindflag=ESMF_LOGKIND_MULTI, rc=rc)

  call ESMF_VMPrint(vm, rc=rc)
```

Calling `ESMF_VMGetGlobal()` anywhere in the user application is the other way to obtain the global VM object.

```
  call ESMF_VMGetGlobal(vm=vm, rc=rc)

  call ESMF_VMGet(vm, localPet=localPet, petCount=petCount, peCount=peCount, &
    rc=rc)
```

The VM object contains information about the associated resources. If the user code requires this information it must query the VM object.

```
  print *, "This PET is localPet: ", localPet
  print *, "of a total of ",petCount," PETs in this VM."
  print *, "There are ", peCount," PEs referenced by this VM"

  call ESMF_VMGet(vm, localPet, peCount=peCount, ssiId=ssiId, vas=vas, rc=rc)
```

```
  print *, "This PET is executing in virtual address space (VAS) ", vas
  print *, "located on single system image (SSI) ", ssiId
  print *, "and is associated with ", peCount, " PEs."

  call ESMF_Finalize(rc=rc)

end program
```

52.3.2 Current VM and Components

The following example shows the role that the VM class plays in connection with ESMF Components. A single Component is created in the main program. Through the optional `petList` argument the driver code specifies which resources are given to the component. Here only resources associated with PET 0 are given to the `gcomp` object.

When the Component code is invoked through the standard ESMF Component methods – Initialize, Run, or Finalize – the Component's VM is automatically entered. This VM is referred to as the *current VM* from within the component. The current VM can be obtained by user-written Component code either through querying the Component object or by using the `ESMF_VMGetCurrent()` method. The latter can be convenient for code that does not have direct access to the associated ESMF Component.

```
module ESMF_VMComponentEx_gcomp_mod


  recursive subroutine mygcomp_init(gcomp, istate, estate, clock, rc)
    type(ESMF_GridComp)   :: gcomp
    type(ESMF_State)      :: istate, estate
    type(ESMF_Clock)      :: clock
    integer, intent(out)  :: rc

    ! local variables
    type(ESMF_VM):: vm

    rc = ESMF_SUCCESS

    ! Access the current VM from the Component.
    call ESMF_GridCompGet(gcomp, vm=vm, rc=rc)
    if (rc /= ESMF_SUCCESS) return

    ! The VM object contains information about the execution environment of
    ! the Component.

    call ESMF_VMPrint(vm, rc=rc)
    if (rc /= ESMF_SUCCESS) return

  end subroutine !-----------------------------------------------------------


  recursive subroutine mygcomp_run(gcomp, istate, estate, clock, rc)
    type(ESMF_GridComp)   :: gcomp
    type(ESMF_State)      :: istate, estate
    type(ESMF_Clock)      :: clock
    integer, intent(out)  :: rc
```

```
    ! local variables
    type(ESMF_VM):: vm

    rc = ESMF_SUCCESS

    ! Access the current VM directly (without use of Component).
    call ESMF_VMGetCurrent(vm=vm)
    if (rc /= ESMF_SUCCESS) return

  end subroutine !---------------------------------------------------------------

  recursive subroutine mygcomp_final(gcomp, istate, estate, clock, rc)
    type(ESMF_GridComp)   :: gcomp
    type(ESMF_State)      :: istate, estate
    type(ESMF_Clock)      :: clock
    integer, intent(out)  :: rc

    ! local variables
    type(ESMF_VM):: vm

    rc = ESMF_SUCCESS

    ! Again access the current VM from the Component.
    call ESMF_GridCompGet(gcomp, vm=vm, rc=rc)
    if (rc /= ESMF_SUCCESS) return

  end subroutine !---------------------------------------------------------------

end module

program ESMF_VMComponentEx

  use ESMF

  use ESMF_VMComponentEx_gcomp_mod
  implicit none

  ! local variables
  integer             :: rc
  type(ESMF_GridComp) :: gcomp

  gcomp = ESMF_GridCompCreate(petList=(/0/), rc=rc)

  call ESMF_GridCompSetServices(gcomp, userRoutine=mygcomp_register, rc=rc)

  call ESMF_GridCompInitialize(gcomp, rc=rc)

  call ESMF_GridCompRun(gcomp, rc=rc)

  call ESMF_GridCompFinalize(gcomp, rc=rc)

  call ESMF_GridCompDestroy(gcomp, rc=rc)
```

```
  call ESMF_Finalize(rc=rc)

end program
```

52.3.3 Accessing the MPI Communicator from a VM object

Sometimes user code requires access to the MPI communicator, e.g. to support legacy code that contains explict MPI communication calls. The correct way of wrapping such code into ESMF is to obtain the MPI intra-communicator out of the VM object. In order not to interfere with ESMF communications it is advisable to duplicate the communicator before using it in user-level MPI calls. In this example the duplicated communicator is used for a user controlled `MPI_Barrier()`.

```
  integer:: mpic

  integer:: mpic2

  call ESMF_VMGet(vm, mpiCommunicator=mpic, rc=rc)
  ! The returned MPI communicator spans the same MPI processes that the VM
  ! is defined on.

  call MPI_Comm_dup(mpic, mpic2, ierr)
  ! Duplicate the MPI communicator not to interfere with ESMF communications.
  ! The duplicate MPI communicator can be used in any MPI call in the user
  ! code. Here the MPI_Barrier() routine is called.
  call MPI_Barrier(mpic2, ierr)
```

52.3.4 Using the MPI Communicator returned by ESMF with the Fortran 2008 MPI binding

The Fortran 2008 MPI language binding defines `type MPI_Comm` to represent the MPI communicator. The following example demonstrates how the MPI communicator queried from the ESMF VM object can be used with the Fortran 2008 MPI binding.

```
  use mpi_f08

  integer       :: int_mpic
  type(MPI_Comm):: mpic

  type(MPI_Comm):: mpic2

  call ESMF_VMGet(vm, mpiCommunicator=int_mpic, rc=rc)
  ! The returned MPI communicator spans the same MPI processes that the VM
  ! is defined on.

  mpic%mpi_val = int_mpic ! integer version of communicator -> type(MPI_Comm)

  ! Now mpic can be used in the Fortran 2008 MPI binding interfaces
```

```
call MPI_Comm_dup(mpic, mpic2, ierr)
! Duplicate the MPI communicator not to interfere with ESMF communications.
! The duplicate MPI communicator can be used in any MPI call in the user
! code. Here the MPI_Barrier() routine is called.
call MPI_Barrier(mpic2, ierr)
```

52.3.5 Nesting ESMF inside a user MPI application

It is possible to nest an ESMF application inside a user application that explicitly initializes MPI. This means that the user code calls `MPI_Init()` or `MPI_Init_thread()`. The `ESMF_Initialize()` call automatically checks whether MPI has already been initialized, and if so, does *not* initialize MPI internally. On the finalize side, `ESMF_Finalize()` can be instructed to *not* call `MPI_Finalize()`, making it the responsibility of the outer user code to finalize MPI by explicitly by calling `MPI_Finalize()`.

```
! For cases where ESMF resource management is desired (e.g. for threading),
! ESMF_InitializePreMPI() must be called before MPI_Init().
call ESMF_InitializePreMPI(rc=rc)

! User code initializes MPI. In order to support the ESMF resource management
! features, MPI must be initialized with {\tt MPI\_THREAD\_SERIALIZED} thread
! support or higher.
call MPI_Init_thread(MPI_THREAD_SERIALIZED, provided, ierr)

! ESMF_Initialize() does not initialize MPI if it finds MPI initialized
! already.
call ESMF_Initialize(defaultlogfilename="VMUserMpiEx.Log", &
  logkindflag=ESMF_LOGKIND_MULTI, rc=rc)

! Use ESMF here...

! Calling ESMF_Finalize() with endflag=ESMF_END_KEEPMPI instructs ESMF
! to keep MPI active.
call ESMF_Finalize(endflag=ESMF_END_KEEPMPI, rc=rc)

! It is now the responsibility of the outer user code to finalize MPI.
call MPI_Finalize(ierr)
```

52.3.6 Nesting ESMF inside a user MPI application on a subset of MPI ranks

The previous example demonstrated that it is possible to nest an ESMF application, i.e. `ESMF_Initialize()`...`ESMF_Finalize()` inside `MPI_Init()`...`MPI_Finalize()`. It is not necessary that all MPI ranks enter the ESMF application. The following example shows how the user code can pass an MPI communicator to `ESMF_Initialize()`, and enter the ESMF application on a subset of MPI ranks.

```
! User code initializes MPI.
call MPI_Init(ierr)

! User code determines the local rank.
call MPI_Comm_rank(MPI_COMM_WORLD, rank, ierr)
```

```
! User code prepares MPI communicator "esmfComm", that allows rank 0 and 1
! to be grouped together.
if (rank < 2) then
  ! first communicator split with color=0
  call MPI_Comm_split(MPI_COMM_WORLD, 0, 0, esmfComm, ierr)
else
  ! second communicator split with color=1
  call MPI_Comm_split(MPI_COMM_WORLD, 1, 0, esmfComm, ierr)
endif

if (rank < 2) then
  ! Only call ESMF_Initialize() on rank 0 and 1, passing the prepared MPI
  ! communicator that spans these ranks.
  call ESMF_Initialize(mpiCommunicator=esmfComm, &
    defaultlogfilename="VMUserMpiCommEx.Log", &
    logkindflag=ESMF_LOGKIND_MULTI, rc=rc)

  ! Use ESMF here...

  ! Calling ESMF_Finalize() with endflag=ESMF_END_KEEPMPI instructs ESMF
  ! to keep MPI active.
  call ESMF_Finalize(endflag=ESMF_END_KEEPMPI, rc=rc)

else
  ! Ranks 2 and above do non-ESMF work...

endif

! Free the MPI communicator before finalizing MPI.
call MPI_Comm_free(esmfComm, ierr)

! It is the responsibility of the outer user code to finalize MPI.
call MPI_Finalize(ierr)
```

52.3.7 Nesting multiple concurrent instances of ESMF under separate MPI communicators

Multiple instances of ESMF can run concurrently under the same user main program on separate MPI communicators. The user program first splits `MPI_COMM_WORLD` into separate MPI communicators. Each communicator is then used to run a separate ESMF instance by passing it into `ESMF_Initialize()` on the appropriate MPI ranks.

Care must be taken to set the `defaultlogfilename` to be unique on each ESMF instances. This prevents concurrent ESMF instances from writing to the same log file. Further, each ESMF instances must call `ESMF_Finalize()` with the `endflag=ESMF_END_KEEPMPI` option in order to hand MPI control back to the user program. The outer user program is ultimately responsible for destroying the MPI communicators and to cleanly shut down MPI.

```
! User code initializes MPI.
call MPI_Init(ierr)

! User code determines the local rank and overall size of MPI_COMM_WORLD
call MPI_Comm_rank(MPI_COMM_WORLD, rank, ierr)
call MPI_Comm_size(MPI_COMM_WORLD, size, ierr)
```

```
! User code prepares different MPI communicators.
! Here a single MPI_Comm_split() call is used to split MPI_COMM_WORLD
! into two non-overlapping communicators:
! One communicator for ranks 0 and 1, and the other for ranks 2 and above.
if (rank < 2) then
  ! first communicator split with color=0
  call MPI_Comm_split(MPI_COMM_WORLD, 0, 0, esmfComm, ierr)
else
  ! second communicator split with color=1
  call MPI_Comm_split(MPI_COMM_WORLD, 1, 0, esmfComm, ierr)
endif

if (rank < 2) then
  ! Ranks 0 and 1 enter ESMF_Initialize() with the prepared communicator.
  ! Care is taken to set a unique log file name.
  call ESMF_Initialize(mpiCommunicator=esmfComm, &
    defaultlogfilename="VMUserMpiCommMultiEx1.Log", &
    logkindflag=ESMF_LOGKIND_MULTI, rc=rc)

  ! Use ESMF here...

  ! Finalize ESMF without finalizing MPI. The user application will call
  ! MPI_Finalize() on all ranks.
  call ESMF_Finalize(endflag=ESMF_END_KEEPMPI, rc=rc)

else
  ! Ranks 2 and above enter ESMF_Initialize() with the prepared communicator.
  ! Care is taken to set a unique log file name.
  call ESMF_Initialize(mpiCommunicator=esmfComm, &
    defaultlogfilename="VMUserMpiCommMultiEx2.Log", &
    logkindflag=ESMF_LOGKIND_MULTI, rc=rc)

  ! Use ESMF here...

  ! Finalize ESMF without finalizing MPI. The user application will call
  ! MPI_Finalize() on all ranks.
  call ESMF_Finalize(endflag=ESMF_END_KEEPMPI, rc=rc)

endif

! Free the MPI communicator(s) before finalizing MPI.
call MPI_Comm_free(esmfComm, ierr)

! It is the responsibility of the outer user code to finalize MPI.
call MPI_Finalize(ierr)
```

52.3.8 Controlling the MPI thread support level

By default, `ESMF_Initialize()` initializes MPI, requesting the maximum available thread support level, i.e. `MPI_THREAD_MULTIPLE`. However, all ESMF features are available as long as the MPI implementation can provide

MPI_THREAD_SERIALIZED or above. In fact, most ESMF features are available for the lowest MPI thread support level of MPI_THREAD_SINGLE. The only exception are the advanced resource management features, where some of the parent PETs are paused while the child component is executing, using the associated resources under a smaller set of child PETs. However, when these advanced features are not needed by an application, there are cases where running with a lower MPI thread support level might be beneficial, e.g. for performance or memory considerations.

One way to affect the MPI thread support level is by explicitly calling MPI_Init() or MPI_Init_thread() in user code *before* calling the ESMF_Initialize(). This approach has been shown in some of the previous examples.

Another, often more convenient way of controlling the MPI thread support level requested during initialization is by setting the ESMF_RUNTIME_MPI_THREAD_SUPPORT environment variable. This variable accepts any of the valid MPI settings.

- MPI_THREAD_SINGLE
- MPI_THREAD_FUNNELED
- MPI_THREAD_SERIALIZED
- MPI_THREAD_MULTIPLE

The setting is then used during ESMF_Initialize() when initializing MPI.

For example, with

```
$ export ESMF_RUNTIME_MPI_THREAD_SUPPORT=MPI_THREAD_SINGLE
```

for the bash shell, or

```
$ setenv ESMF_RUNTIME_MPI_THREAD_SUPPORT MPI_THREAD_SINGLE
```

for under the csh shell, the following example program will execute with MPI_THREAD_SINGLE as the MPI thread support level.

```
program ESMF_VMControlMPIThreadSupportEx

  use ESMF

  implicit none

  include 'mpif.h'

  ! local variables
  integer       :: rc
  integer       :: ierr, provided

  call ESMF_Initialize(defaultlogfilename="VMControlMPIThreadSupportEx.Log", &
    rc=rc)
```

At this point MPI has been initialized, requesting thread support according to the setting of environment variable `ESMF_RUNTIME_MPI_THREAD_SUPPORT`. Here it is `MPI_THREAD_SINGLE`.

MPI can be queried for the current level of thread support.

```
  call MPI_Query_thread(provided, ierr)
```

This can be used to check whether the correct MPI thread support level has been set.

```
  if (provided /= MPI_THREAD_SINGLE) then
    print *, "MPI thread support level not at MPI_THREAD_SINGLE."
    print *, "Something went wrong!!"
    call ESMF_Finalize(endflag=ESMF_END_ABORT)
  endif

  call ESMF_Finalize(rc=rc)

end program
```

52.3.9 Communication - Send and Recv

The VM layer provides MPI-like point-to-point communication. Use `ESMF_VMSend()` and `ESMF_VMRecv()` to pass data between two PETs. The following code sends data from PET 'src' and receives it on PET 'dst'. Both PETs must be part of the same VM.

Set up the `localData` array.

```
  count = 10
  allocate(localData(count))
  do i=1, count
    localData(i) = localPet*100 + i
  enddo
```

Carry out the data transfer between `src` PET and `dst` PET.

```
  if (localPet==src) then
    call ESMF_VMSend(vm, sendData=localData, count=count, dstPet=dst, rc=rc)
  endif

  if (localPet==dst) then
    call ESMF_VMRecv(vm, recvData=localData, count=count, srcPet=src, rc=rc)
  endif
```

Finally, on `dst` PET, test the received data for correctness.

```
  if (localPet==dst) then
    do i=1, count
      if (localData(i) /= src*100 + i) then
        finalrc = ESMF_RC_VAL_WRONG
      endif
    enddo
  endif
```

52.3.10 Communication - Scatter and Gather

The VM layer provides MPI-like collective communication. `ESMF_VMScatter()` scatters data located on `root` PET across all the PETs of the VM. `ESMF_VMGather()` provides the opposite operation, gathering data from all the PETs of the VM onto `root` PET.

```
integer, allocatable:: array1(:), array2(:)

! allocate data arrays
nsize = 2
nlen = nsize * petCount
allocate(array1(nlen))
allocate(array2(nsize))

! prepare data array1
do i=1, nlen
  array1(i) = localPet * 100 + i
enddo

call ESMF_VMScatter(vm, sendData=array1, recvData=array2, count=nsize, &
  rootPet=scatterRoot, rc=rc)

call ESMF_VMGather(vm, sendData=array2, recvData=array1, count=nsize, &
  rootPet=gatherRoot, rc=rc)
```

52.3.11 Communication - AllReduce and AllFullReduce

Use `ESMF_VMAllReduce()` to reduce data distributed across the PETs of a VM into a result vector, returned on all the PETs. Further, use `ESMF_VMAllFullReduce()` to reduce the data into a single scalar returned on all PETs.

```
integer, allocatable:: array1(:), array2(:)

! allocate data arrays
nsize = 2
allocate(array1(nsize))
allocate(array2(nsize))

! prepare data array1
do i=1, nsize
  array1(i) = localPet * 100 + i
enddo

call ESMF_VMAllReduce(vm, sendData=array1, recvData=array2, count=nsize, &
  reduceflag=ESMF_REDUCE_SUM, rc=rc)
! Reduce distributed sendData, element by element into recvData and
! return it on all the PETs.

call ESMF_VMAllFullReduce(vm, sendData=array1, recvData=result, &
  count=nsize, reduceflag=ESMF_REDUCE_SUM, rc=rc)
! Fully reduce the distributed sendData into a single scalar and
! return it in recvData on all PETs.
```

52.3.12 Communication - Non-blocking option and VMEpochs

The VM communication methods offer the option to execute in non-blocking mode. In this mode, both sending and receving calls return immediatly on each local PET. A separate synchronization call is needed to assure completion of the data transfer.

The separation of initiation and completion of the data transfer provides the opportunity for the underlying communication system to progress concurrently with other operations on the same PET. This can be leveraged to have profound impact on the performance of an algorithm that requires both computation and communication.

Another critical application of the non-blocking communication mode is the prevention of deadlocks. In the default blocking mode, a receiving method will not return until the data transfer has completed. Sending methods may also not return, especially if the message being sent is above the implementation dependent internal buffer size. This behavior makes it often hard, if not impossible, to write safe algorithms that guarantee to not deadlock when communicating between a group of PETs. Using the communication calls in non-blocking mode simplifies this problem immensely.

The following code shows how `ESMF_VMSend()` and `ESMF_VMRecv()` are used in non-blocking mode by passing in the `ESMF_SYNC_NONBLOCKING` argument.

Set up the `localData` array.

```
do i=1, count
  localData(i) = localPet*100 + i
enddo
```

Initiate the data transfer between `src` PET and `dst` PET.

```
if (localPet==src) then
  call ESMF_VMSend(vm, sendData=localData, count=count, dstPet=dst, &
    syncflag=ESMF_SYNC_NONBLOCKING, rc=rc)
endif

if (localPet==dst) then
  call ESMF_VMRecv(vm, recvData=localData, count=count, srcPet=src, &
    syncflag=ESMF_SYNC_NONBLOCKING, rc=rc)
endif
```

There is no garantee at this point that the data transfer has actually started, let along completed. For this reason it is unsafe to overwrite the data in the `localData` array on `src` PET, or to access the `localData` array on `dst` PET. However both PETs are free to engage in other work while the data transfer may proceed concurrently.

```
! local computational work here, or other communications
```

Wait for the completion of all outstanding non-blocking communication calls by issuing the `ESMF_VMCommWaitAll()` call.

```
call ESMF_VMCommWaitAll(vm, rc=rc)
```

Finally, on `dst` PET, test the received data for correctness.

```
if (localPet==dst) then
  do i=1, count
```

```
    if (localData(i) /= src*100 + i) then
      finalrc = ESMF_RC_VAL_WRONG
    endif
  enddo
endif
```

Sometimes it is necessary to wait for individual outstanding communications specifically. This can be accomplished by using `ESMF_CommHandle` objects. To demonstrate this, first re-initialize the `localData` array.

```
do i=1, count
  localData(i) = localPet*100 + i
  localData2(i) = localPet*1000 + i
enddo
```

Initiate the data transfer between `src` PET and `dst` PET, but this time also pass the `commhandle` variable of type `ESMF_CommHandle`. Here send two message between `src` and `dst` in order to have different outstanding messages to wait for.

```
if (localPet==src) then
  call ESMF_VMSend(vm, sendData=localData, count=count, dstPet=dst, &
    syncflag=ESMF_SYNC_NONBLOCKING, commhandle=commhandle(1), rc=rc)
  call ESMF_VMSend(vm, sendData=localData2, count=count, dstPet=dst, &
    syncflag=ESMF_SYNC_NONBLOCKING, commhandle=commhandle(2), rc=rc)
endif

if (localPet==dst) then
  call ESMF_VMRecv(vm, recvData=localData, count=count, srcPet=src, &
    syncflag=ESMF_SYNC_NONBLOCKING, commhandle=commhandle(1), rc=rc)
  call ESMF_VMRecv(vm, recvData=localData2, count=count, srcPet=src, &
    syncflag=ESMF_SYNC_NONBLOCKING, commhandle=commhandle(2), rc=rc)
endif
```

Now it is possible to specifically wait for the first data transfer, e.g. on the `dst` PET.

```
if (localPet==dst) then
  call ESMF_VMCommWait(vm, commhandle=commhandle(1), rc=rc)
endif
```

At this point there are still 2 outstanding communications on the `src` PET, and one outstanding communication on the `dst` PET. However, having returned from the specific `ESMF_VMCommWait()` call guarantees that the first communication on the `dst` PET has completed, i.e. the data has been received from the `src` PET, and can now be accessed in the `localData` array.

```
if (localPet==dst) then
  do i=1, count
    if (localData(i) /= src*100 + i) then
      finalrc = ESMF_RC_VAL_WRONG
    endif
  enddo
endif
```

Before accessing data from the second transfer, it is necessary to wait on the associated commhandle for completion.

```
if (localPet==dst) then
  call ESMF_VMCommWait(vm, commhandle=commhandle(2), rc=rc)
endif

if (localPet==dst) then
  do i=1, count
    if (localData2(i) /= src*1000 + i) then
      finalrc = ESMF_RC_VAL_WRONG
    endif
  enddo
endif
```

Finally the `commhandle` elements on the `src` side need to be cleared by waiting for them. This could be done using specific `ESMF_VMCommWait()` calls, similar to the `dst` side, or simply by waiting for all/any outstanding communications using `ESMF_VMCommWaitAll()` as in the previous example. This call can be issued without `commhandle` on all of the PETs.

```
call ESMF_VMCommWaitAll(vm, rc=rc)
```

For cases where multiple messages are being sent between the same `src`-`dst` pairs using non-blocking communications, performance can often be improved by aggregating individual messages. An extra buffer is needed to hold the collected messages. The result is a single data transfer for each PET pair. In many cases this can significantly reduce the time spent in communications. The ESMF VM class provides access to such a buffering technique through the `ESMF_VMEpoch` API.

The `ESMF_VMEpoch` API consists of two interfaces: `ESMF_VMEpochEnter()` and `ESMF_VMEpochExit()`. When entering an epoch, the user specifies the type of epoch that is to be entered. Currently only `ESMF_VMEPOCH_BUFFER` is available. Inside this epoch, non-blocking communication calls are aggregated and data transfers on the `src` side are not issued until the epoch is exited. On the `dst` side a single data transfer is received, and then divided over the actual non-blocking receive calls.

The following code repeates the previous example with two messages between `src` and `dst`. It is important that every PET only must act either as sender or receiver. A sending PET can send to many different PETs, and a receiving PET can receive from many PETs, but no PET must send *and* receive within the same epoch!

First re-initialize the `localData` array.

```
do i=1, count
  localData(i) = localPet*100 + i
  localData2(i) = localPet*1000 + i
enddo
```

Enter the `ESMF_VMEPOCH_BUFFER`.

```
call ESMF_VMEpochEnter(epoch=ESMF_VMEPOCH_BUFFER, rc=rc)
```

Now issue non-blocking send and receive calls as usual.

```
if (localPet==src) then
  call ESMF_VMSend(vm, sendData=localData, count=count, dstPet=dst, &
    syncflag=ESMF_SYNC_NONBLOCKING, commhandle=commhandle(1), rc=rc)

  call ESMF_VMSend(vm, sendData=localData2, count=count, dstPet=dst, &
    syncflag=ESMF_SYNC_NONBLOCKING, commhandle=commhandle(2), rc=rc)
```

```
  endif
  if (localPet==dst) then
    call ESMF_VMRecv(vm, recvData=localData, count=count, srcPet=src, &
      syncflag=ESMF_SYNC_NONBLOCKING, commhandle=commhandle(1), rc=rc)

    call ESMF_VMRecv(vm, recvData=localData2, count=count, srcPet=src, &
      syncflag=ESMF_SYNC_NONBLOCKING, commhandle=commhandle(2), rc=rc)

  endif
```

No data transfer has been initiated at this point due to the fact that this code is inside the `ESMF_VMEPOCH_BUFFER`. On the `dst` side the same methods are used to wait for the data transfer. However, it is not until the exit of the epoch on the `src` side that data is transferred to the `dst` side.

```
  if (localPet==dst) then
    call ESMF_VMCommWait(vm, commhandle=commhandle(1), rc=rc)

  endif

  if (localPet==dst) then
    do i=1, count
      if (localData(i) /= src*100 + i) then
        finalrc = ESMF_RC_VAL_WRONG
      endif
    enddo
  endif

  if (localPet==dst) then
    call ESMF_VMCommWait(vm, commhandle=commhandle(2), rc=rc)

  endif

  if (localPet==dst) then
    do i=1, count
      if (localData2(i) /= src*1000 + i) then
        finalrc = ESMF_RC_VAL_WRONG
      endif
    enddo
  endif
```

Now exit the epoch, to trigger the data transfer on the `src` side.

```
  call ESMF_VMEpochExit(rc=rc)
```

Finally clear the outstanding communication handles on the `src` side. This needs to happen first inside the *next* `ESMF_VMEPOCH_BUFFER`. As before, waits could be issued either for the specific `commhandle` elements not yet explicitly cleared, or a general call to `ESMF_VMCommWaitAll()` can be used for simplicity.

```
  call ESMF_VMEpochEnter(epoch=ESMF_VMEPOCH_BUFFER, rc=rc)

  call ESMF_VMCommWaitAll(vm, rc=rc)

  call ESMF_VMEpochExit(rc=rc)
```

52.3.13 Using VM communication methods with data of rank greater than one

In the current implementation of the VM communication methods all the data array arguments are declared as *assumed shape* dummy arrays of rank one. The assumed shape flavor was chosen in order to minimize the chance of copy in/out problems, associated with the other options for declaring the dummy data arguments. However, currently the interfaces are not overloaded for higher ranks. This restriction requires that users that need to communicate data arrays with rank greater than one, must only pass the first dimension of the data array into the VM communication calls. Specifying the full size of the data arrays (considering *all* dimensions) ensure that the complete data is transferred in or out of the contiguous array memory.

```
integer, allocatable:: sendData(:,:)
integer, allocatable:: recvData(:,:,:,:)

count1 = 5
count2 = 8
allocate(sendData(count1,count2)) ! 5 x 8 = 40 elements
do j=1, count2
  do i=1, count1
    sendData(i,j) = localPet*100 + i + (j-1)*count1
  enddo
enddo

count1 = 2
count2 = 5
count3 = 1
count4 = 4
allocate(recvData(count1,count2,count3,count4)) ! 2 x 5 x 1 x 4 = 40 elements
do l=1, count4
  do k=1, count3
    do j=1, count2
      do i=1, count1
        recvData(i,j,k,l) = 0
      enddo
    enddo
  enddo
enddo


if (localPet==src) then
  call ESMF_VMSend(vm, &
    sendData=sendData(:,1), & ! 1st dimension as contiguous array section
    count=count1*count2, &    ! total count of elements
    dstPet=dst, rc=rc)
endif

if (localPet==dst) then
  call ESMF_VMRecv(vm, &
    recvData=recvData(:,1,1,1), & ! 1st dimension as contiguous array section
    count=count1*count2*count3*count4, &  ! total count of elements
    srcPet=src, rc=rc)
endif
```

52.4 Restrictions and Future Work

1. **Only array section syntax that leads to contiguous sub sections is supported**. The source and destination arguments in VM communication calls must reference contiguous data arrays. Fortran array sections are not guaranteed to be contiguous in all cases.

2. **Non-blocking `Reduce()` operations *not* implemented.** None of the reduce communication calls have an implementation for the non-blocking feature. This affects:

   - `ESMF_VMAllFullReduce()`,
   - `ESMF_VMAllReduce()`,
   - `ESMF_VMReduce()`.

3. **Limitations when using `mpiuni` mode.** In `mpiuni` mode non-blocking communications are limited to one outstanding message per source-destination PET pair. Furthermore, in `mpiuni` mode the message length must be smaller than the internal ESMF buffer size.

4. **Alternative communication paths not accessible.** All user accessible VM communication calls are currently implemented using MPI-1.2. VM's implementation of alternative communication techniques, such as shared memory between threaded PETs and POSIX IPC between PETs located on the same single system image, are currently inaccessible to the user. (One exception to this is the `mpiuni` case for which the VM automatically utilizes a shared memory path.)

5. **Data arrays in VM comm calls are *assumed shape* with rank=1.** Currently all dummy arrays in VM comm calls are defined as *assumed shape* arrays of rank=1. The motivation for this choice is that the use of assumed shape dummy arrays guards against the Fortran copy in/out problem. However it may not be as flexible as desired from the user perspective. Alternatively all dummy arrays could be defined as *assumed size* arrays, as it is done in most MPI implementations, allowing arrays of various rank to be passed into the comm methods. Arrays of higher rank can be passed into the current interfaces using Fortran array syntax. This approach is explained in section 52.3.13.

6. **Limitations when using VMEpoch.** Using a blocking collective call (e.g. `ESMF_VMBroadcast()`, the `MPI_Bcast()` used by `ESMF_InfoBroadcast()`, etc.) within the region enclosed by `ESMF_VMEpochEnter()` and `ESMF_VMEpochExit()` will result in a deadlock.

52.5 Design and Implementation Notes

The VM class provides an additional layer of abstraction on top of the POSIX machine model, making it suitable for HPC applications. There are four key aspects the VM class deals with.

1. Encapsulation of hardware and operating system details within the concept of Persistent Execution Threads (PETs).

2. Resource management in terms of PETs with a guard against over-subscription.

3. Topological description of the underlying configuration of the compute resources in terms of PETs.

4. Transparent communication API for point-to-point and collective PET-based primitives, hiding the many different communication channels and offering best possible performance.

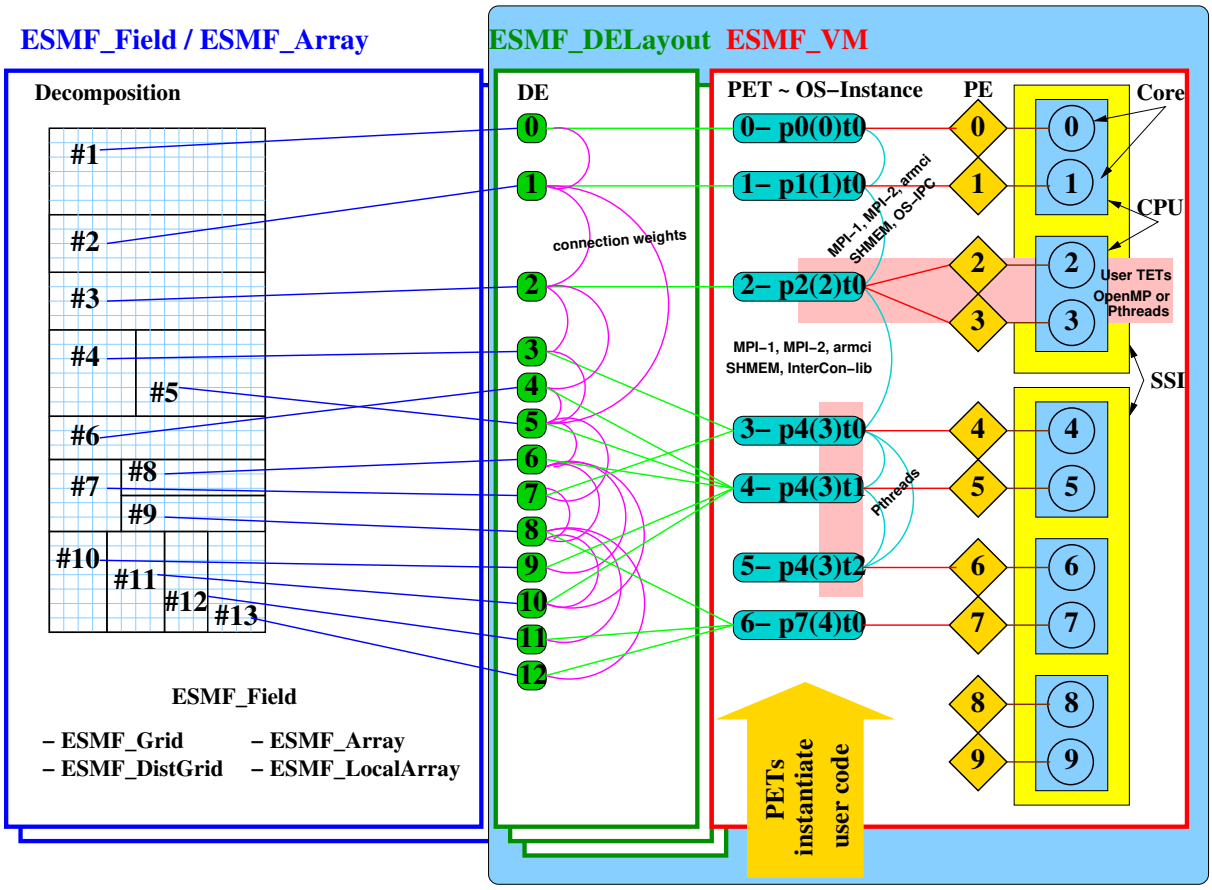

Definition of terms used in the diagram

- PE: A processing element (PE) is an alias for the smallest physical processing unit available on a particular hardware platform. In the language of today's microprocessor architecture technology a PE is identical to a core, however, if future microprocessor designs change the smallest physical processing unit the mapping of the PE to actual hardware will change accordingly. Thus the PE layer separates the hardware specific part of the VM from the hardware-independent part. Each PE is labeled with an id number which identifies it uniquely within all of the VM instances of an ESMF application.

- Core: A Core is the smallest physical processing unit which typically comprises a register set, an integer arithmetic unit, a floating-point unit and various control units. Each Core is labeled with an id number which identifies it uniquely within all of the VM instances of an ESMF application.

- CPU: The central processing unit (CPU) houses single or multiple cores, providing them with the interface to system memory, interconnects and I/O. Typically the CPU provides some level of caching for the instruction and data streams in and out of the Cores. Cores in a multi-core CPU typically share some caches. Each CPU is labeled with an id number which identifies it uniquely within all of the VM instances of an ESMF application.

- SSI: A single system image (SSI) spans all the CPUs controlled by a single running instance of the operating system. SMP and NUMA are typical multi-CPU SSI architectures. Each SSI is labeled with an id number which identifies it uniquely within all of the VM instances of an ESMF application.

- TOE: A thread of execution (TOE) executes an instruction sequence. TOE's come in two flavors: PET and TET.

- PET: A persistent execution thread (PET) executes an instruction sequence on an associated set of data. The PET has a lifetime at least as long as the associated data set. In ESMF the PET is the central concept of abstraction provided by the VM class. The PETs of an VM object are labeled from 0 to N-1 where N is the total number of PETs in the VM object.
- TET: A transient execution thread (TET) executes an instruction sequence on an associated set of data. A TET's lifetime might be shorter than that of the associated data set.
- OS-Instance: The OS-Instance of a TOE describes how a particular TOE is instantiated on the OS level. Using POSIX terminology a TOE will run as a single thread within a single- or multi-threaded process.
- Pthreads: Communication via the POSIX Thread interface.
- MPI-1, MPI-2: Communication via MPI standards 1 and 2.
- armci: Communication via the aggregate remote memory copy interface.
- SHMEM: Communication via the SHMEM interface.
- OS-IPC: Communication via the operating system's inter process communication interface. Either POSIX IPC or System V IPC.
- InterCon-lib: Communication via the interconnect's library native interface. An example is the Elan library for Quadrics.

The POSIX machine abstraction, while a very powerful concept, needs augmentation when applied to HPC applications. Key elements of the POSIX abstraction are processes, which provide virtually unlimited resources (memory, I/O, sockets, ...) to possibly multiple threads of execution. Similarly POSIX threads create the illusion that there is virtually unlimited processing power available to each POSIX process. While the POSIX abstraction is very suitable for many multi-user/multi-tasking applications that need to share limited physical resources, it does not directly fit the HPC workload where over-subscription of resources is one of the most expensive modes of operation.

ESMF's virtual machine abstraction is based on the POSIX machine model but holds additional information about the available physical processing units in terms of Processing Elements (PEs). A PE is the smallest physical processing unit and encapsulates the hardware details (Cores, CPUs and SSIs).

There is exactly one physical machine layout for each application, and all VM instances have access to this information. The PE is the smallest processing unit which, in today's microprocessor technology, corresponds to a single Core. Cores are arranged in CPUs which in turn are arranged in SSIs. The setup of the physical machine layout is part of the ESMF initialization process.

On top of the PE concept the key abstraction provided by the VM is the PET. All user code is executed by PETs while OS and hardware details are hidden. The VM class contains a number of methods which allow the user to prescribe how the PETs of a desired virtual machine should be instantiated on the OS level and how they should map onto the hardware. This prescription is kept in a private virtual machine plan object which is created at the same time the associated component is being created. Each time component code is entered through one of the component's registered top–level methods (Initialize/Run/Finalize), the virtual machine plan along with a pointer to the respective user function is used to instantiate the user code on the PETs of the associated VM in form of single- or multi-threaded POSIX processes.

The process of starting, entering, exiting and shutting down a VM is very transparent, all spawning and joining of threads is handled by VM methods "behind the scenes". Furthermore, fundamental synchronization and communication primitives are provided on the PET level through a uniform API, hiding details related to the actual instantiation of the participating PETs.

Within a VM object each PE of the physical machine maps to 0 or 1 PETs. Allowing unassigned PEs provides a means to prevent over-subscription between multiple concurrently running virtual machines. Similarly a maximum of one PET per PE prevents over-subscription within a single VM instance. However, over-subscription is possible by subscribing PETs from different virtual machines to the same PE. This type of over-subscription can be desirable for PETs associated with I/O workloads expected to be used infrequently and to block often on I/O requests.

On the OS level each PET of a VM object is represented by a POSIX thread (Pthread) either belonging to a single– or multi–threaded process and maps to at least 1 PE of the physical machine, ensuring its execution. Mapping a single PET to multiple PEs provides resources for user–level multi–threading, in which case the user code inquires how many PEs are associated with its PET and if there are multiple PEs available the user code can spawn an equal number of threads (e.g. OpenMP) without risking over-subscription. Typically these user spawned threads are short-lived and used for fine-grained parallelization in form of TETs. All PEs mapped against a single PET must be part of a unique SSI in order to allow user–level multi–threading!

In addition to discovering the physical machine the ESMF initialization process sets up the default global virtual machine. This VM object, which is the ultimate parent of all VMs created during the course of execution, contains as many PETs as there are PEs in the physical machine. All of its PETs are instantiated in form of single-threaded MPI processes and a 1:1 mapping of PETs to PEs is used for the default global VM.

The VM design and implementation is based on the POSIX process and thread model as well as the MPI-1.2 standard. As a consequence of the latter standard the number of processes is static during the course of execution and is determined at start-up. The VM implementation further requires that the user starts up the ESMF application with as many MPI processes as there are PEs in the available physical machine using the platform dependent mechanism to ensure proper process placement.

All MPI processes participating in a VM are grouped together by means of an MPI_Group object and their context is defined via an MPI_Comm object (MPI intra-communicator). The PET local process id within each virtual machine is equal to the MPI_Comm_rank in the local MPI_Comm context whereas the PET process id is equal to the MPI_Comm_rank in MPI_COMM_WORLD. The PET process id is used within the VM methods to determine the virtual memory space a PET is operating in.

In order to provide a migration path for legacy MPI-applications the VM offers accessor functions to its MPI_Comm object. Once obtained this object may be used in explicit user-code MPI calls within the same context.

52.6 Class API

52.6.1 ESMF_VMAssignment(=) - VM assignment

INTERFACE:

```
interface assignment(=)
vm1 = vm2
```

ARGUMENTS:

```
type(ESMF_VM) :: vm1
type(ESMF_VM) :: vm2
```

STATUS:

- This interface is backward compatible with ESMF versions starting at 5.2.0r. If code using this interface compiles with any version of ESMF starting with 5.2.0r, then it will compile with the current version.

DESCRIPTION:

Assign vm1 as an alias to the same ESMF VM object in memory as vm2. If vm2 is invalid, then vm1 will be equally invalid after the assignment.

The arguments are:

vm1 The `ESMF_VM` object on the left hand side of the assignment.

vm2 The `ESMF_VM` object on the right hand side of the assignment.

52.6.2 ESMF_VMOperator(==) - VM equality operator

INTERFACE:

```
interface operator(==)
  if (vm1 == vm2) then ... endif
            OR
  result = (vm1 == vm2)
```

RETURN VALUE:

```
logical :: result
```

ARGUMENTS:

```
type(ESMF_VM), intent(in) :: vm1
type(ESMF_VM), intent(in) :: vm2
```

STATUS:

- This interface is backward compatible with ESMF versions starting at 5.2.0r. If code using this interface compiles with any version of ESMF starting with 5.2.0r, then it will compile with the current version.

DESCRIPTION:

Test whether vm1 and vm2 are valid aliases to the same ESMF VM object in memory. For a more general comparison of two ESMF VMs, going beyond the simple alias test, the ESMF_VMMatch() function (not yet implemented) must be used.

The arguments are:

vm1 The `ESMF_VM` object on the left hand side of the equality operation.

vm2 The `ESMF_VM` object on the right hand side of the equality operation.

52.6.3 ESMF_VMOperator(/=) - VM not equal operator

INTERFACE:

```
interface operator(/=)
  if (vm1 /= vm2) then ... endif
            OR
  result = (vm1 /= vm2)
```

RETURN VALUE:

```
logical :: result
```

ARGUMENTS:

```
type(ESMF_VM), intent(in) :: vm1
type(ESMF_VM), intent(in) :: vm2
```

STATUS:

- This interface is backward compatible with ESMF versions starting at 5.2.0r. If code using this interface compiles with any version of ESMF starting with 5.2.0r, then it will compile with the current version.

DESCRIPTION:

Test whether vm1 and vm2 are *not* valid aliases to the same ESMF VM object in memory. For a more general comparison of two ESMF VMs, going beyond the simple alias test, the ESMF_VMMatch() function (not yet implemented) must be used.

The arguments are:

vm1 The `ESMF_VM` object on the left hand side of the non-equality operation.

vm2 The `ESMF_VM` object on the right hand side of the non-equality operation.

52.6.4 ESMF_VMAllFullReduce - Fully reduce data across VM, result on all PETs

INTERFACE:

```
subroutine ESMF_VMAllFullReduce(vm, sendData, recvData, &
  count, reduceflag, syncflag, commhandle, rc)
```

ARGUMENTS:

```
type(ESMF_VM),                      intent(in)            :: vm
<type>(ESMF_KIND_<kind>), target, intent(in)            :: sendData(:)
```

```
    <type>(ESMF_KIND_<kind>),         intent(out)           :: recvData
    integer,                          intent(in)            :: count
    type(ESMF_Reduce_Flag),           intent(in)            :: reduceflag
-- The following arguments require argument keyword syntax (e.g. rc=rc). --
    type(ESMF_Sync_Flag),             intent(in),  optional :: syncflag
    type(ESMF_CommHandle),            intent(out), optional :: commhandle
    integer,                          intent(out), optional :: rc
```

STATUS:

- This interface is backward compatible with ESMF versions starting at 5.2.0r. If code using this interface compiles with any version of ESMF starting with 5.2.0r, then it will compile with the current version.

DESCRIPTION:

Collective `ESMF_VM` communication call that reduces a contiguous data array of <type><kind> across the `ESMF_VM` object into a single value of the same <type><kind>. The result is returned on all PETs. Different reduction operations can be specified.

This method is overloaded for: `ESMF_TYPEKIND_I4`, `ESMF_TYPEKIND_I8`, `ESMF_TYPEKIND_R4`, `ESMF_TYPEKIND_R8`.

TODO: The current version of this method does not provide an implementation of the *non-blocking* feature. When calling this method with `syncflag = ESMF_SYNC_NONBLOCKING`, error code `ESMF_RC_NOT_IMPL` will be returned and an error will be logged.

The arguments are:

vm `ESMF_VM` object.

sendData Contiguous data array holding data to be sent. All PETs must specify a valid source array.

recvData Single data variable to be received. All PETs must specify a valid result variable.

count Number of elements in sendData. Allowed to be different across the PETs, as long as `count` > 0.

reduceflag Reduction operation. See section 55.49 for a list of valid reduce operations.

[syncflag] Flag indicating whether this call behaves blocking or non-blocking. The default is `ESMF_SYNC_BLOCKING`. See section 55.59 for a complete list of options.

[commhandle] If present, a communication handle will be returned in case of a non-blocking request (see argument `syncflag`). The `commhandle` can be used in `ESMF_VMCommWait()` to block the calling PET until the communication call has finished PET-locally. If no `commhandle` was supplied to a non-blocking call the VM method `ESMF_VMCommWaitAll()` may be used to block on all currently queued communication calls of the VM context.

[rc] Return code; equals `ESMF_SUCCESS` if there are no errors.

52.6.5 ESMF_VMAllGather - Gather data across VM, result on all PETs

INTERFACE:

```
subroutine ESMF_VMAllGather(vm, sendData, recvData, count, &
  syncflag, commhandle, rc)
```

ARGUMENTS:

```
  type(ESMF_VM),                      intent(in)            :: vm
  <type>(ESMF_KIND_<kind>), target, intent(in)            :: sendData(:)
  <type>(ESMF_KIND_<kind>), target, intent(out)           :: recvData(:)
  integer,                            intent(in)            :: count
-- The following arguments require argument keyword syntax (e.g. rc=rc). --
  type(ESMF_Sync_Flag),               intent(in),  optional :: syncflag
  type(ESMF_CommHandle),              intent(out), optional :: commhandle
  integer,                            intent(out), optional :: rc
```

STATUS:

- This interface is backward compatible with ESMF versions starting at 5.2.0r. If code using this interface compiles with any version of ESMF starting with 5.2.0r, then it will compile with the current version.

DESCRIPTION:

Collective `ESMF_VM` communication call that gathers contiguous data of <type><kind> from all PETs of an `ESMF_VM` object into an array on each PET. The data received in `recvData` is identical across all PETs. The `count` elements sent from the `sendData` array on PET `i` are stored contiguously in the `recvData` array starting at position $\texttt{i} \times \texttt{count} + 1$.

This method is overloaded for: `ESMF_TYPEKIND_I4`, `ESMF_TYPEKIND_I8`, `ESMF_TYPEKIND_R4`, `ESMF_TYPEKIND_R8`, `ESMF_TYPEKIND_LOGICAL`.

The arguments are:

vm `ESMF_VM` object.

sendData Contiguous data array holding data to be sent. All PETs must specify a valid source array. The first `count` elements on each PET are sent.

recvData Contiguous data array for data to be received. All PETs must specify a valid `recvData` argument large enough to accommodate the received data.

count Number of elements to be gathered from each PET. Must be the same on all PETs.

[syncflag] Flag indicating whether this call behaves blocking or non-blocking. The default is `ESMF_SYNC_BLOCKING`. See section 55.59 for a complete list of options.

[commhandle] If present, a communication handle will be returned in case of a non-blocking request (see argument `syncflag`). The `commhandle` can be used in `ESMF_VMCommWait()` to block the calling PET until the communication call has finished PET-locally. If no `commhandle` was supplied to a non-blocking call the VM method `ESMF_VMCommWaitAll()` may be used to block on all currently queued communication calls of the VM context.

[rc] Return code; equals `ESMF_SUCCESS` if there are no errors.

52.6.6 ESMF_VMAllGatherV - GatherV data across VM, result on all PETs

INTERFACE:

```
subroutine ESMF_VMAllGatherV(vm, sendData, sendCount, &
  recvData, recvCounts, recvOffsets, syncflag, commhandle, rc)
```

ARGUMENTS:

```
  type(ESMF_VM),                      intent(in)            :: vm
  <type>(ESMF_KIND_<kind>), target, intent(in)            :: sendData(:)
  integer,                            intent(in)            :: sendCount
  <type>(ESMF_KIND_<kind>), target, intent(out)           :: recvData(:)
  integer,                            intent(in)            :: recvCounts(:)
  integer,                            intent(in)            :: recvOffsets(:)
-- The following arguments require argument keyword syntax (e.g. rc=rc). --
  type(ESMF_Sync_Flag),               intent(in),  optional :: syncflag
  type(ESMF_CommHandle),              intent(out), optional :: commhandle
  integer,                            intent(out), optional :: rc
```

STATUS:

- This interface is backward compatible with ESMF versions starting at 5.2.0r. If code using this interface compiles with any version of ESMF starting with 5.2.0r, then it will compile with the current version.

DESCRIPTION:

Collective `ESMF_VM` communication call that gathers contiguous data of <type><kind> from all PETs of an `ESMF_VM` object into an array on each PET. The data received in `recvData` is identical across all PETs. The `sendCount` elements sent from the `sendData` array on PET `i` are stored contiguously in the `recvData` array starting at position `recvOffsets(i)`.

This method is overloaded for: `ESMF_TYPEKIND_I4`, `ESMF_TYPEKIND_I8`, `ESMF_TYPEKIND_R4`, `ESMF_TYPEKIND_R8`.

TODO: The current version of this method does not provide an implementation of the *non-blocking* feature. When calling this method with `syncflag = ESMF_SYNC_NONBLOCKING`, error code `ESMF_RC_NOT_IMPL` will be returned and an error will be logged.

The arguments are:

vm `ESMF_VM` object.

sendData Contiguous data array holding data to be sent. All PETs must specify a valid source array.

sendCount Number of `sendData` elements to send from local PET to all other PETs.

recvData Contiguous data array for data to be received. All PETs must specify a valid `recvData` argument large enough to accommodate the received data.

recvCounts Number of `recvData` elements to be received from the corresponding source PET.

recvOffsets Offsets in units of elements in `recvData` marking the start of element sequence to be received from source PET.

[syncflag] Flag indicating whether this call behaves blocking or non-blocking. The default is `ESMF_SYNC_BLOCKING`. See section 55.59 for a complete list of options.

[commhandle] If present, a communication handle will be returned in case of a non-blocking request (see argument `syncflag`). The `commhandle` can be used in `ESMF_VMCommWait()` to block the calling PET until the communication call has finished PET-locally. If no `commhandle` was supplied to a non-blocking call the VM method `ESMF_VMCommWaitAll()` may be used to block on all currently queued communication calls of the VM context.

[rc] Return code; equals `ESMF_SUCCESS` if there are no errors.

52.6.7 ESMF_VMAllReduce - Reduce data across VM, result on all PETs

INTERFACE:

```
subroutine ESMF_VMAllReduce(vm, sendData, recvData, count, &
  reduceflag, syncflag, commhandle, rc)
```

ARGUMENTS:

```
  type(ESMF_VM),                     intent(in)            :: vm
  <type>(ESMF_KIND_<kind>), target, intent(in)            :: sendData(:)
  <type>(ESMF_KIND_<kind>), target, intent(out)           :: recvData(:)
  integer,                           intent(in)            :: count
  type(ESMF_Reduce_Flag),            intent(in)            :: reduceflag
-- The following arguments require argument keyword syntax (e.g. rc=rc). --
  type(ESMF_Sync_Flag),              intent(in),  optional :: syncflag
  type(ESMF_CommHandle),             intent(out), optional :: commhandle
  integer,                           intent(out), optional :: rc
```

STATUS:

- This interface is backward compatible with ESMF versions starting at 5.2.0r. If code using this interface compiles with any version of ESMF starting with 5.2.0r, then it will compile with the current version.

DESCRIPTION:

Collective `ESMF_VM` communication call that reduces a contiguous data array across the `ESMF_VM` object into a contiguous data array of the same <type><kind>. The result array is returned on all PETs. Different reduction operations can be specified.

This method is overloaded for: `ESMF_TYPEKIND_I4`, `ESMF_TYPEKIND_I8`, `ESMF_TYPEKIND_R4`, `ESMF_TYPEKIND_R8`.

TODO: The current version of this method does not provide an implementation of the *non-blocking* feature. When calling this method with `syncflag = ESMF_SYNC_NONBLOCKING`, error code `ESMF_RC_NOT_IMPL` will be returned and an error will be logged.

The arguments are:

vm `ESMF_VM` object.

sendData Contiguous data array holding data to be sent. All PETs must specify a valid source array.

recvData Contiguous data array for data to be received. All PETs must specify a valid `recvData` argument.

count Number of elements in sendData and recvData. Must be the same on all PETs.

reduceflag Reduction operation. See section 55.49 for a list of valid reduce operations.

[syncflag] Flag indicating whether this call behaves blocking or non-blocking. The default is `ESMF_SYNC_BLOCKING`. See section 55.59 for a complete list of options.

[commhandle] If present, a communication handle will be returned in case of a non-blocking request (see argument `syncflag`). The `commhandle` can be used in `ESMF_VMCommWait()` to block the calling PET until the communication call has finished PET-locally. If no `commhandle` was supplied to a non-blocking call the VM method `ESMF_VMCommWaitAll()` may be used to block on all currently queued communication calls of the VM context.

[rc] Return code; equals `ESMF_SUCCESS` if there are no errors.

52.6.8 ESMF_VMAllToAll - AllToAll communications across VM

INTERFACE:

```
subroutine ESMF_VMAllToAll(vm, sendData, sendCount, &
  recvData, recvCount, syncflag, &
  commhandle, rc)
```

ARGUMENTS:

```
  type(ESMF_VM),                     intent(in)            :: vm
  <type>(ESMF_KIND_<kind>), target, intent(in)            :: sendData(:)
  integer,                           intent(in)            :: sendCount
  <type>(ESMF_KIND_<kind>), target, intent(out)           :: recvData(:)
  integer,                           intent(in)            :: recvCount
-- The following arguments require argument keyword syntax (e.g. rc=rc). --
  type(ESMF_Sync_Flag),              intent(in),  optional :: syncflag
  type(ESMF_CommHandle),             intent(out), optional :: commhandle
  integer,                           intent(out), optional :: rc
```

STATUS:

- This interface is backward compatible with ESMF versions starting at 5.3.0r. If code using this interface compiles with any version of ESMF starting with 5.3.0r, then it will compile with the current version.

DESCRIPTION:

Collective `ESMF_VM` communication call that performs a total exchange operation on the contiguous data of <type><kind>. PET `i` sends contiguous `sendCount` elements of its `sendData` array to every PET, including itself. The `sendCount` elements sent to PET `j` are those starting at position `j` $\times$ `sendCount` $+ 1$, and are stored in `recvData` on PET j in position `i` $\times$ `recvCount` $+ 1$.

This method is overloaded for: ESMF_TYPEKIND_I4, ESMF_TYPEKIND_I8, ESMF_TYPEKIND_R4, ESMF_TYPEKIND_R8.

TODO: The current version of this method does not provide an implementation of the *non-blocking* feature. When calling this method with syncflag = ESMF_SYNC_NONBLOCKING, error code ESMF_RC_NOT_IMPL will be returned and an error will be logged.

The arguments are:

vm ESMF_VM object.

sendData Contiguous data array holding data to be sent. All PETs must specify a valid source array.

sendCount Number of sendData elements to send from local PET to each destination PET.

recvData Contiguous data array for data to be received. All PETs must specify a valid recvData argument large enough to accommodate the received data.

recvCount Number of recvData elements to be received by local PET from each source PET.

[syncflag] Flag indicating whether this call behaves blocking or non-blocking. The default is ESMF_SYNC_BLOCKING. See section 55.59 for a complete list of options.

[commhandle] If present, a communication handle will be returned in case of a non-blocking request (see argument syncflag). The commhandle can be used in ESMF_VMCommWait() to block the calling PET until the communication call has finished PET-locally. If no commhandle was supplied to a non-blocking call the VM method ESMF_VMCommWaitAll() may be used to block on all currently queued communication calls of the VM context.

[rc] Return code; equals ESMF_SUCCESS if there are no errors.

52.6.9 ESMF_VMAllToAllV - AllToAllV communications across VM

INTERFACE:

```
    subroutine ESMF_VMAllToAllV(vm, sendData, sendCounts, &
      sendOffsets, recvData, recvCounts, recvOffsets, syncflag, &
      commhandle, rc)
```

ARGUMENTS:

```
      type(ESMF_VM),                     intent(in)            :: vm
      <type>(ESMF_KIND_<kind>), target, intent(in)            :: sendData(:)
      integer,                           intent(in)            :: sendCounts(:)
      integer,                           intent(in)            :: sendOffsets(:)
      <type>(ESMF_KIND_<kind>), target, intent(out)           :: recvData(:)
      integer,                           intent(in)            :: recvCounts(:)
      integer,                           intent(in)            :: recvOffsets(:)
 -- The following arguments require argument keyword syntax (e.g. rc=rc). --
      type(ESMF_Sync_Flag),              intent(in),  optional :: syncflag
      type(ESMF_CommHandle),             intent(out), optional :: commhandle
      integer,                           intent(out), optional :: rc
```

STATUS:

- This interface is backward compatible with ESMF versions starting at 5.2.0r. If code using this interface compiles with any version of ESMF starting with 5.2.0r, then it will compile with the current version.

DESCRIPTION:

Collective `ESMF_VM` communication call that performs a total exchange operation on the contiguous data of <type><kind>. PET `i` sends contiguous elements of its `sendData` array to all PETs, including itself. The `sendCounts(j)` elements sent to PET `j` are those starting at position `sendOffsets(j)`, and are stored in `recvData` on PET j in position `recvOffsets(i)`.

This method is overloaded for: `ESMF_TYPEKIND_I4`, `ESMF_TYPEKIND_I8`, `ESMF_TYPEKIND_R4`, `ESMF_TYPEKIND_R8`, `ESMF_TYPEKIND_LOGICAL`.

TODO: The current version of this method does not provide an implementation of the *non-blocking* feature. When calling this method with `syncflag = ESMF_SYNC_NONBLOCKING`, error code `ESMF_RC_NOT_IMPL` will be returned and an error will be logged.

The arguments are:

vm `ESMF_VM` object.

sendData Contiguous data array holding data to be sent. All PETs must specify a valid source array.

sendCounts Number of `sendData` elements to send from local PET to destination PET.

sendOffsets Offsets in units of elements in `sendData` marking to start of element sequence to be sent from local PET to destination PET.

recvData Contiguous data array for data to be received. All PETs must specify a valid `recvData` argument large enough to accommodate the received data.

recvCounts Number of `recvData` elements to be received by local PET from source PET.

recvOffsets Offsets in units of elements in `recvData` marking to start of element sequence to be received by local PET from source PET.

[syncflag] Flag indicating whether this call behaves blocking or non-blocking. The default is `ESMF_SYNC_BLOCKING`. See section 55.59 for a complete list of options.

[commhandle] If present, a communication handle will be returned in case of a non-blocking request (see argument `syncflag`). The `commhandle` can be used in `ESMF_VMCommWait()` to block the calling PET until the communication call has finished PET-locally. If no `commhandle` was supplied to a non-blocking call the VM method `ESMF_VMCommWaitAll()` may be used to block on all currently queued communication calls of the VM context.

[rc] Return code; equals `ESMF_SUCCESS` if there are no errors.

52.6.10 ESMF_VMBarrier - VM wide barrier

INTERFACE:

```
subroutine ESMF_VMBarrier(vm, rc)
```

ARGUMENTS:

```
     type(ESMF_VM),  intent(in),  optional :: vm
 -- The following arguments require argument keyword syntax (e.g. rc=rc). --
     integer,        intent(out), optional :: rc
```

STATUS:

- This interface is backward compatible with ESMF versions starting at 5.2.0r. If code using this interface compiles with any version of ESMF starting with 5.2.0r, then it will compile with the current version.
- This interface was modified since ESMF version 5.2.0r. The fact that code using this interface compiles with the current ESMF version does not guarantee that it compiles with previous versions of this interface. If user code compatibility with version 5.2.0r is desired then care must be taken to limit the use of this interface to features that were available in the 5.2.0r release.
  Changes made after the 5.2.0r release:

  8.1.0 Made argument `vm` optional to simplify usage when calling on the current VM.

DESCRIPTION:

Collective `ESMF_VM` communication call that blocks calling PET until all PETs of the VM context have issued the call.

The arguments are:

[vm] `ESMF_VM` object. Default use current VM.

[rc] Return code; equals `ESMF_SUCCESS` if there are no errors.

52.6.11 ESMF_VMBroadcast - Broadcast data across VM

INTERFACE:

```
    subroutine ESMF_VMBroadcast(vm, bcstData, count, rootPet, &
      syncflag, commhandle, rc)
```

ARGUMENTS:

```
      type(ESMF_VM),                     intent(in)            :: vm
      <type>(ESMF_KIND_<kind>), target,  intent(inout)         :: bcstData(:)
      integer,                           intent(in)            :: count
      integer,                           intent(in)            :: rootPet
 -- The following arguments require argument keyword syntax (e.g. rc=rc). --
      type(ESMF_Sync_Flag),              intent(in),  optional :: syncflag
      type(ESMF_CommHandle),             intent(out), optional :: commhandle
      integer,                           intent(out), optional :: rc
```

STATUS:

- This interface is backward compatible with ESMF versions starting at 5.2.0r. If code using this interface compiles with any version of ESMF starting with 5.2.0r, then it will compile with the current version.

DESCRIPTION:

Collective ESMF_VM communication call that broadcasts a contiguous data array of <type><kind> from rootPet to all other PETs of the ESMF_VM object. When the call returns, the bcstData array on all PETs contains the same data as on rootPet.

This method is overloaded for: ESMF_TYPEKIND_I4, ESMF_TYPEKIND_I8, ESMF_TYPEKIND_R4, ESMF_TYPEKIND_R8, ESMF_TYPEKIND_LOGICAL, ESMF_TYPEKIND_CHARACTER.

The arguments are:

vm ESMF_VM object.

bcstData Contiguous data array. On rootPet bcstData holds data that is to be broadcasted to all other PETs. On all other PETs bcstData is used to receive the broadcasted data and must be large enough to accommodate the received data.

count Number of elements in /bcstData. Must be the same on all PETs.

rootPet PET that holds data that is being broadcast.

[syncflag] Flag indicating whether this call behaves blocking or non-blocking. The default is ESMF_SYNC_BLOCKING. See section 55.59 for a complete list of options.

[commhandle] If present, a communication handle will be returned in case of a non-blocking request (see argument syncflag). The commhandle can be used in ESMF_VMCommWait() to block the calling PET until the communication call has finished PET-locally. If no commhandle was supplied to a non-blocking call the VM method ESMF_VMCommWaitAll() may be used to block on all currently queued communication calls of the VM context.

[rc] Return code; equals ESMF_SUCCESS if there are no errors.

52.6.12 ESMF_VMCommWait - Wait for non-blocking VM communication to complete

INTERFACE:

```
subroutine ESMF_VMCommWait(vm, commhandle, rc)
```

ARGUMENTS:

```
     type(ESMF_VM),          intent(in)             :: vm
     type(ESMF_CommHandle), intent(in)             :: commhandle
 -- The following arguments require argument keyword syntax (e.g. rc=rc). --
     integer,                intent(out), optional :: rc
```

STATUS:

- This interface is backward compatible with ESMF versions starting at 5.2.0r. If code using this interface compiles with any version of ESMF starting with 5.2.0r, then it will compile with the current version.

DESCRIPTION:

Wait for non-blocking VM communication specified by the `commhandle` to complete.

The arguments are:

vm `ESMF_VM` object.

commhandle Handle specifying a previously issued non-blocking communication request.

[rc] Return code; equals `ESMF_SUCCESS` if there are no errors.

52.6.13 ESMF_VMCommWaitAll - Wait for all non-blocking VM comms to complete

INTERFACE:

```
subroutine ESMF_VMCommWaitAll(vm, rc)
```

ARGUMENTS:

```
     type(ESMF_VM), intent(in)            :: vm
 -- The following arguments require argument keyword syntax (e.g. rc=rc). --
     integer,       intent(out), optional :: rc
```

STATUS:

- This interface is backward compatible with ESMF versions starting at 5.2.0r. If code using this interface compiles with any version of ESMF starting with 5.2.0r, then it will compile with the current version.

DESCRIPTION:

Wait for *all* pending non-blocking VM communication within the specified VM context to complete.

The arguments are:

vm `ESMF_VM` object.

[rc] Return code; equals `ESMF_SUCCESS` if there are no errors.

52.6.14 ESMF_VMEpochEnter - Enter an ESMF epoch

INTERFACE:

```
subroutine ESMF_VMEpochEnter(vm, epoch, keepAlloc, throttle, rc)
```

ARGUMENTS:

```
 -- The following arguments require argument keyword syntax (e.g. rc=rc). --
     type(ESMF_VM),            intent(in),  optional :: vm
     type(ESMF_VMEpoch_Flag),  intent(in),  optional :: epoch
     logical,                  intent(in),  optional :: keepAlloc
     integer,                  intent(in),  optional :: throttle
     integer,                  intent(out), optional :: rc
```

DESCRIPTION:

Enter a specific VM epoch. VM epochs change low level communication behavior which can have significant performance implications. It is an error to call `ESMF_VMEpochEnter()` again before exiting a previous epoch with `ESMF_VMEpochExit()`. Also, blocking collective calls (e.g. `ESMF_VMBroadcast()`) should not be used within a VMEpoch region. Doing so will result in a deadlock.

The arguments are:

[vm] `ESMF_VM` object. Defaults to the current VM.

[epoch] The epoch to be entered. See section 52.2.1 for a complete list of options. Defaults to `ESMF_VMEPOCH_NONE`.

[keepAlloc] For `.true.`, keep internal allocations to be reused by consecutive epoch phases. For `.false.`, deallocate all internal buffers not actively used. The flag only affects the local PET. Defaults to `.true.`.

[throttle] Maximum number of outstanding communication calls beween any two PETs. Lower numbers reduce memory pressure at the expense of the level of asynchronizity achievable. Defaults to 10.

[rc] Return code; equals `ESMF_SUCCESS` if there are no errors.

52.6.15 ESMF_VMEpochExit - Exit an ESMF epoch

INTERFACE:

```
subroutine ESMF_VMEpochExit(vm, keepAlloc, rc)
```

ARGUMENTS:

```
 -- The following arguments require argument keyword syntax (e.g. rc=rc). --
     type(ESMF_VM),            intent(in),  optional :: vm
     logical,                  intent(in),  optional :: keepAlloc
     integer,                  intent(out), optional :: rc
```

DESCRIPTION:

Exit the current VM epoch.

The arguments are:

[vm] ESMF_VM object. Defaults to the current VM.

[keepAlloc] For .true., keep internal allocations to be reused by consecutive epoch phases. For .false., deallocate all internal buffers not actively used. The flag only affects the local PET. Defaults to .true..

[rc] Return code; equals ESMF_SUCCESS if there are no errors.

52.6.16 ESMF_VMGather - Gather data from across VM

INTERFACE:

```
subroutine ESMF_VMGather(vm, sendData, recvData, count, rootPet, &
  syncflag, commhandle, rc)
```

ARGUMENTS:

```
  type(ESMF_VM),                      intent(in)            :: vm
  <type>(ESMF_KIND_<kind>), target,   intent(in)            :: sendData(:)
  <type>(ESMF_KIND_<kind>), target,   intent(out)           :: recvData(:)
  integer,                            intent(in)            :: count
  integer,                            intent(in)            :: rootPet
-- The following arguments require argument keyword syntax (e.g. rc=rc). --
  type(ESMF_Sync_Flag),               intent(in),  optional :: syncflag
  type(ESMF_CommHandle),              intent(out), optional :: commhandle
  integer,                            intent(out), optional :: rc
```

STATUS:

- This interface is backward compatible with ESMF versions starting at 5.2.0r. If code using this interface compiles with any version of ESMF starting with 5.2.0r, then it will compile with the current version.

DESCRIPTION:

Collective ESMF_VM communication call that gathers contiguous data of <type><kind> from all PETs of an ESMF_VM object (including the rootPet itself) into an array on rootPet. The count elements sent from the sendData array on PET i are stored contiguously in the recvData array on rootPet starting at position $i \times count + 1$.

This method is overloaded for: ESMF_TYPEKIND_I4, ESMF_TYPEKIND_I8, ESMF_TYPEKIND_R4, ESMF_TYPEKIND_R8, ESMF_TYPEKIND_LOGICAL.

The arguments are:

vm ESMF_VM object.

sendData Contiguous data array holding data to be sent. All PETs must specify a valid source array.

recvData Contiguous data array for data to be received. Only recvData specified by the rootPet will be used by this method, and must be large enough to accommodate the received data.

count Number of elements to be sent from each PET to rootPet. Must be the same on all PETs.

rootPet PET on which data is gathereds.

[syncflag] Flag indicating whether this call behaves blocking or non-blocking. The default is `ESMF_SYNC_BLOCKING`. See section 55.59 for a complete list of options.

[commhandle] If present, a communication handle will be returned in case of a non-blocking request (see argument `syncflag`). The `commhandle` can be used in `ESMF_VMCommWait()` to block the calling PET until the communication call has finished PET-locally. If no `commhandle` was supplied to a non-blocking call the VM method `ESMF_VMCommWaitAll()` may be used to block on all currently queued communication calls of the VM context.

[rc] Return code; equals `ESMF_SUCCESS` if there are no errors.

52.6.17 ESMF_VMGatherV - GatherV data from across VM

INTERFACE:

```
subroutine ESMF_VMGatherV(vm, sendData, sendCount, recvData, &
  recvCounts, recvOffsets, rootPet, rc)
```

ARGUMENTS:

```
  type(ESMF_VM),                      intent(in)            :: vm
  <type>(ESMF_KIND_<kind>), target, intent(in)            :: sendData(:)
  integer,                            intent(in)            :: sendCount
  <type>(ESMF_KIND_<kind>), target, intent(out)           :: recvData(:)
  integer,                            intent(in)            :: recvCounts(:)
  integer,                            intent(in)            :: recvOffsets(:)
  integer,                            intent(in)            :: rootPet
-- The following arguments require argument keyword syntax (e.g. rc=rc). --
  integer,                            intent(out), optional :: rc
```

STATUS:

- This interface is backward compatible with ESMF versions starting at 5.2.0r. If code using this interface compiles with any version of ESMF starting with 5.2.0r, then it will compile with the current version.

DESCRIPTION:

Collective `ESMF_VM` communication call that gathers contiguous data of <type><kind> from all PETs of an `ESMF_VM` object (including the `rootPet` itself) into an array on `rootPet`. The `sendCount` elements sent from the `sendData` array on PET `i` are stored contiguously in the `recvData` array on `rootPet` starting at position `recvOffsets(i)`.

This method is overloaded for: `ESMF_TYPEKIND_I4`, `ESMF_TYPEKIND_I8`, `ESMF_TYPEKIND_R4`, `ESMF_TYPEKIND_R8`.

TODO: The current version of this method does not provide an implementation of the *non-blocking* feature. When calling this method with `syncflag = ESMF_SYNC_NONBLOCKING`, error code `ESMF_RC_NOT_IMPL` will be returned and an error will be logged.

The arguments are:

vm `ESMF_VM` object.

sendData Contiguous data array holding data to be sent. All PETs must specify a valid source array.

sendCount Number of `sendData` elements to send from local PET to all other PETs.

recvData Contiguous data array for data to be received. Only `recvData` specified by the `rootPet` will be used by this method, and must be large enough to accommodate the received data.

recvCounts An integer array (of length group size, specified in VM object) containing number of `recvData` elements to be received from corresponding source PET. This argument is significant only at rootPet.

recvOffsets Offsets in units of elements in `recvData` marking the start of element sequence to be received from source PET.

rootPet PET on which data is gathered.

[rc] Return code; equals `ESMF_SUCCESS` if there are no errors.

52.6.18 ESMF_VMGet - Get general information from a VM

INTERFACE:

```
! Private name; call using ESMF_VMGet()
recursive subroutine ESMF_VMGetDefault(vm, localPet, &
  currentSsiPe, petCount, peCount, ssiCount, ssiMap, ssiMinPetCount, ssiMaxPetCount, &
  ssiLocalPetCount, ssiLocalPet, ssiLocalDevCount, ssiLocalDevList, mpiCommunicator, &
  pthreadsEnabledFlag, openMPEnabledFlag, ssiSharedMemoryEnabledFlag, esmfComm, rc)
```

ARGUMENTS:

```
    type(ESMF_VM),        intent(in)            :: vm
 -- The following arguments require argument keyword syntax (e.g. rc=rc). --
    integer,              intent(out), optional :: localPet
    integer,              intent(out), optional :: currentSsiPe
    integer,              intent(out), optional :: petCount
    integer,              intent(out), optional :: peCount
    integer,              intent(out), optional :: ssiCount
    integer, allocatable, intent(out), optional :: ssiMap(:)
    integer,              intent(out), optional :: ssiMinPetCount
    integer,              intent(out), optional :: ssiMaxPetCount
    integer,              intent(out), optional :: ssiLocalPetCount
    integer,              intent(out), optional :: ssiLocalPet
    integer,              intent(out), optional :: ssiLocalDevCount
    integer, allocatable, intent(out), optional :: ssiLocalDevList(:)
    integer,              intent(out), optional :: mpiCommunicator
    logical,              intent(out), optional :: pthreadsEnabledFlag
    logical,              intent(out), optional :: openMPEnabledFlag
    logical,              intent(out), optional :: ssiSharedMemoryEnabledFlag
    character(:), allocatable, intent(out), optional :: esmfComm
    integer,              intent(out), optional :: rc
```

STATUS:

- This interface is backward compatible with ESMF versions starting at 5.2.0r. If code using this interface compiles with any version of ESMF starting with 5.2.0r, then it will compile with the current version.
- This interface was modified since ESMF version 5.2.0r. The fact that code using this interface compiles with the current ESMF version does not guarantee that it compiles with previous versions of this interface. If user code compatibility with version 5.2.0r is desired then care must be taken to limit the use of this interface to features that were available in the 5.2.0r release.
  Changes made after the 5.2.0r release:

  8.0.0 Added arguments `ssiCount`, `ssiMinPetCount`, `ssiMaxPetCount`, and `ssiLocalPetCount` to provide access to information about how the VM is mapped across the single system images (SSIs) – typically synonymous to nodes – of the compute environment. This information is useful when constructing custom petLists.
  Added argument `ssiSharedMemoryEnabledFlag` that allows the user to query whether ESMF was compiled with support for shared memory access between PETs on the same SSI.

  8.1.0 Added argument `currentSsiPe` for easy query of the current PE within the local SSI that is executing the request.
  Added argument `ssiMap` for a convenient way to obtain a view of the mapping of PETs to single system images across the entire VM.

  8.2.0 Added argument `esmfComm` to provide easy access to the `ESMF_COMM` setting used by the ESMF installation.

  8.6.0 Added arguments `ssiLocalDevCount` and `ssiLocalDevCount` to provide information about devices associated with the VM on the local SSI.
  Added argument `ssiLocalPet` to help with SSI specific assignment between PET and device resources.

DESCRIPTION:

Get internal information about the specified `ESMF_VM` object.

The arguments are:

vm Queried `ESMF_VM` object.

[localPet] Upon return this holds the id of the local PET that issued this call. The valid range of `localPet` is $[0..petCount-1]$. A value of -1 is returned on PETs that are not active under the specified `vm`.

[currentSsiPe] Upon return this holds the id of the PE within the local SSI on which the calling PET (i.e. localPet) is currently executing. If the PET is associated with a set of PEs, or PETs are not pinned, the returned value might change each time the call is made.

[petCount] Upon return this holds the number of PETs running under `vm`.

[peCount] Upon return this holds the number of PEs referenced by `vm`.

[ssiCount] Upon return this holds the number of single system images referenced by `vm`.

[ssiMap] Upon return this array is allocated and holds the single system image id for each PET across the `vm`. The size of `ssiMap` is equal to `petCount`, with lower bound 0 and upper bound `petCount - 1`.

[ssiMinPetCount] Upon return this holds the smallest number of PETs running in the same single system images under `vm`.

[ssiMaxPetCount] Upon return this holds the largest number of PETs running in the same single system images under `vm`.

[ssiLocalPetCount] Upon return this holds the number of PETs running in the same single system as `localPet`.

[ssiLocalPet] Upon return this holds the SSI local index of the executing `localPet`.

[ssiLocalDevCount] Upon return this holds the number of devices associated with this VM on the local single system.

[ssiLocalDevList] Upon return this array is allocated and holds the local device ids of devices associated with this VM. The size of `ssiLocalDevList` is equal to `ssiLocalDevCount`, with lower bound 0 and upper bound `ssiLocalDevCount - 1`. Local device ids can be used to target specific devices using OpenMP, OpenACC, or similar device API.

[mpiCommunicator] Upon return this holds the MPI intra-communicator used by the specified `ESMF_VM` object. This communicator may be used for user-level MPI communications. It is recommended that the user duplicates the communicator via `MPI_Comm_Dup()` in order to prevent any interference with ESMF communications. `MPI_COMM_NULL` is returned on PETs that are not active under the specified `vm`.

[pthreadsEnabledFlag] `.TRUE.` ESMF has been compiled with Pthreads, and the MPI environment supports threading.

`.FALSE.` ESMF has *not* been compiled with Pthreads, or the MPI environment does *not* support threading.

[openMPEnabledFlag] `.TRUE.` ESMF has been compiled with OpenMP.

`.FALSE.` ESMF has *not* been compiled with OpenMP.

[ssiSharedMemoryEnabledFlag] `.TRUE.` ESMF has been compiled to support shared memory access between PETs that are on the same single system image (SSI).

`.FALSE.` ESMF has *not* been compiled to support shared memory access between PETs that are on the same single system image (SSI).

[esmfComm] Upon return this string is allocated to the appropriate size and holds the exact value of the `ESMF_COMM` build environment variable used by the ESMF installation. This provides a convenient way for the user to determine the underlying MPI implementation.

[rc] Return code; equals `ESMF_SUCCESS` if there are no errors.

52.6.19 ESMF_VMGet - Get PET specific information from a VM

INTERFACE:

```
! Private name; call using ESMF_VMGet()
subroutine ESMF_VMGetPetSpecific(vm, pet, peCount, &
  accDeviceCount, &   ! DEPRECATED ARGUMENT
  ssiId, threadCount, threadId, vas, rc)
```

ARGUMENTS:

```
     type(ESMF_VM), intent(in)            :: vm
     integer,       intent(in)            :: pet
 -- The following arguments require argument keyword syntax (e.g. rc=rc). --
     integer,       intent(out), optional :: peCount
     integer,       intent(out), optional :: accDeviceCount ! DEPRECATED ARGUMENT
     integer,       intent(out), optional :: ssiId
     integer,       intent(out), optional :: threadCount
```

```
integer,        intent(out), optional :: threadId
integer,        intent(out), optional :: vas
integer,        intent(out), optional :: rc
```

STATUS:

- This interface is backward compatible with ESMF versions starting at 5.2.0r. If code using this interface compiles with any version of ESMF starting with 5.2.0r, then it will compile with the current version.
- This interface was modified since ESMF version 5.2.0r. The fact that code using this interface compiles with the current ESMF version does not guarantee that it compiles with previous versions of this interface. If user code compatibility with version 5.2.0r is desired then care must be taken to limit the use of this interface to features that were available in the 5.2.0r release.
  Changes made after the 5.2.0r release:

  7.0.0 Added argument `accDeviceCount`. The argument provides access to the number of available accelerator devices.

  8.6.0 Started deprecation of argument `accDeviceCount` in favor of the new arguments `ssiLocalDevCount` and `ssiLocalDevList` offered by the general `ESMF_VMGet()` method.

DESCRIPTION:

Get internal information about a specific PET within an `ESMF_VM` object.

The arguments are:

vm Queried `ESMF_VM` object.

pet Queried PET id within the specified `ESMF_VM` object.

[peCount] Upon return this holds the number of PEs associated with the specified PET in the `ESMF_VM` object.

[accDeviceCount] Upon return this holds the number of accelerated devices accessible from the specified PET in the `ESMF_VM` object. **DEPRECATED ARGUMENT!** Please use the argument `ssiLocalDevCount` instead.

[ssiId] Upon return this holds the id of the single-system image (SSI) the specified PET is running on.

[threadCount] Upon return this holds the number of PETs in the specified PET"s thread group.

[threadId] Upon return this holds the thread id of the specified PET within the PET"s thread group.

[vas] Virtual address space in which this PET operates.

[rc] Return code; equals `ESMF_SUCCESS` if there are no errors.

52.6.20 ESMF_VMGetGlobal - Get Global VM

INTERFACE:

```
subroutine ESMF_VMGetGlobal(vm, rc)
```

ARGUMENTS:

```
    type(ESMF_VM), intent(out)            :: vm
-- The following arguments require argument keyword syntax (e.g. rc=rc). --
    integer,       intent(out), optional  :: rc
```

STATUS:

- This interface is backward compatible with ESMF versions starting at 5.2.0r. If code using this interface compiles with any version of ESMF starting with 5.2.0r, then it will compile with the current version.

DESCRIPTION:

Get the global `ESMF_VM` object. This is the VM object that is created during `ESMF_Initialize()` and is the ultimate parent of all VM objects in an ESMF application. It is identical to the VM object returned by `ESMF_Initialize(..., vm=vm, ...)`.

The `ESMF_VMGetGlobal()` call provides access to information about the global execution context via the global VM. This call is necessary because ESMF does not created a global ESMF Component during `ESMF_Initialize()` that could be queried for information about the global execution context of an ESMF application.

Usage of `ESMF_VMGetGlobal()` from within Component code is strongly discouraged. ESMF Components should only access their own VM objects through Component methods. Global information, if required by the Component user code, should be passed down to the Component from the driver through the Component calling interface.

The arguments are:

vm Upon return this holds the `ESMF_VM` object of the global execution context.

[rc] Return code; equals `ESMF_SUCCESS` if there are no errors.

52.6.21 ESMF_VMGetCurrent - Get Current VM

INTERFACE:

```
subroutine ESMF_VMGetCurrent(vm, rc)
```

ARGUMENTS:

```
    type(ESMF_VM), intent(out)           :: vm
-- The following arguments require argument keyword syntax (e.g. rc=rc). --
    integer,       intent(out), optional :: rc
```

STATUS:

- This interface is backward compatible with ESMF versions starting at 5.2.0r. If code using this interface compiles with any version of ESMF starting with 5.2.0r, then it will compile with the current version.

DESCRIPTION:

Get the ESMF_VM object of the current execution context. Calling ESMF_VMGetCurrent() within an ESMF Component, will return the same VM object as ESMF_GridCompGet(..., vm=vm, ...) or ESMF_CplCompGet(..., vm=vm, ...).

The main purpose of providing ESMF_VMGetCurrent() is to simplify ESMF adoption in legacy code. Specifically, code that uses MPI_COMM_WORLD deep within its calling tree can easily be modified to use the correct MPI communicator of the current ESMF execution context. The advantage is that these modifications are very local, and do not require wide reaching interface changes in the legacy code to pass down the ESMF component object, or the MPI communicator.

The use of ESMF_VMGetCurrent() is strongly discouraged in newly written Component code. Instead, the ESMF Component object should be used as the appropriate container of ESMF context information. This object should be passed between the subroutines of a Component, and be queried for any Component specific information.

Outside of a Component context, i.e. within the driver context, the call to ESMF_VMGetCurrent() is identical to ESMF_VMGetGlobal().

The arguments are:

vm Upon return this holds the ESMF_VM object of the current execution context.

[rc] Return code; equals ESMF_SUCCESS if there are no errors.

52.6.22 ESMF_VMIsCreated - Check whether a VM object has been created

INTERFACE:

```
function ESMF_VMIsCreated(vm, rc)
```

RETURN VALUE:

```
logical :: ESMF_VMIsCreated
```

ARGUMENTS:

```
     type(ESMF_VM), intent(in)            :: vm
 -- The following arguments require argument keyword syntax (e.g. rc=rc). --
     integer,       intent(out), optional :: rc
```

DESCRIPTION:

Return .true. if the vm has been created. Otherwise return .false.. If an error occurs, i.e. rc /= ESMF_SUCCESS is returned, the return value of the function will also be .false..

The arguments are:

vm ESMF_VM queried.

[rc] Return code; equals ESMF_SUCCESS if there are no errors.

52.6.23 ESMF_VMLog - Log VM information

INTERFACE:

```
subroutine ESMF_VMLog(vm, prefix, logMsgFlag, rc)
```

ARGUMENTS:

```
     type(ESMF_VM),          intent(in)              :: vm
 -- The following arguments require argument keyword syntax (e.g. rc=rc). --
     character(len=*),       intent(in),   optional  :: prefix
     type(ESMF_LogMsg_Flag), intent(in),   optional  :: logMsgFlag
     integer, intent(out),                 optional  :: rc
```

DESCRIPTION:

Write information about `vm` to the ESMF default Log.

The arguments are:

vm `ESMF_VM` object logged.

[prefix] String to prefix the log message. Default is no prefix.

[logMsgFlag] Type of log message generated. See section 50.2.3 for a list of valid message types. Default is `ESMF_LOGMSG_INFO`.

[rc] Return code; equals `ESMF_SUCCESS` if there are no errors.

52.6.24 ESMF_VMLogSystem - LogSystem

INTERFACE:

```
subroutine ESMF_VMLogSystem(prefix, logMsgFlag, rc)
```

ARGUMENTS:

```
     character(len=*),       intent(in),   optional  :: prefix
     type(ESMF_LogMsg_Flag), intent(in),   optional  :: logMsgFlag
     integer, intent(out),                 optional  :: rc
```

DESCRIPTION:

Log the VM.

The arguments are:

[prefix] String to prefix the log message. Default is no prefix.

[logMsgFlag] Type of log message generated. See section 50.2.3 for a list of valid message types. Default is `ESMF_LOGMSG_INFO`.

[rc] Return code; equals `ESMF_SUCCESS` if there are no errors.

52.6.25 ESMF_VMPrint - Print VM information

INTERFACE:

```
subroutine ESMF_VMPrint(vm, rc)
```

ARGUMENTS:

```
     type(ESMF_VM),  intent(in)            :: vm
 -- The following arguments require argument keyword syntax (e.g. rc=rc). --
     integer,        intent(out), optional :: rc
```

STATUS:

- This interface is backward compatible with ESMF versions starting at 5.2.0r. If code using this interface compiles with any version of ESMF starting with 5.2.0r, then it will compile with the current version.

DESCRIPTION:

Print internal information about the specified `ESMF_VM` to `stdout`.

The arguments are:

vm Specified `ESMF_VM` object.

[rc] Return code; equals `ESMF_SUCCESS` if there are no errors.

52.6.26 ESMF_VMRecv - Receive data from srcPet

INTERFACE:

```
subroutine ESMF_VMRecv(vm, recvData, count, srcPet, &
  syncflag, commhandle, rc)
```

ARGUMENTS:

```
    type(ESMF_VM),                      intent(in)            :: vm
    <type>(ESMF_KIND_<kind>), target,   intent(out)           :: recvData(:)
    integer,                            intent(in)            :: count
    integer,                            intent(in)            :: srcPet
-- The following arguments require argument keyword syntax (e.g. rc=rc). --
    type(ESMF_Sync_Flag),               intent(in),  optional :: syncflag
    type(ESMF_CommHandle),              intent(out), optional :: commhandle
    integer,                            intent(out), optional :: rc
```

STATUS:

- This interface is backward compatible with ESMF versions starting at 5.2.0r. If code using this interface compiles with any version of ESMF starting with 5.2.0r, then it will compile with the current version.

DESCRIPTION:

Receive contiguous data from `srcPet` within the same `ESMF_VM` object.

This method is overloaded for: `ESMF_TYPEKIND_I4`, `ESMF_TYPEKIND_I8`, `ESMF_TYPEKIND_R4`, `ESMF_TYPEKIND_R8`, `ESMF_TYPEKIND_LOGICAL`, `ESMF_TYPEKIND_CHARACTER`.

The arguments are:

vm `ESMF_VM` object.

recvData Contiguous data array for data to be received.

count Number of elements to be received.

srcPet Sending PET.

[syncflag] Flag indicating whether this call behaves blocking or non-blocking. The default is `ESMF_SYNC_BLOCKING`. See section 55.59 for a complete list of options.

[commhandle] If present, a communication handle will be returned in case of a non-blocking request (see argument `syncflag`). The `commhandle` can be used in `ESMF_VMCommWait()` to block the calling PET until the communication call has finished PET-locally. If no `commhandle` was supplied to a non-blocking call the VM method `ESMF_VMCommWaitAll()` may be used to block on all currently queued communication calls of the VM context.

[rc] Return code; equals `ESMF_SUCCESS` if there are no errors.

52.6.27 ESMF_VMReduce - Reduce data from across VM

INTERFACE:

```
subroutine ESMF_VMReduce(vm, sendData, recvData, count, &
  reduceflag, rootPet, syncflag, commhandle, rc)
```

ARGUMENTS:

```
     type(ESMF_VM),                      intent(in)            :: vm
     <type>(ESMF_KIND_<kind>), target, intent(in)            :: sendData(:)
     <type>(ESMF_KIND_<kind>), target, intent(out)           :: recvData(:)
     integer,                            intent(in)            :: count
     type(ESMF_Reduce_Flag),             intent(in)            :: reduceflag
     integer,                            intent(in)            :: rootPet
 -- The following arguments require argument keyword syntax (e.g. rc=rc). --
     type(ESMF_Sync_Flag),               intent(in),  optional :: syncflag
     type(ESMF_CommHandle),              intent(out), optional :: commhandle
     integer,                            intent(out), optional :: rc
```

STATUS:

- This interface is backward compatible with ESMF versions starting at 5.2.0r. If code using this interface compiles with any version of ESMF starting with 5.2.0r, then it will compile with the current version.

DESCRIPTION:

Collective `ESMF_VM` communication call that reduces a contiguous data array across the `ESMF_VM` object into a contiguous data array of the same <type><kind>. The result array is returned on `rootPet`. Different reduction operations can be specified.

This method is overloaded for: `ESMF_TYPEKIND_I4`, `ESMF_TYPEKIND_I8`, `ESMF_TYPEKIND_R4`, `ESMF_TYPEKIND_R8`.

TODO: The current version of this method does not provide an implementation of the *non-blocking* feature. When calling this method with `syncflag = ESMF_SYNC_NONBLOCKING`, error code `ESMF_RC_NOT_IMPL` will be returned and an error will be logged.

The arguments are:

vm `ESMF_VM` object.

sendData Contiguous data array holding data to be sent. All PETs must specify a valid source array.

recvData Contiguous data array for data to be received. Only the `recvData` array specified by the `rootPet` will be used by this method.

count Number of elements in sendData and recvData. Must be the same on all PETs.

reduceflag Reduction operation. See section 55.49 for a list of valid reduce operations.

rootPet PET on which reduced data is returned.

[syncflag] Flag indicating whether this call behaves blocking or non-blocking. The default is `ESMF_SYNC_BLOCKING`. See section 55.59 for a complete list of options.

[commhandle] If present, a communication handle will be returned in case of a non-blocking request (see argument `syncflag`). The `commhandle` can be used in `ESMF_VMCommWait()` to block the calling PET until the communication call has finished PET-locally. If no `commhandle` was supplied to a non-blocking call the VM method `ESMF_VMCommWaitAll()` may be used to block on all currently queued communication calls of the VM context.

[rc] Return code; equals `ESMF_SUCCESS` if there are no errors.

52.6.28 ESMF_VMScatter - Scatter data across VM

INTERFACE:

```
subroutine ESMF_VMScatter(vm, sendData, recvData, count, &
  rootPet, syncflag, commhandle, rc)
```

ARGUMENTS:

```
  type(ESMF_VM),                      intent(in)            :: vm
  <type>(ESMF_KIND_<kind>), target, intent(in)            :: sendData(:)
  <type>(ESMF_KIND_<kind>), target, intent(out)           :: recvData(:)
  integer,                            intent(in)            :: count
  integer,                            intent(in)            :: rootPet
-- The following arguments require argument keyword syntax (e.g. rc=rc). --
  type(ESMF_Sync_Flag),               intent(in),  optional :: syncflag
  type(ESMF_CommHandle),              intent(out), optional :: commhandle
  integer,                            intent(out), optional :: rc
```

STATUS:

- This interface is backward compatible with ESMF versions starting at 5.2.0r. If code using this interface compiles with any version of ESMF starting with 5.2.0r, then it will compile with the current version.

DESCRIPTION:

Collective `ESMF_VM` communication call that scatters contiguous data of <type><kind> from `rootPet` across all the PETs of an `ESMF_VM` object. Every PET, including `rootPet`, receives a portion of the data. The `count` number of elements received by PET `i` originate from the `sendData` array on `rootPet`, starting at position $i \times count + 1$. Each PET stores the received contiguous data portion at the start of its `recvData` array.

This method is overloaded for: `ESMF_TYPEKIND_I4`, `ESMF_TYPEKIND_I8`, `ESMF_TYPEKIND_R4`, `ESMF_TYPEKIND_R8`, `ESMF_TYPEKIND_LOGICAL`.

The arguments are:

vm `ESMF_VM` object.

sendData Contiguous data array holding data to be sent. Only the `sendData` array specified by the `rootPet` will be used by this method.

recvData Contiguous data array for data to be received. All PETs must specify a valid destination array large enough to accommodate the received data.

count Number of elements to be sent from `rootPet` to each of the PETs. Must be the same on all PETs.

rootPet PET that holds data that is being scattered.

[syncflag] Flag indicating whether this call behaves blocking or non-blocking. The default is `ESMF_SYNC_BLOCKING`. See section 55.59 for a complete list of options.

[commhandle] If present, a communication handle will be returned in case of a non-blocking request (see argument `syncflag`). The `commhandle` can be used in `ESMF_VMCommWait()` to block the calling PET until the communication call has finished PET-locally. If no `commhandle` was supplied to a non-blocking call the VM method `ESMF_VMCommWaitAll()` may be used to block on all currently queued communication calls of the VM context.

[rc] Return code; equals `ESMF_SUCCESS` if there are no errors.

52.6.29 ESMF_VMScatterV - ScatterV across VM

INTERFACE:

```
subroutine ESMF_VMScatterV(vm, sendData, sendCounts, &
  sendOffsets, recvData, recvCount, rootPet, rc)
```

ARGUMENTS:

```
  type(ESMF_VM),                      intent(in)            :: vm
  <type>(ESMF_KIND_<kind>), target, intent(in)            :: sendData(:)
  integer,                            intent(in)            :: sendCounts(:)
  integer,                            intent(in)            :: sendOffsets(:)
  <type>(ESMF_KIND_<kind>), target, intent(out)           :: recvData(:)
  integer,                            intent(in)            :: recvCount
  integer,                            intent(in)            :: rootPet
-- The following arguments require argument keyword syntax (e.g. rc=rc). --
  integer,                            intent(out), optional :: rc
```

STATUS:

- This interface is backward compatible with ESMF versions starting at 5.2.0r. If code using this interface compiles with any version of ESMF starting with 5.2.0r, then it will compile with the current version.

DESCRIPTION:

Collective `ESMF_VM` communication call that scatters contiguous data of <type><kind> from `rootPet` across all the PETs of an `ESMF_VM` object. Every PET, including `rootPet`, receives a portion of the data. The `recvCount` number of elements received by PET `i` originate from the `sendData` array on `rootPet`, starting at position `sendOffsets(i)`. Each PET stores the received contiguous data portion at the start of its `recvData` array.

This method is overloaded for: `ESMF_TYPEKIND_I4`, `ESMF_TYPEKIND_I8`, `ESMF_TYPEKIND_R4`, `ESMF_TYPEKIND_R8`.

The arguments are:

vm `ESMF_VM` object.

sendData Contiguous data array holding data to be sent. Only the `sendData` array specified by the `rootPet` will be used by this method.

sendCounts Number of `sendData` elements to be sent to corresponding receive PET.

sendOffsets Offsets in units of elements in `sendData` marking the start of element sequence to be sent to receive PET.

recvData Contiguous data array for data to be received. All PETs must specify a valid `recvData` argument large enough to accommodate the received data.

recvCount Number of `recvData` elements to receive by local PET from `rootPet`.

rootPet PET that holds data that is being scattered.

[rc] Return code; equals `ESMF_SUCCESS` if there are no errors.

52.6.30 ESMF_VMSend - Send data to dstPet

INTERFACE:

```
    subroutine ESMF_VMSend(vm, sendData, count, dstPet, &
      syncflag, commhandle, rc)
```

ARGUMENTS:

```
      type(ESMF_VM),                     intent(in)            :: vm
      <type>(ESMF_KIND_<kind>), target, intent(in)            :: sendData(:)
      integer,                           intent(in)            :: count
      integer,                           intent(in)            :: dstPet
 -- The following arguments require argument keyword syntax (e.g. rc=rc). --
      type(ESMF_Sync_Flag),              intent(in),  optional :: syncflag
      type(ESMF_CommHandle),             intent(out), optional :: commhandle
      integer,                           intent(out), optional :: rc
```

STATUS:

- This interface is backward compatible with ESMF versions starting at 5.2.0r. If code using this interface compiles with any version of ESMF starting with 5.2.0r, then it will compile with the current version.

DESCRIPTION:

Send contiguous data to `dstPet` within the same `ESMF_VM` object.

This method is overloaded for: `ESMF_TYPEKIND_I4`, `ESMF_TYPEKIND_I8`, `ESMF_TYPEKIND_R4`, `ESMF_TYPEKIND_R8`, `ESMF_TYPEKIND_LOGICAL`, `ESMF_TYPEKIND_CHARACTER`.

The arguments are:

vm `ESMF_VM` object.

sendData Contiguous data array holding data to be sent.

count Number of elements to be sent.

dstPet Receiving PET.

[syncflag] Flag indicating whether this call behaves blocking or non-blocking. The default is `ESMF_SYNC_BLOCKING`. See section 55.59 for a complete list of options.

[commhandle] If present, a communication handle will be returned in case of a non-blocking request (see argument `syncflag`). The `commhandle` can be used in `ESMF_VMCommWait()` to block the calling PET until the communication call has finished PET-locally. If no `commhandle` was supplied to a non-blocking call the VM method `ESMF_VMCommWaitAll()` may be used to block on all currently queued communication calls of the VM context.

[rc] Return code; equals `ESMF_SUCCESS` if there are no errors.

52.6.31 ESMF_VMSendRecv - Send and Recv data to and from PETs

INTERFACE:

```
    subroutine ESMF_VMSendRecv(vm, sendData, sendCount, dstPet, &
      recvData, recvCount, srcPet, syncflag, commhandle, rc)
```

ARGUMENTS:

```
      type(ESMF_VM),                     intent(in)            :: vm
      <type>(ESMF_KIND_<kind>), target, intent(in)            :: sendData(:)
      integer,                           intent(in)            :: sendCount
      integer,                           intent(in)            :: dstPet
      <type>(ESMF_KIND_<kind>), target, intent(out)           :: recvData(:)
      integer,                           intent(in)            :: recvCount
      integer,                           intent(in)            :: srcPet
 -- The following arguments require argument keyword syntax (e.g. rc=rc). --
      type(ESMF_Sync_Flag),              intent(in),  optional :: syncflag
      type(ESMF_CommHandle),             intent(out), optional :: commhandle
      integer,                           intent(out), optional :: rc
```

STATUS:

- This interface is backward compatible with ESMF versions starting at 5.2.0r. If code using this interface compiles with any version of ESMF starting with 5.2.0r, then it will compile with the current version.

DESCRIPTION:

Send contiguous data to `dstPet` within the same `ESMF_VM` object while receiving contiguous data from `srcPet` within the same `ESMF_VM` object. The `sendData` and `recvData` arrays must be disjoint!

This method is overloaded for: `ESMF_TYPEKIND_I4`, `ESMF_TYPEKIND_I8`, `ESMF_TYPEKIND_R4`, `ESMF_TYPEKIND_R8`, `ESMF_TYPEKIND_LOGICAL`, `ESMF_TYPEKIND_CHARACTER`.

The arguments are:

vm `ESMF_VM` object.

sendData Contiguous data array holding data to be sent.

sendCount Number of elements to be sent.

dstPet PET that holds `recvData`.

recvData Contiguous data array for data to be received.

recvCount Number of elements to be received.

srcPet PET that holds `sendData`.

[syncflag] Flag indicating whether this call behaves blocking or non-blocking. The default is `ESMF_SYNC_BLOCKING`. See section 55.59 for a complete list of options.

[commhandle] If present, a communication handle will be returned in case of a non-blocking request (see argument `syncflag`). The `commhandle` can be used in `ESMF_VMCommWait()` to block the calling PET until the communication call has finished PET-locally. If no `commhandle` was supplied to a non-blocking call the VM method `ESMF_VMCommWaitAll()` may be used to block on all currently queued communication calls of the VM context.

[rc] Return code; equals `ESMF_SUCCESS` if there are no errors.

52.6.32 ESMF_VMValidate - Validate VM internals

INTERFACE:

```
subroutine ESMF_VMValidate(vm, rc)
```

ARGUMENTS:

```
     type(ESMF_VM), intent(in)            :: vm
 -- The following arguments require argument keyword syntax (e.g. rc=rc). --
     integer,       intent(out), optional :: rc
```

STATUS:

- This interface is backward compatible with ESMF versions starting at 5.2.0r. If code using this interface compiles with any version of ESMF starting with 5.2.0r, then it will compile with the current version.

DESCRIPTION:

Validates that the `vm` is internally consistent. The method returns an error code if problems are found.

The arguments are:

vm Specified `ESMF_VM` object.

[rc] Return code; equals `ESMF_SUCCESS` if there are no errors.

52.6.33 ESMF_VMWtime - Get floating-point number of seconds

INTERFACE:

```
subroutine ESMF_VMWtime(time, rc)
```

ARGUMENTS:

```
     real(ESMF_KIND_R8), intent(out)           :: time
 -- The following arguments require argument keyword syntax (e.g. rc=rc). --
     integer,            intent(out), optional :: rc
```

STATUS:

- This interface is backward compatible with ESMF versions starting at 5.2.0r. If code using this interface compiles with any version of ESMF starting with 5.2.0r, then it will compile with the current version.

DESCRIPTION:

Get floating-point number of seconds of elapsed wall-clock time since the beginning of execution of the application.

The arguments are:

time Time in seconds.

[rc] Return code; equals `ESMF_SUCCESS` if there are no errors.

52.6.34 ESMF_VMWtimeDelay - Delay execution

INTERFACE:

```
recursive subroutine ESMF_VMWtimeDelay(delay, rc)
```

ARGUMENTS:

```
     real(ESMF_KIND_R8), intent(in)            :: delay
 -- The following arguments require argument keyword syntax (e.g. rc=rc). --
     integer,            intent(out), optional :: rc
```

STATUS:

- This interface is backward compatible with ESMF versions starting at 5.2.0r. If code using this interface compiles with any version of ESMF starting with 5.2.0r, then it will compile with the current version.

DESCRIPTION:

Delay execution for amount of seconds.

The arguments are:

delay Delay time in seconds.

[rc] Return code; equals `ESMF_SUCCESS` if there are no errors.

52.6.35 ESMF_VMWtimePrec - Timer precision as floating-point number of seconds

INTERFACE:

```
subroutine ESMF_VMWtimePrec(prec, rc)
```

ARGUMENTS:

```
     real(ESMF_KIND_R8), intent(out)           :: prec
 -- The following arguments require argument keyword syntax (e.g. rc=rc). --
     integer,            intent(out), optional :: rc
```

STATUS:

- This interface is backward compatible with ESMF versions starting at 5.2.0r. If code using this interface compiles with any version of ESMF starting with 5.2.0r, then it will compile with the current version.

DESCRIPTION:

Get a run-time estimate of the timer precision as floating-point number of seconds. This is a relatively expensive call since the timer precision is measured several times before the maximum is returned as the estimate. The returned value is PET-specific and may differ across the VM context.

The arguments are:

prec Timer precision in seconds.

[rc] Return code; equals `ESMF_SUCCESS` if there are no errors.

53 Profiling and Tracing

53.1 Description

53.1.1 Profiling

ESMF's built in *profiling* capability collects runtime statistics of an executing ESMF application through both automatic and manual code instrumentation. Timing information for all phases of all ESMF components executing in an application can be automatically collected using the `ESMF_RUNTIME_PROFILE` environment variable (see below for settings). Additionally, arbitrary user-defined code regions can be timed by manually instrumenting code with special API calls. Timing profiles of component phases and user-defined regions can be output in several different formats:

- in text at the end of ESMF Log files
- in separate text file, one per PET (if the ESMF Logs are turned off)
- in a single summary text file that aggregates timings over multiple PETs
- in a binary format for import into the esmf-profiler for profile visualization

The following table lists important environment variables that control aspects of ESMF profiling.

Environment Variable	Description	Example Values
`ESMF_RUNTIME_PROFILE`	Enable/disables all profiling functions	`ON` or `OFF`
`ESMF_RUNTIME_PROFILE_PETLIST`	Limits profiling to an explicit list of PETs	"`0-9 50 99`"
`ESMF_RUNTIME_PROFILE_OUTPUT`	Controls output format of profiles; multiple can be specified in a space separated list	`TEXT`, `SUMMARY`, `BINARY`

53.1.2 Tracing

Whereas profiling collects summary information from an application, *tracing* records a more detailed set of events for later analysis. Trace analysis can be used to understand what happened during a program's execution and is often used for diagnosing problems, debugging, and performance analysis.

ESMF has a built-in tracing capability that records events into special binary log files. Unlike log files written by the `ESMF_Log` class, which are primarily for human consumption (see Section 50.1), the trace output files are recorded in a compact binary representation and are processed by tools to produce various analyses. ESMF event streams are recorded in the Common Trace Format (CTF). CTF traces include one or more event streams, as well as a metadata file describing the events in the streams.

Several tools are available for reading in the CTF traces output by ESMF. Of the tools listed below, the first one is designed specifically for analyzing ESMF applications and the second two are general purpose tools for working with all CTF traces.

- esmf-profiler is a tool that ingests traces from an ESMF application and generates performance profile plots.
- TraceCompass is a general purpose tool for reading, analyzing, and visualizing traces.
- Babeltrace is a command-line tool and library for trace conversion that can read and write CTF traces. Python bindings are available to open CTF traces are iterate through events.

Events that can be captured by the ESMF tracer include the following. Events are recorded with a high-precision timestamp to allow timing analyses.

phase_enter indicates entry into an initialize, run, or finalize ESMF component routine

phase_exit indicates exit from an initialize, run, or finalize ESMF component routine

region_enter indicates entry into a user-defined code region

region_exit indicates exit from a user-defined code region

The following table lists important environment variables that control aspects of ESMF tracing.

Environment Variable	Description	Example Values
ESMF_RUNTIME_TRACE	Enable/disables all tracing functions	ON or OFF
ESMF_RUNTIME_TRACE_CLOCK	Sets the type of clock for timestamping events (see Section 53.2.6).	REALTIME or MONO MONOTONIC_SYNC
ESMF_RUNTIME_TRACE_PETLIST	Limits tracing to an explicit list of PETs	"0-9 50 99"
ESMF_RUNTIME_TRACE_COMPONENT	Enables/disable tracing of Component phase_enter and phase_exit events	ON or OFF
ESMF_RUNTIME_TRACE_FLUSH	Controls frequency of event stream flushing to file	DEFAULT or EAGER

53.2 Use and Examples

53.2.1 Output a Timing Profile to Text

ESMF profiling is disabled by default. To profile an application, set the ESMF_RUNTIME_PROFILE variable to ON prior to executing the application. You do not need to recompile your code to enable profiling.

```
# csh shell
$ setenv ESMF_RUNTIME_PROFILE ON

# bash shell
$ export ESMF_RUNTIME_PROFILE=ON

# (from now on, only the csh shell version will be shown)
```

Then execute the application in the usual way. At the end of the run the profile information will be available at the end of each PET log (if ESMF Logs are turned on) or in a set of separate files, one per PET, with names *ESMF_Profile.XXX* where XXX is the PET number. Below is an example timing profile. Some regions are left out for brevity.

```
Region                          Count  Total (s)   Self (s)    Mean (s)    Min (s)     Ma
  [esm] Init 1                  1      4.0878      0.0341      4.0878      4.0878      4.
    [OCN-TO-ATM] IPDv05p6b      1      2.6007      2.6007      2.6007      2.6007      2.
    [ATM-TO-OCN] IPDv05p6b      1      1.4333      1.4333      1.4333      1.4333      1.
    [ATM] IPDv00p2              1      0.0055      0.0055      0.0055      0.0055      0.
    [OCN] IPDv00p2              1      0.0023      0.0023      0.0023      0.0023      0.
    [ATM] IPDv00p1              1      0.0011      0.0011      0.0011      0.0011      0.
    [OCN] IPDv00p1              1      0.0009      0.0009      0.0009      0.0009      0.
    [ATM-TO-OCN] IPDv05p3       1      0.0008      0.0008      0.0008      0.0008      0.
    [ATM-TO-OCN] IPDv05p1       1      0.0008      0.0008      0.0008      0.0008      0.
    [ATM-TO-OCN] IPDv05p2b      1      0.0007      0.0007      0.0007      0.0007      0.
    [ATM-TO-OCN] IPDv05p4       1      0.0007      0.0007      0.0007      0.0007      0.
    [ATM-TO-OCN] IPDv05p2a      1      0.0007      0.0007      0.0007      0.0007      0.
    [ATM-TO-OCN] IPDv05p5       1      0.0007      0.0007      0.0007      0.0007      0.
    [OCN-TO-ATM] IPDv05p3       1      0.0006      0.0006      0.0006      0.0006      0.
    [OCN-TO-ATM] IPDv05p4       1      0.0006      0.0006      0.0006      0.0006      0.
    [OCN-TO-ATM] IPDv05p2b      1      0.0006      0.0006      0.0006      0.0006      0.
    [OCN-TO-ATM] IPDv05p2a      1      0.0006      0.0006      0.0006      0.0006      0.
    [OCN-TO-ATM] IPDv05p5       1      0.0006      0.0006      0.0006      0.0006      0.
    [OCN-TO-ATM] IPDv05p1       1      0.0005      0.0005      0.0005      0.0005      0.
```

```
  [esm] RunPhase1                 1      2.7423      0.9432      2.7423      2.7423      2.7
    [OCN-TO-ATM] RunPhase1        864    0.6094      0.6094      0.0007      0.0006      0.0
    [ATM] RunPhase1               864    0.5296      0.2274      0.0006      0.0005      0.0
      ATM:ModelAdvance            864    0.3022      0.3022      0.0003      0.0003      0.0
    [ATM-TO-OCN] RunPhase1        864    0.3345      0.3345      0.0004      0.0002      0.0
    [OCN] RunPhase1               864    0.3256      0.3256      0.0004      0.0003      0.0
  [esm] FinalizePhase1            1      0.0029      0.0020      0.0029      0.0029      0.0
    [OCN-TO-ATM] FinalizePhase1   1      0.0006      0.0006      0.0006      0.0006      0.0
    [ATM-TO-OCN] FinalizePhase1   1      0.0002      0.0002      0.0002      0.0002      0.0
    [OCN] FinalizePhase1          1      0.0001      0.0001      0.0001      0.0001      0.0
    [ATM] FinalizePhase1          1      0.0000      0.0000      0.0000      0.0000      0.0
```

A timed region is either an ESMF component phase (e.g., initialize, run, or finalize) or a user-defined region of code surrounded by calls to `ESMF_TraceRegionEnter()` and `ESMF_TraceRegionExit()`. (See section 53.2.8 for more information on instrumenting user-defined regions.) Regions are organized hierarchically with sub-regions nested. For example, in the profile above, the `[OCN] RunPhase1` is a sub-region of `[esm] RunPhase1` and is entirely contained inside that region. Regions with the same name may appear at multiple places in the hierarchy, and so would appear in multiple rows in the table. The statistics in that row apply to that region at that location in the hierarchy. Component names appear in square brackets, e.g., `[ATM]`, `[OCN]`, and `[ATM-TO-OCN]`. By default, timings are based on elapsed wall clock time and are collected on a per-PET basis. Therefore, regions timings may differ across PETs. Regions are sorted with the most expensive regions appearing at the top. The following describes the meaning of the statistics in each column:

`Count` the number of times the region is executed

`Total` the aggregate time spent in the region, inclusive of all sub-regions

`Self` the aggregate time spend in the region, exclusive of all sub-regions

`Mean` the average amount of time for one execution of the region

`Min` time of the fastest execution of the region

`Max` time of the slowest execution of the region

53.2.2 Summarize Timings across Multiple PETs

By default, separate timing profiles are generated for each PET in the application. The per-PET profiles can be aggregated together and output to a single file, *ESMF_Profile.summary*, by setting the `ESMF_RUNTIME_PROFILE_OUTPUT` environment variable as follows:

```
$ setenv ESMF_RUNTIME_PROFILE ON              # turn on profiling
$ setenv ESMF_RUNTIME_PROFILE_OUTPUT SUMMARY  # specify summary output
```

Note the `ESMF_RUNTIME_PROFILE` environment variable must also be set to `ON` since this controls all profiling capabilities. The *ESMF_Profile.summary* file will contain a tree of timed regions, but aggregated across all PETs. For example:

```
Region                          PETs   PEs    Count    Mean (s)    Min (s)     Min PET Max
  [esm] Init 1                  4      4      1        4.0880      4.0878      2       4.0
```

```
    [OCN-TO-ATM] IPDv05p6b       4      4      1        2.6007      2.6007      2       2.6
    [ATM-TO-OCN] IPDv05p6b       4      4      1        1.4335      1.4333      0       1.4
    [ATM-TO-OCN] IPDv05p4        4      4      1        0.0037      0.0007      0       0.0
    [ATM] IPDv00p2               4      4      1        0.0034      0.0020      1       0.0
    [ATM-TO-OCN] IPDv05p1        4      4      1        0.0020      0.0007      2       0.0
    [OCN] IPDv00p2               4      4      1        0.0019      0.0015      3       0.0
    [ATM-TO-OCN] IPDv05p3        4      4      1        0.0010      0.0008      0       0.0
    [ATM-TO-OCN] IPDv05p2a       4      4      1        0.0009      0.0007      0       0.0
    [ATM] IPDv00p1               4      4      1        0.0009      0.0007      3       0.0
    [ATM-TO-OCN] IPDv05p2b       4      4      1        0.0008      0.0007      0       0.0
    [ATM-TO-OCN] IPDv05p5        4      4      1        0.0008      0.0007      0       0.0
    [ATM-TO-OCN] IPDv05p6a       4      4      1        0.0008      0.0005      2       0.0
    [OCN-TO-ATM] IPDv05p3        4      4      1        0.0008      0.0006      2       0.0
    [OCN-TO-ATM] IPDv05p4        4      4      1        0.0008      0.0006      0       0.0
    [OCN-TO-ATM] IPDv05p2b       4      4      1        0.0007      0.0006      2       0.0
    [OCN] IPDv00p1               4      4      1        0.0007      0.0005      1       0.0
    [OCN-TO-ATM] IPDv05p2a       4      4      1        0.0007      0.0006      2       0.0
    [OCN-TO-ATM] IPDv05p5        4      4      1        0.0007      0.0006      0       0.0
    [OCN-TO-ATM] IPDv05p1        4      4      1        0.0006      0.0005      0       0.0
    [OCN-TO-ATM] IPDv05p6a       4      4      1        0.0006      0.0004      2       0.0
  [esm] RunPhase1                4      4      1        2.7444      2.7423      0       2.7
    [OCN-TO-ATM] RunPhase1       4      4    864        0.6123      0.6004      2       0.6
    [ATM] RunPhase1              4      4    864        0.5386      0.5296      0       0.5
      ATM:ModelAdvance           4      4    864        0.3038      0.3022      0       0.3
    [OCN] RunPhase1              4      4    864        0.3471      0.3256      0       0.3
    [ATM-TO-OCN] RunPhase1       4      4    864        0.2843      0.1956      1       0.3
  [esm] FinalizePhase1           4      4      1        0.0029      0.0029      1       0.0
    [OCN-TO-ATM] FinalizePhase1  4      4      1        0.0007      0.0006      0       0.0
    [ATM-TO-OCN] FinalizePhase1  4      4      1        0.0002      0.0001      3       0.0
    [OCN] FinalizePhase1         4      4      1        0.0001      0.0001      3       0.0
    [ATM] FinalizePhase1         4      4      1        0.0001      0.0000      0       0.0
```

The meaning of the statistics in each column in as follows:

- `PETs` the number of reporting PETs that executed the region
- `PEs` the number of PEs associated with the reporting PETs that executed the region
- `Count` the number of times each reporting PET executed the region or "MULTIPLE" if not all PETs executed the region the same number of times
- `Mean` the mean across all reporting PETs of the total time spent in the region
- `Min` the minimum across all reporting PETs of the total time spent in the region
- `Min PET` the PET that reported the minimum time
- `Max` the maximum across all reporting PETs of the total time spent in the region
- `Max PET` the PET that reported the maximum time

Note that setting the `ESMF_RUNTIME_PROFILE_PETLIST` environment variable (described below) may reduce the number of reporting PETs. Only reporting PETs are included in the summary profile. To output both the per-PET and summary timing profiles, set the `ESMF_RUNTIME_PROFILE_OUTPUT` environment variable as follows:

```
$ setenv ESMF_RUNTIME_PROFILE_OUTPUT "TEXT SUMMARY"
```

53.2.3 Limit the Set of Profiled PETs

By default, all PETs in an application are profiled. It may be desirable to only profile a subset of PETs to reduce the amount of output. An explicit list of PETs can be specified by setting the `ESMF_RUNTIME_PROFILE_PETLIST` environment variable. The syntax of this environment variable is to list PET numbers separated by spaces. PET ranges are also supported using the "X-Y" syntax where X < Y. For example:

```
# only profile PETs 0, 20, and 35 through 39
$ setenv ESMF_RUNTIME_PROFILE_PETLIST "0 20 35-39"
```

When used in conjunction with the `SUMMARY` option above, the summarized profile will only aggregate over the specified set of PETs. The one exception is that PET 0 is always profiled if `ESMF_RUNTIME_PROFILE=ON`, regardless of the `ESMF_RUNTIME_TRACE_PETLIST` setting.

53.2.4 Include MPI Communication in the Profile

MPI functions can be included in the timing profile to indicate how much time is spent inside communication calls. This can also help to determine load imbalance in the system, since large times spent inside MPI may indicate that communication between PETs is not tightly synchronized. This option includes *all* MPI calls in the application, whether or not they originate from the ESMF library. Here is a partial example summary profile that contains MPI times:

```
Region                          PETs   Count    Mean (s)    Min (s)     Min PET Max (s)
  [esm] RunPhase1               8      1        4.9307      4.6867      0       4.9656
    [OCN] RunPhase1             8      1824     0.8344      0.8164      0       0.8652
    [MED] RunPhase1             8      1824     0.8203      0.7900      5       0.8584
    [ATM] RunPhase1             8      1824     0.6387      0.6212      5       0.6610
    [ATM-TO-MED] RunPhase1      8      1824     0.5975      0.5317      0       0.6583
      MPI_Bcast                 8      1824     0.0443      0.0025      4       0.1231
      MPI_Wait                  8      MULTIPLE 0.0421      0.0032      0       0.0998
    [MED-TO-OCN] RunPhase1      8      1824     0.4879      0.4497      0       0.5362
      MPI_Wait                  8      MULTIPLE 0.0234      0.0030      0       0.0821
      MPI_Bcast                 8      1824     0.0111      0.0024      4       0.0273
    [OCN-TO-MED] RunPhase1      8      1824     0.4541      0.4075      0       0.4918
      MPI_Wait                  8      MULTIPLE 0.0339      0.0017      0       0.0824
      MPI_Bcast                 8      1824     0.0194      0.0026      4       0.0452
    [MED-TO-ATM] RunPhase1      8      1824     0.4487      0.4005      0       0.4911
      MPI_Bcast                 8      1824     0.0338      0.0026      4       0.0942
      MPI_Wait                  8      MULTIPLE 0.0241      0.0022      1       0.0817
  [esm] Init 1                  8      1        0.6287      0.6287      1       0.6287
    [ATM-TO-MED] IPDv05p6b      8      1        0.1501      0.1500      1       0.1501
      MPI_Barrier               8      242      0.0082      0.0006      3       0.0157
      MPI_Wait                  8      MULTIPLE 0.0034      0.0010      0       0.0053
      MPI_Allreduce             8      62       0.0030      0.0003      3       0.0063
      MPI_Alltoall              8      6        0.0015      0.0000      1       0.0022
      MPI_Allgather             8      21       0.0010      0.0002      1       0.0017
```

```
MPI_Waitall                 8      MULTIPLE 0.0006      0.0001      3       0.0015
MPI_Send                    8      MULTIPLE 0.0004      0.0001      7       0.0008
MPI_Allgatherv              8      6        0.0001      0.0001      4       0.0001
MPI_Scatter                 8      5        0.0000      0.0000      0       0.0000
MPI_Reduce                  8      5        0.0000      0.0000      1       0.0000
MPI_Recv                    8      MULTIPLE 0.0000      0.0000      0       0.0000
MPI_Bcast                   8      1        0.0000      0.0000      0       0.0000
```

The procedure for including MPI functions in the timing profile depends on whether the application is dynamically or statically linked. Most applications are dynamically linked, however on some systems (such as Cray), static linking may be used. Note that for either option, ESMF must be built with `ESMF_TRACE_LIB_BUILD=ON`, which is the default.

In *dynamically linked applications*, the `LD_PRELOAD` (Linux) or `DYLD_INSERT_LIBRARIES` (Darwin) environment variable must be used when executing the MPI application. This instructs the dynamic loader to interpose certain MPI symbols so they can be captured by the ESMF profiler. To simplify this process, a script is provided at `$(ESMF_INSTALL_LIBDIR)/preload.sh` that sets the appropriate variable.

For example, if you typically execute your application as as follows:

```
$ mpirun -np 8 ./myApp
```

then you should add the *preload.sh* script in front of the executable when starting the application as follows:

```
# replace $(ESMF_INSTALL_LIBDIR) with absolute path
# ... to the ESMF installation lib directory
$ mpirun -np 8 $(ESMF_INSTALL_LIBDIR)/preload.sh ./myApp
```

An advantage of this approach is that your application does *not* need to be recompiled. The MPI timing information will be included in the per-PET profiles and/or the summary profile, depending on the setting of environment variable `ESMF_RUNTIME_PROFILE_OUTPUT`.

Notice that an additional step is required for dynamically linked applications on *Darwin* systems with System Integrity Protection (SIP) enabled! In addition to using the `$(ESMF_INSTALL_LIBDIR)/preload.sh` script during launching of the executable as shown above, the executable must *also be linked* against the dynamic ESMF trace preload library. This must happen during the link step of the executable. It is most easily accomplished by using variable `$(ESMF_F90ESMFPRELOADLINKLIBS)` instead of the typical `$(ESMF_F90ESMFLINKLIBS)` variable for the final link command. Both variables are defined in the *esmf.mk* file that should be imported by the application Makefile. For example:

```
# import esmf.mk
include $(ESMFMKFILE)

# other makefile targets here...

# example final link command, with $(ESMF_F90ESMFPRELOADLINKLIBS)
myApp: myApp.o driver.o model.o
        $(ESMF_F90LINKER) $(ESMF_F90LINKOPTS) $(ESMF_F90LINKPATHS) \
        $(ESMF_F90LINKRPATHS) -o $@ $^ $(ESMF_F90ESMFPRELOADLINKLIBS)
```

In *statically linked applications*, the application must be re-linked with specific options provided to the linker. These options instruct the linker to wrap the MPI symbols with the ESMF profiling functions. The linking flags that must be provided are included in the *esmf.mk* Makefile fragment that is part of the ESMF installation. These link flags should be imported into your application Makefile, and included in the final link command. To do this, first import the *esmf.mk* file into your application Makefile. The path to this file is typically stored in the `ESMFMKFILE` environment variable. Then, pass the variables `$(ESMF_TRACE_STATICLINKOPTS)` and `$(ESMF_TRACE_STATICLINKLIBS)` to the final linking command. For example:

```
# import esmf.mk
include $(ESMFMKFILE)

# other makefile targets here...

# example final link command, with $(ESMF_TRACE_STATICLINKOPTS)
# ... and $(ESMF_TRACE_STATICLINKLIBS) added
myApp: myApp.o driver.o model.o
        $(ESMF_F90LINKER) $(ESMF_F90LINKOPTS) $(ESMF_F90LINKPATHS) \
        $(ESMF_F90LINKRPATHS) -o $@ $^ $(ESMF_F90ESMFLINKLIBS) \
        $(ESMF_TRACE_STATICLINKOPTS) $(ESMF_TRACE_STATICLINKLIBS)
```

This option will statically wrap all of the MPI functions and include them in the profile output. Execute the application in the normal way with the environment variable `ESMF_RUNTIME_PROFILE` set to `ON`. You will see the MPI functions included in the timing profile.

53.2.5 Output a Detailed Trace for Analysis

ESMF tracing is disabled by default. To enable tracing, set the `ESMF_RUNTIME_TRACE` environment variable to `ON`. You do not need to recompile your code to enable tracing.

```
# csh shell
$ setenv ESMF_RUNTIME_TRACE ON

# bash shell
$ export ESMF_RUNTIME_TRACE=ON
```

When enabled, the default behavior is to trace all PETs of the ESMF application. Although the ESMF tracer is designed to write events in a compact form, tracing can produce an extremely large number of events depending on the total number of PETs and the length of the run. To reduce output, it is possible to restrict the PETs that produce trace output by setting the `ESMF_RUNTIME_TRACE_PETLIST` environment variable. For example, this setting:

```
$ setenv ESMF_RUNTIME_TRACE_PETLIST "0 101 192-196"
```

will instruct the tracer to only trace PETs 0, 101, and 192 through 196 (inclusive). The syntax of this environment variable is to list PET numbers separated by spaces. PET ranges are also supported using the "X-Y" syntax where X < Y. For PET counts greater than 100, it is recommended to set this environment variable. The one exception is that PET 0 is always traced, regardless of the `ESMF_RUNTIME_TRACE_PETLIST` setting.

ESMF's profiling and tracing options can be used together. A typical use would be to set `ESMF_RUNTIME_PROFILE=ON` for all PETs to capture summary timings, and set `ESMF_RUNTIME_TRACE=ON`

and ESMF_RUNTIME_TRACE_PETLIST to a subset of of PETs, such as the root PET of each ESMF component. This helps to keep trace sizes small while still providing timing summaries over all PETs.

When tracing is enabled, phase_enter and phase_exit events will automatically be recorded for all initialize, run, and finalize phases of all Components in the application. To trace *only* user-instrumented regions (via the ESMF_TraceRegionEnter() and ESMF_TraceRegionExit() calls), Component-level tracing can be turned off by setting:

```
$ setenv ESMF_RUNTIME_TRACE_COMPONENT OFF
```

After running an ESMF application with tracing enabled, a directory called *traceout* will be created in the run directory and it will contain a *metadata* file and an event stream file *esmf_stream_XXXX* for each PET with tracing enabled. Together these files form a valid CTF trace which may be analyzed with any of the tools listed above.

Trace events are flushed to file at a regular interval. If the application crashes, some of the most recent events may not be flushed to file. To maximize the number of events appearing in the trace, an option is available to flush events to file more frequently. Because this option may have negative performance implications due to increased file I/O, it is not recommended unless needed. To turn on eager flushing use:

```
$ setenv ESMF_RUNTIME_TRACE_FLUSH EAGER
```

53.2.6 Set the Clock used for Profiling/Tracing

There are three options for the kind of clock to use to timestamp events when profiling/tracing an application. These options are controlled by setting the environment variable ESMF_RUNTIME_TRACE_CLOCK.

REALTIME The REALTIME clock timestamps events with the current time on the system. This is the default clock if the above environment variable is not set. This setting can be useful when tracing PETs that span multiple physical computing nodes assuming that the system clocks on each node are adequately synchronized. On most HPC systems, system clocks are periodically updated to stay in sync. A disadvantage of this clock is that periodic adjustments mean the clock is not monotonically increasing so some timings may be inaccurate if the system clock jumps forward or backward significantly. Testing has shown that this is not typically an issue on most systems.

MONOTONIC The MONOTONIC clock is guaranteed to be monotonically increasing and does not suffer from periodic adjustments. The timestamps represent an amount of time since some arbitrary point in the past. There is no guarantee that these timestamps will be synchronized across physical computing nodes, so this option should only be used for tracing a set of PETs running on a single physical machine.

MONOTONIC_SYNC The MONOTONIC_SYNC clock is similar to the MONOTONIC clock in that it is guaranteed to be monotonically increasing. In addition, at application startup, all PET clocks are synchronized to a common time by determining a PET-local offset to be applied to timestamps. Therefore this option can be used to compare trace streams across physical nodes.

53.2.7 Tracing a simple ESMF application

This example illustrates how to trace a simple ESMF application and print the event stream using Babeltrace. The first part of the code is a module representing a trivial ESMF Gridded Component. The second part is a main program that creates and executes the component.

```
module SimpleComp

  use ESMF
  implicit none

  private
  public SetServices

contains

  subroutine SetServices(gcomp, rc)
      type(ESMF_GridComp)   :: gcomp
      integer, intent(out)  :: rc

      call ESMF_GridCompSetEntryPoint(gcomp, ESMF_METHOD_INITIALIZE, &
           userRoutine=Init, rc=rc)
      call ESMF_GridCompSetEntryPoint(gcomp, ESMF_METHOD_RUN, &
           userRoutine=Run, rc=rc)
      call ESMF_GridCompSetEntryPoint(gcomp, ESMF_METHOD_FINALIZE, &
           userRoutine=Finalize, rc=rc)

      rc = ESMF_SUCCESS

    end subroutine SetServices

    subroutine Init(gcomp, istate, estate, clock, rc)
      type(ESMF_GridComp):: gcomp
      type(ESMF_State):: istate, estate
      type(ESMF_Clock):: clock
      integer, intent(out):: rc

      print *, "Inside Init"

    end subroutine Init

    subroutine Run(gcomp, istate, estate, clock, rc)
      type(ESMF_GridComp):: gcomp
      type(ESMF_State):: istate, estate
      type(ESMF_Clock):: clock
      integer, intent(out):: rc

      print *, "Inside Run"

    end subroutine Run

    subroutine Finalize(gcomp, istate, estate, clock, rc)
      type(ESMF_GridComp):: gcomp
      type(ESMF_State):: istate, estate
      type(ESMF_Clock):: clock
      integer, intent(out):: rc

    print *, "Inside Finalize"

  end subroutine Finalize
```

```
end module SimpleComp

program ESMF_TraceEx

      ! Use ESMF framework module
      use ESMF
      use SimpleComp, only: SetServices

      implicit none

      ! Local variables
      integer :: rc, finalrc, i
      type(ESMF_GridComp)     :: gridcomp

      ! initialize ESMF
      finalrc = ESMF_SUCCESS
      call ESMF_Initialize(vm=vm, defaultlogfilename="TraceEx.Log", &
                   logkindflag=ESMF_LOGKIND_MULTI, rc=rc)

      ! create the component and then execute
      ! initialize, run, and finalize routines
      gridcomp = ESMF_GridCompCreate(name="test", rc=rc)

      call ESMF_GridCompSetServices(gridcomp, userRoutine=SetServices, rc=rc)

      call ESMF_GridCompInitialize(gridcomp, rc=rc)

      do i=1, 5
         call ESMF_GridCompRun(gridcomp, rc=rc)
      enddo

      call ESMF_GridCompFinalize(gridcomp, rc=rc)

      call ESMF_GridCompDestroy(gridcomp, rc=rc)

      call ESMF_Finalize(rc=rc)

end program ESMF_TraceEx
```

Assuming the code above is executed on four PETs with the environment variable `ESMF_RUNTIME_TRACE` set to `ON`, then a folder will be created in the run directory called *traceout* containing a *metadata* file and four event stream files named *esmf_stream_XXXX* where *XXXX* is the PET number. If Babeltrace is available on the system, the list of events can be printed by executing the following from the run directory:

```
$ babeltrace ./traceout
```

For details about iterating over trace events and performing analyses on CTF traces, see the corresponding documentation in the tools listed in Section 53.1.2.

53.2.8 Profiling/Tracing User-defined Code Regions

This example illustrates how to manually instrument code with entry and exit points for user-defined code regions. Note that the API calls `ESMF_TraceRegionEnter` and `ESMF_TraceRegionExit` should always appear in pairs, wrapping a particular section of code. The environment variable `ESMF_RUNTIME_TRACE` or `ESMF_RUNTIME_PROFILE` must be set to `ON` to enable these regions. If not at least one is set, the calls to `ESMF_TraceRegionEnter` and `ESMF_TraceRegionExit` will simply return immediately. For this reason, it is safe to leave this instrumentation in application code, even when not being profiled.

```
! Use ESMF framework module
use ESMF

implicit none

! Local variables
integer :: rc, finalrc
integer :: i, j, tmp

! initialize ESMF
finalrc = ESMF_SUCCESS
call ESMF_Initialize(vm=vm, defaultlogfilename="TraceUserEx.Log", &
              logkindflag=ESMF_LOGKIND_MULTI, rc=rc)

! record entrance into "outer_region"
call ESMF_TraceRegionEnter("outer_region", rc=rc)

tmp = 0
do i=1, 10

   ! record entrance into "inner_region_1"
   call ESMF_TraceRegionEnter("inner_region_1", rc=rc)
   ! arbitrary computation
   do j=1,10000
      tmp=tmp+j+i
   enddo
   ! record exit from "inner_region_1"
   call ESMF_TraceRegionExit("inner_region_1", rc=rc)

   tmp = 0

   ! record entrance into "inner_region_2"
   call ESMF_TraceRegionEnter("inner_region_2", rc=rc)
   ! arbitrary computation
   do j=1,5000
      tmp=tmp+j+i
   enddo
   ! record exit from "inner_region_2"
   call ESMF_TraceRegionExit("inner_region_2", rc=rc)
enddo

! record exit from "outer_region"
call ESMF_TraceRegionExit("outer_region", rc=rc)

call ESMF_Finalize(rc=rc)
```

53.3 Restrictions and Future Work

1. **Limited types of trace events.** Currently only a few trace event types are available. The tracer may be extended in the future to record additional types of events.
2. **MPI call profing not available for statically linked executables on Darwin.** Currently the linker on Darwin systems does not support the wrapping of symbols during static linking. In order to access MPI call profiling on Darwin, executables should be linked dynamically in combination with the procedure described in section 53.2.4.

53.4 Class API

53.4.1 ESMF_TraceRegionEnter - Trace user-defined region entry event

INTERFACE:

```
subroutine ESMF_TraceRegionEnter(name, rc)
```

ARGUMENTS:

```
character(len=*), intent(in) :: name
integer, intent(out), optional  :: rc
```

DESCRIPTION:

Record an event in the trace for this PET indicating entry into a user-defined region with the given name. This call must be paired with a call to `ESMF_TraceRegionExit()` with a matching `name` parameter. User-defined regions may be nested. If tracing is disabled on the calling PET or for the application as a whole, no event will be recorded and the call will return immediately.

The arguments are:

name A user-defined name for the region of code being entered

[rc] Return code; equals `ESMF_SUCCESS` if there are no errors.

53.4.2 ESMF_TraceRegionExit - Trace user-defined region exit event

INTERFACE:

```
subroutine ESMF_TraceRegionExit(name, rc)
```

ARGUMENTS:

```
character(len=*), intent(in) :: name
integer, intent(out), optional  :: rc
```

DESCRIPTION:

Record an event in the trace for this PET indicating exit from a user-defined region with the given name. This call must appear after a call to `ESMF_TraceRegionEnter()` with a matching `name` parameter. If tracing is disabled on the calling PET or for the application as a whole, no event will be recorded and the call will return immediately.

The arguments are:

name A user-defined name for the region of code being exited

[rc] Return code; equals `ESMF_SUCCESS` if there are no errors.

54 Fortran I/O and System Utilities

54.1 Description

The ESMF Fortran I/O and System utilities provide portable methods to access capabilities which are often implemented in different ways amongst different environments. These utility methods are divided into three groups: command line access, Fortran I/O, and sorting.

Command line arguments may be accessed using three methods: `ESMF_UtilGetArg()` returns a given command line argument, `ESMF_UtilGetArgC()` returns a count of the number of command line arguments available. Finally, the `ESMF_UtilGetArgIndex()` method returns the index of a desired argument value, given its keyword name.

Two I/O methods are implemented: `ESMF_IOUnitGet()`, to obtain an unopened Fortran unit number within the range of unit numbers that ESMF is allowed to use, and `ESMF_IOUnitFlush()` to flush the I/O buffer associated with a specific Fortran unit.

Finally, the `ESMF_UtilSort()` method sorts integer, floating point, and character string data types in either ascending or descending order.

54.2 Use and Examples

54.2.1 Fortran unit number management

The `ESMF_UtilIOUnitGet()` method is provided so that applications using ESMF can remain free of unit number conflicts — both when combined with other third party code, or with ESMF itself. This call is typically used just prior to an `OPEN` statement:

```
call ESMF_UtilIOUnitGet (unit=grid_unit, rc=rc)
open (unit=grid_unit, file='grid_data.dat', status='old', action='read')
```

By default, unit numbers between 50 and 99 are scanned to find an unopened unit number.

Internally, ESMF also uses `ESMF_UtilIOUnitGet()` when it needs to open Fortran unit numbers for file I/O. By using the same API for both user and ESMF code, unit number collisions can be avoided.

When integrating ESMF into an application where there are conflicts with other uses of the same unit number range, such as when hard-coded unit number values are used, an alternative unit number range can be specified. The `ESMF_Initialize()` optional arguments `IOUnitLower` and `IOUnitUpper` may be set as needed. Note that

IOUnitUpper must be set to a value higher than IOUnitLower, and that both must be non-negative. Otherwise ESMF_Initialize will return a return code of ESMF_FAILURE. ESMF itself does not typically need more than about five units for internal use.

```
call ESMF_Initialize (..., IOUnitLower=120, IOUnitUpper=140)
```

All current Fortran environments have preconnected unit numbers, such as units 5 and 6 for standard input and output, in the single digit range. So it is recommended that the unit number range is chosen to begin at unit 10 or higher to avoid these preconnected units.

54.2.2 Flushing output

Fortran run-time libraries generally use buffering techniques to improve I/O performance. However output buffering can be problematic when output is needed, but is "trapped" in the buffer because it is not full. This is a common occurrance when debugging a program, and inserting WRITE statements to track down the bad area of code. If the program crashes before the output buffer has been flushed, the desired debugging output may never be seen — giving a misleading indication of where the problem occurred. It would be desirable to ensure that the output buffer is flushed at predictable points in the program in order to get the needed results. Likewise, in parallel code, predictable flushing of output buffers is a common requirement, often in conjunction with ESMF_VMBarrier() calls.

The ESMF_UtilIOUnitFlush() API is provided to flush a unit as desired. Here is an example of code which prints debug values, and serializes the output to a terminal in PET order:

```
type(ESMF_VM) :: vm

integer :: tty_unit
integer :: me, npets

call ESMF_Initialize (vm=vm, rc=rc)
call ESMF_VMGet (vm, localPet=me, petCount=npes)

call ESMF_UtilIOUnitGet (unit=tty_unit)
open (unit=tty_unit, file='/dev/tty', status='old', action='write')
...
call ESMF_VMBarrier (vm=vm)
do, i=0, npets-1
  if (i == me) then
    write (tty_unit, *) 'PET: ', i, ', values are: ', a, b, c
    call ESMF_UtilIOUnitFlush (unit=tty_unit)
  end if
  call ESMF_VMBarrier (vm=vm)
end do
```

54.3 Design and Implementation Notes

54.3.1 Fortran unit number management

When ESMF needs to open a Fortran I/O unit, it calls ESMF_IOUnitGet() to find an unopened unit number. As delivered, the range of unit numbers that are searched are between ESMF_LOG_FORTRAN_UNIT_NUMBER (normally

set to 50), and ESMF_LOG_UPPER (normally set to 99.) Unopened unit numbers are found by using the Fortran INQUIRE statement.

When integrating ESMF into an application where there are conflicts with other uses of the same unit number range, an alternative range can be specified in the ESMF_Initialize() call by setting the IOUnitLower and IOUnitUpper arguments as needed. ESMF_IOUnitGet() will then search the alternate range of unit numbers. Note that IOUnitUpper must be set to a value higher than IOUnitLower, and that both must be non-negative. Otherwise ESMF_Initialize will return a return code of ESMF_FAILURE.

Fortran unit numbers are not standardized in the Fortran 90 Standard. The standard only requires that they be non-negative integers. But other than that, it is up to the compiler writers and application developers to provide and use units which work with the particular implementation. For example, units 5 and 6 are a defacto standard for "standard input" and "standard output" — even though this is not specified in the actual Fortran standard. The Fortran standard also does not specify which unit numbers can be used, nor does it specify how many can be open simultaneously.

Since all current compilers have preconnected unit numbers, and these are typically found on units lower than 10, it is recommended that applications use unit numbers 10 and higher.

54.3.2 Flushing output

When ESMF needs to flush a Fortran unit, the ESMF_IOUnitFlush() API is used to centralize the file flushing capability, because Fortran has not historically had a standard mechanism for flushing output buffers. Most compilers run-time libraries support various library extensions to provide this functionality — though, being non-standard, the spelling and number of arguments vary between implementations. Fortran 2003 also provides for a FLUSH statement which is built into the language. When possible, ESMF_IOUnitFlush() uses the F2003 FLUSH statement. With older compilers, the appropriate library call is made.

54.3.3 Sorting algorithms

The ESMF_UtilSort() algorithms are the same as those in the LAPACK sorting procedures SLASRT() and DLASRT(). Two algorithms are used. For small sorts, arrays with 20 or fewer elements, a simple Insertion sort is used. For larger sorts, a Quicksort algorithm is used.

Compared to the original LAPACK code, a full Fortran 90 style interface is supported for ease of use and enhanced compile time checking. Additional support is also provided for integer and character string data types.

54.4 Utility API

54.4.1 ESMF_UtilGetArg - Return a command line argument

INTERFACE:

```
subroutine ESMF_UtilGetArg(argindex, argvalue, arglength, rc)
```

ARGUMENTS:

```
     integer,      intent(in)            :: argindex
 -- The following arguments require argument keyword syntax (e.g. rc=rc). --
     character(*), intent(out), optional :: argvalue
     integer,      intent(out), optional :: arglength
     integer,      intent(out), optional :: rc
```

STATUS:

- This interface is backward compatible with ESMF versions starting at 5.2.0r. If code using this interface compiles with any version of ESMF starting with 5.2.0r, then it will compile with the current version.

DESCRIPTION:

This method returns a copy of a command line argument specified when the process was started. This argument is the same as an equivalent C++ program would find in the argv array.

Some MPI implementations do not consistently provide command line arguments on PETs other than PET 0. It is therefore recommended that PET 0 call this method and broadcast the results to the other PETs by using the `ESMF_VMBroadcast()` method.

The arguments are:

argindex A non-negative index into the command line argument `argv` array. If argindex is negative or greater than the number of user-specified arguments, `ESMF_RC_ARG_VALUE` is returned in the `rc` argument.

[argvalue] Returns a copy of the desired command line argument. If the provided character string is longer than the command line argument, the string will be blank padded. If the string is too short, truncation will occur and `ESMF_RC_ARG_SIZE` is returned in the `rc` argument.

[arglength] Returns the length of the desired command line argument in characters. The length result does not depend on the length of the `value` string. It may be used to query the length of the argument.

[rc] Return code; equals `ESMF_SUCCESS` if there are no errors.

54.4.2 ESMF_UtilGetArgC - Return number of command line arguments

INTERFACE:

```
subroutine ESMF_UtilGetArgC(count, rc)
```

ARGUMENTS:

```
     integer, intent(out)           :: count
 -- The following arguments require argument keyword syntax (e.g. rc=rc). --
     integer, intent(out), optional :: rc
```

STATUS:

- This interface is backward compatible with ESMF versions starting at 5.2.0r. If code using this interface compiles with any version of ESMF starting with 5.2.0r, then it will compile with the current version.

DESCRIPTION:

This method returns the number of command line arguments specified when the process was started.

The number of arguments returned does not include the name of the command itself - which is typically returned as argument zero.

Some MPI implementations do not consistently provide command line arguments on PETs other than PET 0. It is therefore recommended that PET 0 call this method and broadcast the results to the other PETs by using the `ESMF_VMBroadcast()` method.

The arguments are:

count Count of command line arguments.

[rc] Return code; equals `ESMF_SUCCESS` if there are no errors.

54.4.3 ESMF_UtilGetArgIndex - Return the index of a command line argument

INTERFACE:

```
subroutine ESMF_UtilGetArgIndex(argvalue, argindex, rc)
```

ARGUMENTS:

```
    character(*), intent(in)            :: argvalue
-- The following arguments require argument keyword syntax (e.g. rc=rc). --
    integer,      intent(out), optional :: argindex
    integer,      intent(out), optional :: rc
```

STATUS:

- This interface is backward compatible with ESMF versions starting at 5.2.0r. If code using this interface compiles with any version of ESMF starting with 5.2.0r, then it will compile with the current version.

DESCRIPTION:

This method searches for, and returns the index of a desired command line argument. An example might be to find a specific keyword (e.g., -esmf_path) so that its associated value argument could be obtained by adding 1 to the argindex and calling `ESMF_UtilGetArg()`.

Some MPI implementations do not consistently provide command line arguments on PETs other than PET 0. It is therefore recommended that PET 0 call this method and broadcast the results to the other PETs by using the `ESMF_VMBroadcast()` method.

The arguments are:

argvalue A character string which will be searched for in the command line argument list.

[argindex] If the `value` string is found, the position will be returned as a non-negative integer. If the string is not found, a negative value will be returned.

[rc] Return code; equals `ESMF_SUCCESS` if there are no errors.

54.4.4 ESMF_UtilIOGetCWD - Get the current directory

INTERFACE:

```
subroutine ESMF_UtilIOGetCWD (pathName, rc)
```

PARAMETERS:

```
     character(*), intent(out)           :: pathName
 -- The following arguments require argument keyword syntax (e.g. rc=rc). --
     integer,      intent(out), optional :: rc
```

DESCRIPTION:

Call the system-dependent routine to get the current directory from the file system.

The arguments are:

pathName Name of the current working directory.

[rc] Return code; equals `ESMF_SUCCESS` if there are no errors.

54.4.5 ESMF_UtilIOMkDir - Create a directory in the file system

INTERFACE:

```
subroutine ESMF_UtilIOMkDir (pathName,  &
    mode, relaxedFlag,  &
    rc)
```

PARAMETERS:

```
      character(*), intent(in)            :: pathName
 -- The following arguments require argument keyword syntax (e.g. rc=rc). --
      integer,      intent(in),  optional :: mode
      logical,      intent(in),  optional :: relaxedFlag
      integer,      intent(out), optional :: rc
```

DESCRIPTION:

Call the system-dependent routine to create a directory in the file system.

The arguments are:

pathName Name of the directory to be created.

[mode] File permission mode. Typically an octal constant is used as a value, for example: `mode=o'755'`. If not specified on POSIX-compliant systems, the default is `o'755'` - corresponding to owner read/write/execute, group read/execute, and world read/execute. On native Windows, this argument is ignored and default security settings are used.

[relaxedFlag] When set to `.true.`, if the directory already exists, `rc` will be set to `ESMF_SUCCESS` instead of an error. If not specified, the default is `.false.`.

[rc] Return code; equals `ESMF_SUCCESS` if there are no errors.

54.4.6 ESMF_UtilIORmDir - Remove a directory from the file system

INTERFACE:

```
    subroutine ESMF_UtilIORmDir (pathName,  &
        relaxedFlag, rc)
```

PARAMETERS:

```
      character(*), intent(in)            :: pathName
 -- The following arguments require argument keyword syntax (e.g. rc=rc). --
      logical,      intent(in),  optional :: relaxedFlag
      integer,      intent(out), optional :: rc
```

DESCRIPTION:

Call the system-dependent routine to remove a directory from the file system. Note that the directory must be empty in order to be successfully removed.

The arguments are:

pathName Name of the directory to be removed.

[relaxedFlag] If set to `.true.`, and if the specified directory does not exist, the error is ignored and `rc` will be set to `ESMF_SUCCESS`. If not specified, the default is `.false.`.

[rc] Return code; equals `ESMF_SUCCESS` if there are no errors.

54.4.7 ESMF_UtilString2Double - Convert a string to floating point real

INTERFACE:

```
function ESMF_UtilString2Double(string, rc)
```

RETURN VALUE:

```
real(ESMF_KIND_R8) :: ESMF_UtilString2Double
```

ARGUMENTS:

```
     character(len=*), intent(in)            :: string
 -- The following arguments require argument keyword syntax (e.g. rc=rc). --
     integer,          intent(out), optional :: rc
```

DESCRIPTION:

Return the numerical real value represented by the `string`.

Leading and trailing blanks in `string` are ignored when directly converting into integers.

This procedure may fail when used in an expression in a `write` statement with some older, pre-Fortran 2003, compiler environments that do not support re-entrant I/O calls.

The arguments are:

string The string to be converted

[rc] Return code; equals `ESMF_SUCCESS` if there are no errors.

54.4.8 ESMF_UtilString2Int - Convert a string to an integer

INTERFACE:

```
function ESMF_UtilString2Int(string,  &
    specialStringList, specialValueList, rc)
```

RETURN VALUE:

```
integer :: ESMF_UtilString2Int
```

ARGUMENTS:

```
     character(len=*), intent(in)            :: string
 -- The following arguments require argument keyword syntax (e.g. rc=rc). --
     character(len=*), intent(in),  optional :: specialStringList(:)
     integer,          intent(in),  optional :: specialValueList(:)
     integer,          intent(out), optional :: rc
```

DESCRIPTION:

Return the numerical integer value represented by the `string`. If `string` matches a string in the optional `specialStringList`, the corresponding special value will be returned instead.

If special strings are to be taken into account, both `specialStringList` and `specialValueList` arguments must be present and of same size.

An error is returned, and return value set to 0, if `string` is not found in `specialStringList`, and does not convert into an integer value.

Leading and trailing blanks in `string` are ignored when directly converting into integers.

This procedure may fail when used in an expression in a `write` statement with some older, pre-Fortran 2003, compiler environments that do not support re-entrant I/O calls.

The arguments are:

string The string to be converted

[specialStringList] List of special strings.

[specialValueList] List of values associated with special strings.

[rc] Return code; equals `ESMF_SUCCESS` if there are no errors.

54.4.9 ESMF_UtilString2Real - Convert a string to floating point real

INTERFACE:

```
function ESMF_UtilString2Real(string, rc)
```

RETURN VALUE:

```
real :: ESMF_UtilString2Real
```

ARGUMENTS:

```
    character(len=*), intent(in)            :: string
 -- The following arguments require argument keyword syntax (e.g. rc=rc). --
    integer,          intent(out), optional :: rc
```

DESCRIPTION:

Return the numerical real value represented by the `string`.

Leading and trailing blanks in `string` are ignored when directly converting into integers.

This procedure may fail when used in an expression in a `write` statement with some older, pre-Fortran 2003, compiler environments that do not support re-entrant I/O calls.

The arguments are:

string The string to be converted

[rc] Return code; equals `ESMF_SUCCESS` if there are no errors.

54.4.10 ESMF_UtilStringInt2String - convert integer to character string

INTERFACE:

```
function ESMF_UtilStringInt2String (i, rc)
```

ARGUMENTS:

```
      integer, intent(in) :: i
 -- The following arguments require argument keyword syntax (e.g. rc=rc). --
      integer, intent(out), optional  :: rc
```

RETURN VALUE:

```
      character(int2str_len (i)) :: ESMF_UtilStringInt2String
```

DESCRIPTION:

Converts given an integer to string representation. The returned string is sized such that it does not contain leading or trailing blanks.

This procedure may fail when used in an expression in a `write` statement with some older, pre-Fortran 2003, compiler environments that do not support re-entrant I/O calls.

The arguments are:

i An integer.

[rc] Return code; equals `ESMF_SUCCESS` if there are no errors.

54.4.11 ESMF_UtilStringLowerCase - convert string to lowercase

INTERFACE:

```
function ESMF_UtilStringLowerCase(string, rc)
```

ARGUMENTS:

```
      character(len=*), intent(in) :: string
 -- The following arguments require argument keyword syntax (e.g. rc=rc). --
      integer, intent(out), optional  :: rc
```

RETURN VALUE:

```
character(len (string)) :: ESMF_UtilStringLowerCase
```

DESCRIPTION:

Converts given string to lowercase.

The arguments are:

string A character string.

[rc] Return code; equals `ESMF_SUCCESS` if there are no errors.

54.4.12 ESMF_UtilStringUpperCase - convert string to uppercase

INTERFACE:

```
function ESMF_UtilStringUpperCase(string, rc)
```

ARGUMENTS:

```
      character(len=*), intent(in) :: string
 -- The following arguments require argument keyword syntax (e.g. rc=rc). --
      integer, intent(out), optional  :: rc
```

RETURN VALUE:

```
character(len (string)) :: ESMF_UtilStringUpperCase
```

DESCRIPTION:

Converts given string to uppercase.

The arguments are:

string A character string.

[rc] Return code; equals `ESMF_SUCCESS` if there are no errors.

54.4.13 ESMF_UtilIOUnitFlush - Flush output on a unit number

INTERFACE:

```
subroutine ESMF_UtilIOUnitFlush(unit, rc)
```

PARAMETERS:

```
     integer, intent(in)            :: unit
 -- The following arguments require argument keyword syntax (e.g. rc=rc). --
     integer, intent(out), optional :: rc
```

STATUS:

- This interface is backward compatible with ESMF versions starting at 5.2.0r. If code using this interface compiles with any version of ESMF starting with 5.2.0r, then it will compile with the current version.

DESCRIPTION:

Call the system-dependent routine to force output on a specific Fortran unit number.

The arguments are:

unit A Fortran I/O unit number. If the unit is not connected to a file, no flushing occurs.

[rc] Return code; equals `ESMF_SUCCESS` if there are no errors.

54.4.14 ESMF_UtilIOUnitGet - Scan for a free I/O unit number

INTERFACE:

```
subroutine ESMF_UtilIOUnitGet(unit, rc)
```

ARGUMENTS:

```
     integer, intent(out)           :: unit
 -- The following arguments require argument keyword syntax (e.g. rc=rc). --
     integer, intent(out), optional :: rc
```

STATUS:

- This interface is backward compatible with ESMF versions starting at 5.2.0r. If code using this interface compiles with any version of ESMF starting with 5.2.0r, then it will compile with the current version.

DESCRIPTION:

Scan for, and return, a free Fortran I/O unit number. By default, the range of unit numbers returned is between 50 and 99 (parameters `ESMF_LOG_FORTRAN_UNIT_NUMBER` and `ESMF_LOG_UPPER` respectively.) When integrating ESMF into an application where these values conflict with other usages, the range of values may be moved by setting the optional `IOUnitLower` and `IOUnitUpper` arguments in the initial `ESMF_Initialize()` call with values in a safe, alternate, range.

The Fortran unit number which is returned is not reserved in any way. Successive calls without intervening `OPEN` or `CLOSE` statements (or other means of connecting to units), might not return a unique unit number. It is recommended that an `OPEN` statement immediately follow the call to `ESMF_IOUnitGet()` to activate the unit.

The arguments are:

unit A Fortran I/O unit number.

[rc] Return code; equals `ESMF_SUCCESS` if there are no errors.

54.4.15 ESMF_UtilSort - Sort data

INTERFACE:

```
subroutine ESMF_UtilSort (list, direction, rc)
```

ARGUMENTS:

```
<list>, see below for supported values
type(ESMF_SortFlag), intent(in) :: direction
integer, intent(out), optional :: rc
```

DESCRIPTION:

Supported values for <list> are:

integer(ESMF_KIND_I4), intent(inout) :: list(:)

integer(ESMF_KIND_I8), intent(inout) :: list(:)

real(ESMF_KIND_R4), intent(inout) :: list(:)

real(ESMF_KIND_R8), intent(inout) :: list(:)

character(len=*), intent(inout) :: list(:)

Use Quick Sort, reverting to Insertion sort on lists of size <= 20.

This is an ESMFized version of SLASRT from LAPACK version 3.1. Univ. of Tennessee, Univ. of California Berkeley and NAG Ltd. November 2006

The arguments are:

list Array of data to be sorted. The original data is overwritten by the sorted data.

direction Direction of sorting. Legal values are `ESMF_SORTFLAG_ASCENDING` and `ESMF_SORTFLAG_DESCENDING`.

[rc] Return code; equals `ESMF_SUCCESS` if the sorting is successful.

Part VI

References

References

[1] *JSON for Modern C++*, 2020 (accessed February 2020). https://github.com/nlohmann/json.

[2] *JSON for Modern C++ 64-Bit Float*, 2020 (accessed February 2020). https://nlohmann.github.io/json/classnlohmann_1_1basic__json_a88d6103cb3620410b35200ee8

[3] *JSON for Modern C++ 64-Bit Integer*, 2020 (accessed February 2020). https://nlohmann.github.io/json/classnlohmann_1_1basic__json_a98e611d67b7bd75307de99c93

[4] *JSON for Modern C++ Is Structured*, 2020 (accessed February 2020). https://nlohmann.github.io/json/classnlohmann_1_1basic__json_a9f68a0af820c3ced7f9d17851

[5] *JSON for Modern C++ JSON Pointer*, 2020 (accessed February 2020). https://nlohmann.github.io/json/classnlohmann_1_1json__pointer_a7f32d7c62841f0c4a6784cf

[6] *JSON for Modern C++ Memory Efficiency*, 2020 (accessed February 2020). https://github.com/nlohmann/json#design-goals.

[7] *JSON for Modern C++ Null Value*, 2020 (accessed February 2020). https://nlohmann.github.io/json/classnlohmann_1_1basic__json_a8faa039ca82427ed29c486ffd

[8] *JSON for Modern C++ Object*, 2020 (accessed February 2020). https://nlohmann.github.io/json/classnlohmann

[9] *JSON for Modern C++ Type Name*, 2020 (accessed February 2020). https://nlohmann.github.io/json/classnlohmann_1_1basic__json_ad14563c53cf7ca9189bc16408

[10] *JSON for Modern C++ Update*, 2020 (accessed February 2020). https://nlohmann.github.io/json/classnlohman

[11] *JSON*, 2020 (accessed March 2020). https://www.json.org/json-en.html.

[12] A Julian Day and Civil Date Calculator. http://www.numerical-recipes.com/julian.html, last accessed on Dec 3, 2015.

[13] SCRIP: A Spherical Coordinate Remapping and Interpolation Package. http://oceans11.lanl.gov/trac/SCRIP, last accessed on Dec 4, 2015. Los Alamos Software Release LACC 98-45.

[14] Some notes on the ISO 8601 date and time specification standard. http://en.wikipedia.org/wiki/ISO_8601 http://www.iso.ch/iso/en/prods-services/popstds/datesandtime.html, last accessed on Dec 4, 2015.

[15] NetCDF Climate and Forecast (CF) Metadata Conventions. http://cfconventions.org/, last accessed on Nov 27, 2015.

[16] NetCDF Users Guide for C, Version 3. http://www.unidata.ucar.edu/software/netcdf/docs, last accessed on Nov 27, 2015.

[17] V. Balaji, Jeff Anderson, Isaac Held, Michael Winton, Jeff Durachta, Sergey Malyshev, and Ronald J. Stouffer. The exchange grid: a mechanism for data exchange between earth system components on independent grids. *Parallel Computational Fluid Dynamics: Theory and Applications, Proceedings of the 2005 International Conference on Parallel Computational Fluid Dynamics*, 2006.

[18] E. G. Boman, U. V. Catalyurek, C. Chevalier, and K. D. Devine. The Zoltan and Isorropia parallel toolkits for combinatorial scientific computing: Partitioning, ordering, and coloring. *Scientific Programming*, 20(2), 2012.

[19] Y. Meurdesoif E. Kritsikis, M. Aechtner and T. Dubos. Conservative interpolation between general spherical meshes. *Geoscientific Model Development*, 10, 2017.

[20] H. C. Edwards, A. B. Williams, G. D. Sjaardema, D. G. Baur, and W. K. Cochran. SIERRA toolkit computational mesh conceptual model. Technical Report SAND2010-1192, Sandia National Laboratories, Albuquerque, New Mexico 87185, March 2010.

[21] Fliegel, H.F. and Van Flandern, T.C. A Machine Algorithm for Processing Calendar Dates. *Communications of the ACM*, 11(10):657, 1968.

[22] H. Gu, Z. Zong, and K.C. Hung. A modified superconvergent patch recovery method and its application to large deformation problems. *Finite Elements in Analysis and Design*, 40(5-6), 2004.

[23] Hatcher, D.A. Simple Formulae for Julian Day Numbers and Calendar Dates. *Q.JlR. astr. Soc.*, 25(1):53–55, 1984.

[24] International Organization for Standardization. Standard 8601:2004, Data elements and interchange formats – Information interchange – Representation of dates and times. http://www.iso.ch/iso/en/CatalogueDetailPage.CatalogueDetail?CSNUMBER=40874&COMMID=&scopelist=, last accessed on Dec 4, 2015.

[25] A.R. Khoei and S.A. Gharehbaghi. The superconvergent patch recovery technique and data transfer operators in 3d plasticity problems. *Finite Elements in Analysis and Design*, 43(8), 2007.

[26] Peter Meyer. A good discussion of Gregorian and Julian Calendars. http://www.hermetic.ch/cal_stud/cal_art.html, last accessed on Nov 27, 2015.

[27] Peter Meyer. A good discussion of Julian Day Numbers. http://www.hermetic.ch/cal_stud/jdn.htm, last accessed on Nov 27, 2015.

[28] D. Ramshaw. Conservative rezoning algorithm for generalized two-dimensional meshes. *Journal of Computational Physics*, 59, 1985.

[29] J. Rumbaugh, I. Jacobson, and G. Booch. *The Unified Modeling Language Reference Manual*. Addison-Wesley, 1999.

[30] Seidelman, P.K. *Explanatory Supplement to the Astronomical Almanac*. University Science Books, 1992.

[31] Gernot M.R. Winkler. A good discussion of the Modified Julian Day Calendar. http://tycho.usno.navy.mil/mjd.html, last accessed on Nov 27, 2015.

Part VII

Appendices

55 Appendix A: Master List of Constants

55.1 ESMF_ALARMLIST

This flag is documented in section 47.2.1.

55.2 ESMF_DIM_ARB

DESCRIPTION:
An integer named constant which is used to indicate that a particular dimension is arbitrarily distributed.

55.3 ESMF_ATTCOPY

This flag is documented in section 58.1.1.

55.4 ESMF_ATTGETCOUNT

This flag is documented in section 58.1.2.

55.5 ESMF_ATTNEST

DESCRIPTION:
Indicate whether or not to descend the Attribute hierarchy.

The type of this flag is:

`type(ESMF_AttNest_Flag)`

The valid values are:

ESMF_ATTNEST_ON Indicates that the Attribute hierarchy should be traversed.

ESMF_ATTNEST_OFF Indicates that the Attribute hierarchy should not be traversed.

55.6 ESMF_ATTRECONCILE

DESCRIPTION:
Indicate whether or not to handle metadata (Attributes) in `ESMF_StateReconcile()`.

The type of this flag is:

`type(ESMF_AttReconcileFlag)`

The valid values are:

ESMF_ATTRECONCILE_ON Attribute reconciliation will be turned on.

ESMF_ATTRECONCILE_OFF Attribute reconciliation will be turned off.

55.7 ESMF_ATTWRITE

This flag is documented in section 58.1.3.

55.8 ESMF_CALKIND

This flag is documented in section 43.2.1.

55.9 ESMF_COMPTYPE

DESCRIPTION:
Indicate the type of a Component.

The type of this flag is:

`type(ESMF_CompType_Flag)`

The valid values are:

ESMF_COMPTYPE_GRID A `ESMF_GridComp` object.

ESMF_COMPTYPE_CPL A `ESMF_CplComp` objects.

ESMF_COMPTYPE_SCI A `ESMF_SciComp` objects.

55.10 ESMF_CONTEXT

DESCRIPTION:
Indicates the type of VM context in which a Component will be executing its standard methods.

The type of this flag is:

`type(ESMF_Context_Flag)`

The valid values are:

ESMF_CONTEXT_OWN_VM The component is running in its own, separate VM context. Resources are inherited from the parent but can be arranged to fit the component's requirements.

ESMF_CONTEXT_PARENT_VM The component uses the parent's VM for resource management. Compared to components that use their own VM context components that run in the parent's VM context are more light-weight with respect to the overhead of calling into their initialize, run and finalize methods. Furthermore, VM-specific properties remain unchanged when going from the parent component to the child component. These properties include the MPI communicator, the number of PETs, the PET labeling, communication attributes, threading-level.

55.11 ESMF_COORDSYS

DESCRIPTION:
A set of values which indicates in which system the coordinates in a class (e.g. Grid) are. This type is useful both to indicate to other users the type of the coordinates, but also to control how the coordinates are interpreted in ESMF methods which depend on the coordinates (e.g. regridding methods like `ESMF_FieldRegridStore()`).

The type of this flag is:

`type(ESMF_CoordSys_Flag)`

The valid values are:

ESMF_COORDSYS_CART Cartesian coordinate system. In this system, the Cartesian coordinates are mapped to the coordinate dimensions in the following order: x,y,z. (E.g. using `coordDim=2` in ESMF_GridGetCoord() references the y dimension)

ESMF_COORDSYS_SPH_DEG Spherical coordinates in degrees. In this system, the spherical coordinates are mapped to the coordinate dimensions in the following order: longitude, latitude, radius. (E.g. using `coordDim=2` in ESMF_GridGetCoord() references the latitude dimension.)

ESMF_COORDSYS_SPH_RAD Spherical coordinates in radians. In this system, the spherical coordinates are mapped to the coordinate dimensions in the following order: longitude, latitude, radius. (E.g. using `coordDim=2` in ESMF_GridGetCoord() references the latitude dimension.)

55.12 ESMF_CUBEDSPHERECALC

DESCRIPTION:
Indicates the method used to calculate coordinates during cubed sphere creation.

The type of this flag is:

`type(ESMF_CubedSphereCalc_Flag)`

The valid values are:

ESMF_CUBEDSPHERECALC_1TILE: This is the original method used to calculate coordinates for the ESMF cubed sphere. It uses an array the size of one tile of the cubed sphere on each PET to calculate coordinates and ensure their symmetry.

ESMF_CUBEDSPHERECALC_LOCAL: This method just uses an array large enough to hold the local cubed sphere coordinates on each PET. It relies on careful design of loops and calculation to ensure symmetry of the coordinates. This method will in general use less memory than ESMF_CUBEDSPHERECALC_1TILE.

55.13 ESMF_DATACOPY

DESCRIPTION:
Indicates how data references, copies, and memory allocations to hold data are handled.

The type of this flag is:

`type(ESMF_DataCopy_Flag)`

The valid values are:

ESMF_DATACOPY_ALLOC Create a new allocation that is sufficient in size to hold the data. However, no data is copied and the allocation is returned uninitialized.

ESMF_DATACOPY_REFERENCE Reference the data within the existing allocation.

ESMF_DATACOPY_VALUE Copy the data to another allocation. If needed create the new allocation.

55.14 ESMF_DECOMP

DESCRIPTION:
Indicates how DistGrid elements are decomposed over DEs.

The type of this flag is:

`type(ESMF_Decomp_Flag)`

The valid values are:

ESMF_DECOMP_BALANCED Decompose elements as balanced as possible across DEs. The maximum difference in number of elements per DE is 1, with the extra elements on the lower DEs.

ESMF_DECOMP_CYCLIC Decompose elements cyclically across DEs.

ESMF_DECOMP_RESTFIRST Divide elements over DEs. Assign the rest of this division to the first DE.

ESMF_DECOMP_RESTLAST Divide elements over DEs. Assign the rest of this division to the last DE.

ESMF_DECOMP_SYMMEDGEMAX Decompose elements across the DEs in a symmetric fashion. Start with the maximum number of elements at the two edge DEs, and assign a decending number of elements to the DEs as the center of the decomposition is approached from both sides.

55.15 ESMF_DIRECTION

This flag is documented in section 46.2.1.

55.16 ESMF_DISTGRIDMATCH

This flag is documented in section 37.2.1.

55.17 ESMF_END

This flag is documented in section 16.2.1.

55.18 ESMF_EXTRAPMETHOD

DESCRIPTION:
Specify which extrapolation method to use on unmapped destination points after regridding.

The type of this flag is:

`type(ESMF_ExtrapMethod_Flag)`

The valid values are:

ESMF_EXTRAPMETHOD_NONE Indicates that no extrapolation should be done.

ESMF_EXTRAPMETHOD_NEAREST_IDAVG Inverse distance weighted average. Here the value of an unmapped destination point is the weighted average of the closest N source points. The weight is the reciprocal of the distance of the source point from the destination point raised to a power P. All the weights contributing to one destination point are normalized so that they sum to 1.0. The user can choose N and P when using this method, but defaults are also provided. This extrapolation method is not supported with conservative regrid methods (e.g. `ESMF_REGRIDMETHOD_CONSERVE`).

ESMF_EXTRAPMETHOD_NEAREST_STOD Nearest source to destination. Here the value of each unmapped destination point is set to the value of the closest source point. This extrapolation method is not supported with conservative regrid methods (e.g. `ESMF_REGRIDMETHOD_CONSERVE`).

ESMF_EXTRAPMETHOD_NEAREST_D Nearest mapped destination to unmapped destination. Here the value of each unmapped destination point is set to the value of the closest mapped (i.e. regridded) destination point. This extrapolation method is not supported with conservative regrid methods (e.g. `ESMF_REGRIDMETHOD_CONSERVE`).

ESMF_EXTRAPMETHOD_CREEP Creep fill. Here unmapped destination points are filled by moving data from mapped locations to neighboring unmapped locations. The data filled into a new location is the average of its already filled neighbors' values. This process is repeated for a user specified number of levels (e.g. in ESMF_FieldRegridStore() this is specified via the `extrapNumLevels` argument). This extrapolation method is not supported with conservative regrid methods (e.g. `ESMF_REGRIDMETHOD_CONSERVE`).

ESMF_EXTRAPMETHOD_CREEP_NRST_D Creep fill with nearest destination. Here unmapped destination points are filled using creep fill as described under that entry (see ESMF_EXTRAPMETHOD_CREEP above), any points not filled by creep fill are then set to the closest filled or mapped destination point as if the nearest destination method (see ESMF_EXTRAPMETHOD_NEAREST_D above) were run after the initial regridding followed by creep fill. Like creep fill, this method is repeated for a user specified number of levels (e.g. in ESMF_FieldRegridStore() this is specified via the `extrapNumLevels` argument). This extrapolation method is not supported with conservative regrid methods (e.g. `ESMF_REGRIDMETHOD_CONSERVE`).

55.19 ESMF_FIELDSTATUS

This flag is documented in section 27.2.1.

55.20 ESMF_FILEFORMAT

DESCRIPTION:

This flag is used in `ESMF_GridCreate` and `ESMF_MeshCreate` functions. It is also used in the `ESMF_RegridWeightGen` API as an optional argument.

The type of this flag is:

`type(ESMF_FileFormat_Flag)`

The valid values are:

ESMF_FILEFORMAT_CFGRID A single tile logically rectangular grid file that follows the NetCDF CF convention. See section 12.8.3 for more detailed description.

ESMF_FILEFORMAT_ESMFMESH ESMF unstructured grid file format. This format was developed by the ESMF team to match the capabilities of the Mesh class and to be efficient to convert to that class. See section 12.8.2 for more detailed description.

ESMF_FILEFORMAT_GRIDSPEC Equivalent to `ESMF_FILEFORMAT_CFGRID` flag.

ESMF_FILEFORMAT_MOSAIC This format is a proposed extension to the CF-conventions for grid mosaics consisting of multiple logically rectangular grid tiles. See section 12.8.5 for more detailed description.

ESMF_FILEFORMAT_SCRIP SCRIP format grid file. The SCRIP format is the format accepted by the SCRIP regridding tool [13]. See section12.8.1 for more detailed description.

ESMF_FILEFORMAT_UGRID CF-convention unstructured grid file format. This format is a proposed extension to the CF-conventions for unstructured grid data model. See section 12.8.4 for more detailed description.

55.21 ESMF_FILEMODE

DESCRIPTION:
This flag is used to indicate which mode to use when writing a weight file.

The type of this flag is:

`type(ESMF_FileMode_Flag)`

The valid values are:

ESMF_FILEMODE_BASIC Indicates that only the factorList and factorIndexList should be written.

ESMF_FILEMODE_WITHAUX Indicates that grid center coordinates should also be written.

55.22 ESMF_FILESTATUS

DESCRIPTION:
This flag is used in ESMF I/O functions. It's use is similar to the `status` keyword in the Fortran `open` statement.

The type of this flag is:

`type(ESMF_FileStatus_Flag)`

The valid values are:

ESMF_FILESTATUS_NEW The file must not exist, it will be created.

ESMF_FILESTATUS_OLD The file must exist.

ESMF_FILESTATUS_REPLACE If the file exists, all of its contents will be deleted before writing. If the file does not exist, it will be created.

ESMF_FILESTATUS_UNKNOWN The value is treated as if it were `ESMF_FILESTATUS_OLD` if the corresponding file already exists. Otherwise, the value is treated as if it were `ESMF_FILESTATUS_NEW`.

55.23 ESMF_GEOMTYPE

DESCRIPTION:
Different types of geometries upon which an ESMF Field or ESMF Fieldbundle may be built.

The type of this flag is:

`type(ESMF_GeomType_Flag)`

The valid values are:

ESMF_GEOMTYPE_GRID An ESMF_Grid, a structured grid composed of one or more logically rectangular tiles.

ESMF_GEOMTYPE_MESH An ESMF_Mesh, an unstructured grid.

ESMF_GEOMTYPE_XGRID An ESMF_XGrid, an exchange grid.

ESMF_GEOMTYPE_LOCSTREAM An ESMF_LocStream, a disconnected series of points with associated key values.

55.24 ESMF_GRIDCONN

This flag is documented in section 32.2.1.

55.25 ESMF_GRIDITEM

This flag is documented in section 32.2.2.

55.26 ESMF_GRIDMATCH

This flag is documented in section 32.2.3.

55.27 ESMF_GRIDSTATUS

This flag is documented in section 32.2.4.

55.28 ESMF_HCONFIGMATCH

This flag is documented in section 49.2.1.

55.29 ESMF_INDEX

DESCRIPTION:
Indicates whether index is local (per DE) or global (per object).

The type of this flag is:

`type(ESMF_Index_Flag)`

The valid values are:

ESMF_INDEX_DELOCAL Indicates that DE-local index space starts at lower bound 1 for each DE.

ESMF_INDEX_GLOBAL Indicates that global indices are used. This means that DE-local index space starts at the global lower bound for each DE.

ESMF_INDEX_USER Indicates that the DE-local index bounds are explicitly set by the user.

55.30 ESMF_IOFMT

DESCRIPTION:
Indicates I/O format options that are currently supported.

The type of this flag is:

`type(ESMF_IOFmt_Flag)`

The valid values are:

ESMF_IOFMT_NETCDF NETCDF and PNETCDF (cdf1) format in NETCDF-3 "classic" format. Use of PNETCDF is prioritized if available.

ESMF_IOFMT_NETCDF_64BIT_OFFSET NETCDF and PNETCDF (cdf2) format. This format allows files greater than 4GiB in NETCDF-3 "classic" format. Use of PNETCDF is prioritized if available.

ESMF_IOFMT_NETCDF_64BIT_DATA NETCDF and PNETCDF (cdf5) format. This allows individual records greater than 4GiB in NETCDF-3 "classic" format. Use of PNETCDF is prioritized if available.

ESMF_IOFMT_NETCDF4P NETCDF-4 (HDF-5) format. If a NETCDF parallel library is available, writes will be in parallel. Writes will use one I/O PET per SSI (node) of the ESMF VM that calls the I/O operation. Otherwise writes will be serial.

ESMF_IOFMT_NETCDF4C NETCDF-4 (HDF-5) format with lossless compression from HDF-5 applied. This is only available as a serial option, even if a parallel NETCDF library is available.

55.31 ESMF_IO_NETCDF_PRESENT

DESCRIPTION:
Indicates whether netcdf feature support has been enabled within the current ESMF build.

The type of this flag is:

`logical`

The valid values are:

.true. Netcdf features are enabled.

.false. Netcdf features are not enabled.

55.32 ESMF_IO_PIO_PRESENT

DESCRIPTION:
Indicates whether PIO (parallel I/O) feature support has been enabled within the current ESMF build.

The type of this flag is:

`logical`

The valid values are:

.true. PIO features are enabled.

.false. PIO features are not enabled.

55.33 ESMF_IO_PNETCDF_PRESENT

DESCRIPTION:
Indicates whether parallel netcdf feature support has been enabled within the current ESMF build.

The type of this flag is:

`logical`

The valid values are:

.true. Parallel NETCDF features are enabled.

.false. Parallel NETCDF features are not enabled.

55.34 ESMF_ITEMORDER

DESCRIPTION:
Specifies the order of items in a list.

The type of this flag is:

`type(ESMF_ItemOrder_Flag)`

The valid values are:

ESMF_ITEMORDER_ABC The items are in alphabetical order, according to their names.

ESMF_ITEMORDER_ADDORDER The items are in the order in which they were added to the container.

55.35 ESMF_KIND

DESCRIPTION:
Named constants to be used as *kind-parameter* in Fortran variable declarations. For example:

```
integer(ESMF_KIND_I4)       :: integerVariable
integer(kind=ESMF_KIND_I4)  :: integerVariable
```

```
real(ESMF_KIND_R4)          :: realVariable
real(kind=ESMF_KIND_R4)     :: realVariable
```

The Fortran standard does not mandate what numeric values correspond to actual number of bytes allocated for the various kinds. The following constants are defined by ESMF to be correct across the supported Fortran compilers. Note that not all compilers support every kind listed below; in particular 1 and 2 byte integers can be problematic.

The type of these named constants is:

`integer`

The named constants are:

ESMF_KIND_I1 Kind-parameter for 1 byte integer.

ESMF_KIND_I2 Kind-parameter for 2 byte integer.

ESMF_KIND_I4 Kind-parameter for 4 byte integer.

ESMF_KIND_I8 Kind-parameter for 8 byte integer.

ESMF_KIND_R4 Kind-parameter for 4 byte real.

ESMF_KIND_R8 Kind-parameter for 8 byte real.

55.36 ESMF_LINETYPE

DESCRIPTION:
This argument allows the user to select the path of the line which connects two points on the surface of a sphere. This in turn controls the path along which distances are calculated and the shape of the edges that make up a cell.

The type of this flag is:

`type(ESMF_LineType_Flag)`

The valid values are:

ESMF_LINETYPE_CART Cartesian line. When this option is specified distances are calculated in a straight line through the 3D Cartesian space in which the sphere is embedded. Cells are approximated by 3D planes bounded by 3D Cartesian lines between their corner vertices. When calculating regrid weights, this line type is currently the default for non-conservative regrid methods (e.g. ESMF_REGRIDMETHOD_BILINEAR, ESMF_REGRIDMETHOD_PATCH, ESMF_REGRIDMETHOD_NEAREST_STOD, etc.).

ESMF_LINETYPE_GREAT_CIRCLE Great circle line. When this option is specified distances are calculated along a great circle path (the shortest distance between two points on a sphere surface). Cells are bounded by great circle paths between their corner vertices. When calculating regrid weights, this line type is currently the default for conservative regrid methods (e.g. ESMF_REGRIDMETHOD_CONSERVE, etc.).

55.37 ESMF_LOGERR

This flag is documented in section 50.2.1.

55.38 ESMF_LOGKIND

This flag is documented in section 50.2.2.

55.39 ESMF_LOGMSG

This flag is documented in section 50.2.3.

55.40 ESMF_MESHELEMTYPE

This flag is documented in section 34.2.1.

55.41 ESMF_MESHLOC

DESCRIPTION:
Used to indicate a specific part of a Mesh. This is commonly used to specify the part of the Mesh to create a Field on.

The type of this flag is:

`type(ESMF_MeshLoc)`

The valid values are:

ESMF_MESHLOC_NODE The nodes (also known as corners or vertices) of a Mesh.

ESMF_MESHLOC_ELEMENT The elements (also known as cells) of a Mesh.

55.42 ESMF_MESHOP

DESCRIPTION:
Specifies the spatial operation with two source Meshes, treating the Meshes as point sets.

The type of this flag is:

`type(ESMF_MeshOp_Flag)`

The valid values are:

ESMF_MESHOP_DIFFERENCE Calculate the difference of the two point sets from the source Meshes.

55.43 ESMF_MESHSTATUS

DESCRIPTION:
The ESMF Mesh class can exist in several states. The ESMF_MESHSTATUS flag is used to indicate which of these states a Mesh is currently in.

The type of this flag is:

`type(ESMF_MeshStatus_Flag)`

The valid values are:

ESMF_MESHSTATUS_UNINIT: The Mesh status is uninitialized. This might happen if the Mesh hasn't been created yet, or if the Mesh has been destroyed.

ESMF_MESHSTATUS_EMPTY: Status after a Mesh has been created with `ESMF_MeshEmptyCreate`. Only distribution information has been set in the Mesh. This object can be used in the `ESMF_MeshGet()` method to retrieve distgrids and the distgrid's presence.

ESMF_MESHSTATUS_STRUCTCREATED: Status after a Mesh has been through the first step of the three step creation process. The Mesh is now ready to have nodes added to it.

ESMF_MESHSTATUS_NODESADDED: Status after a Mesh has been through the second step of the three step creation process. The Mesh is now ready to be completed with elements.

ESMF_MESHSTATUS_COMPLETE: The Mesh has been completely created and can be used to create a Field. Further, if the internal Mesh memory hasn't been freed, then the Mesh should be usable in any Mesh functionality (e.g. regridding). The status of the internal Mesh memory can be checked using the `isMemFreed` argument to `ESMF_MeshGet()`.

55.44 ESMF_METHOD

DESCRIPTION:
Specify standard ESMF Component method.

The type of this flag is:

`type(ESMF_Method_Flag)`

The valid values are:

ESMF_METHOD_FINALIZE Finalize method.

ESMF_METHOD_INITIALIZE Initialize method.

ESMF_METHOD_READRESTART ReadRestart method.

ESMF_METHOD_RUN Run method.

ESMF_METHOD_WRITERESTART WriteRestart method.

55.45 ESMF_NORMTYPE

DESCRIPTION:
When doing conservative regridding (e.g. `ESMF_REGRIDMETHOD_CONSERVE`), this option allows the user to select the type of normalization used when producing the weights.

`type(ESMF_NormType_Flag)`

The valid values are:

ESMF_NORMTYPE_DSTAREA Destination area normalization. Here the weights are calculated by dividing the area of overlap of the source and destination cells by the area of the entire destination cell. In other words, the weight is the fraction of the entire destination cell which overlaps with the given source cell.

ESMF_NORMTYPE_FRACAREA Fraction area normalization. Here in addition to the weight calculation done for destination area normalization (`ESMF_NORMTYPE_DSTAREA`) the weights are also divided by the fraction that the destination cell overlaps with the entire source grid. In other words, the weight is the fraction of just the part of the destination cell that overlaps with the entire source mesh.

55.46 ESMF_PIN

This flag is documented in section 51.2.1.

55.47 ESMF_POLEKIND

This flag is documented in section 32.2.5.

55.48 ESMF_POLEMETHOD

DESCRIPTION:

When interpolating between two Grids which have been mapped to a sphere these can be used to specify the type of artificial pole to create on the source Grid during interpolation. Creating the pole allows destination points above the top row or below the bottom row of the source Grid to still be mapped.

The type of this flag is:

`type(ESMF_PoleMethod_Flag)`

The valid values are:

ESMF_POLEMETHOD_NONE No pole. Destination points which lie above the top or below the bottom row of the source Grid won't be mapped.

ESMF_POLEMETHOD_ALLAVG Construct an artificial pole placed in the center of the top (or bottom) row of nodes, but projected onto the sphere formed by the rest of the grid. The value at this pole is the average of all the source values surrounding the pole.

ESMF_POLEMETHOD_NPNTAVG Construct an artificial pole placed in the center of the top (or bottom) row of nodes, but projected onto the sphere formed by the rest of the grid. The value at this pole is the average of the N source nodes next to the pole and surrounding the destination point (i.e. the value may differ for each destination point). Here N is set by using the `regridPoleNPnts` parameter and ranges from 1 to the number of nodes around the pole. This option is useful for interpolating values which may be zeroed out by averaging around the entire pole (e.g. vector components).

ESMF_POLEMETHOD_TEETH No new pole point is constructed, instead the holes at the poles are filled by constructing triangles across the top and bottom row of the source Grid. This can be useful because no averaging occurs, however, because the top and bottom of the sphere are now flat, for a big enough mismatch between the size of the destination and source pole holes, some destination points may still not be able to be mapped to the source Grid.

55.49 ESMF_REDUCE

DESCRIPTION:
Indicates reduce operation.

The type of this flag is:

`type(ESMF_Reduce_Flag)`

The valid values are:

ESMF_REDUCE_SUM Use arithmetic sum to add all data elements.

ESMF_REDUCE_MIN Determine the minimum of all data elements.

ESMF_REDUCE_MAX Determine the maximum of all data elements.

55.50 ESMF_REGION

DESCRIPTION:
Specifies various regions in the data layout of an Array or Field object.

The type of this flag is:

`type(ESMF_Region_Flag)`

The valid values are:

ESMF_REGION_TOTAL Total allocated memory.

ESMF_REGION_SELECT Region of operation-specific elements.

ESMF_REGION_EMPTY The empty region contains no elements.

55.51 ESMF_REGRIDMETHOD

DESCRIPTION:
Specify which interpolation method to use during regridding. For a more detailed discussion of these methods, as well as ESMF regridding in general, see Section 25.2.

The type of this flag is:

`type(ESMF_RegridMethod_Flag)`

The valid values are:

ESMF_REGRIDMETHOD_BILINEAR Bilinear interpolation. Destination value is a linear combination of the source values in the cell which contains the destination point. The weights for the linear combination are based on the distance of destination point from each source value.

ESMF_REGRIDMETHOD_PATCH Higher-order patch recovery interpolation. Destination value is a weighted average of 2D polynomial patches constructed from cells surrounding the source cell which contains the destination point. This method typically results in better approximations to values and derivatives than bilinear. However, because of its larger stencil, it also results in a much larger interpolation matrix (and thus routeHandle) than the bilinear.

ESMF_REGRIDMETHOD_NEAREST_STOD In this version of nearest neighbor interpolation each destination point is mapped to the closest source point. A given source point may go to multiple destination points, but no destination point will receive input from more than one source point.

ESMF_REGRIDMETHOD_NEAREST_DTOS In this version of nearest neighbor interpolation each source point is mapped to the closest destination point. A given destination point may receive input from multiple source points, but no source point will go to more than one destination point.

ESMF_REGRIDMETHOD_CONSERVE First-order conservative interpolation. The main purpose of this method is to preserve the integral of the field between the source and destination. Will typically give a less accurate approximation to the individual field values than the bilinear or patch methods. The value of a destination cell is calculated as the weighted sum of the values of the source cells that it overlaps. The weights are determined by the amount the source cell overlaps the destination cell. Needs corner coordinate values to be provided in the Grid. Currently only works for Fields created on the Grid center stagger or the Mesh element location.

ESMF_REGRIDMETHOD_CONSERVE_2ND Second-order conservative interpolation. As with first-order, preserves the integral of the value between the source and destination. However, typically produces a smoother more accurate result than first-order. Also like first-order, the value of a destination cell is calculated as the weighted sum of the values of the source cells that it overlaps. However, second-order also includes additional terms to take into account the gradient of the field across the source cell. Needs corner coordinate values to be provided in the Grid. Currently only works for Fields created on the Grid center stagger or the Mesh element location.

55.52 ESMF_REGRIDSTATUS

DESCRIPTION:

These values can be output during regridding (e.g. from `ESMF_FieldRegridStore()` via the `dstStatusField` argument). They indicate the status of each destination location.

The type of this flag is:

`integer(ESMF_KIND_I4)`

The valid values for all regrid methods are:

ESMF_REGRIDSTATUS_DSTMASKED The destination location is masked, so no regridding has been peformed on it. This status has a numeric value of 0.

ESMF_REGRIDSTATUS_SRCMASKED The destination location is within a masked part of the source grid, so no regridding has been performed on it. This status has a numeric value of 1.

ESMF_REGRIDSTATUS_OUTSIDE The destination location is outside the source grid, so no regridding has been performed on it. This status has a numeric value of 2.

ESMF_REGRIDSTATUS_MAPPED The destination location is within the unmasked source grid, and so has been regridded (i.e. there is an entry for it within the factorIndexList or routeHandle). This status has a numeric value of 4.

ESMF_REGRIDSTATUS_EXMAPPED The destination location was not within the unmasked source grid, and so typically it wouldn't be regridded. However, extrapolation was used, and so it has been regridded (i.e. there is an entry for it within the factorIndexList or routeHandle). This status has a numeric value of 8.

In addition to the above, regridding using the conservative method can result in other values. The reason for this is that in that method one destination cell can overlap multiple source cells, so a single destination can have a combination of values. The following are the additional values that apply to the conservative method:

ESMF_REGRIDSTATUS_SMSK_OUT The destination cell overlaps a masked source cell, and extends outside the source grid. This status has a numeric value of 3.

ESMF_REGRIDSTATUS_SMSK_MP The destination cell overlaps a masked source cell, and an unmasked source cell. (Because it overlaps with the unmasked source grid, there will be an entry for the destination cell within the factorIndexList or routeHandle). This status has a numeric value of 5.

ESMF_REGRIDSTATUS_OUT_MP The destination cell overlaps an unmasked source cell, and extends outside the source grid. (Because it overlaps with the unmasked source grid, there will be an entry for the destination cell within the factorIndexList or routeHandle). This status has a numeric value of 6.

ESMF_REGRIDSTATUS_SMSK_OUT_MP The destination cell overlaps a masked source cell, an unmasked source cell, and extends outside the source grid. (Because it overlaps with the unmasked source grid, there will be an entry for the destination cell within the factorIndexList or routeHandle). This status has a numeric value of 7.

55.53 ESMF_ROUTESYNC

DESCRIPTION:

Switch between blocking and non-blocking execution of RouteHandle based communication calls. Every RouteHandle based communication method contains an optional argument `routesyncflag` that is of type `ESMF_RouteSync_Flag`.

The type of this flag is:

```
type(ESMF_RouteSync_Flag)
```

The valid values are:

ESMF_ROUTESYNC_BLOCKING Execute a precomputed communication pattern in blocking mode. This mode guarantees that when the method returns all PET-local data transfers, both in-bound and out-bound, have finished.

ESMF_ROUTESYNC_NBSTART Start executing a precomputed communication pattern in non-blocking mode. When a method returns from being called in this mode, it guarantees that all PET-local out-bound data has been transferred. It is now safe for the user to overwrite out-bound data elements. No guarantees are made for in-bound data elements at this stage. It is unsafe to access these elements until a call in `ESMF_ROUTESYNC_NBTESTFINISH` mode has been issued and has returned with `finishedflag` equal to .true., or a call in `ESMF_ROUTESYNC_NBWAITFINISH` mode has been issued and has returned.

ESMF_ROUTESYNC_NBTESTFINISH Test whether the transfer of data of a precomputed communication pattern, started with `ESMF_ROUTESYNC_NBSTART`, has completed. Finish up as much as possible and set the `finishedflag` to `.true.` if *all* data operations have completed, or `.false.` if there are still outstanding transfers. Only after a `finishedflag` equal to `.true.` has been returned is it safe to access any of the in-bound data elements.

ESMF_ROUTESYNC_NBWAITFINISH Wait (i.e. block) until the transfer of data of a precomputed communication pattern, started with `ESMF_ROUTESYNC_NBSTART`, has completed. Finish up *all* data operations and set the returned `finishedflag` to `.true.`. It is safe to access any of the in-bound data elements once the call has returned.

ESMF_ROUTESYNC_CANCEL Cancel outstanding transfers for a precomputed communication pattern.

55.54 ESMF_SERVICEREPLY

This flag is documented in section 51.2.2.

55.55 ESMF_STAGGERLOC

This flag is documented in section 32.2.6.

55.56 ESMF_STARTREGION

DESCRIPTION:
Specifies the start of the effective halo region of an Array or Field object.

The type of this flag is:

`type(ESMF_StartRegion_Flag)`

The valid values are:

ESMF_STARTREGION_EXCLUSIVE Region of elements that are exclusively owned by the local DE.

ESMF_STARTREGION_COMPUTATIONAL User defined region, greater or equal to the exclusive region.

55.57 ESMF_STATEINTENT

This flag is documented in section 21.2.1.

55.58 ESMF_STATEITEM

This flag is documented in section 21.2.2.

55.59 ESMF_SYNC

DESCRIPTION:
Indicates method blocking behavior and PET synchronization for VM communication methods, as well as for standard Component methods, such as Initialize(), Run() and Finalize().

For VM communication calls the `ESMF_SYNC_BLOCKING` and `ESMF_SYNC_NONBLOCKING` modes provide behavior that is practically identical to the blocking and non-blocking communication calls familiar from MPI.

The details of how the blocking mode setting affects Component methods are more complex. This is a consequence of the fact that ESMF Components can be executed in threaded or non-threaded mode. However, in the default, non-threaded case, where an ESMF application runs as a pure MPI or mpiuni program, most of the complexity is removed.

See the **VM** item in 6.6 for an explanation of the PET and VAS concepts used in the following descriptions.

The type of this flag is:

`type(ESMF_Sync_Flag)`

The valid values are:

ESMF_SYNC_BLOCKING *Communication calls:* The called method will block until all (PET-)local operations are complete. After the return of a blocking communication method it is safe to modify or use all participating local data.

Component calls: The called method will block until all PETs of the VM have completed the operation.

For a non-threaded, pure MPI component the behavior is identical to calling a barrier before returning from the method. Generally this kind of rigid synchronization is not the desirable mode of operation for an MPI application, but may be useful for application debugging. In the opposite case, where all PETs of the component are running as threads in shared memory, i.e. in a single VAS, strict synchronization of all PETs is required to prevent race conditions.

ESMF_SYNC_VASBLOCKING *Communication calls:* Not available for communication calls.

Component calls: The called method will block each PET until all operations in the PET-local VAS have completed.

This mode is a combination of `ESMF_SYNC_BLOCKING` and `ESMF_SYNC_NONBLOCKING` modes. It provides a default setting that leads to the typically desirable behavior for pure MPI components as well as those that share address spaces between PETs.

For a non-threaded, pure MPI component each PET returns independent of the other PETs. This is generally the expected behavior in the pure MPI case where calling into a component method is practically identical to a subroutine call without extra synchronization between the processes.

In the case where some PETs of the component are running as threads in shared memory `ESMF_SYNC_VASBLOCKING` becomes identical to `ESMF_SYNC_BLOCKING` within thread groups, to prevent race conditions, while there is no synchronization between the thread groups.

ESMF_SYNC_NONBLOCKING *Communication calls:* The called method will not block but returns immediately after initiating the requested operation. It is unsafe to modify or use participating local data before all local operations have completed. Use the `ESMF_VMCommWait()` or `ESMF_VMCommQueueWait()` method to block the local PET until local data access is safe again.

Component calls: The behavior of this mode is fundamentally different for threaded and non-threaded components, independent on whether the components use shared memory or not. The `ESMF_SYNC_NONBLOCKING` mode is the most complex mode for calling component methods and should only be used if the extra control, described below, is absolutely necessary.

For non-threaded components (the ESMF default) calling a component method with `ESMF_SYNC_NONBLOCKING` is identical to calling it with `ESMF_SYNC_VASBLOCKING`. However, different than for `ESMF_SYNC_VASBLOCKING`, a call to `ESMF_GridCompWait()` or `ESMF_CplCompWait()` is required in order to deallocate memory internally allocated for the `ESMF_SYNC_NONBLOCKING` mode.

For threaded components the calling PETs of the parent component will not be blocked and return immediately after initiating the requested child component method. In this scenario parent and child components will run concurrently in identical VASs. This is the most complex mode of operation. It is unsafe to modify or use VAS local data that may be accessed by concurrently running components until the child component method has completed. Use the appropriate `ESMF_GridCompWait()` or `ESMF_CplCompWait()` method to block the local parent PET until the child component method has completed in the local VAS.

55.60 ESMF_TERMORDER

DESCRIPTION:
Specifies the order of source terms in a destination sum, e.g. during sparse matrix multiplication.

The type of this flag is:

`type(ESMF_TermOrder_Flag)`

The valid values are:

ESMF_TERMORDER_SRCSEQ The source terms are in strict ascending order according to their source sequence index.

ESMF_TERMORDER_SRCPET The source terms are first ordered according to their distribution across the source side PETs: for each destination PET the source PET order starts with the localPet and decrements from there, modulo petCount, until all petCount PETs are accounted for. The term order within each source PET is given by the source term sequence index.

ESMF_TERMORDER_FREE There is no prescribed term order. The source terms may be summed in any order that optimizes performance.

55.61 ESMF_TYPEKIND

DESCRIPTION:
Named constants used to indicate type and kind combinations supported by the overloaded ESMF interfaces. The corresponding Fortran kind-parameter constants are described in section 55.35.

The type of these named constants is:

`type(ESMF_TypeKind_Flag)`

The named constants numerical types are:

ESMF_TYPEKIND_I1 Indicates 1 byte integer.
(Only available if ESMF was built with `ESMF_NO_INTEGER_1_BYTE = FALSE`. This is *not* the default.)

ESMF_TYPEKIND_I2 Indicates 2 byte integer.
(Only available if ESMF was built with `ESMF_NO_INTEGER_2_BYTE = FALSE`. This is *not* the default.)

ESMF_TYPEKIND_I4 Indicates 4 byte integer.

ESMF_TYPEKIND_I8 Indicates 8 byte integer.

ESMF_TYPEKIND_R4 Indicates 4 byte real.

ESMF_TYPEKIND_R8 Indicates 8 byte real.

The named constants non-numerical types are:

ESMF_TYPEKIND_LOGICAL Indicates a logical value.

ESMF_TYPEKIND_CHARACTER Indicates a character string.

55.62 ESMF_UNMAPPEDACTION

DESCRIPTION:
Indicates what action to take with respect to unmapped destination points and the entries of the sparse matrix that correspond to these points.

The type of this flag is:

`type(ESMF_UnmappedAction_Flag)`

The valid values are:

ESMF_UNMAPPEDACTION_ERROR An error is issued when there exist destination points in a regridding operation that are not mapped by corresponding source points.

ESMF_UNMAPPEDACTION_IGNORE Destination points which do not have corresponding source points are ignored and zeros are used for the entries of the sparse matrix that is generated.

55.63 ESMF_VERSION

DESCRIPTION:
The following named constants define the precise version of ESMF in use.

ESMF_VERSION_BETASNAPSHOT Constant of type `logical` indicating beta snapshot phase (`.true.` for any version during the pre-release development phase, `.false.` for any released version of the software).

ESMF_VERSION_MAJOR Constant of type `integer` indicating the major version number (e.g. 5 for v5.2.0r).

ESMF_VERSION_MINOR Constant of type `integer` indicating the minor version number (e.g. 2 for v5.2.0r).

ESMF_VERSION_PATCHLEVEL Constant of type `integer` indicating the patch level of a specific revision (e.g. 0 for v5.2.0r, or 1 for v5.2.0rp1).

ESMF_VERSION_PUBLIC Constant of type `logical` indicating public vs. internal release status (e.g. `.true.` for v5.2.0r, or `.false.` for v5.2.0).

ESMF_VERSION_REVISION Constant of type `integer` indicating the revision number (e.g. 0 for v5.2.0r).

ESMF_VERSION_STRING Constant of type `character` holding the exact release version string (e.g. "5.2.0r").

55.64 ESMF_VMEPOCH

This flag is documented in section 52.2.1.

55.65 ESMF_XGRIDSIDE

This flag is documented in section 35.2.1.

56 Appendix B: A Brief Introduction to UML

The schematic below shows the Unified Modeling Language (UML) notation for the class diagrams presented in this *Reference Manual*. For more on UML, see references such as *The Unified Modeling Language Reference Manual*, Rumbaugh et al, [29].

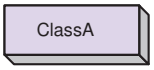

Public class. This is a class whose methods can be called by the user. In Fortran a public class is usually associated with a derived type and a corresponding module that contains class methods and flags.

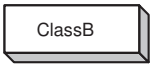

Private class. This type of class does not have methods that should be called by the user. Like a public class it is usually associated with a derived type and a corresponding module.

A line indicates some sort of association among classes.

A hollow diamond at one end of a line drawn between classes represents an association called aggregation. Aggregation is a part-whole relationship that can be read as "the class at the end of the line without the diamond is part of the class at the end of the line with the diamond." The class that is the "part" can be created and destroyed separately, and it is usually implemented as a reference contained with the structure of the class that is the "whole."

A filled diamond at one end of a line drawn between classes represents an association called composition. Composition is a part-whole relationship that is similar to aggregation, but stronger. It implies that that class that is the "part" is created and destroyed by the class that is the "whole." It is often implemented as a structure within part of the contiguous memory of a larger structure.

Multiplicity indicators at association line ends show how many classes on the one end are associated with how many classes on the other end.

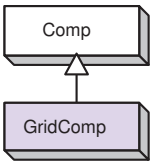

The triangle indicates an inheritance relationship. Inheritance means that a child class shares a set of characteristics (such as the same attributes or methods) with a parent class. The child can specialize and extend the behavior of the parent. This diagram shows a GridComp class that inherits from a more general Comp class.

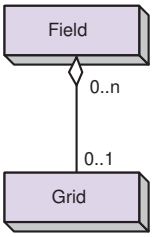

This simple diagram shows that a public class called Field is associated with another public class, called Grid. The aggregation relationship indicated by the unfilled diamond means that a Field contains a Grid, but that a Grid can be created and destroyed outside of a Field. The diagram multiplicities show that a Field can be associated with no Grid or with one Grid, but that a single Grid can be associated with any number of Fields.

57 Appendix C: ESMF Error Return Codes

The tables below show the possible error return codes for Fortran and C methods.

```
=====================================
Fortran Symmetric Return Codes 1-500
=====================================

 ESMF_SUCCESS                0
 ESMF_RC_OBJ_BAD             1
 ESMF_RC_OBJ_INIT            2
 ESMF_RC_OBJ_CREATE          3
 ESMF_RC_OBJ_COR             4
 ESMF_RC_OBJ_WRONG           5
 ESMF_RC_ARG_BAD             6
 ESMF_RC_ARG_RANK            7
 ESMF_RC_ARG_SIZE            8
 ESMF_RC_ARG_VALUE           9
 ESMF_RC_ARG_DUP            10
 ESMF_RC_ARG_SAMETYPE       11
 ESMF_RC_ARG_SAMECOMM       12
 ESMF_RC_ARG_INCOMP         13
 ESMF_RC_ARG_CORRUPT        14
 ESMF_RC_ARG_WRONG          15
 ESMF_RC_ARG_OUTOFRANGE     16
 ESMF_RC_ARG_OPT            17
 ESMF_RC_NOT_IMPL           18
 ESMF_RC_FILE_OPEN          19
 ESMF_RC_FILE_CREATE        20
 ESMF_RC_FILE_READ          21
 ESMF_RC_FILE_WRITE         22
 ESMF_RC_FILE_UNEXPECTED    23
 ESMF_RC_FILE_CLOSE         24
 ESMF_RC_FILE_ACTIVE        25
 ESMF_RC_PTR_NULL           26
 ESMF_RC_PTR_BAD            27
 ESMF_RC_PTR_NOTALLOC       28
 ESMF_RC_PTR_ISALLOC        29
 ESMF_RC_MEM                30
 ESMF_RC_MEM_ALLOCATE       31
 ESMF_RC_MEM_DEALLOCATE     32
 ESMF_RC_MEMC               33
 ESMF_RC_DUP_NAME           34
 ESMF_RC_LONG_NAME          35
 ESMF_RC_LONG_STR           36
 ESMF_RC_COPY_FAIL          37
 ESMF_RC_DIV_ZERO           38
 ESMF_RC_CANNOT_GET         39
 ESMF_RC_CANNOT_SET         40
 ESMF_RC_NOT_FOUND          41
 ESMF_RC_NOT_VALID          42
 ESMF_RC_INTNRL_LIST        43
 ESMF_RC_INTNRL_INCONS      44
 ESMF_RC_INTNRL_BAD         45
```

```
 ESMF_RC_SYS                46
 ESMF_RC_BUSY               47
 ESMF_RC_LIB                48
 ESMF_RC_LIB_NOT_PRESENT    49
 ESMF_RC_ATTR_UNUSED        50
 ESMF_RC_OBJ_NOT_CREATED    51
 ESMF_RC_OBJ_DELETED        52
 ESMF_RC_NOT_SET            53
 ESMF_RC_VAL_WRONG          54
 ESMF_RC_VAL_ERRBOUND       55
 ESMF_RC_VAL_OUTOFRANGE     56
 ESMF_RC_ATTR_NOTSET        57
 ESMF_RC_ATTR_WRONGTYPE     58
 ESMF_RC_ATTR_ITEMSOFF      59
 ESMF_RC_ATTR_LINK          60
 ESMF_RC_BUFFER_SHORT       61
 ESMF_RC_TIMEOUT            62
 ESMF_RC_FILE_EXISTS        63
 ESMF_RC_FILE_NOTDIR        64
 ESMF_RC_MOAB_ERROR         65
 ESMF_RC_NOOP               66
 ESMF_RC_NETCDF_ERROR       67

68-499 reserved for future Fortran symmetric return code definitions

=====================================
C/C++ Symmetric Return Codes 501-999
=====================================

 ESMC_RC_OBJ_BAD           501
 ESMC_RC_OBJ_INIT          502
 ESMC_RC_OBJ_CREATE        503
 ESMC_RC_OBJ_COR           504
 ESMC_RC_OBJ_WRONG         505
 ESMC_RC_ARG_BAD           506
 ESMC_RC_ARG_RANK          507
 ESMC_RC_ARG_SIZE          508
 ESMC_RC_ARG_VALUE         509
 ESMC_RC_ARG_DUP           510
 ESMC_RC_ARG_SAMETYPE      511
 ESMC_RC_ARG_SAMECOMM      512
 ESMC_RC_ARG_INCOMP        513
 ESMC_RC_ARG_CORRUPT       514
 ESMC_RC_ARG_WRONG         515
 ESMC_RC_ARG_OUTOFRANGE    516
 ESMC_RC_ARG_OPT           517
 ESMC_RC_NOT_IMPL          518
 ESMC_RC_FILE_OPEN         519
 ESMC_RC_FILE_CREATE       520
 ESMC_RC_FILE_READ         521
 ESMC_RC_FILE_WRITE        522
 ESMC_RC_FILE_UNEXPECTED   523
 ESMC_RC_FILE_CLOSE        524
 ESMC_RC_FILE_ACTIVE       525
 ESMC_RC_PTR_NULL          526
```

```
 ESMC_RC_PTR_BAD          527
 ESMC_RC_PTR_NOTALLOC     528
 ESMC_RC_PTR_ISALLOC      529
 ESMC_RC_MEM              530
 ESMC_RC_MEM_ALLOCATE     531
 ESMC_RC_MEM_DEALLOCATE   532
 ESMC_RC_MEMC             533
 ESMC_RC_DUP_NAME         534
 ESMC_RC_LONG_NAME        535
 ESMC_RC_LONG_STR         536
 ESMC_RC_COPY_FAIL        537
 ESMC_RC_DIV_ZERO         538
 ESMC_RC_CANNOT_GET       539
 ESMC_RC_CANNOT_SET       540
 ESMC_RC_NOT_FOUND        541
 ESMC_RC_NOT_VALID        542
 ESMC_RC_INTNRL_LIST      543
 ESMC_RC_INTNRL_INCONS    544
 ESMC_RC_INTNRL_BAD       545
 ESMC_RC_SYS              546
 ESMC_RC_BUSY             547
 ESMC_RC_LIB              548
 ESMC_RC_LIB_NOT_PRESENT  549
 ESMC_RC_ATTR_UNUSED      550
 ESMC_RC_OBJ_NOT_CREATED  551
 ESMC_RC_OBJ_DELETED      552
 ESMC_RC_NOT_SET          553
 ESMC_RC_VAL_WRONG        554
 ESMC_RC_VAL_ERRBOUND     555
 ESMC_RC_VAL_OUTOFRANGE   556
 ESMC_RC_ATTR_NOTSET      557
 ESMC_RC_ATTR_WRONGTYPE   558
 ESMC_RC_ATTR_ITEMSOFF    559
 ESMC_RC_ATTR_LINK        560
 ESMC_RC_BUFFER_SHORT     561
 ESMC_RC_TIMEOUT          562
 ESMC_RC_FILE_EXISTS      563
 ESMC_RC_FILE_NOTDIR      564
 ESMC_RC_MOAB_ERROR       565
 ESMC_RC_NOOP             566
 ESMC_RC_NETCDF_ERROR     567

568-999 reserved for future C/C++ symmetric return code definitions

=====================================
C/C++ Non-symmetric Return Codes 1000
=====================================

 ESMC_RC_OPTARG_BAD      1000
```

58 Appendix D: Attribute Class Legacy API

Documentation for the legacy `ESMF_Attribute` Class. It is recommended that users migrate to the `ESMF_Info` class (see section 41).
Notice that a few aspects of the legacy Attribute API have been modified compared to its original implementation. These changes were necessary as a consequence of the changed backend to `ESMF_Info`:

- The `ESMF_AttributeSet()` method now supports setting attributes that were not previously added via `ESMF_AttributeAdd()`. In other words, the `ESMF_AttributeAdd()` method has become optional.
- There are overloads of the `ESMF_AttributeSet()` and `ESMF_AttributeGet()` with optional `convention` and `purpose` arguments. Both arguments must either be present or absent. Any other combination is handled as an error condition. For the case that both `convention` and `purpose` arguments are absent, and no Attribute Package is specified, the default JSON key prefix is "/ESMF/General".

58.1 Constants

58.1.1 ESMF_ATTCOPY

DEPRECATED CLASS!
The entire ESMF_Attribute class has been deprecated and will be removed in a future ESMF release. This includes all of the class derived types, named constants, and methods. Please use the replacement class `ESMF_Info`, section `41` instead!

DESCRIPTION:
Indicates which type of copy behavior is used when copying ESMF Attribute objects.

The type of this flag is:

`type(ESMF_AttCopy_Flag)`

The valid values are:

ESMF_ATTCOPY_REFERENCE The destination Attribute hierarchy becomes a reference copy of the Attribute hierarchy of the source object. Any further changes to one will also be reflected in the other.

ESMF_ATTCOPY_VALUE All of the Attributes and Attribute packages of the source object will be copied by value to the destination object. None of the Attribute links to the Attribute hierarchies of other objects are copied to the destination object.

58.1.2 ESMF_ATTGETCOUNT

DEPRECATED CLASS!
The entire ESMF_Attribute class has been deprecated and will be removed in a future ESMF release. This includes all of the class derived types, named constants, and methods. Please use the replacement class `ESMF_Info`, section `41` instead!

DESCRIPTION:
Indicates which type of Attribute object count to return.

The type of this flag is:

`type(ESMF_AttGetCountFlag)`

The valid values are:

ESMF_ATTGETCOUNT_ATTRIBUTE This option will allow the routine to return the number of single Attributes.

ESMF_ATTGETCOUNT_ATTPACK This option will allow the routine to return the number of Attribute packages.

ESMF_ATTGETCOUNT_TOTAL This option will allow the routine to return the total number of Attributes.

58.1.3 ESMF_ATTWRITE

DEPRECATED CLASS!
The entire ESMF_Attribute class has been deprecated and will be removed in a future ESMF release. This includes all of the class derived types, named constants, and methods. Please use the replacement class `ESMF_Info`, section `41` instead!

DESCRIPTION:
Indicates which file format to use in the write operation.

The type of this flag is:

`type(ESMF_AttWriteFlag)`

The valid values are:

ESMF_ATTWRITE_JSON This option will allow the routine to write in JSON format.

58.2 Class API

58.2.1 ESMF_AttributeAdd - Add an ESMF Attribute package

INTERFACE:

```
! Private name; call using ESMF_AttributeAdd()
subroutine ESMF_AttAddPackInfo(info, convention, purpose, attrList, &
  nestConvention, nestPurpose, attpack, rc)
```

ARGUMENTS:

```
type(<ESMF_Info>),   intent(inout)           :: info
character (len = *), intent(in)              :: convention
character (len = *), intent(in)              :: purpose
character (len = *), intent(in),    optional :: attrList(:)
character (len = *), intent(in)     optional :: nestConvention
character (len = *), intent(in)     optional :: nestPurpose
type(ESMF_AttPack),  intent(out),   optional :: attpack
integer,             intent(inout), optional :: rc
```

STATUS: **DEPRECATED CLASS!**
The entire ESMF_Attribute class has been deprecated and will be removed in a future ESMF release. This includes all of the class derived types, named constants, and methods. Please use the replacement class `ESMF_Info`, section `41` instead!

DESCRIPTION:

Add an ESMF Attribute package.

The arguments are:

info An `ESMF_Info` object.

convention The convention of the new Attribute package.

purpose The purpose of the new Attribute package.

[attrList] The list of Attribute names to add to the Attribute package.

[nestConvention] The convention(s) of the standard Attribute package(s) around which to nest the new Attribute package.

[nestPurpose] The purpose(s) of the standard Attribute package(s) around which to nest the new Attribute package.

[attpack] An optional handle to the Attribute package that is to be created.

[rc] Return code; equals `ESMF_SUCCESS` if there are no errors.

58.2.2 ESMF_AttributeAdd - Add a nested ESMF Attribute package

INTERFACE:

```
! Private name; call using ESMF_AttributeAdd()
subroutine ESMF_AttAddPackStd(target, convention, purpose, attrList, &
  nestConvention, nestPurpose, attpack, rc)
```

ARGUMENTS:

```
type(<object>),      intent(inout)           :: target
character (len = *), intent(in)              :: convention
character (len = *), intent(in)              :: purpose
character (len = *), intent(in),    optional :: attrList(:)
character (len = *), intent(in)     optional :: nestConvention
character (len = *), intent(in)     optional :: nestPurpose
type(ESMF_AttPack),  intent(out),   optional :: attpack
integer,             intent(inout), optional :: rc
```

STATUS: **DEPRECATED CLASS!**
The entire ESMF_Attribute class has been deprecated and will be removed in a future ESMF release. This includes all of the class derived types, named constants, and methods. Please use the replacement class `ESMF_Info`, section

41 instead!

DESCRIPTION:

Add an ESMF Attribute package containing a nested Attribute package.

Supported values for <object> are:

ESMF_Array

ESMF_ArrayBundle

ESMF_CplComp

ESMF_GridComp

ESMF_SciComp

ESMF_DistGrid

ESMF_Field

ESMF_FieldBundle

ESMF_Grid

ESMF_State

ESMF_LocStream

ESMF_Mesh

The arguments are:

target An ESMF object.

convention The convention of the new Attribute package.

purpose The purpose of the new Attribute package.

[attrList] The list of Attribute names to add to the Attribute package.

[nestConvention] The convention(s) of the standard Attribute package(s) around which to nest the new Attribute package.

[nestPurpose] The purpose(s) of the standard Attribute package(s) around which to nest the new Attribute package.

[attpack] An optional handle to the Attribute package that is to be created.

[rc] Return code; equals ESMF_SUCCESS if there are no errors.

58.2.3 ESMF_AttributeCopy - Copy an Attribute hierarchy

INTERFACE:

```
! Private name; call using ESMF_AttributeCopy()
subroutine ESMF_AttributeCopy(src, dst, attcopy, rc)
```

ARGUMENTS:

```
      type(<object>),          intent(in)            :: src
      type(<object>),          intent(inout)         :: dst
 -- The following arguments require argument keyword syntax (e.g. rc=rc). --
      type(ESMF_AttCopy_Flag), intent(in),  optional :: attcopy
      integer,                 intent(out), optional :: rc
```

STATUS: **DEPRECATED CLASS!**
The entire ESMF_Attribute class has been deprecated and will be removed in a future ESMF release. This includes all of the class derived types, named constants, and methods. Please use the replacement class `ESMF_Info`, section `41` instead!

DESCRIPTION:

Copy an Attribute hierarchy from `src` to `dst`.

Supported values for <object> are:

`ESMF_Array`

`ESMF_ArrayBundle`

`ESMF_CplComp`

`ESMF_GridComp`

`ESMF_SciComp`

`ESMF_DistGrid`

`ESMF_Field`

`ESMF_FieldBundle`

`ESMF_Grid`

`ESMF_State`

`ESMF_LocStream`

`ESMF_Mesh`

NOTE: Copies between different ESMF object types are not possible.

The arguments are:

src An `Attribute`-bearing ESMF object.

dst An `Attribute`-bearing ESMF object.

[attcopy] A flag to determine if the copy is by value (the default) or reference. This flag is documented in section 58.1.1.

[rc] Return code; equals `ESMF_SUCCESS` if there are no errors.

58.2.4 ESMF_AttributeGet - Get an Attribute from an ESMF_AttPack

INTERFACE:

```
      subroutine ESMF_AttributeGet(target, name, attpack, <value> &
        <defaultvalue>, attnestflag, isPresent, rc)
```

ARGUMENTS:

```
      type(<object>),         intent(in)              :: target
      character (len = *),    intent(in)              :: name
      type(ESMF_AttPack),     intent(inout)           :: attpack
      <value>, see below for supported values
-- The following arguments require argument keyword syntax (e.g. rc=rc). --
      <defaultvalue>, see below for supported values
      type(ESMF_AttNest_Flag),intent(in),  optional   :: attnestflag
      logical,                intent(out), optional   :: isPresent
      integer,                intent(inout), optional :: rc
```

STATUS: **DEPRECATED CLASS!**
The entire ESMF_Attribute class has been deprecated and will be removed in a future ESMF release. This includes all of the class derived types, named constants, and methods. Please use the replacement class `ESMF_Info`, section `41` instead!

DESCRIPTION:

Return an Attribute `value` from the `target`, or from an Attribute package on the `target`, specified by `attpack`. A `defaultvalue` argument may be given if a return code is not desired when the Attribute is not found.

Supported values for <object> are:

`ESMF_Array`

`ESMF_ArrayBundle`

`ESMF_CplComp`

`ESMF_GridComp`

`ESMF_SciComp`

`ESMF_DistGrid`

`ESMF_Field`

```
ESMF_FieldBundle
ESMF_Grid
ESMF_State
ESMF_LocStream
ESMF_Mesh
```

Supported types for <value> and <defaultvalue> are:

```
integer(ESMF_KIND_I4), intent(out)
integer(ESMF_KIND_I8), intent(out)
real (ESMF_KIND_R4), intent(out)
real (ESMF_KIND_R8), intent(out)
logical, intent(out)
character (len = *), intent(out)
```

The arguments are:

target An `ESMF` object.

name The name of the Attribute to retrieve.

attpack A handle to the Attribute package.

<value> The value of the named Attribute.

[<defaultvalue>] The default value of the named Attribute.

[attnestflag] A flag to determine whether to descend the Attribute hierarchy when looking for this Attribute, the default is `ESMF_ATTNEST_ON`. This flag is documented in section 55.5.

[isPresent] A logical flag to tell if this Attribute is present or not.

[rc] Return code; equals `ESMF_SUCCESS` if there are no errors.

58.2.5 ESMF_AttributeGet - Get an Attribute from an ESMF_AttPack

INTERFACE:

```
subroutine ESMF_AttributeGet(target, name, attpack, <valueList>, &
  <defaultvalueList>, attnestflag, itemCount, &
  isPresent, rc)
```

ARGUMENTS:

```
      type(<object>),         intent(in)              :: target
      character (len = *),    intent(in)              :: name
      type(ESMF_AttPack),     intent(inout)           :: attpack
      <valueList>, see below for supported values
-- The following arguments require argument keyword syntax (e.g. rc=rc). --
      <defaultvalueList>, see below for supported values
      type(ESMF_AttNest_Flag),intent(in),  optional   :: attnestflag
      integer,                intent(out), optional   :: itemCount
      logical,                intent(out), optional   :: isPresent
      integer,                intent(inout), optional :: rc
```

STATUS: **DEPRECATED CLASS!**
The entire ESMF_Attribute class has been deprecated and will be removed in a future ESMF release. This includes all of the class derived types, named constants, and methods. Please use the replacement class `ESMF_Info`, section `41` instead!

DESCRIPTION:

Return an Attribute `valueList` from the `target`, or from an Attribute package on the `target`, specified by `attpack`. A `defaultvalueList` list argument may be given if a return code is not desired when the Attribute is not found.

Supported values for <object> are:

```
ESMF_Array

ESMF_ArrayBundle

ESMF_CplComp

ESMF_GridComp

ESMF_SciComp

ESMF_DistGrid

ESMF_Field

ESMF_FieldBundle

ESMF_Grid

ESMF_State

ESMF_LocStream

ESMF_Mesh
```

Supported types for <valueList> and <defaultvalueList> are:

```
integer(ESMF_KIND_I4), intent(out), dimension(:)

integer(ESMF_KIND_I8), intent(out), dimension(:)

real(ESMF_KIND_R4), intent(out), dimension(:)

real(ESMF_KIND_R8), intent(out), dimension(:)
```

```
logical, intent(out), dimension(:)
character(len=*), intent(out), dimension(:)
```

The arguments are:

target An `ESMF` object.

name The name of the Attribute to retrieve.

attpack A handle to the Attribute package.

<valueList> The valueList of the named Attribute.

[<defaultvalueList>] The default value list of the named Attribute.

[attnestflag] A flag to determine whether to descend the Attribute hierarchy when looking for this Attribute, the default is `ESMF_ATTNEST_ON`. This flag is documented in section 55.5.

[itemCount] The number of items in a multi-valued Attribute.

[isPresent] A logical flag to tell if this Attribute is present or not.

[rc] Return code; equals `ESMF_SUCCESS` if there are no errors.

58.2.6 ESMF_AttributeGet - Get an Attribute

INTERFACE:

```
subroutine ESMF_AttributeGet(target, name, <value>, <defaultvalue>, &
  convention, purpose, attnestflag, isPresent, rc)
```

ARGUMENTS:

```
type(<object>),         intent(in)              :: target
character (len = *),    intent(in)              :: name
<value>, see below for supported values
<defaultvalue>, see below for supported values
character (len = *),    intent(in),    optional :: convention
character (len = *),    intent(in),    optional :: purpose
type(ESMF_AttNest_Flag),intent(in),    optional :: attnestflag
logical,                intent(out),   optional :: isPresent
integer,                intent(inout), optional :: rc
```

STATUS: The following parameters were removed in ESMF version 8.1.0:

- `attPackInstanceName`

STATUS: **DEPRECATED CLASS!**
The entire ESMF_Attribute class has been deprecated and will be removed in a future ESMF release. This includes all of the class derived types, named constants, and methods. Please use the replacement class `ESMF_Info`, section `41` instead!

DESCRIPTION:

Return an Attribute `value` from the `target`, or from an Attribute package on the `target`, specified by `convention` and `purpose`. A `defaultvalue` argument may be given if a return code is not desired when the Attribute is not found.

Supported values for <object> are:

```
ESMF_Array
ESMF_ArrayBundle
ESMF_CplComp
ESMF_GridComp
ESMF_SciComp
ESMF_DistGrid
ESMF_Field
ESMF_FieldBundle
ESMF_Grid
ESMF_State
ESMF_LocStream
ESMF_Mesh
```

Supported types for <value> and <defaultvalue> are:

```
integer(ESMF_KIND_I4), intent(out)
integer(ESMF_KIND_I8), intent(out)
real (ESMF_KIND_R4), intent(out)
real (ESMF_KIND_R8), intent(out)
logical, intent(out)
character (len = *), intent(out)
```

The arguments are:

target An `ESMF` object.

name The name of the Attribute to retrieve.

<value> The value of the named Attribute.

[<defaultvalue>] The default value of the named Attribute.

[convention] The convention of the Attribute package.

[purpose] The purpose of the Attribute package.

[attnestflag] A flag to determine whether to descend the Attribute hierarchy when looking for this Attribute, the default is `ESMF_ATTNEST_ON`. This flag is documented in section 55.5.

[isPresent] A logical flag to tell if this Attribute is present or not.

[rc] Return code; equals `ESMF_SUCCESS` if there are no errors.

58.2.7 ESMF_AttributeGet - Get an Attribute

INTERFACE:

```
subroutine ESMF_AttributeGet(target, name, <valueList>, <defaultvalueList>, &
  convention, purpose, attnestflag, itemCount, isPresent, rc)
```

ARGUMENTS:

```
type(<object>),          intent(in)               :: target
character (len = *),     intent(in)               :: name
<valueList>, see below for supported values
<defaultvalueList>, see below for supported values
character (len = *),     intent(in),    optional :: convention
character (len = *),     intent(in),    optional :: purpose
type(ESMF_AttNest_Flag),intent(in),    optional :: attnestflag
integer,                 intent(out),   optional :: itemCount
logical,                 intent(out),   optional :: isPresent
integer,                 intent(inout), optional :: rc
```

STATUS: The following parameters were removed in ESMF version 8.1.0:

- `attPackInstanceName`

STATUS: **DEPRECATED CLASS!**
The entire ESMF_Attribute class has been deprecated and will be removed in a future ESMF release. This includes all of the class derived types, named constants, and methods. Please use the replacement class `ESMF_Info`, section `41` instead!

DESCRIPTION:

Return an Attribute `valueList` from the `target`, or from an Attribute package on the `target`, specified by `convention` and `purpose`. A `defaultvalueList` list argument may be given if a return code is not desired when the Attribute is not found.

Supported values for <object> are:

```
ESMF_Array
ESMF_ArrayBundle
ESMF_CplComp
ESMF_GridComp
ESMF_SciComp
ESMF_DistGrid
ESMF_Field
ESMF_FieldBundle
ESMF_Grid
ESMF_State
ESMF_LocStream
ESMF_Mesh
```

Supported types for <valueList> and <defaultvalueList> are:

```
integer(ESMF_KIND_I4), intent(out), dimension(:)
integer(ESMF_KIND_I8), intent(out), dimension(:)
real(ESMF_KIND_R4), intent(out), dimension(:)
real(ESMF_KIND_R8), intent(out), dimension(:)
logical, intent(out), dimension(:)
character(len=*), intent(out), dimension(:)
```

The arguments are:

target An `ESMF` object.

name The name of the Attribute to retrieve.

<valueList> The valueList of the named Attribute.

[<defaultvalueList>] The default value list of the named Attribute.

[convention] The convention of the Attribute package.

[purpose] The purpose of the Attribute package.

[attnestflag] A flag to determine whether to descend the Attribute hierarchy when looking for this Attribute, the default is `ESMF_ATTNEST_ON`. This flag is documented in section 55.5.

[itemCount] The number of items in a multi-valued Attribute.

[isPresent] A logical flag to tell if this Attribute is present or not.

[rc] Return code; equals `ESMF_SUCCESS` if there are no errors.

58.2.8 ESMF_AttributeGet - Get the Attribute count from an ESMF_AttPack

INTERFACE:

```
! Private name; call using ESMF_AttributeGet()
subroutine ESMF_AttributeGetCount(target, attpack, count, &
                                  attcountflag, attnestflag, rc)
```

ARGUMENTS:

```
type(<object>),             intent(in)              :: target
type(ESMF_AttPack),         intent(inout)           :: attpack
integer,                    intent(inout)           :: count
type(ESMF_AttGetCountFlag), intent(in),    optional :: attcountflag
type(ESMF_AttNest_Flag),    intent(in),    optional :: attnestflag
integer,                    intent(inout), optional :: rc
```

STATUS: **DEPRECATED CLASS!**
The entire ESMF_Attribute class has been deprecated and will be removed in a future ESMF release. This includes all of the class derived types, named constants, and methods. Please use the replacement class `ESMF_Info`, section `41` instead!

DESCRIPTION:

Return the Attribute count for `target`.

Supported values for <object> are:

`ESMF_Array`

`ESMF_ArrayBundle`

`ESMF_CplComp`

`ESMF_GridComp`

`ESMF_SciComp`

`ESMF_DistGrid`

`ESMF_Field`

`ESMF_FieldBundle`

`ESMF_Grid`

`ESMF_State`

`ESMF_LocStream`

`ESMF_Mesh`

The arguments are:

target An `ESMF` object.

attpack A handle to the Attribute package.

count The number of all existing Attributes of the type designated in the *attcountflag*, not just Attribute that have been set.

[attcountflag] The flag to specify which attribute count to return, the default is ESMF_ATTGETCOUNT_ATTRIBUTE. This flag is documented in section 58.1.2.

[attnestflag] A flag to determine whether to descend the Attribute hierarchy when looking for this Attribute, the default is `ESMF_ATTNEST_ON`. This flag is documented in section 55.5.

[rc] Return code; equals `ESMF_SUCCESS` if there are no errors.

58.2.9 ESMF_AttributeGet - Get the Attribute count

INTERFACE:

```
! Private name; call using ESMF_AttributeGet()
subroutine ESMF_AttributeGetCount(target, count, convention, purpose, &
  attcountflag, attnestflag, rc)
```

ARGUMENTS:

```
type(<object>),             intent(in)              :: target
integer,                    intent(inout)           :: count
character (len=*),          intent(in),    optional :: convention
character (len=*),          intent(in),    optional :: purpose
type(ESMF_AttGetCountFlag), intent(in),    optional :: attcountflag
type(ESMF_AttNest_Flag),    intent(in),    optional :: attnestflag
integer,                    intent(inout), optional :: rc
```

STATUS: The following parameters were removed in ESMF version 8.1.0:

- `attPackInstanceName`

STATUS: **DEPRECATED CLASS!**
The entire ESMF_Attribute class has been deprecated and will be removed in a future ESMF release. This includes all of the class derived types, named constants, and methods. Please use the replacement class `ESMF_Info`, section `41` instead!

DESCRIPTION:

Return the Attribute count for `target`.

Supported values for <object> are:

`ESMF_Array`

`ESMF_ArrayBundle`

ESMF_CplComp

ESMF_GridComp

ESMF_SciComp

ESMF_DistGrid

ESMF_Field

ESMF_FieldBundle

ESMF_Grid

ESMF_State

ESMF_LocStream

ESMF_Mesh

The arguments are:

target An ESMF object.

count The number of all existing Attributes of the type designated in the *attcountflag*, not just Attribute that have been set.

[convention] The convention of the Attribute package.

[purpose] The purpose of the Attribute package.

[attcountflag] The flag to specify which attribute count to return, the default is ESMF_ATTGETCOUNT_ATTRIBUTE. This flag is documented in section 58.1.2.

[attnestflag] A flag to determine whether to descend the Attribute hierarchy when looking for this Attribute, the default is ESMF_ATTNEST_ON. This flag is documented in section 55.5.

[rc] Return code; equals ESMF_SUCCESS if there are no errors.

58.2.10 ESMF_AttributeGet - Get Attribute info by name from an ESMF_AttPack

INTERFACE:

```
      ! Private name; call using ESMF_AttributeGet()
      subroutine ESMF_AttributeGetInfoByNamAP(target, name, attpack, &
        attnestflag, typekind, itemCount, isPresent, rc)
```

ARGUMENTS:

```
      type(<object>),           intent(in)              :: target
      character (len = *),      intent(in)              :: name
      type(ESMF_AttPack),       intent(inout)           :: attpack
 -- The following arguments require argument keyword syntax (e.g. rc=rc). --
      type(ESMF_AttNest_Flag),  intent(in),    optional :: attnestflag
```

```
type(ESMF_TypeKind_Flag), intent(out),   optional :: typekind
integer,                  intent(out),   optional :: itemCount
logical,                  intent(out),   optional :: isPresent
integer,                  intent(inout), optional :: rc
```

STATUS: **DEPRECATED CLASS!**
The entire ESMF_Attribute class has been deprecated and will be removed in a future ESMF release. This includes all of the class derived types, named constants, and methods. Please use the replacement class `ESMF_Info`, section `41` instead!

DESCRIPTION:

Return information associated with an Attribute in an Attribute package, including `typekind` and `itemCount`.

Supported values for <object> are:

`ESMF_Array`

`ESMF_ArrayBundle`

`ESMF_CplComp`

`ESMF_GridComp`

`ESMF_SciComp`

`ESMF_DistGrid`

`ESMF_Field`

`ESMF_FieldBundle`

`ESMF_Grid`

`ESMF_State`

`ESMF_LocStream`

`ESMF_Mesh`

The arguments are:

target An `ESMF` object.

name The name of the Attribute to query.

attpack A handle to the Attribute package.

[attnestflag] A flag to determine whether to descend the Attribute hierarchy when looking for this Attribute, the default is `ESMF_ATTNEST_ON`. This flag is documented in section 55.5.

[typekind] The typekind of the Attribute. This flag is documented in section 55.61.

[itemCount] The number of items in this Attribute.

[isPresent] A logical flag to tell if this Attribute is present or not.

[rc] Return code; equals `ESMF_SUCCESS` if there are no errors.

58.2.11 ESMF_AttributeGet - Get Attribute info by name

INTERFACE:

```
! Private name; call using ESMF_AttributeGet()
subroutine ESMF_AttributeGetInfoByNam(target, name, &
  convention, purpose, attnestflag, typekind, itemCount, isPresent, rc)
```

ARGUMENTS:

```
      type(<object>),           intent(in)              :: target
      character (len = *),      intent(in)              :: name
-- The following arguments require argument keyword syntax (e.g. rc=rc). --
      character (len=*),        intent(in),    optional :: convention
      character (len=*),        intent(in),    optional :: purpose
      type(ESMF_AttNest_Flag),  intent(in),    optional :: attnestflag
      type(ESMF_TypeKind_Flag), intent(out),   optional :: typekind
      integer,                  intent(out),   optional :: itemCount
      logical,                  intent(out),   optional :: isPresent
      integer,                  intent(inout), optional :: rc
```

STATUS: The following parameters were removed in ESMF version 8.1.0:

- `attPackInstanceName`

STATUS: **DEPRECATED CLASS!**
The entire ESMF_Attribute class has been deprecated and will be removed in a future ESMF release. This includes all of the class derived types, named constants, and methods. Please use the replacement class `ESMF_Info`, section `41` instead!

DESCRIPTION:

Return information associated with the named Attribute, including `typekind` and `itemCount`.

Supported values for <object> are:

`ESMF_Array`

`ESMF_ArrayBundle`

`ESMF_CplComp`

`ESMF_GridComp`

`ESMF_SciComp`

`ESMF_DistGrid`

`ESMF_Field`

`ESMF_FieldBundle`

`ESMF_Grid`

ESMF_State

ESMF_LocStream

ESMF_Mesh

The arguments are:

target An ESMF object.

name The name of the Attribute to query.

[convention] The convention of the Attribute package.

[purpose] The purpose of the Attribute package.

[attnestflag] A flag to determine whether to descend the Attribute hierarchy when looking for this Attribute, the default is ESMF_ATTNEST_ON. This flag is documented in section 55.5.

[typekind] The typekind of the Attribute. This flag is documented in section 55.61.

[itemCount] The number of items in this Attribute.

[isPresent] A logical flag to tell if this Attribute is present or not.

[rc] Return code; equals ESMF_SUCCESS if there are no errors.

58.2.12 ESMF_AttributeGet - Get Attribute info by index number

INTERFACE:

```
! Private name; call using ESMF_AttributeGet()
subroutine ESMF_AttributeGetInfoByNum(target, attributeIndex, &
  name, convention, purpose, attnestflag, typekind, itemcount, isPresent, &
  rc)
```

ARGUMENTS:

```
type(<object>),           intent(in)              :: target
integer,                  intent(in)              :: attributeIndex
character (len = *),      intent(out)             :: name
character (len = *),      intent(in),    optional :: convention
character (len = *),      intent(in),    optional :: purpose
type(ESMF_AttNest_Flag),  intent(in),    optional :: attnestflag
type(ESMF_TypeKind_Flag), intent(out),   optional :: typekind
integer,                  intent(out),   optional :: itemCount
logical,                  intent(out),   optional :: isPresent
integer,                  intent(inout), optional :: rc
```

STATUS: The following parameters were removed in ESMF version 8.1.0:

- attPackInstanceName

STATUS: **DEPRECATED CLASS!**
The entire ESMF_Attribute class has been deprecated and will be removed in a future ESMF release. This includes all of the class derived types, named constants, and methods. Please use the replacement class `ESMF_Info`, section `41` instead!

DESCRIPTION:

Returns information associated with the indexed Attribute, including `name`, `typekind` and `itemCount`. Keep in mind that these indices start from 1, as expected in a Fortran API.

Supported values for <object> are:

`ESMF_Array`

`ESMF_ArrayBundle`

`ESMF_CplComp`

`ESMF_GridComp`

`ESMF_SciComp`

`ESMF_DistGrid`

`ESMF_Field`

`ESMF_FieldBundle`

`ESMF_Grid`

`ESMF_State`

`ESMF_LocStream`

`ESMF_Mesh`

The arguments are:

target An `ESMF` object.

attributeIndex The index number of the Attribute to query.

name The name of the Attribute.

[convention] The convention of the Attribute package.

[purpose] The purpose of the Attribute package.

[attnestflag] A flag to determine whether to descend the Attribute hierarchy when looking for this Attribute, the default is `ESMF_ATTNEST_ON`. This flag is documented in section 55.5.

[typekind] The typekind of the Attribute. This flag is documented in section 55.61.

[itemCount] The number of items in this Attribute.

[isPresent] A logical flag to tell if this Attribute is present or not.

[rc] Return code; equals `ESMF_SUCCESS` if there are no errors.

58.2.13 ESMF_AttributeGetAttPack - Get an ESMF Attribute package object and/or query for presence

INTERFACE:

```
! Private name; call using ESMF_AttributeGetAttPack()
subroutine ESMF_AttGetAttPack(target, convention, purpose, &
  attpack, attnestflag, isPresent, rc)
```

ARGUMENTS:

```
      type(<object>),          intent(in)                :: target
      character (len = *),     intent(in)                :: convention
      character (len = *),     intent(in)                :: purpose
-- The following arguments require argument keyword syntax (e.g. rc=rc). --
      type(ESMF_AttPack),      intent(inout),  optional :: attpack
      type(ESMF_AttNest_Flag), intent(in),     optional :: attnestflag
      logical,                 intent(out),    optional :: isPresent
      integer,                 intent(out),    optional :: rc
```

STATUS: The following parameters were removed in ESMF version 8.1.0:

- `attPackInstanceName`

STATUS: **DEPRECATED CLASS!**
The entire ESMF_Attribute class has been deprecated and will be removed in a future ESMF release. This includes all of the class derived types, named constants, and methods. Please use the replacement class `ESMF_Info`, section `41` instead!

DESCRIPTION:

Get an ESMF Attribute package object.

Supported values for <object> are:

`ESMF_Array`

`ESMF_ArrayBundle`

`ESMF_CplComp`

`ESMF_GridComp`

`ESMF_SciComp`

`ESMF_DistGrid`

`ESMF_Field`

`ESMF_FieldBundle`

`ESMF_Grid`

`ESMF_State`

ESMF_LocStream

ESMF_Mesh

The arguments are:

<object> An ESMF object.

convention The convention of the Attribute package.

purpose The purpose of the Attribute package.

[attpack] A handle to the Attribute package.

[attnestflag] A flag to determine whether to descend the Attribute hierarchy when searching for this Attribute package, the default is ESMF_ATTNEST_ON. This flag is documented in section 55.5.

[isPresent] A logical flag to tell if this Attribute package is present or not.

[rc] Return code; equals ESMF_SUCCESS if there are no errors.

58.2.14 ESMF_AttributeRemove - Remove an Attribute or Attribute package using an ESMF_AttPack

INTERFACE:

```
      subroutine ESMF_AttributeRemove(target, name, &
        attpack, attnestflag, rc)
```

ARGUMENTS:

```
      type(<object>),          intent(inout)           :: target
 -- The following arguments require argument keyword syntax (e.g. rc=rc). --
      character (len = *),     intent(in),    optional :: name
      type(ESMF_AttPack),      intent(inout), optional :: attpack
      type(ESMF_AttNest_Flag), intent(in),    optional :: attnestflag
      integer,                 intent(inout), optional :: rc
```

STATUS: **DEPRECATED CLASS!**
The entire ESMF_Attribute class has been deprecated and will be removed in a future ESMF release. This includes all of the class derived types, named constants, and methods. Please use the replacement class ESMF_Info, section 41 instead!

DESCRIPTION:

Remove an Attribute, or Attribute package on target.

Supported values for <object> are:

ESMF_Array

ESMF_ArrayBundle

ESMF_CplComp

ESMF_GridComp

ESMF_SciComp

ESMF_DistGrid

ESMF_Field

ESMF_FieldBundle

ESMF_Grid

ESMF_State

ESMF_LocStream

ESMF_Mesh

The arguments are:

target An ESMF object.

[name] The name of the Attribute to remove.

attpack A handle to the Attribute package.

[attnestflag] A flag to determine whether to descend the Attribute hierarchy when searching for this Attribute package, the default is ESMF_ATTNEST_ON. This flag is documented in section 55.5.

[rc] Return code; equals ESMF_SUCCESS if there are no errors.

NOTE: An entire Attribute package can be removed by specifying attpack only, without name. By specifying attpack an Attribute will be removed from the corresponding Attribute package, if it exists. An Attribute can be removed directly from target by specifying name, without attpack.

58.2.15 ESMF_AttributeRemove - Remove an Attribute or Attribute package

INTERFACE:

```
subroutine ESMF_AttributeRemove(target, name, convention, purpose, &
  attnestflag, rc)
```

ARGUMENTS:

```
type(<object>),          intent(inout)           :: target
character (len = *),     intent(in),    optional :: name
character (len = *),     intent(in),    optional :: convention
character (len = *),     intent(in),    optional :: purpose
type(ESMF_AttNest_Flag), intent(in),    optional :: attnestflag
integer,                 intent(inout), optional :: rc
```

STATUS: The following parameters were removed in ESMF version 8.1.0:

- attPackInstanceName

STATUS: **DEPRECATED CLASS!**
The entire ESMF_Attribute class has been deprecated and will be removed in a future ESMF release. This includes all of the class derived types, named constants, and methods. Please use the replacement class ESMF_Info, section 41 instead!

DESCRIPTION:

Remove an Attribute, or Attribute package on target.

Supported values for <object> are:

ESMF_Array

ESMF_ArrayBundle

ESMF_CplComp

ESMF_GridComp

ESMF_SciComp

ESMF_DistGrid

ESMF_Field

ESMF_FieldBundle

ESMF_Grid

ESMF_State

ESMF_LocStream

ESMF_Mesh

The arguments are:

target An ESMF object.

[name] The name of the Attribute to remove.

[convention] The convention of the Attribute package.

[purpose] The purpose of the Attribute package.

[attnestflag] A flag to determine whether to descend the Attribute hierarchy when searching for this Attribute package, the default is ESMF_ATTNEST_ON. This flag is documented in section 55.5.

[rc] Return code; equals ESMF_SUCCESS if there are no errors.

NOTE: An entire Attribute package can be removed by specifying convention, purpose, and attPackInstanceName only, without name. An Attribute can be removed directly from <object> by specifying name, without convention, purpose, and attPackInstanceName.

58.2.16 ESMF_AttributeSet - Set an Attribute in an ESMF_AttPack

INTERFACE:

```
subroutine ESMF_AttributeSet(target, name, <value>, attpack, &
  itemcount, attnestflag, rc)
```

ARGUMENTS:

```
      type(<object>),          intent(in)              :: target
      character (len = *),     intent(in)              :: name
      <value>, see below for supported values
      type(ESMF_AttPack),      intent(inout)           :: attpack
-- The following arguments require argument keyword syntax (e.g. rc=rc). --
      integer,                 intent(in),    optional :: itemcount
      type(ESMF_AttNest_Flag), intent(in),    optional :: attnestflag
      integer,                 intent(inout), optional :: rc
```

STATUS: **DEPRECATED CLASS!**
The entire ESMF_Attribute class has been deprecated and will be removed in a future ESMF release. This includes all of the class derived types, named constants, and methods. Please use the replacement class `ESMF_Info`, section `41` instead!

DESCRIPTION:

Attach an Attribute to `target`, or set an Attribute in an Attribute package. The Attribute has a `name` and `value`, and, if in an Attribute package, a `attpack`.

The `itemcount` and `attnestflag` are NOOP. The `target` is a NOOP if the `attpack` is used.

Supported values for <object> are:

`ESMF_Array`

`ESMF_ArrayBundle`

`ESMF_CplComp`

`ESMF_GridComp`

`ESMF_SciComp`

`ESMF_DistGrid`

`ESMF_Field`

`ESMF_FieldBundle`

`ESMF_Grid`

`ESMF_State`

`ESMF_LocStream`

`ESMF_Mesh`

Supported types for <value> and <defaultvalue> are:

```
integer(ESMF_KIND_I4), intent(out)
integer(ESMF_KIND_I8), intent(out)
real (ESMF_KIND_R4), intent(out)
real (ESMF_KIND_R8), intent(out)
logical, intent(out)
character (len = *), intent(out)
```

The arguments are:

target An `ESMF` object.

name The name of the Attribute to set.

<value> The value of the Attribute to set.

attpack A handle to the Attribute package.

[itemcount] This parameter is only included for backward compatibility, it is NOOP.

[attnestflag] This parameter is only included for backward compatibility, it is NOOP.

[rc] Return code; equals `ESMF_SUCCESS` if there are no errors.

58.2.17 ESMF_AttributeSet - Set an Attribute in an ESMF_AttPack

INTERFACE:

```
      subroutine ESMF_AttributeSet(target, name, <valueList>, attpack, &
        itemCount,  attnestflag, rc)
```

ARGUMENTS:

```
      type(<object>),          intent(in)              :: target
      character (len = *),     intent(in)              :: name
      <valueList>, see below for supported values
      type(ESMF_AttPack),      intent(inout)           :: attpack
-- The following arguments require argument keyword syntax (e.g. rc=rc). --
      integer,                 intent(in),    optional :: itemcount
      type(ESMF_AttNest_Flag), intent(in),    optional :: attnestflag
      integer,                 intent(inout), optional :: rc
```

STATUS: **DEPRECATED CLASS!**
The entire ESMF_Attribute class has been deprecated and will be removed in a future ESMF release. This includes all of the class derived types, named constants, and methods. Please use the replacement class `ESMF_Info`, section

41 instead!

DESCRIPTION:

Attach an Attribute to target, or set an Attribute in an Attribute package. The Attribute has a name and a valueList, with an itemCount, and, if in an Attribute package, a attpack.

The itemcount and attnestflag are NOOP. The target is a NOOP if the attpack is used.

Supported values for <object> are:

```
ESMF_Array
ESMF_ArrayBundle
ESMF_CplComp
ESMF_GridComp
ESMF_SciComp
ESMF_DistGrid
ESMF_Field
ESMF_FieldBundle
ESMF_Grid
ESMF_State
ESMF_LocStream
ESMF_Mesh
```

Supported types for <valueList> and <defaultvalueList> are:

```
integer(ESMF_KIND_I4), intent(out), dimension(:)
integer(ESMF_KIND_I8), intent(out), dimension(:)
real(ESMF_KIND_R4), intent(out), dimension(:)
real(ESMF_KIND_R8), intent(out), dimension(:)
logical, intent(out), dimension(:)
character(len=*), intent(out), dimension(:)
```

The arguments are:

target An ESMF object.

name The name of the Attribute to set.

<valueList> The valueList of the Attribute to set.

attpack A handle to the Attribute package.

[itemcount] This parameter is only included for backward compatibility, it is NOOP.

[attnestflag] This parameter is only included for backward compatibility, it is NOOP.

[rc] Return code; equals `ESMF_SUCCESS` if there are no errors.

58.2.18 ESMF_AttributeSet - Set an Attribute

INTERFACE:

```
subroutine ESMF_AttributeSet(target, name, <value>, &
  convention, purpose, itemcount, attnestflag, rc)
```

ARGUMENTS:

```
type(<object>),          intent(inout)           :: target
character (len = *),     intent(in)              :: name
<value>, see below for supported values
character (len = *),     intent(in),    optional :: convention
character (len = *),     intent(in),    optional :: purpose
integer,                 intent(in),    optional :: itemcount
type(ESMF_AttNest_Flag), intent(in),    optional :: attnestflag
integer,                 intent(inout), optional :: rc
```

STATUS: The following parameters were removed in ESMF version 8.1.0:

- `attPackInstanceName`

STATUS: **DEPRECATED CLASS!**
The entire ESMF_Attribute class has been deprecated and will be removed in a future ESMF release. This includes all of the class derived types, named constants, and methods. Please use the replacement class `ESMF_Info`, section `41` instead!

DESCRIPTION:

Attach an Attribute to `target`, or set an Attribute in an Attribute package. The Attribute has a `name` and `value`, and, if in an Attribute package, `convention` and `purpose`.

The `itemcount` and `attnestflag` are NOOP.

Supported values for <object> are:

`ESMF_Array`

`ESMF_ArrayBundle`

`ESMF_CplComp`

`ESMF_GridComp`

`ESMF_SciComp`

`ESMF_DistGrid`

```
ESMF_Field
ESMF_FieldBundle
ESMF_Grid
ESMF_State
ESMF_LocStream
ESMF_Mesh
```

Supported types for <value> and <defaultvalue> are:

```
integer(ESMF_KIND_I4), intent(out)
integer(ESMF_KIND_I8), intent(out)
real (ESMF_KIND_R4), intent(out)
real (ESMF_KIND_R8), intent(out)
logical, intent(out)
character (len = *), intent(out)
```

The arguments are:

target An `ESMF` object.

name The name of the Attribute to set.

<value argument> The value of the Attribute to set.

[convention] The convention of the Attribute package.

[purpose] The purpose of the Attribute package.

[itemcount] This parameter is only included for backward compatibility, it is NOOP.

[attnestflag] This parameter is only included for backward compatibility, it is NOOP.

[rc] Return code; equals `ESMF_SUCCESS` if there are no errors.

58.2.19 ESMF_AttributeSet - Set an Attribute

INTERFACE:

```
subroutine ESMF_AttributeSet(target, name, <valueList>, &
  convention, purpose, itemCount, attnestflag, rc)
```

ARGUMENTS:

```
type(<object>),          intent(inout)           :: target
character (len = *),     intent(in)              :: name
<valueList>, see below for supported values
character (len = *),     intent(in),    optional :: convention
character (len = *),     intent(in),    optional :: purpose
integer,                 intent(in),    optional :: itemcount
type(ESMF_AttNest_Flag), intent(in),    optional :: attnestflag
integer,                 intent(inout), optional :: rc
```

STATUS: The following parameters were removed in ESMF version 8.1.0:

- `attPackInstanceName`

STATUS: **DEPRECATED CLASS!**
The entire ESMF_Attribute class has been deprecated and will be removed in a future ESMF release. This includes all of the class derived types, named constants, and methods. Please use the replacement class `ESMF_Info`, section `41` instead!

DESCRIPTION:

Attach an Attribute to `target`, or set an Attribute in an Attribute package. The Attribute has a `name` and a `valueList`, with an `itemCount`, and, if in an Attribute package, `convention` and `purpose`.

The `itemcount` and `attnestflag` are NOOP.

Supported values for <object> are:

```
ESMF_Array
ESMF_ArrayBundle
ESMF_CplComp
ESMF_GridComp
ESMF_SciComp
ESMF_DistGrid
ESMF_Field
ESMF_FieldBundle
ESMF_Grid
ESMF_State
ESMF_LocStream
ESMF_Mesh
```

Supported types for <valueList> and <defaultvalueList> are:

```
integer(ESMF_KIND_I4), intent(out), dimension(:)
integer(ESMF_KIND_I8), intent(out), dimension(:)
```

```
real(ESMF_KIND_R4), intent(out), dimension(:)
real(ESMF_KIND_R8), intent(out), dimension(:)
logical, intent(out), dimension(:)
character(len=*), intent(out), dimension(:)
```

The arguments are:

target An `ESMF` object.

name The name of the Attribute to set.

<valueList> The valueList of the Attribute to set.

[convention] The convention of the Attribute package.

[purpose] The purpose of the Attribute package.

[itemcount] This parameter is only included for backward compatibility, it is NOOP.

[attnestflag] This parameter is only included for backward compatibility, it is NOOP.

[rc] Return code; equals `ESMF_SUCCESS` if there are no errors.

58.2.20 ESMF_AttributeUpdate - Update an Attribute hierarchy

INTERFACE:

```
subroutine ESMF_AttributeUpdate(target, vm, rootList, rc)
```

ARGUMENTS:

```
<target>, see below for supported values
type(ESMF_VM), intent(in)            :: vm
integer,       intent(in)            :: rootList(:)
integer,       intent(out), optional :: rc
```

STATUS: The following parameters were removed in ESMF version 8.1.0:

- `reconcile`

STATUS: **DEPRECATED CLASS!**
The entire ESMF_Attribute class has been deprecated and will be removed in a future ESMF release. This includes all of the class derived types, named constants, and methods. Please use the replacement class `ESMF_Info`, section `41` instead!

DESCRIPTION:

Update an Attribute hierarchy during runtime. The information from the PETs in the `rootList` is transferred to the PETs that are not in the `rootList`. Care should be taken to ensure that the information contained in the Attributes on the PETs in the `rootList` is consistent.

Supported values for <object> are:

`ESMF_State`

`ESMF_CplComp`

`ESMF_GridComp`

`ESMF_SciComp`

`ESMF_Field`

`ESMF_FieldBundle`

The arguments are:

target An `ESMF` object.

vm The virtual machine over which this Attribute hierarchy should be updated.

rootList The list of PETs that are to be used as the source of the update.

[rc] Return code; equals `ESMF_SUCCESS` if there are no errors.